

TECO service

CATALOGO
PEZZI DI RICAMBIO 2019

DAL 1921
windhager
CALORE E FUTURO

L'affidabilità è... TECO Service!

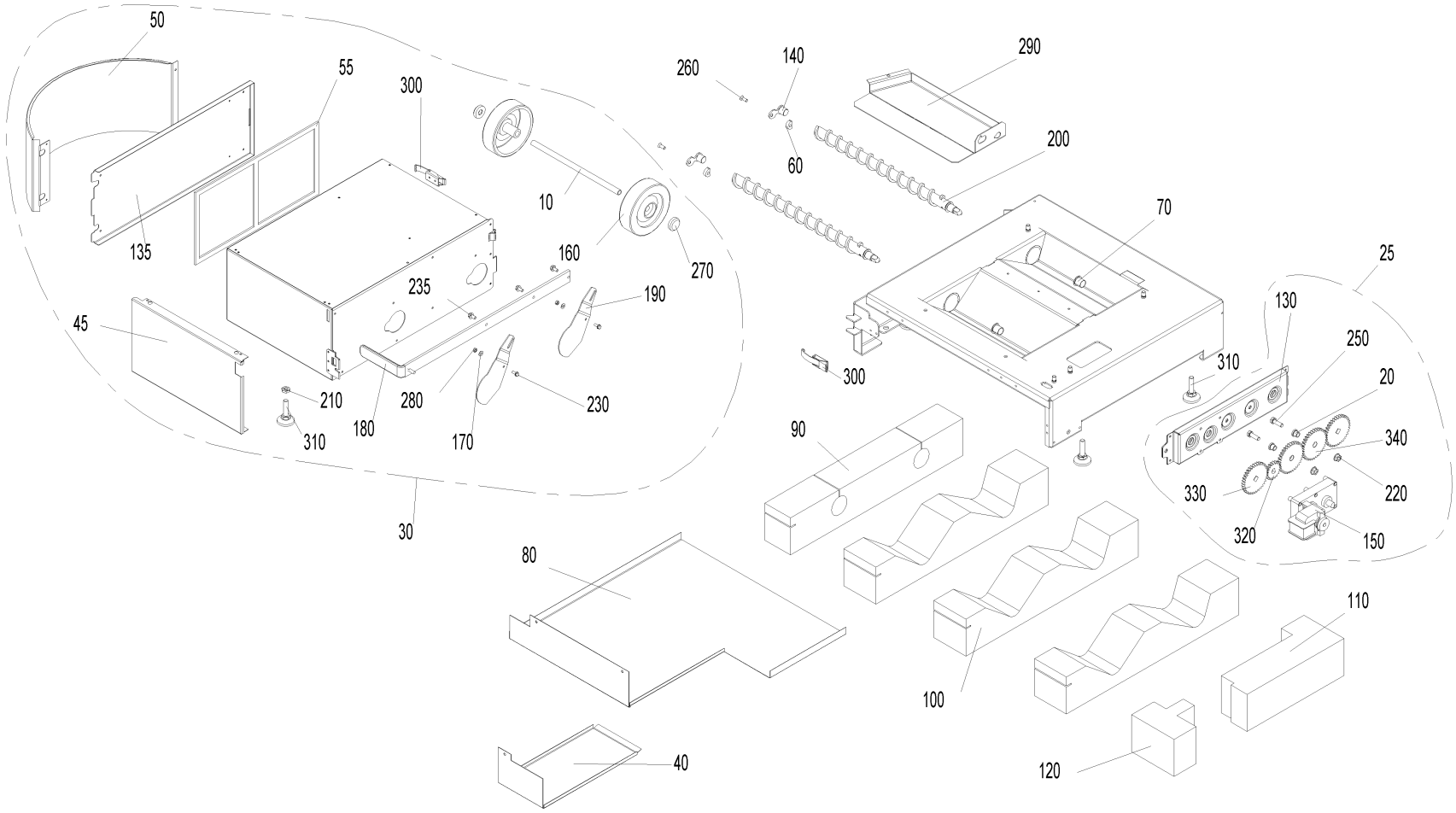
50
55
300
135
10
160
270
235
190
45
210
310
180
280
170
230
30
260
140
290
60
200
70
300
310
25
130
250
20
340
330
220
320
150
90
80
100
110
40
120

Item no.	Article no.	Description	Serialnumber from	Serialnumber to
10	051379	Ash box axle	0	99999999999999999
20	006745	Ash conveyor bearing bush	0	99999999999999999
25	054418	Ash removal, completely pre- mounted, BioWIN2	0	99999999999999999
30	051262	BIO90 Ash box, cpl	0	99999999999999999
40	051125	Cover for ash conveyor motor	0	99999999999999999
45	051633	Ash box lid	0	99999999999999999
50	051637	Ash box lid curve	0	99999999999999999
55	046665	Container seal	0	99999999999999999
60	048573	Distance	0	99999999999999999
70	012508	Friction bearing with connector	0	99999999999999999
80	051124	Cup insulation	0	99999999999999999
90	051126	Ash pipe insulation	0	99999999999999999
100	051127	Ash chamfer insulation	0	99999999999999999
110	051128	Motor insulation, rear	0	99999999999999999
120	051129	Motor insulation, front	0	99999999999999999
130	048572	Ash conveyor bracket	0	99999999999999999
135	051635	Ash box flap	0	99999999999999999
140	051120	Auger bearing	0	99999999999999999
150	044665	Motor	0	99999999999999999
160	006888	Wheel AG 125-12	0	99999999999999999
170	018309	Disc 5 DIN134	0	99999999999999999
180	051389	Ash box scraper	0	99999999999999999
190	050686	Sliding plate	0	99999999999999999
200	051542	Auger	0	99999999999999999
210	031156	Hexagon nut M10 DIN 439	0	99999999999999999
220	016553	Hexagon nut M8 with flange and gearing	0	99999999999999999
230	031545	Hexagon screw M5x12 DIN 7500 (not ilustrated)	0	99999999999999999
235	031549	Hexagon screw M6x12 DIN 7500	0	99999999999999999
240	017086	Hexagon screw M8x20 DIN 933 (not illustrated)	0	99999999999999999
250	017191	Hexagon screw M8x25 DIN 933	0	99999999999999999
260	016863	Countersinking screw M6x16	0	99999999999999999
270	006889	Washer Ø12	0	99999999999999999
280	016727	Lock nut M5	0	99999999999999999
290	050692	Ash box base	0	99999999999999999
300	009546	Spring lock	0	99999999999999999
310	009990	Leg M10 x 40	0	99999999999999999
320	047543	Spur gear M2 Z20	0	99999999999999999
330	050869	Spur gear M2 Z36	0	99999999999999999
340	048566	Spur gear M2 Z36 Ø12	0	99999999999999999

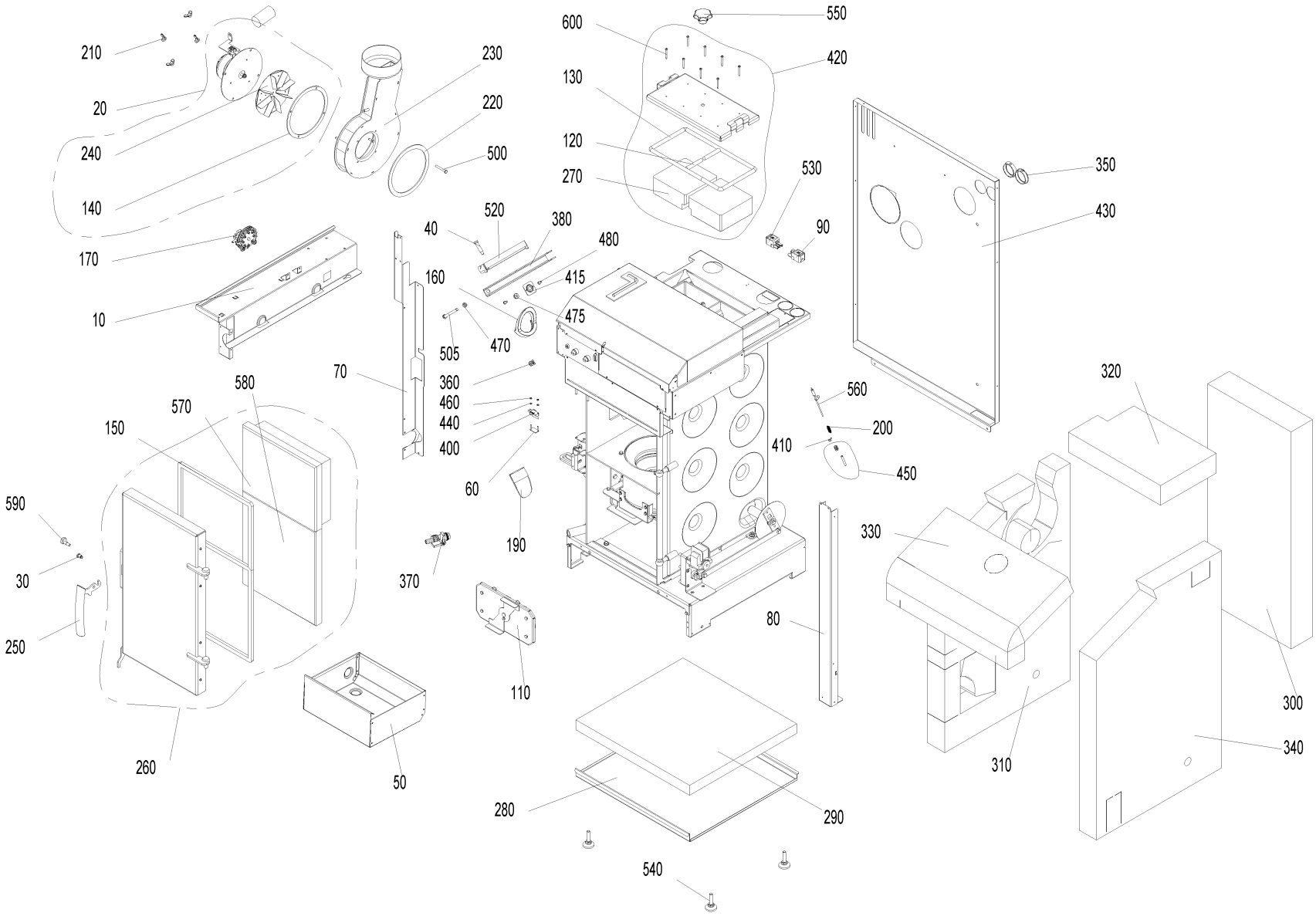
210
20
240
140
170
10
230
220
500
520
40
380
480
160
415
475
505
470
70
360
460
440
400
60
190
370
580
570
150
590
30
250
260
50
110
600
550
420
130
120
270
530
90
350
430
560
200
410
450
320
330
80
310
300
340
280
290
540

Item no.	Article no.	Description	Serialnumber from	Serialnumber to
10	050918	Cover plate	0	99999999999999999
20	053010	Flue gas blower	0	99999999999999999
30	048881	Axle for door handle CK45	0	99999999999999999
40	013813	Collar screw	0	99999999999999999
50	048928	Ash pan	0	99999999999999999
60	051045	Fastened microswitch, complete	0	99999999999999999
70	051109	Cover, left	0	99999999999999999
80	048609	Cover, right	0	99999999999999999
90	070324	Socket, 3-pin, black	0	99999999999999999
110	051056	Coasting surface cover, complete	0	99999999999999999
120	051040	Sealing cord, short	0	99999999999999999
120	051041	Sealing cord, short	0	99999999999999999
130	051017	Sealing cord for cleaning cover	0	99999999999999999
130	051034	Sealing cord for cleaning cover	0	99999999999999999
140	051006	Blower box seal	0	99999999999999999
150	048916	Heating door seal	0	99999999999999999
160	048926	Auger tube seal	0	99999999999999999
170	045404	Differential pressure watchdog	0	99999999999999999
190	048921	Down chute	0	99999999999999999
200	050647	Combustion chamber sensor spring	0	99999999999999999
210	019410	Wing nut M6	0	99999999999999999
220	051005	Blower seal	0	99999999999999999
230	053234	Blower box for BioWIN102-262	0	99999999999999999
240	052951	Blower wheel Ø160 x 25 for BioWIN2 102 - 262	0	99999999999999999
250	007480	Boiler handle	0	99999999999999999
260	051545	Heating door cpl. mounted	0	99999999999999999
270	050636	Insulating stone for cleaning cover	0	99999999999999999
270	051007	Insulating stone for cleaning cover	0	99999999999999999
280	048863	Cup insulation 10-26 K BW2	0	99999999999999999
290	048864	Floor insulation	0	99999999999999999
300	051116	Rear insulation	0	99999999999999999
310	051119	Left insulation	0	99999999999999999
320	048910	Coasting surface insulation	0	99999999999999999
330	048911	Top insulation	0	99999999999999999
340	050924	Right insulation	0	99999999999999999
350	004096	Cable feed-through 2400 black Ø50	0	99999999999999999
360	051112	Cage nut M8	0	99999999999999999
370	004385	KFE cock	0	99999999999999999
380	048611	Pellet container clamp	0	99999999999999999
400	007632	Microswitch with lever	0	99999999999999999
410	031274	Eyelet M6	0	99999999999999999
415	052484	Platelet flanged nut	0	99999999999999999
420	048870	Cleaning cover, complete	0	99999999999999999
420	050477	Cleaning cover, complete	0	99999999999999999
430	050916	Rear wall	0	99999999999999999
440	021474	Disc 3 DIN134	0	99999999999999999
450	051069	Protective tube for combustion chamber sensor, complete	0	99999999999999999
460	016551	Hexagon nut M3 DIN 934	0	99999999999999999
470	015992	Nut M8 DIN 934 V2 - LogWIN Klassik pellet ready	0	99999999999999999
475	016553	Hexagon nut M8 with flange and gearing	0	99999999999999999
480	031545	Hexagon screw M5x12 DIN 7500 (not ilustrated)	0	99999999999999999

Item no.	Article no.	Description	Serialnumber from	Serialnumber to
500	021504	Hexagon screw M6x45 DIN933	0	99999999999999999
505	016461	Hexagon screw M8x80 DIN 933	0	99999999999999999
520	048975	Clamping rail	0	99999999999999999
530	070323	Plug, 3-pin, black	0	99999999999999999
540	009990	Leg M10 x 40	0	99999999999999999
550	005125	Star handle M12 x 35	0	99999999999999999
560	007626	Thermocouple	0	99999999999999999
570	048914	Door stone	0	99999999999999999
580	050447	Bottom door stone	0	99999999999999999
590	051004	Locking pin	0	99999999999999999
600	016719	Cylinder drilling screw 4.2 x 38 DIN7504	0	99999999999999999

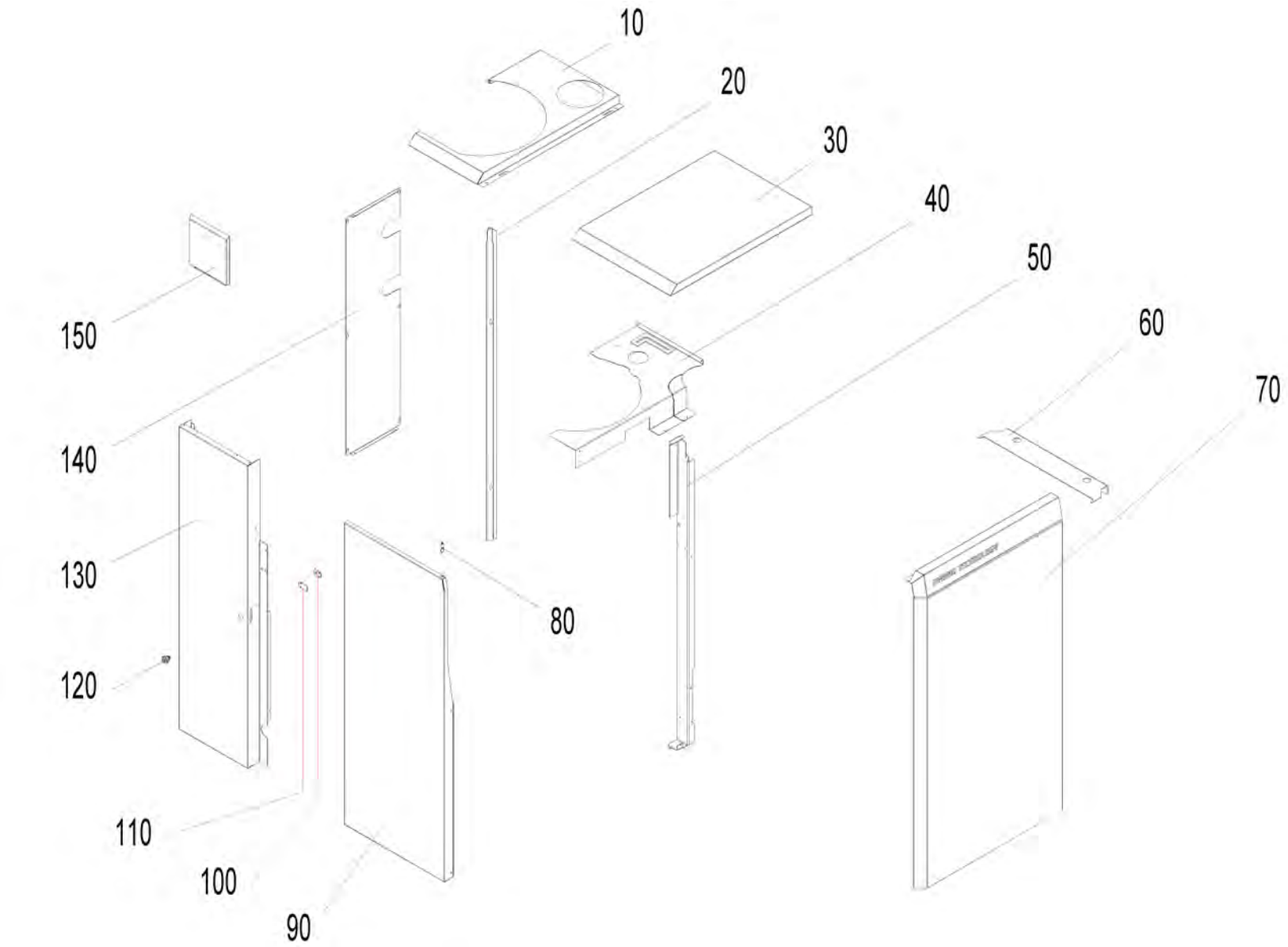
10
20
30
40
50
60
70
80
90
100
110
120
130
140
150

Item no.	Article no.	Description	Serialnumber from	Serialnumber to
10	051901	Cover pellets storage side for BioWin2-DuoWin	0	99999999999999999
20	051883	Angle profile rear panel for BioWin2-DuoWin	0	99999999999999999
30	051875	Cover boiler side BioWin2-DuoWin	0	99999999999999999
40	051903	Cover plate control panel for BioWin2-DuoWin	0	99999999999999999
50	051877	Door hinge bracket for BioWin2-DuoWin	0	99999999999999999
60	051872	Angle profile for positioning BioWin2-DuoWin	0	99999999999999999
70	051902	Front panel BioWIN2 - DuoWIN	0	99999999999999999
80	007191	Locking bolt with pull ring GN 717-5-M8-A-ST	0	99999999999999999
90	051899	Cladding door for BioWIN2 - DuoWIN	0	99999999999999999
100	047891	Driver	0	99999999999999999
110	051882	Locking plate for BioWIN2 - DuoWIN	0	99999999999999999
120	012256	Turning bolt	0	99999999999999999
130	051900	Rear left side panel for BioWIN2 - DuoWIN	0	99999999999999999
140	051884	Rear panel for BioWIN2 - DuoWIN	0	99999999999999999
150	051886	Pellet container cover for BioWin2-DuoWin	0	99999999999999999
160	504048	Flue connection DuoWin for pellet boiler	0	99999999999999999

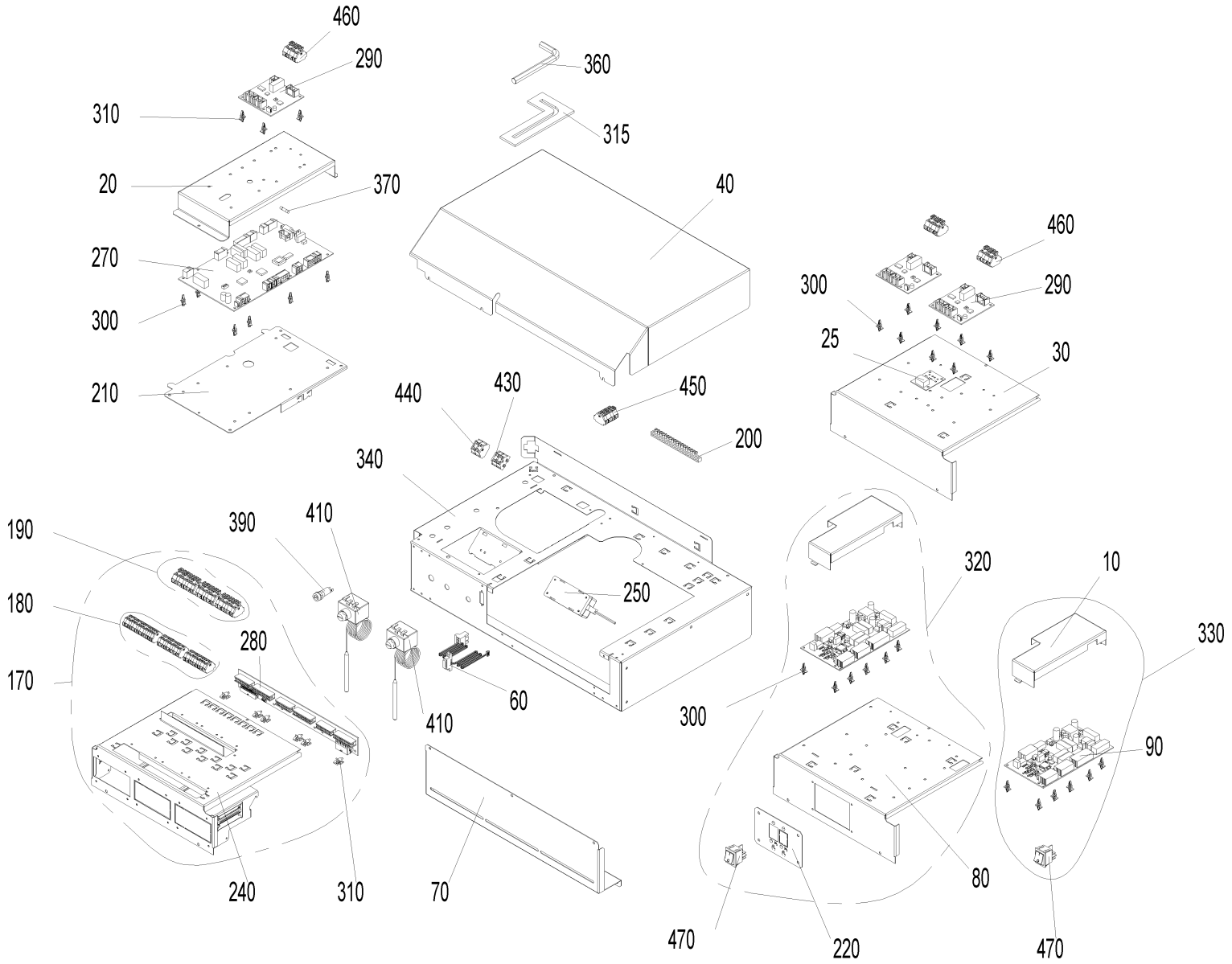
460
290
310
20
370
270
300
210
360
315
40
460
300
290
25
30
440
430
450
200
340
250
190
180
170
390
410
280
60
410
240
310
70
320
10
330
300
90
80
470
220
470

Item no.	Article no.	Description	Serialnumber from	Serialnumber to
10	048750	BUML TTL 2Z cover	0	99999999999999999
20	048955	PCB cover	0	99999999999999999
25	012012	LON connection diagram	0	99999999999999999
30	051382	REG000BW2 External control system cover	0	99999999999999999
40	048618	Control panel cover	0	99999999999999999
60	050970	Ribbon cable, Lon	0	99999999999999999
70	048902	Retaining plate	0	99999999999999999
80	048613	Retaining bracket, REG	0	99999999999999999
90	009767	BUML TTL 2Z interface	0	99999999999999999
100	002059	Power supply cable (not illustrated)	0	99999999999999999
110	050971	Power supply cable OT (not illustrated)	0	99999999999999999
120	043586	Draught fan cable (not illustrated)	0	99999999999999999
130	003719	TTL cable (not illustrated)	0	99999999999999999
140	040333	Wiring harness 12 V (not illustrated)	0	99999999999999999
150	040335	Wiring harness 230 V (not illustrated)	0	99999999999999999
160	040334	Wiring harness AAT HFR (not illustrated)	0	99999999999999999
170	050910	MESBW2 Cable harness	0	99999999999999999
180	051415	Cable harness MES extra-low voltage 12 V	0	99999999999999999
190	051414	Cable harness MES low voltage 230 V	0	99999999999999999
200	009928	Terminal bar	0	99999999999999999
210	050959	Bracket fireing automat	0	99999999999999999
220	048952	Rocker switch bracket	0	99999999999999999
230	018190	Oval-head screw 3.2x16 (not illustrated)	0	99999999999999999
240	051390	Module guide complete	0	99999999999999999
250	051645	Power supply unit 12V	0	99999999999999999
260	005784	Pin connector (not illustrated)	0	99999999999999999
270	011990	PCB, FMP BW2	0	99999999999999999
280	050996	MES PCB	0	99999999999999999
290	011994	PCB board, FMO-J	0	99999999999999999
300	007609	PCB holder	0	99999999999999999
310	007549	PCB holder, Richco	0	99999999999999999
315	051766	Position hexagon pin screwdriver	0	99999999999999999
320	050912	REG 021	0	99999999999999999
330	050913	REG 024	0	99999999999999999
340	048605	Control panel, floor	0	99999999999999999
360	027391	Hexagon pin screwdriver 10 mm DIN 911	0	99999999999999999
370	006900	Fuse 1 A T 5x20 ceramic tube	0	99999999999999999
380	003228	6.3A fuse (not illustrated)	0	99999999999999999
390	003663	Fuse holder	0	99999999999999999
400	007629	Immersion sensor PT 1000 (not illustrated)	0	99999999999999999
405	502186	MES009M Immersion sensor	0	99999999999999999
410	005672	Thermostat LS1+100-6U	0	99999999999999999
415	003208	Grommet 10x17.5x1.2	0	99999999999999999
430	006833	Wago terminal block 261; 4-pin "12V GND"	0	99999999999999999
440	006834	Wago terminal block 261; 4-pin "safety 1-4"	0	99999999999999999
450	007656	Wago terminal block 261; 6-pin	0	99999999999999999
460	010047	Wago terminal block 261; 6-pin extra PCB	0	99999999999999999
470	005563	Rocker switch SW/GR 0-1	0	99999999999999999
480	018140	Cylinder screw 4.2x13 DIN7981ST (not illustrated)	0	99999999999999999

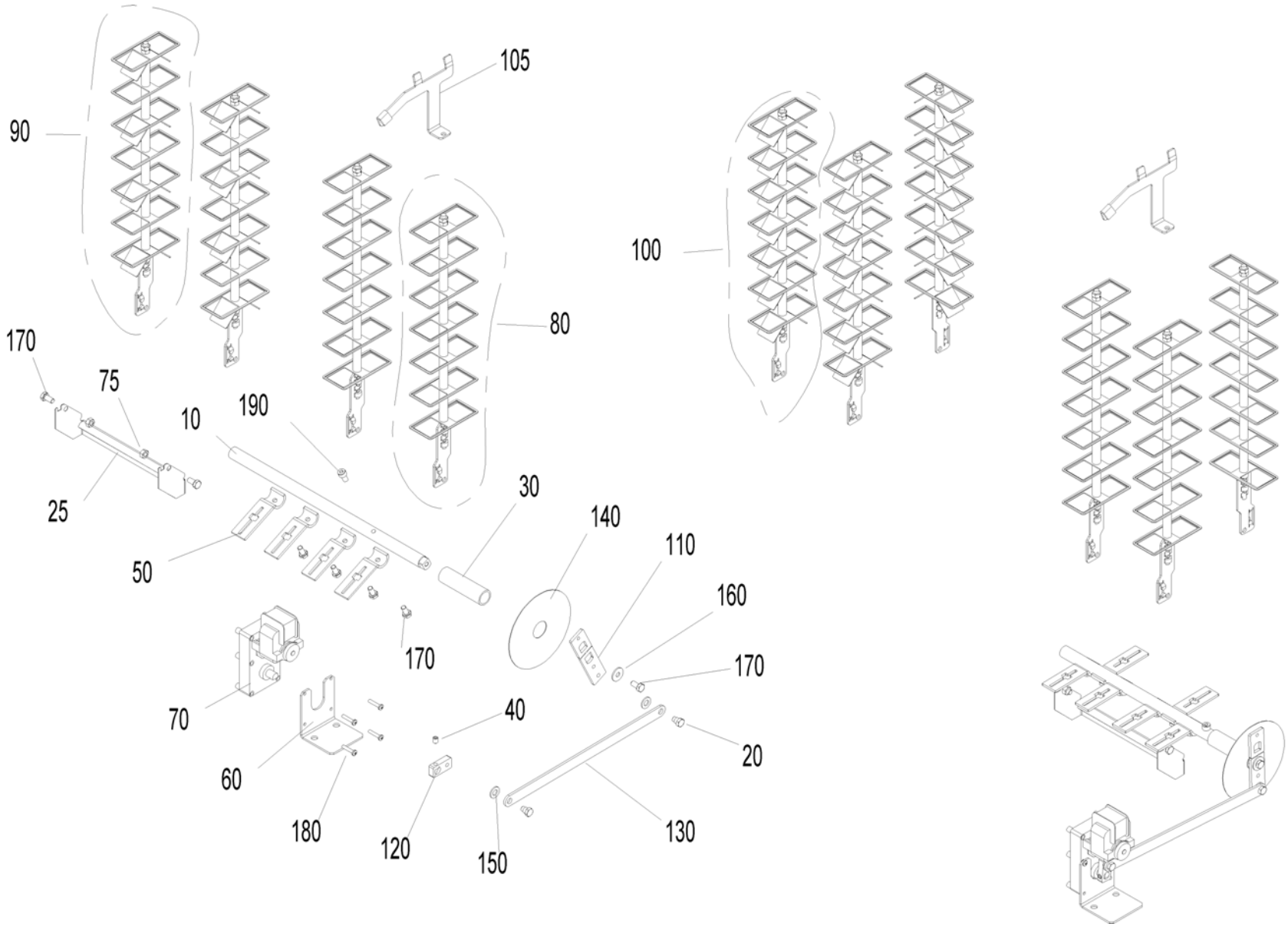
90
105
80
100
170
75
10
190
25
50
30
140
110
160
170
170
70
40
20
60
180
120
150
130

Item no.	Article no.	Description	Serialnumber from	Serialnumber to
10	048882	Axle heating surface BW2 10-26	0	99999999999999999
20	012502	Collar screw	0	99999999999999999
25	051624	Ash sheet	0	99999999999999999
30	048980	Distance rod	0	99999999999999999
40	033112	Setscrew M8x10 DIN916	0	99999999999999999
50	051547	Lever for cleaning heating surfaces	0	99999999999999999
60	051121	L-bracket, motor HFR	0	99999999999999999
70	044665	Motor	0	99999999999999999
75	015992	Nut M8 DIN 934 V2 - LogWIN Klassik pellet ready	0	99999999999999999
80	051609	Clearer flat	0	99999999999999999
90	051610	Clearer flat with turbulator	0	99999999999999999
100	051611	Clearer flat with turbulator	0	99999999999999999
105	051076	Cleaning plate for combustion chamber	0	99999999999999999
110	048884	Shaker lever 1	0	99999999999999999
120	048885	Shaker lever 2	0	99999999999999999
130	051367	Shaker lever 3	0	99999999999999999
140	051122	Disc	0	99999999999999999
150	024780	Disc 10 ISO7089	0	99999999999999999
160	031755	Disc 8 ISO 7093	0	99999999999999999
170	016721	Hexagon screw M8x16 DIN 933	0	99999999999999999
180	016837	Cylinder screw M5x25 ISO 7045	0	99999999999999999
190	016773	Cylinder screw M8x16 ISO 4762	0	99999999999999999

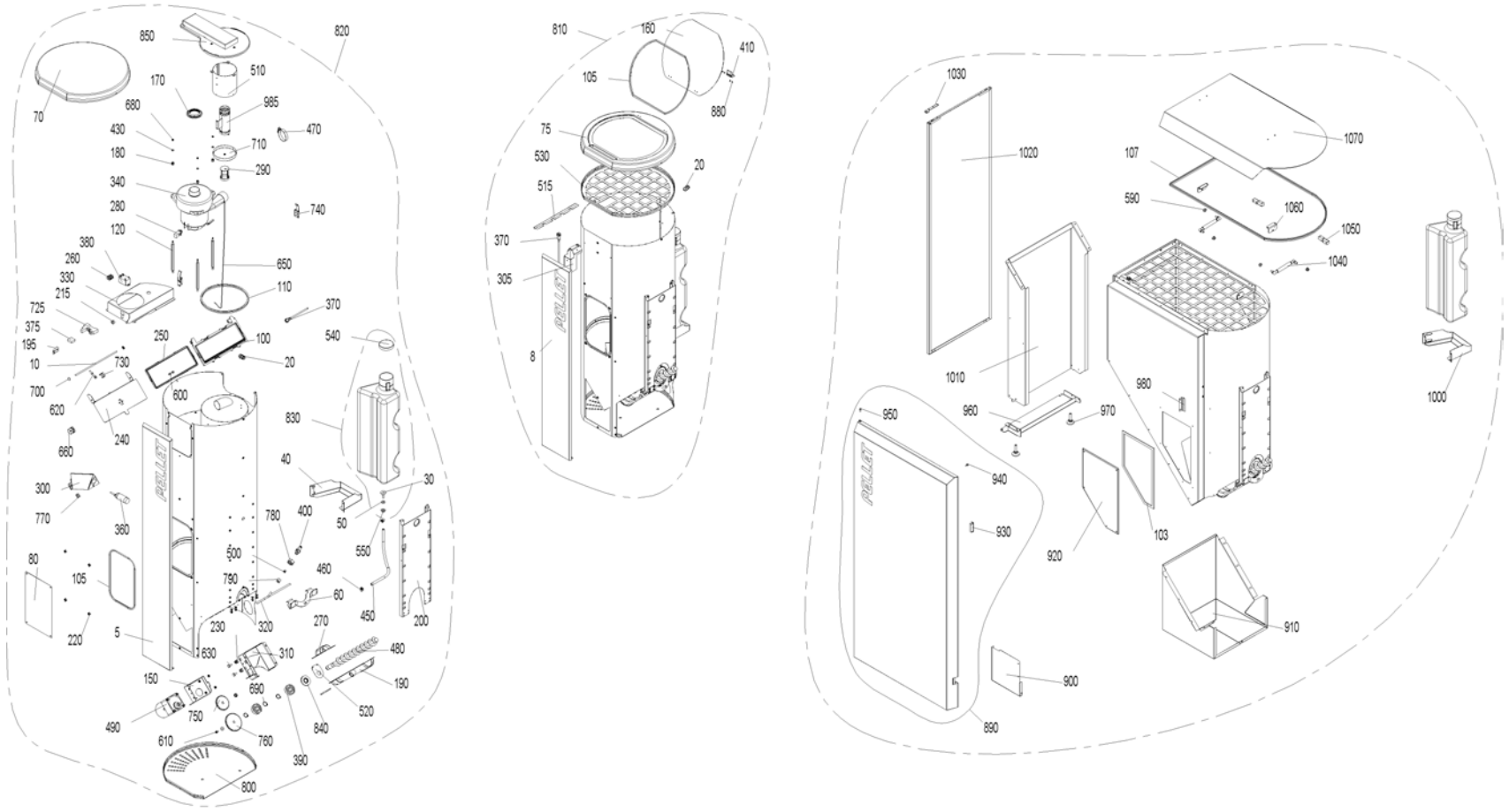
850
820
70
510
170
985
680
470
430
710
180
290
340
740
280
120
380
650
260
330
110
215
370
725
375
250
100
540
195
730
20
10
700
600
620
240
830
660
40
30
300
400
50
770
360
780
550
80
500
460
105
790
60
450
200
220
5
230
320
270
480
630
310
150
190
690
520
490
750
840
610
760
390
800
810
160
410
105
880
75
530
20
515
370
305
8
1030
1020
107
1070
590
1060
1050
1040
1010
980
960
970
1000
950
940
930
920
103
910
900
890

Item no.	Article no.	Description	Serialnumber from	Serialnumber to
5	051749	PB cover plate, grey	0	99999999999999999
8	051758	PB Klassik cover plate, grey	0	99999999999999999
10	042452	Feed axle	0	99999999999999999
20	006340	Mount connections PG9	0	99999999999999999
30	006877	Water connection	0	99999999999999999
40	051107	Water tank support	0	99999999999999999
50	006851	Support plate, motor	0	99999999999999999
60	048974	Fastening bracket	0	99999999999999999
70	050884	Pellet container cover	0	99999999999999999
75	051000	Pellet container cover Klassik	0	99999999999999999
80	050868	Cover reserve supply	0	99999999999999999
100	031254	Seal frame	0	99999999999999999
103	046665	Container seal	0	99999999999999999
105	053465	Reserve supply container seal	0	99999999999999999
107	053467	Seal profile reserve supply container 200 kg	0	99999999999999999
110	042232	Seal section	0	99999999999999999
120	031256	Distance bolt	0	99999999999999999
130	051386	Cheese head screw M5x10 Taptite	0	99999999999999999
140	051387	Cheese head screw M5x10 Taptite, grey	0	99999999999999999
150	051114	Flange, auger motor	0	99999999999999999
160	051001	Filling cover	0	99999999999999999
170	031253	Blower seal	0	99999999999999999
180	009559	Rubber grommet DK 6-9-12-7	0	99999999999999999
190	053540	Half-collar auger tube	0	99999999999999999
195	005077	Bracket	0	99999999999999999
200	048976	Retaining bracket, pellet tank	0	99999999999999999
210	045048	Cable feed with relay	0	99999999999999999
215	009542	Cable feed-through	0	99999999999999999
220	051388	Cage nut M5	0	99999999999999999
230	051112	Cage nut M8	0	99999999999999999
240	045955	Receptacle flap	0	99999999999999999
250	031257	Flap seal	0	99999999999999999
260	000965	Terminal, 3-pin	0	99999999999999999
270	048967	Clamp collar	0	99999999999999999
280	006859	Carbon brushes for blower motor	0	99999999999999999
290	042035	Piston	0	99999999999999999
300	048970	Proximity switch bracket	0	99999999999999999
305	051786	Proximity switch bracket lid	0	99999999999999999
310	048891	Auger motor bracket	0	99999999999999999
320	050867	Back-burn safeguard lead	0	99999999999999999
330	050866	Air duct	0	99999999999999999
340	044667	Blower motor 122151-12 for feed Conversion instructions for use with PMX 15-26 are enclosed! for BioWIN 10-26, PMX,BioWIN XL 35-6	0	99999999999999999
360	006821	Proximity switch, capacitive	0	99999999999999999
370	006832	Proximity switch M12, inductive	0	99999999999999999
375	005026	OKE9281 Cable protection plate	0	99999999999999999
380	005067	BW2 Relay 30A 250V	0	99999999999999999
390	012499	Grooved ball bearing	0	99999999999999999
400	042510	Burn-back protection completely assembled for PMX, BioWIN 10-26	0	99999999999999999
410	050990	Hinge M345	0	99999999999999999
420	018058	U-washer	0	99999999999999999
430	018309	Disc 5 DIN134	0	99999999999999999

Item no.	Article no.	Description	Serialnumber from	Serialnumber to
440	031753	Disc 6 ISO 7093	0	99999999999999999
450	008915	Hose 7x2	0	99999999999999999
460	006874	Hose clip ABA 11	0	99999999999999999
470	006875	Hose clip 40-60	0	99999999999999999
480	051544	Auger	0	99999999999999999
490	050901	Auger motor SPG	0	99999999999999999
500	006378	Cutting ring DL8 07-151	0	99999999999999999
510	045951	Partition plate	0	99999999999999999
510	052480	Partition plate	0	99999999999999999
515	051790	Protection plate for cable BW2	0	99999999999999999
520	048971	Protection plate	0	99999999999999999
530	051604	Protection plate, top, bottom	0	99999999999999999
540	051397	Protection cover GPN 690	0	99999999999999999
550	016567	Hexagon nut M10 with flange and gearing (not illustrated)	0	99999999999999999
560	016565	Hexagon nut M5 with flange and gearing (not illustrated)	0	99999999999999999
570	016586	Hexagon nut M5 DIN 934	0	99999999999999999
580	016594	Hexagon nut M6 DIN 934	0	99999999999999999
590	016553	Hexagon nut M8 with flange and gearing	0	99999999999999999
600	031545	Hexagon screw M5x12 DIN 7500 (not ilustrated)	0	99999999999999999
610	017051	Hexagon screw M6x12 DIN 933 (not illustrated)	0	99999999999999999
620	021504	Hexagon screw M6x45 DIN933	0	99999999999999999
630	015134	Hexagon screw M8x16 DIN 933	0	99999999999999999
640	017086	Hexagon screw M8x20 DIN 933 (not illustrated)	0	99999999999999999
650	031258	Cable	0	99999999999999999
660	031261	Cable pulley	0	99999999999999999
670	031096	Countersinking screw M4x20 DIN965 gv KS (not illustrated)	0	99999999999999999
680	016727	Lock nut M5	0	99999999999999999
690	016171	Locking ring Ø20x1.2	0	99999999999999999
700	006897	Lock washer Ø 6	0	99999999999999999
710	045949	Sieve with eye	0	99999999999999999
725	005043	Base for relay	0	99999999999999999
730	045952	Clamping piece for cable	0	99999999999999999
740	009546	Spring lock	0	99999999999999999
750	050869	Spur gear M2 Z36	0	99999999999999999
760	045771	Spur gear M2 Z45	0	99999999999999999
770	003208	Grommet 10x17.5x1.2	0	99999999999999999
780	013749	Union nut 3/8"	0	99999999999999999
790	006351	Union nut ML8 GV	0	99999999999999999
800	048986	Pellet container cladding	0	99999999999999999
810	050887	BIO91 Reserve supply container Klassik, without motor	0	99999999999999999
820	050888	BIO92 Reserve supply container Premium, without motor	0	99999999999999999
830	050379	Water tank	0	99999999999999999
840	048903	Shaft seal ring DIN 3760AS AD52 ID20	0	99999999999999999
850	045946	Cyclone cover for BioWIN2 to 1.02.2015	0	99999999999999999
850	053466	Cyclone cover	0	99999999999999999
860	019836	Cylinder screw 2.9x16 (not illustrated)	0	99999999999999999
870	018139	Cylinder screw 4.2x13 DIN7981SP (not illustrated)	0	99999999999999999
880	016768	Cylinder screw M3x5	0	99999999999999999
890	052474	Cladding door	0	99999999999999999
900	051779	Cover	0	99999999999999999
910	051755	CoverPB BioWIN2	0	99999999999999999

Item no.	Article no.	Description	Serialnumber from	Serialnumber to
920	051754	Maintenance cover BioWIN2	0	99999999999999999
930	001760	Magnetic lock, black - VW, LWP18-50, LWK	0	99999999999999999
940	000299	Silicone buffer	0	99999999999999999
950	004237	Cylinder screw M5x10 ISO 4762 (not illustrated)	0	99999999999999999
960	051753	Door mounting, bottom	0	99999999999999999
970	009990	Leg M10 x 40	0	99999999999999999
980	051773	Magnetic sheet	0	99999999999999999
985	052482	Suction pipe	0	99999999999999999
990	051775	BIO83 side panel	0	99999999999999999
990	051776	BIO82 side panel	0	99999999999999999
1000	051771	Water tank support	0	99999999999999999
1010	051614	Pedestal	0	99999999999999999
1020	051781	Left side panel, grey	0	99999999999999999
1030	051752	Door mounting, top	0	99999999999999999
1040	012600	Gas spring 4534DS 0100 N	0	99999999999999999
1050	044802	Southco hinge	0	99999999999999999
1060	051751	L-bracket	0	99999999999999999
1070	051783	Pellet container cover	0	99999999999999999

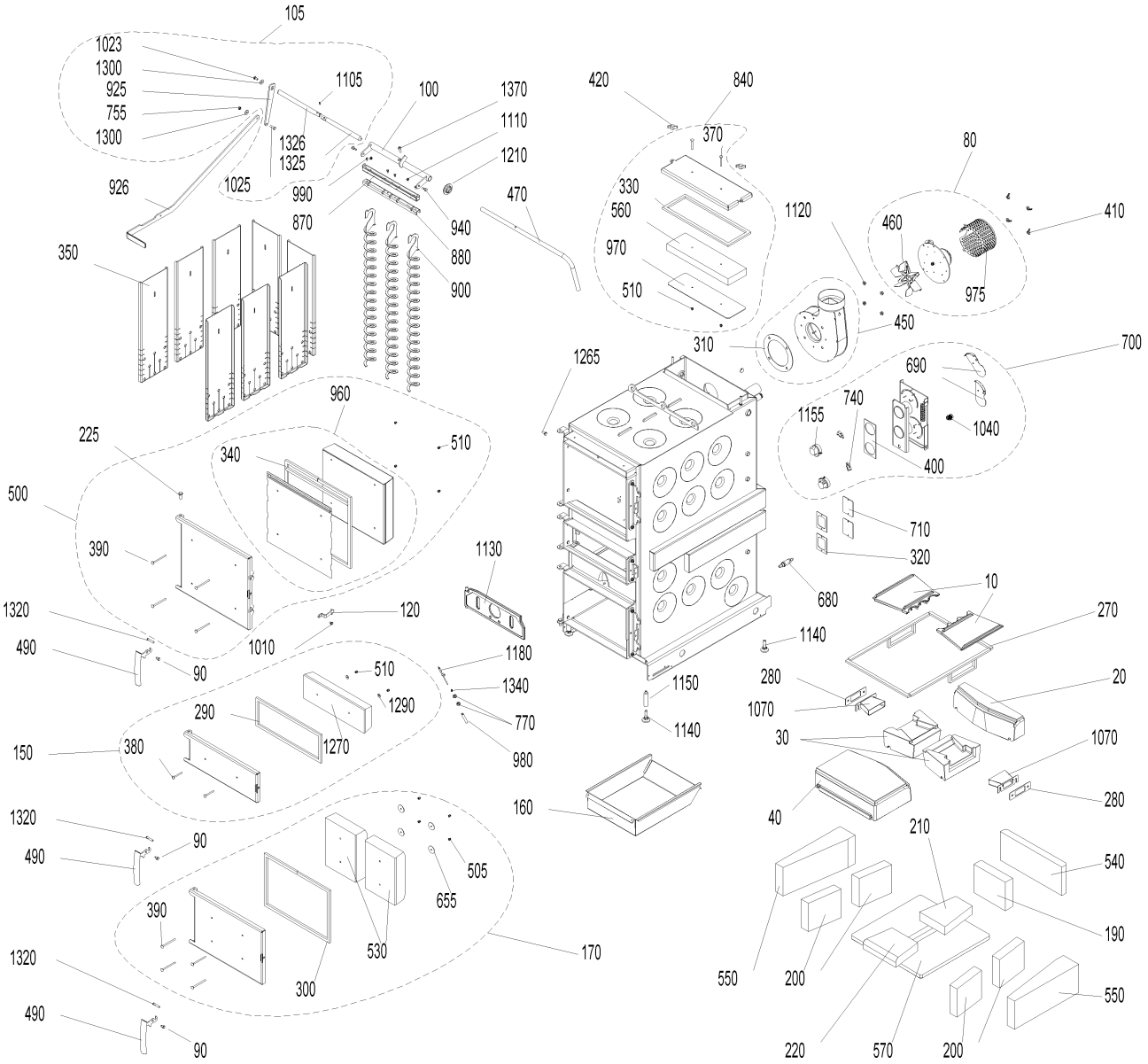
105
1023
1300
925
755
1300
1105
100
1370
1110
1210
1326
1325
1025
926
990
870
940
880
900
470
350
420
840
370
330
560
970
510
1120
80
460
410
975
450
310
1265
700
690
740
1155
1040
400
960
225
340
510
500
390
1130
710
320
680
10
270
1320
120
490
1010
90
1180
1140
510
1340
1150
280
20
1070
290
1290
770
1140
30
1070
150
380
1270
980
160
40
280
1320
90
490
505
655
210
540
390
530
170
190
1320
300
550
200
550
490
90
220
570
200

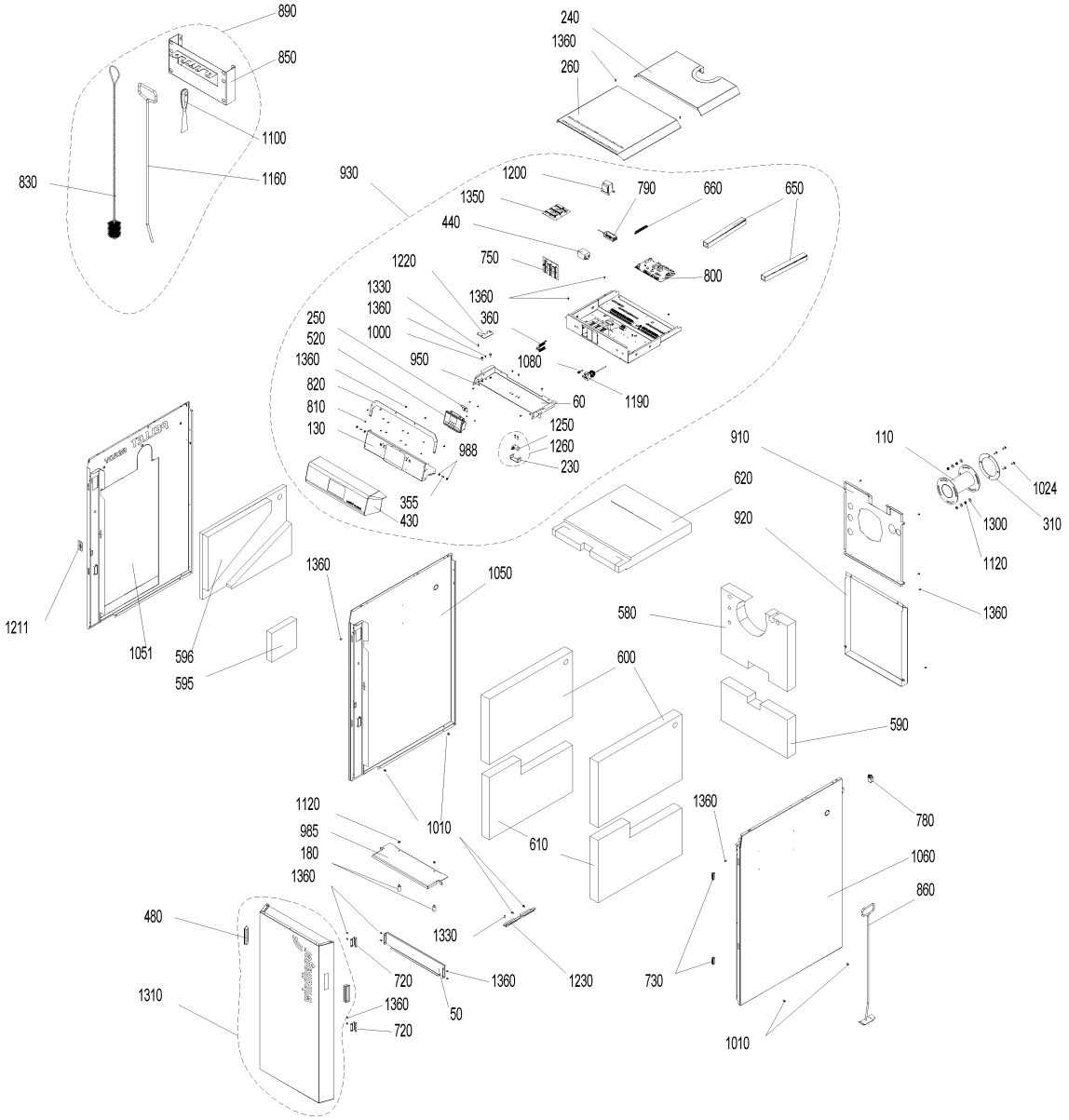
890
850
1100
1160
830
240
1360
260
930
1200
1350
790
660
650
440
750
800
1220
1330
1360
1360
360
250
520
1000
1360
950
1080
820
810
130
60
1190
1250
1260
230
988
355
430
910
110
1024
620
1300
310
920
1120
1360
1211
1051
596
595
1360
1050
580
600
590
1120
985
180
1360
1010
610
1360
780
1060
860
480
1330
720
1360
1230
730
1310
1360
50
720
1010

Item no.	Article no.	Description	Serialnumber from	Serialnumber to
10	007392	Burning plate LWP/LWK	0	99999999999999999
20	007397	Rear burning stone	0	99999999999999999
30	007388	Burning stone left/right LWK/LWP	0	99999999999999999
40	007377	Front burning stone	0	99999999999999999
50	051223	Sensor cover	0	99999999999999999
60	050808	Cover insulation	0	99999999999999999
70	504195	JW-010 Flue gas sensor set with protective pipe	0	99999999999999999
80	051661	Flue gas blower, complete for LWK	0	99999999999999999
90	048881	Axle for door handle CK45	0	99999999999999999
100	046328	Axle for cleaning heating surfaces	0	99999999999999999
105	052463	Axle for cleaning heating surfaces - LogWIN Klassik pellet ready	0	99999999999999999
110	503650	LWKAD1 Adapter for continuously adjustabel flue connection, left or right	0	99999999999999999
120	051244	Safety hook	0	99999999999999999
130	051307	Inside display panel	0	99999999999999999
150	051564	Lighting door, complete	0	99999999999999999
160	045419	Ash pan LWP18-50, LWK	0	99999999999999999
170	051563	Ash door, complete LWK	0	99999999999999999
180	051241	Fastener for carburisation gas duct LWK	0	99999999999999999
190	007383	Rear combustion chamber stone LWP18-30, LWK	0	99999999999999999
200	051233	Combustion chamber stone left/right LWK	0	99999999999999999
210	007384	Bottom rear combustion chamber stone LWP18-30	0	99999999999999999
220	007385	Bottom front combustion chamber stone LWP18-30	0	99999999999999999
225	033104	Door mounting bolt ISO 2341-A - 12x32	0	99999999999999999
230	045820	Door switch clip LWP / LWK	0	99999999999999999
240	051228	Rear cover LWK	0	99999999999999999
250	051297	InfoWIN cover LWK	0	99999999999999999
260	051226	Front cover LWK	0	99999999999999999
270	046119	Rope seal kit for burning stones LWP18-30	0	99999999999999999
280	007391	Seal for secondary air nozzle LWP180-305	0	99999999999999999
290	046267	Lighting door seal LWP18-50, LW	0	99999999999999999
300	046268	Ash door seal LWP18-50, LWK	0	99999999999999999
310	050825	Blower seal LWK	0	99999999999999999
320	009378	Seal for vent cover LWP18-50, LWK	0	99999999999999999
330	051567	Seal for cleaning cover LWK	0	99999999999999999
340	051568	Heating door seal set LWK	0	99999999999999999
350	051569	Hook-in plate LWK	0	99999999999999999
355	051836	Spring-loaded pressure piece M8	0	99999999999999999
360	003726	InfoWIN ribbon cable	0	99999999999999999
370	016178	Round-head screw M6x55	0	99999999999999999
380	016186	Round-head screw M6x60	0	99999999999999999
390	016190	Round-head screw M6x90	0	99999999999999999
400	009305	Flange seal LWP18-50, LWK	0	99999999999999999
410	019410	Wing nut M6	0	99999999999999999
420	007366	Wing nut M8	0	99999999999999999
430	051559	Front control pane LWK	0	99999999999999999
440	007649	Radio interference filter LWP18-50, LWK	0	99999999999999999
450	051577	Blower box, complete LWK	0	99999999999999999
460	053032	Blower wheel	0	99999999999999999
470	045447	Handle for cleaning heating surfaces for LogWIN Premium 180-305	0	99999999999999999
480	051237	Handle recess LWK	0	99999999999999999
490	048811	Boiler handle	0	99999999999999999

Item no.	Article no.	Description	Serialnumber from	Serialnumber to
500	051579	Heating door, complete LWK	0	99999999999999999
505	016192	Cap nut	0	99999999999999999
510	025968	Cap nut M6	0	99999999999999999
520	009879	InfoWIN plus F4 LWK, BioWIN2	0	99999999999999999
530	050585	Insulating stone AT LWK	0	99999999999999999
540	007380	Rear insulating stone for LogWIN Premium 180-305	0	99999999999999999
550	051234	Insulating stone left/right LWK	0	99999999999999999
560	050542	Insulating stone for cleaning cover LWK	0	99999999999999999
570	051236	Bottom insulating stone LWK	0	99999999999999999
580	051217	Top rear insulation LWK	0	99999999999999999
590	051216	Bottom rear insulation LWK	0	99999999999999999
595	007251	Left insulation - LogWIN Klassik pellet ready	0	99999999999999999
596	007250	Top left insulation - LogWIN Klassik pellet ready	0	99999999999999999
600	051214	Top left/right insulation	0	99999999999999999
610	051222	Bottom left/right insulation	0	99999999999999999
620	051215	Top front insulation	0	99999999999999999
630	007165	Lambda sensor cable (not illustrated)	0	99999999999999999
640	048419	Draught fan cable (not illustrated)	0	99999999999999999
650	050837	Cable duct	0	99999999999999999
655	016191	Washer M6 4x40x1,5	0	99999999999999999
660	009928	Terminal bar	0	99999999999999999
680	051646	Lambda sensor	0	99999999999999999
690	040032	Air choke	0	99999999999999999
700	045460	Air control, complete	0	99999999999999999
710	046338	Vent cover	0	99999999999999999
720	051157	Magnet retainer	0	99999999999999999
730	001760	Magnetic lock, black - VW, LWP18-50, LWK	0	99999999999999999
740	009277	Air control microswitch	0	99999999999999999
750	048754	Module connection PCB	0	99999999999999999
755	015992	Nut M8 DIN 934 V2 - LogWIN Klassik pellet ready	0	99999999999999999
770	031156	Hexagon nut M10 DIN 439	0	99999999999999999
780	041430	Mains connection socket 3-pin for MIRA,ETX,PMX,BioWIN10-26,LogWIN Premium 180-505,EasyWIN Premium 180,BioWIN XL 35-60, FireWIN	0	99999999999999999
790	051645	Power supply unit 12V	0	99999999999999999
800	011999	FMF PCB for LogWIN Premium 180-505	0	99999999999999999
810	051308	PT®- oval head screw	0	99999999999999999
820	051301	Pos.plate LWK	0	99999999999999999
830	003088	GWX992 Cleaning brush 950x45mm/45x70 mm for GWX, LogWIN Premium 180-505, EasyWIN Klassik/Premium 180	0	99999999999999999
840	051663	Cleaning cover LWK	0	99999999999999999
850	042743	Holder for cleaning equipments for VarioWIN, LogWIN Premium 180-505,SilvaWIN,BioWIN XL35-60,EasWIN Klassik/Premium 180	0	99999999999999999
860	040328	Cleaning rake for HMX,PMX, EasyWIN Klassik/Premium 180, LogWIN Premium 180-505	0	99999999999999999
870	046325	Top cleaning profile for LogWIN Premium 180-305	0	99999999999999999
880	046323	Bottom cleaning profile for LogWIN Premium 180-305	0	99999999999999999
890	502843	EWK020 Cleaning kit consisting of: cleaning brush, poker, spatula, hanger	0	99999999999999999
900	046322	Cleaning auger for LogWIN Premium 180-505	0	99999999999999999
910	050838	Top rear panel LWK	0	99999999999999999
920	050839	Bottom rear panel LWK	0	99999999999999999
925	052212	Shaker lever	0	99999999999999999
926	052202	Handle for cleaning heating surfaces - LogWIN Klassik pellet ready	0	99999999999999999
930	051134	LWK03 LOGWIN KLASSIK - SWITCH COVER	0	99999999999999999
940	006756	Screw M6 for heating surface cleaning for PMX,BioWIN 10-26,FireWIN, BioWIN XL 35-60, LogWIN Premium 180-505	0	99999999999999999
950	033528	Cylinder screw M 4 x 6 - 8.8	0	99999999999999999

Item no.	Article no.	Description	Serialnumber from	Serialnumber to
960	053240	Heating door protection plate LWK	0	99999999999999999
970	051666	Cleaning cover protection plate LWK	0	99999999999999999
975	010882	Flue gas blower protection hood LWK	0	99999999999999999
980	051231	Thermocontrol sensor protective tube LWK	0	99999999999999999
985	051230	Carborisation gas duct LWK	0	99999999999999999
988	016659	Hexagon nut M8 DIN434	0	99999999999999999
990	031545	Hexagon screw M5x12 DIN 7500 (not ilustrated)	0	99999999999999999
1000	015471	Hexagon screw M6x20 DIN 933	0	99999999999999999
1010	031549	Hexagon screw M6x12 DIN 7500	0	99999999999999999
1020	017882	Thread-rolling hexagon screw DIN 7500 - M8x16 TT - galvanised for VarioWIN, EasyWIN Klassik/Premium 180	0	99999999999999999
1023	016721	Hexagon screw M8x16 DIN 933	0	99999999999999999
1024	017086	Hexagon screw M8x20 DIN 933 (not illustrated)	0	99999999999999999
1025	017191	Hexagon screw M8x25 DIN 933	0	99999999999999999
1030	017046	Cyl. screw M 8X30	0	99999999999999999
1040	017205	Hexagon screws M12x25-8.8	0	99999999999999999
1050	051667	Side wall left LWK	0	99999999999999999
1051	052390	Side wall left LWK Pellet ready	0	99999999999999999
1060	051668	Side wall right LWK	0	99999999999999999
1070	045326	Secondary air nozzle complete for LogWIN Premium 180-305	0	99999999999999999
1075	003228	6.3A fuse (not illustrated)	0	99999999999999999
1080	003663	Fuse holder	0	99999999999999999
1090	016073	WERV013 Silicone seal, black 310ml	0	99999999999999999
1100	009540	Spatula	0	99999999999999999
1105	018184	Clamping pin DIN 1481 - Ø 5x14 for VarioWIN	0	99999999999999999
1110	016566	Hexagon nut with flange and gearing M6	0	99999999999999999
1120	016553	Hexagon nut M8 with flange and gearing	0	99999999999999999
1130	051162	Vertical grate LWK/LWP	0	99999999999999999
1140	009994	Foot M12X40 JTB38 for HMX, EasyWIN Klassik/Premium 180, LogWIN Premium 180-505	0	99999999999999999
1150	007453	Leg extension for LogWIN Premium 180-505, EasyWIN Klassik/Premium 180	0	99999999999999999
1155	040429	Servomotor for HMX, SilvaWIN, LogWIN Premium 180-505	0	99999999999999999
1160	080664	FAX192 Poker for FAX,HMX,SilvaWIN,FKX,EasyWIN Klassik/Premium 180,LogWIN Premium 180-505	0	99999999999999999
1170	009982	Immersion sensor 1,3m LWK	0	99999999999999999
1180	007626	Thermocouple	0	99999999999999999
1190	005672	Thermostat LS1+100-6U	0	99999999999999999
1200	007096	Transformer for O2 sensor 18VA for LogWIN Premium 180-505	0	99999999999999999
1210	048812	Grommet for EasyWIN, LogWIN Premium 180-505	0	99999999999999999
1211	052208	Seal	0	99999999999999999
1220	051220	Top door hinge LWK	0	99999999999999999
1230	050783	Bottom door hinge LWK	0	99999999999999999
1250	007128	Microswitch Z-15GQ-B for LogWIN Premium 180-505, BioWIN XL 35-60	0	99999999999999999
1260	046072	Door switch complete for LogWIN Premium 180-505	0	99999999999999999
1265	051671	Door screw M8	0	99999999999999999
1270	050590	Door stone for lighting door LWK	0	99999999999999999
1290	031753	Disc 6 ISO 7093	0	99999999999999999
1300	031755	Disc 8 ISO 7093	0	99999999999999999
1310	050780	Cladding door, complete	0	99999999999999999
1320	050568	Locking axle LWK	0	99999999999999999
1325	052207	Shaft 1 or cleaning heating surfaces - LogWIN Klassik pellet ready	0	99999999999999999
1326	052211	Shaft 2 or cleaning heating surfaces - LogWIN Klassik pellet ready	0	99999999999999999
1330	015507	Dog point screw	0	99999999999999999
1340	007164	Tension spring	0	99999999999999999

Item no.	Article no.	Description	Serialnumber from	Serialnumber to
1350	007095	Extra PCB for O2-mesure or pumping rotation speed control for BioWIN cascade, LogWIN Premium 180-505	0	99999999999999999
1360	018140	Cylinder screw 4.2x13 DIN7981ST (not illustrated)	0	99999999999999999

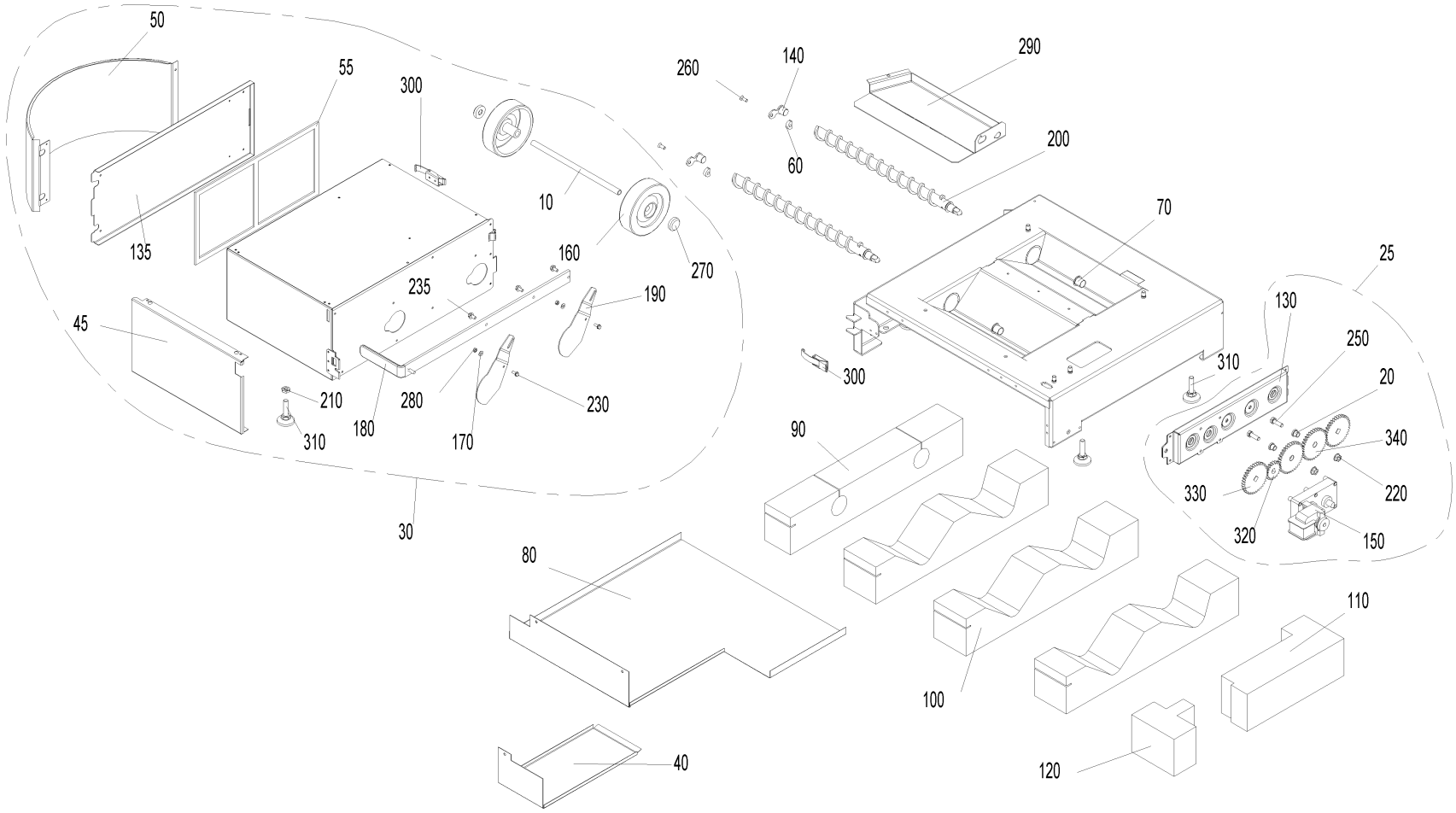
50
55
300
135
10
160
270
235
190
45
210
310
180
280
170
230
30
260
140
290
60
200
70
300
310
25
130
250
20
340
330
220
320
150
90
80
100
110
40
120

Item no.	Article no.	Description	Serialnumber from	Serialnumber to
10	051379	Ash box axle	0	99999999999999999
20	006745	Ash conveyor bearing bush	0	99999999999999999
25	054418	Ash removal, completely pre- mounted, BioWIN2	0	99999999999999999
30	051262	BIO90 Ash box, cpl	0	99999999999999999
40	051125	Cover for ash conveyor motor	0	99999999999999999
45	051633	Ash box lid	0	99999999999999999
50	051637	Ash box lid curve	0	99999999999999999
55	046665	Container seal	0	99999999999999999
60	048573	Distance	0	99999999999999999
70	012508	Friction bearing with connector	0	99999999999999999
80	051124	Cup insulation	0	99999999999999999
90	051126	Ash pipe insulation	0	99999999999999999
100	051127	Ash chamfer insulation	0	99999999999999999
110	051128	Motor insulation, rear	0	99999999999999999
120	051129	Motor insulation, front	0	99999999999999999
130	048572	Ash conveyor bracket	0	99999999999999999
135	051635	Ash box flap	0	99999999999999999
140	051120	Auger bearing	0	99999999999999999
150	044665	Motor	0	99999999999999999
160	006888	Wheel AG 125-12	0	99999999999999999
170	018309	Disc 5 DIN134	0	99999999999999999
180	051389	Ash box scraper	0	99999999999999999
190	050686	Sliding plate	0	99999999999999999
200	051542	Auger	0	99999999999999999
210	031156	Hexagon nut M10 DIN 439	0	99999999999999999
220	016553	Hexagon nut M8 with flange and gearing	0	99999999999999999
230	031545	Hexagon screw M5x12 DIN 7500 (not ilustrated)	0	99999999999999999
235	031549	Hexagon screw M6x12 DIN 7500	0	99999999999999999
240	017086	Hexagon screw M8x20 DIN 933 (not illustrated)	0	99999999999999999
250	017191	Hexagon screw M8x25 DIN 933	0	99999999999999999
260	016863	Countersinking screw M6x16	0	99999999999999999
270	006889	Washer Ø12	0	99999999999999999
280	016727	Lock nut M5	0	99999999999999999
290	050692	Ash box base	0	99999999999999999
300	009546	Spring lock	0	99999999999999999
310	009990	Leg M10 x 40	0	99999999999999999
320	047543	Spur gear M2 Z20	0	99999999999999999
330	050869	Spur gear M2 Z36	0	99999999999999999
340	048566	Spur gear M2 Z36 Ø12	0	99999999999999999

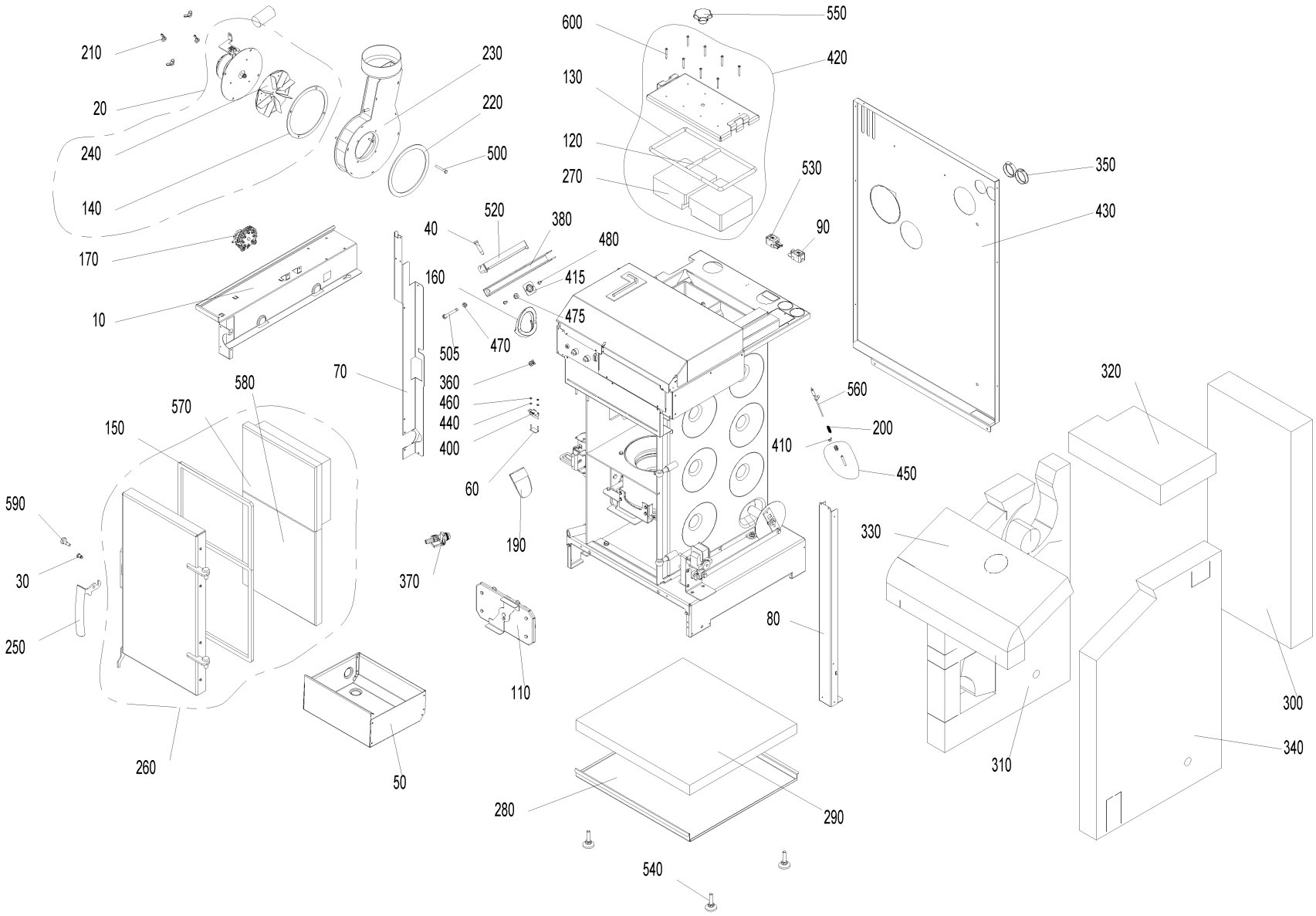
210
20
240
140
170
10
230
220
500
520
40
380
480
160
415
475
505
470
70
360
460
440
400
60
190
370
580
570
150
590
30
250
260
50
110
600
550
420
130
120
270
530
90
350
430
560
200
410
450
320
330
80
310
300
340
280
290
540

Item no.	Article no.	Description	Serialnumber from	Serialnumber to
10	050918	Cover plate	0	99999999999999999
20	053010	Flue gas blower	0	99999999999999999
30	048881	Axle for door handle CK45	0	99999999999999999
40	013813	Collar screw	0	99999999999999999
50	048928	Ash pan	0	99999999999999999
60	051045	Fastened microswitch, complete	0	99999999999999999
70	051109	Cover, left	0	99999999999999999
80	048609	Cover, right	0	99999999999999999
90	070324	Socket, 3-pin, black	0	99999999999999999
110	051056	Coasting surface cover, complete	0	99999999999999999
120	051040	Sealing cord, short	0	99999999999999999
120	051041	Sealing cord, short	0	99999999999999999
130	051017	Sealing cord for cleaning cover	0	99999999999999999
130	051034	Sealing cord for cleaning cover	0	99999999999999999
140	051006	Blower box seal	0	99999999999999999
150	048916	Heating door seal	0	99999999999999999
160	048926	Auger tube seal	0	99999999999999999
170	045404	Differential pressure watchdog	0	99999999999999999
190	048921	Down chute	0	99999999999999999
200	050647	Combustion chamber sensor spring	0	99999999999999999
210	019410	Wing nut M6	0	99999999999999999
220	051005	Blower seal	0	99999999999999999
230	053234	Blower box for BioWIN102-262	0	99999999999999999
240	052951	Blower wheel Ø160 x 25 for BioWIN2 102 - 262	0	99999999999999999
250	007480	Boiler handle	0	99999999999999999
260	051545	Heating door cpl. mounted	0	99999999999999999
270	050636	Insulating stone for cleaning cover	0	99999999999999999
270	051007	Insulating stone for cleaning cover	0	99999999999999999
280	048863	Cup insulation 10-26 K BW2	0	99999999999999999
290	048864	Floor insulation	0	99999999999999999
300	051116	Rear insulation	0	99999999999999999
310	051119	Left insulation	0	99999999999999999
320	048910	Coasting surface insulation	0	99999999999999999
330	048911	Top insulation	0	99999999999999999
340	050924	Right insulation	0	99999999999999999
350	004096	Cable feed-through 2400 black Ø50	0	99999999999999999
360	051112	Cage nut M8	0	99999999999999999
370	004385	KFE cock	0	99999999999999999
380	048611	Pellet container clamp	0	99999999999999999
400	007632	Microswitch with lever	0	99999999999999999
410	031274	Eyelet M6	0	99999999999999999
415	052484	Platelet flanged nut	0	99999999999999999
420	048870	Cleaning cover, complete	0	99999999999999999
420	050477	Cleaning cover, complete	0	99999999999999999
430	050916	Rear wall	0	99999999999999999
440	021474	Disc 3 DIN134	0	99999999999999999
450	051069	Protective tube for combustion chamber sensor, complete	0	99999999999999999
460	016551	Hexagon nut M3 DIN 934	0	99999999999999999
470	015992	Nut M8 DIN 934 V2 - LogWIN Klassik pellet ready	0	99999999999999999
475	016553	Hexagon nut M8 with flange and gearing	0	99999999999999999
480	031545	Hexagon screw M5x12 DIN 7500 (not ilustrated)	0	99999999999999999

Item no.	Article no.	Description	Serialnumber from	Serialnumber to
500	021504	Hexagon screw M6x45 DIN933	0	99999999999999999
505	016461	Hexagon screw M8x80 DIN 933	0	99999999999999999
520	048975	Clamping rail	0	99999999999999999
530	070323	Plug, 3-pin, black	0	99999999999999999
540	009990	Leg M10 x 40	0	99999999999999999
550	005125	Star handle M12 x 35	0	99999999999999999
560	007626	Thermocouple	0	99999999999999999
570	048914	Door stone	0	99999999999999999
580	050447	Bottom door stone	0	99999999999999999
590	051004	Locking pin	0	99999999999999999
600	016719	Cylinder drilling screw 4.2 x 38 DIN7504	0	99999999999999999

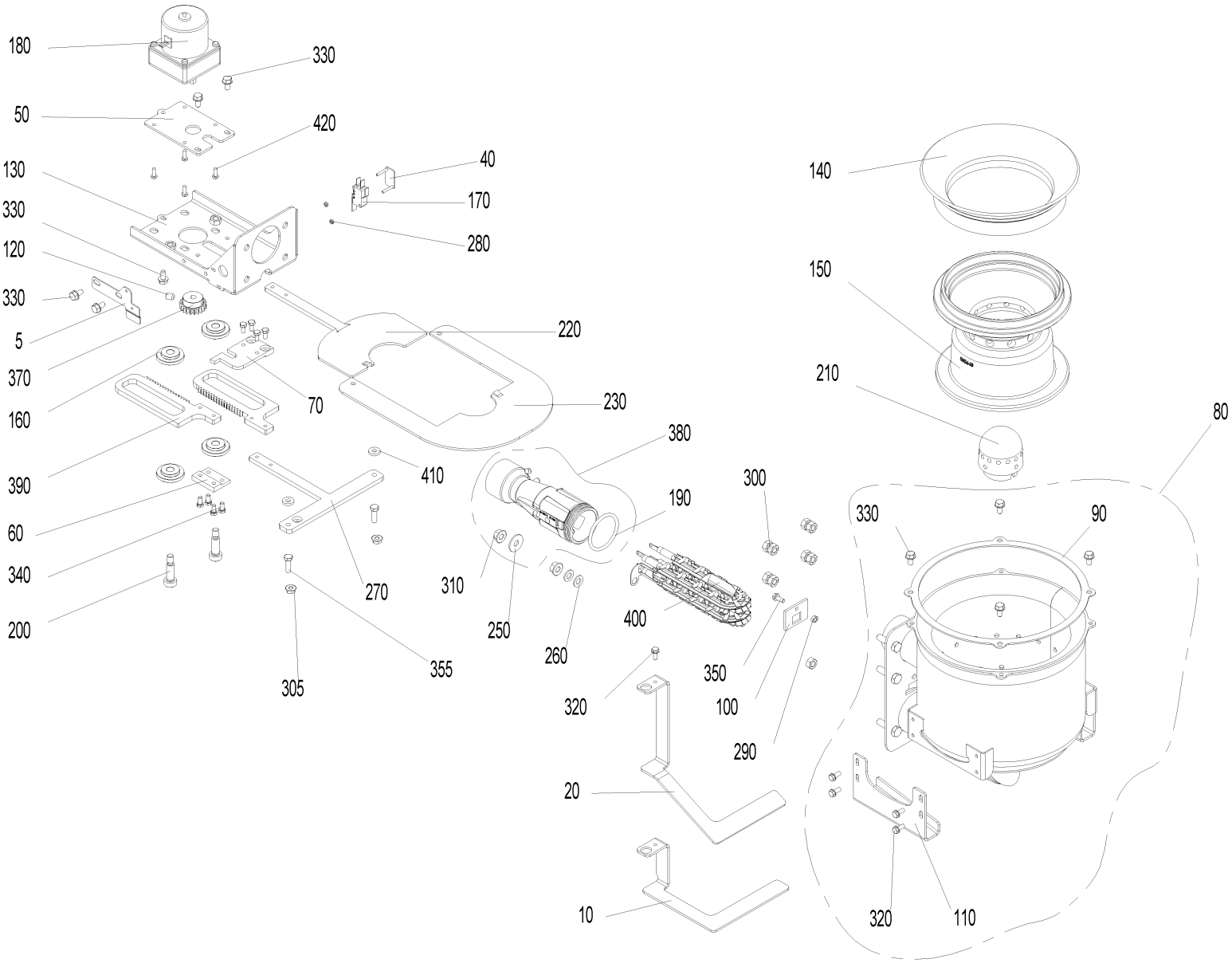
180
330
50
420
130
40
170
330
280
120
330
5
220
370
70
230
160
380
390
410
300
190
60
340
270
310
250
400
200
260
350
305
355
320
100
290
20
10
140
150
210
80
330
90
320
110

Item no.	Article no.	Description	Serialnumber from	Serialnumber to
5	053544	Stop plate		
10	051048	Ash stop plate, Klassik, Premium		
20	051046	Microswitch fastening		
40	051045	Fastened microswitch, complete		
50	050632	Bracket mounting plate		
60	050649	Mounting plate		
70	051042	Mounting plate, top		
80	051065	Burner		
90	048861	Burner seal		
100	048841	Driving rod feed-through		
110	048842	Grate plate guide		
120	033112	Setscrew M8x10 DIN916		
125	053643	Cable - ignition element for BW1, BW2, FireWIN and VarioWIN		
130	050639	Shake-out bracket		
140	050642	Cone, top part 45°		
150	048941	Cone, bottom part for BioWIN2 21/26		
160	007125	Bearing for vibrating drive		
170	007632	Microswitch with lever		
180	012561	Shake-out motor		
190	006849	O-ring FPM70 45 x 4		
200	017048	Shoulder screw M8 10x25 ISO 7379		
210	047774	Primary air pin for BioWIN10-26 FireWIN bis Los9 und PMX 21-26		
220	051051	Grate plate, left		
230	053539	Grate plate, right		
240	021474	Disc 3 DIN134		
250	031755	Disc 8 ISO 7093		
260	024779	Disc 8 ISO 7089		
270	051023	Grate plate scraper		
280	016551	Hexagon nut M3 DIN 934		
290	017035	Hexagon nut M5 DIN 934		
300	031153	Hexagon nut M8 DIN 934		
305	016566	Hexagon nut with flange and gearing M6		
310	016553	Hexagon nut M8 with flange and gearing		
320	031545	Hexagon screw M5x12 DIN 7500 (not ilustrated)		
330	031549	Hexagon screw M6x12 DIN 7500		
340	016756	Hexagon screw M5x10 DIN 933		
355	015471	Hexagon screw M6x20 DIN 933		
370	007222	Spur gear M1,5; Z21		
380	051067	Venturi nozzle		
390	048161	Steering rack BioWin2 10-26		
400	055201	Ignition element BioWIN10-26, FireWIN from lot 15, VarioWIN from lot 15 BioWIN XL, LWK		
402	053851	de: Zündelement inkl. Kabel beigelegt.		
410	051054	Intermediate plate		
420	016780	Cylinder screw M4x12 DIN 7985		

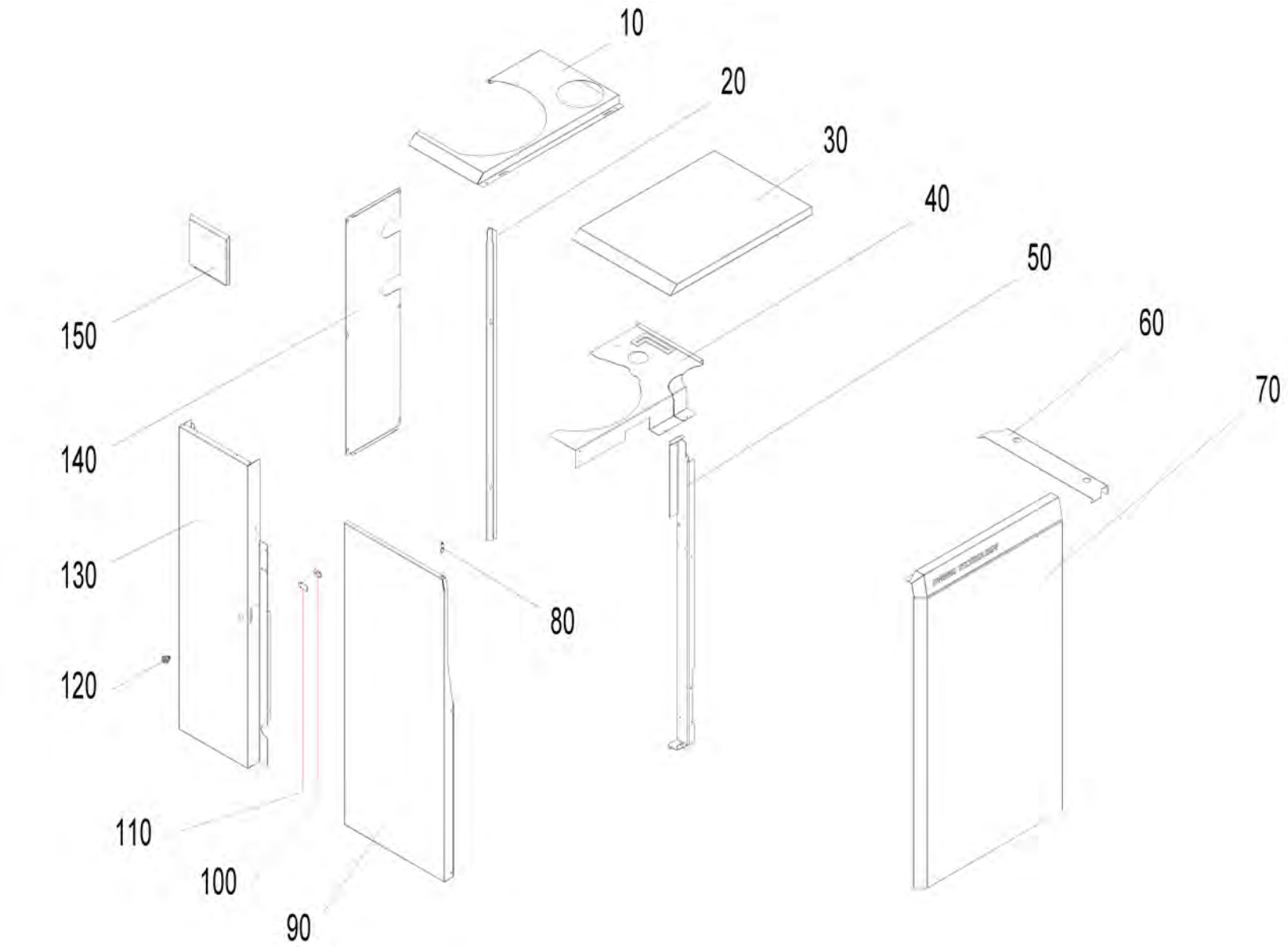
10
20
30
40
50
60
70
80
90
100
110
120
130
140
150

Item no.	Article no.	Description	Serialnumber from	Serialnumber to
10	051901	Cover pellets storage side for BioWin2-DuoWin	0	99999999999999999
20	051883	Angle profile rear panel for BioWin2-DuoWin	0	99999999999999999
30	051875	Cover boiler side BioWin2-DuoWin	0	99999999999999999
40	051903	Cover plate control panel for BioWin2-DuoWin	0	99999999999999999
50	051877	Door hinge bracket for BioWin2-DuoWin	0	99999999999999999
60	051872	Angle profile for positioning BioWin2-DuoWin	0	99999999999999999
70	051902	Front panel BioWIN2 - DuoWIN	0	99999999999999999
80	007191	Locking bolt with pull ring GN 717-5-M8-A-ST	0	99999999999999999
90	051899	Cladding door for BioWIN2 - DuoWIN	0	99999999999999999
100	047891	Driver	0	99999999999999999
110	051882	Locking plate for BioWIN2 - DuoWIN	0	99999999999999999
120	012256	Turning bolt	0	99999999999999999
130	051900	Rear left side panel for BioWIN2 - DuoWIN	0	99999999999999999
140	051884	Rear panel for BioWIN2 - DuoWIN	0	99999999999999999
150	051886	Pellet container cover for BioWin2-DuoWin	0	99999999999999999
160	504048	Flue connection DuoWin for pellet boiler	0	99999999999999999

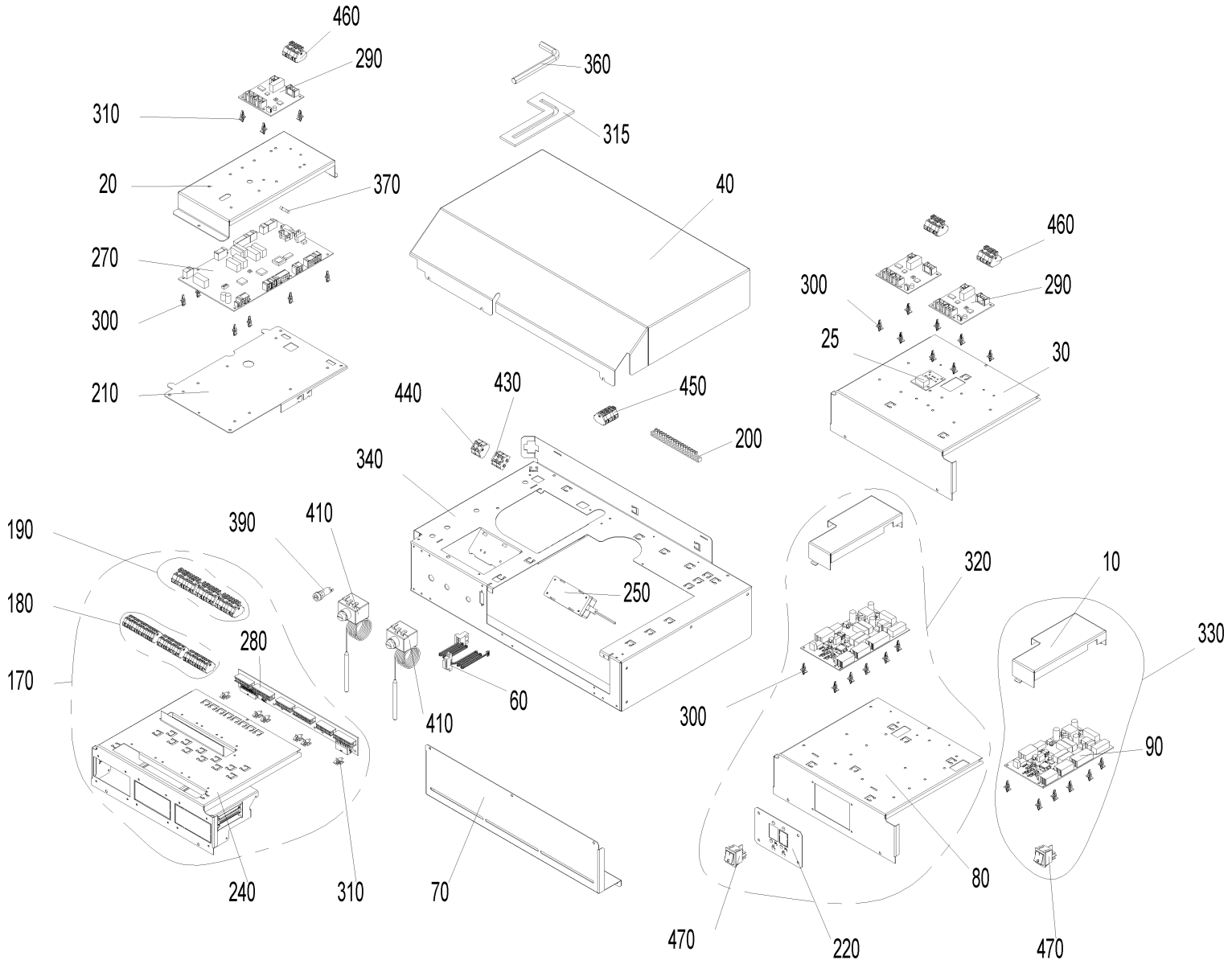
460
290
310
20
370
270
300
210
360
315
40
460
300
290
25
30
440
430
450
200
340
250
190
180
170
390
410
280
60
410
240
310
70
320
10
330
300
90
80
470
220
470

Item no.	Article no.	Description	Serialnumber from	Serialnumber to
10	048750	BUML TTL 2Z cover	0	99999999999999999
20	048955	PCB cover	0	99999999999999999
25	012012	LON connection diagram	0	99999999999999999
30	051382	REG000BW2 External control system cover	0	99999999999999999
40	048618	Control panel cover	0	99999999999999999
60	050970	Ribbon cable, Lon	0	99999999999999999
70	048902	Retaining plate	0	99999999999999999
80	048613	Retaining bracket, REG	0	99999999999999999
90	009767	BUML TTL 2Z interface	0	99999999999999999
100	002059	Power supply cable (not illustrated)	0	99999999999999999
110	050971	Power supply cable OT (not illustrated)	0	99999999999999999
120	043586	Draught fan cable (not illustrated)	0	99999999999999999
130	003719	TTL cable (not illustrated)	0	99999999999999999
140	040333	Wiring harness 12 V (not illustrated)	0	99999999999999999
150	040335	Wiring harness 230 V (not illustrated)	0	99999999999999999
160	040334	Wiring harness AAT HFR (not illustrated)	0	99999999999999999
170	050910	MESBW2 Cable harness	0	99999999999999999
180	051415	Cable harness MES extra-low voltage 12 V	0	99999999999999999
190	051414	Cable harness MES low voltage 230 V	0	99999999999999999
200	009928	Terminal bar	0	99999999999999999
210	050959	Bracket fireing automat	0	99999999999999999
220	048952	Rocker switch bracket	0	99999999999999999
230	018190	Oval-head screw 3.2x16 (not illustrated)	0	99999999999999999
240	051390	Module guide complete	0	99999999999999999
250	051645	Power supply unit 12V	0	99999999999999999
260	005784	Pin connector (not illustrated)	0	99999999999999999
270	011990	PCB, FMP BW2	0	99999999999999999
280	050996	MES PCB	0	99999999999999999
290	011994	PCB board, FMO-J	0	99999999999999999
300	007609	PCB holder	0	99999999999999999
310	007549	PCB holder, Richco	0	99999999999999999
315	051766	Position hexagon pin screwdriver	0	99999999999999999
320	050912	REG 021	0	99999999999999999
330	050913	REG 024	0	99999999999999999
340	048605	Control panel, floor	0	99999999999999999
360	027391	Hexagon pin screwdriver 10 mm DIN 911	0	99999999999999999
370	006900	Fuse 1 A T 5x20 ceramic tube	0	99999999999999999
380	003228	6.3A fuse (not illustrated)	0	99999999999999999
390	003663	Fuse holder	0	99999999999999999
400	007629	Immersion sensor PT 1000 (not illustrated)	0	99999999999999999
405	502186	MES009M Immersion sensor	0	99999999999999999
410	005672	Thermostat LS1+100-6U	0	99999999999999999
415	003208	Grommet 10x17.5x1.2	0	99999999999999999
430	006833	Wago terminal block 261; 4-pin "12V GND"	0	99999999999999999
440	006834	Wago terminal block 261; 4-pin "safety 1-4"	0	99999999999999999
450	007656	Wago terminal block 261; 6-pin	0	99999999999999999
460	010047	Wago terminal block 261; 6-pin extra PCB	0	99999999999999999
470	005563	Rocker switch SW/GR 0-1	0	99999999999999999
480	018140	Cylinder screw 4.2x13 DIN7981ST (not illustrated)	0	99999999999999999

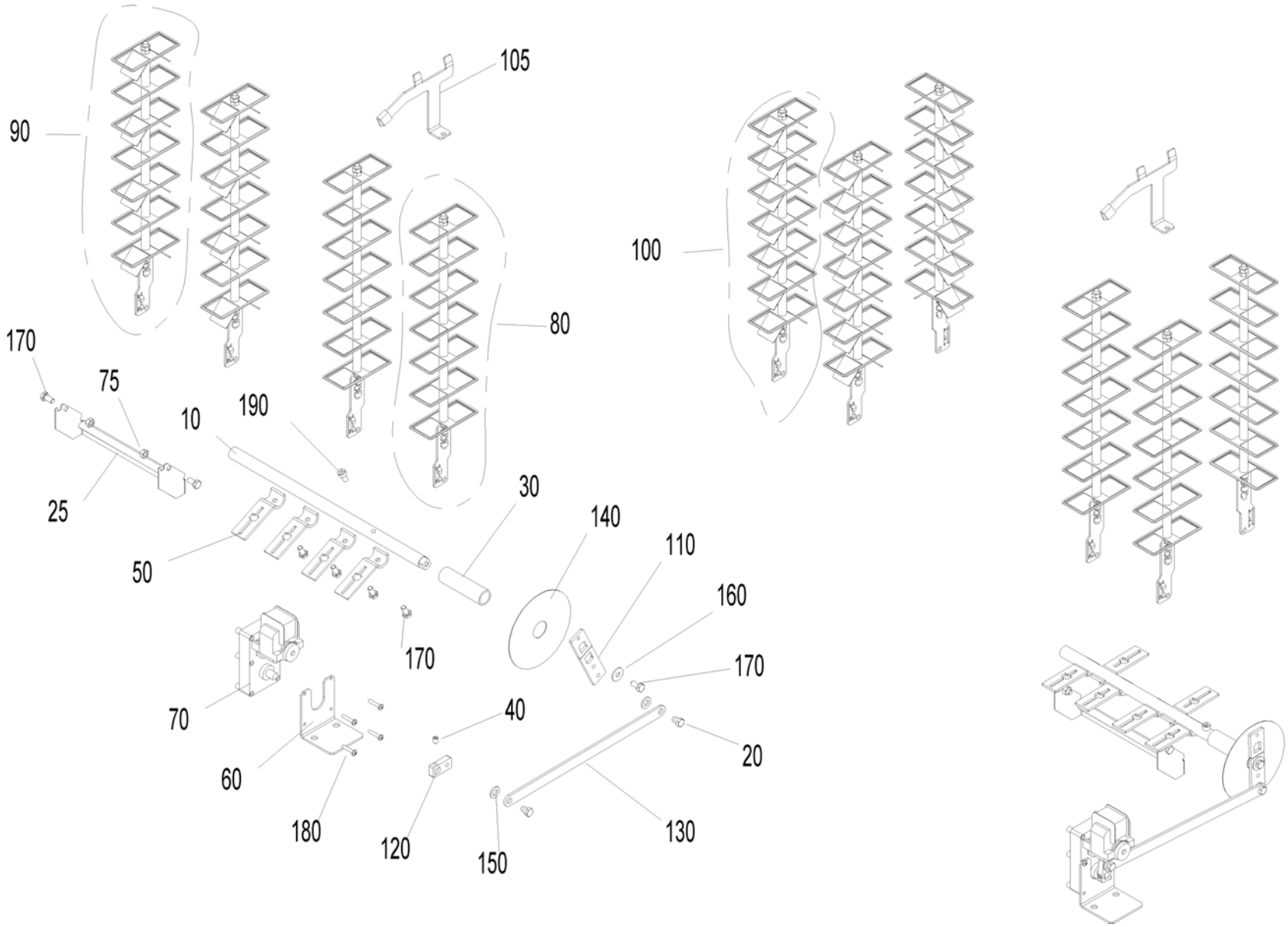
90
105
80
100
170
75
10
190
25
50
30
140
110
160
170
170
70
40
20
60
180
120
150
130

Item no.	Article no.	Description	Serialnumber from	Serialnumber to
10	048882	Axle heating surface BW2 10-26	0	99999999999999999
20	012502	Collar screw	0	99999999999999999
25	051624	Ash sheet	0	99999999999999999
30	048980	Distance rod	0	99999999999999999
40	033112	Setscrew M8x10 DIN916	0	99999999999999999
50	051547	Lever for cleaning heating surfaces	0	99999999999999999
60	051121	L-bracket, motor HFR	0	99999999999999999
70	044665	Motor	0	99999999999999999
75	015992	Nut M8 DIN 934 V2 - LogWIN Klassik pellet ready	0	99999999999999999
80	051609	Clearer flat	0	99999999999999999
90	051610	Clearer flat with turbulator	0	99999999999999999
100	051611	Clearer flat with turbulator	0	99999999999999999
105	051076	Cleaning plate for combustion chamber	0	99999999999999999
110	048884	Shaker lever 1	0	99999999999999999
120	048885	Shaker lever 2	0	99999999999999999
130	051367	Shaker lever 3	0	99999999999999999
140	051122	Disc	0	99999999999999999
150	024780	Disc 10 ISO7089	0	99999999999999999
160	031755	Disc 8 ISO 7093	0	99999999999999999
170	016721	Hexagon screw M8x16 DIN 933	0	99999999999999999
180	016837	Cylinder screw M5x25 ISO 7045	0	99999999999999999
190	016773	Cylinder screw M8x16 ISO 4762	0	99999999999999999

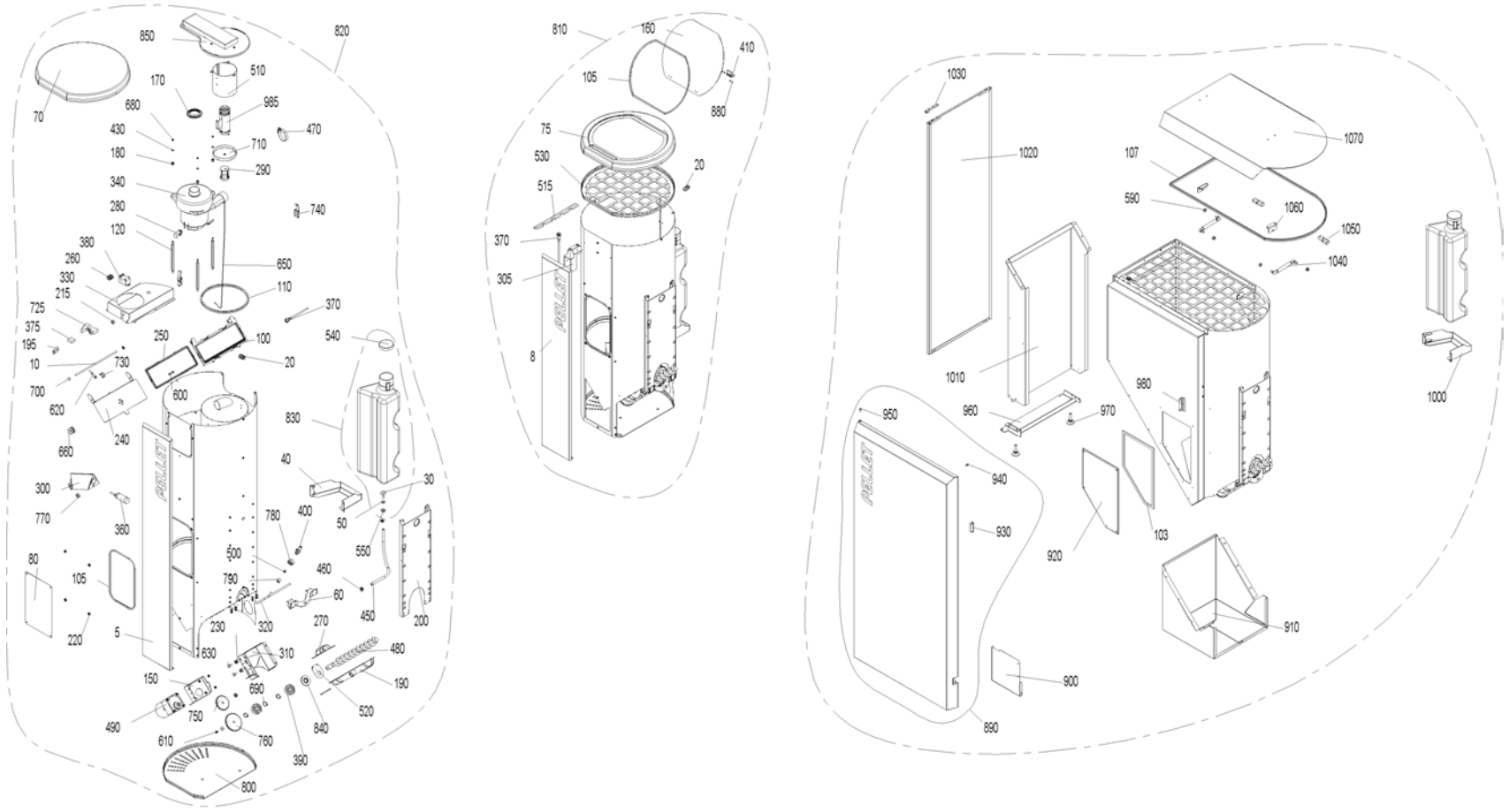
850
820
70
510
170
985
680
470
430
710
180
290
340
740
280
120
380
650
260
330
110
215
370
725
375
250
100
540
195
730
20
10
700
600
620
240
830
660
40
30
300
400
50
770
360
780
550
80
500
460
105
790
60
450
200
220
5
230
320
270
480
630
310
150
190
690
520
490
750
840
610
760
390
800
810
160
410
105
880
75
530
20
515
370
305
8
1030
1020
107
1070
590
1060
1050
1040
1010
980
960
970
1000
950
940
930
920
103
910
900
890

Item no.	Article no.	Description	Serialnumber from	Serialnumber to
5	051749	PB cover plate, grey	0	99999999999999999
8	051758	PB Klassik cover plate, grey	0	99999999999999999
10	042452	Feed axle	0	99999999999999999
20	006340	Mount connections PG9	0	99999999999999999
30	006877	Water connection	0	99999999999999999
40	051107	Water tank support	0	99999999999999999
50	006851	Support plate, motor	0	99999999999999999
60	048974	Fastening bracket	0	99999999999999999
70	050884	Pellet container cover	0	99999999999999999
75	051000	Pellet container cover Klassik	0	99999999999999999
80	050868	Cover reserve supply	0	99999999999999999
100	031254	Seal frame	0	99999999999999999
103	046665	Container seal	0	99999999999999999
105	053465	Reserve supply container seal	0	99999999999999999
107	053467	Seal profile reserve supply container 200 kg	0	99999999999999999
110	042232	Seal section	0	99999999999999999
120	031256	Distance bolt	0	99999999999999999
130	051386	Cheese head screw M5x10 Taptite	0	99999999999999999
140	051387	Cheese head screw M5x10 Taptite, grey	0	99999999999999999
150	051114	Flange, auger motor	0	99999999999999999
160	051001	Filling cover	0	99999999999999999
170	031253	Blower seal	0	99999999999999999
180	009559	Rubber grommet DK 6-9-12-7	0	99999999999999999
190	053540	Half-collar auger tube	0	99999999999999999
195	005077	Bracket	0	99999999999999999
200	048976	Retaining bracket, pellet tank	0	99999999999999999
210	045048	Cable feed with relay	0	99999999999999999
215	009542	Cable feed-through	0	99999999999999999
220	051388	Cage nut M5	0	99999999999999999
230	051112	Cage nut M8	0	99999999999999999
240	045955	Receptacle flap	0	99999999999999999
250	031257	Flap seal	0	99999999999999999
260	000965	Terminal, 3-pin	0	99999999999999999
270	048967	Clamp collar	0	99999999999999999
280	006859	Carbon brushes for blower motor	0	99999999999999999
290	042035	Piston	0	99999999999999999
300	048970	Proximity switch bracket	0	99999999999999999
305	051786	Proximity switch bracket lid	0	99999999999999999
310	048891	Auger motor bracket	0	99999999999999999
320	050867	Back-burn safeguard lead	0	99999999999999999
330	050866	Air duct	0	99999999999999999
340	044667	Blower motor 122151-12 for feed Conversion instructions for use with PMX 15-26 are enclosed! for BioWIN 10-26, PMX,BioWIN XL 35-6	0	99999999999999999
360	006821	Proximity switch, capacitive	0	99999999999999999
370	006832	Proximity switch M12, inductive	0	99999999999999999
375	005026	OKE9281 Cable protection plate	0	99999999999999999
380	005067	BW2 Relay 30A 250V	0	99999999999999999
390	012499	Grooved ball bearing	0	99999999999999999
400	042510	Burn-back protection completely assembled for PMX, BioWIN 10-26	0	99999999999999999
410	050990	Hinge M345	0	99999999999999999
420	018058	U-washer	0	99999999999999999
430	018309	Disc 5 DIN134	0	99999999999999999

Item no.	Article no.	Description	Serialnumber from	Serialnumber to
440	031753	Disc 6 ISO 7093	0	99999999999999999
450	008915	Hose 7x2	0	99999999999999999
460	006874	Hose clip ABA 11	0	99999999999999999
470	006875	Hose clip 40-60	0	99999999999999999
480	051544	Auger	0	99999999999999999
490	050901	Auger motor SPG	0	99999999999999999
500	006378	Cutting ring DL8 07-151	0	99999999999999999
510	045951	Partition plate	0	99999999999999999
510	052480	Partition plate	0	99999999999999999
515	051790	Protection plate for cable BW2	0	99999999999999999
520	048971	Protection plate	0	99999999999999999
530	051604	Protection plate, top, bottom	0	99999999999999999
540	051397	Protection cover GPN 690	0	99999999999999999
550	016567	Hexagon nut M10 with flange and gearing (not illustrated)	0	99999999999999999
560	016565	Hexagon nut M5 with flange and gearing (not illustrated)	0	99999999999999999
570	016586	Hexagon nut M5 DIN 934	0	99999999999999999
580	016594	Hexagon nut M6 DIN 934	0	99999999999999999
590	016553	Hexagon nut M8 with flange and gearing	0	99999999999999999
600	031545	Hexagon screw M5x12 DIN 7500 (not ilustrated)	0	99999999999999999
610	017051	Hexagon screw M6x12 DIN 933 (not illustrated)	0	99999999999999999
620	021504	Hexagon screw M6x45 DIN933	0	99999999999999999
630	015134	Hexagon screw M8x16 DIN 933	0	99999999999999999
640	017086	Hexagon screw M8x20 DIN 933 (not illustrated)	0	99999999999999999
650	031258	Cable	0	99999999999999999
660	031261	Cable pulley	0	99999999999999999
670	031096	Countersinking screw M4x20 DIN965 gv KS (not illustrated)	0	99999999999999999
680	016727	Lock nut M5	0	99999999999999999
690	016171	Locking ring Ø20x1.2	0	99999999999999999
700	006897	Lock washer Ø 6	0	99999999999999999
710	045949	Sieve with eye	0	99999999999999999
725	005043	Base for relay	0	99999999999999999
730	045952	Clamping piece for cable	0	99999999999999999
740	009546	Spring lock	0	99999999999999999
750	050869	Spur gear M2 Z36	0	99999999999999999
760	045771	Spur gear M2 Z45	0	99999999999999999
770	003208	Grommet 10x17.5x1.2	0	99999999999999999
780	013749	Union nut 3/8"	0	99999999999999999
790	006351	Union nut ML8 GV	0	99999999999999999
800	048986	Pellet container cladding	0	99999999999999999
810	050887	BIO91 Reserve supply container Klassik, without motor	0	99999999999999999
820	050888	BIO92 Reserve supply container Premium, without motor	0	99999999999999999
830	050379	Water tank	0	99999999999999999
840	048903	Shaft seal ring DIN 3760AS AD52 ID20	0	99999999999999999
850	045946	Cyclone cover for BioWIN2 to 1.02.2015	0	99999999999999999
850	053466	Cyclone cover	0	99999999999999999
860	019836	Cylinder screw 2.9x16 (not illustrated)	0	99999999999999999
870	018139	Cylinder screw 4.2x13 DIN7981SP (not illustrated)	0	99999999999999999
880	016768	Cylinder screw M3x5	0	99999999999999999
890	052474	Cladding door	0	99999999999999999
900	051779	Cover	0	99999999999999999
910	051755	CoverPB BioWIN2	0	99999999999999999

Item no.	Article no.	Description	Serialnumber from	Serialnumber to
920	051754	Maintenance cover BioWIN2	0	99999999999999999
930	001760	Magnetic lock, black - VW, LWP18-50, LWK	0	99999999999999999
940	000299	Silicone buffer	0	99999999999999999
950	004237	Cylinder screw M5x10 ISO 4762 (not illustrated)	0	99999999999999999
960	051753	Door mounting, bottom	0	99999999999999999
970	009990	Leg M10 x 40	0	99999999999999999
980	051773	Magnetic sheet	0	99999999999999999
985	052482	Suction pipe	0	99999999999999999
990	051775	BIO83 side panel	0	99999999999999999
990	051776	BIO82 side panel	0	99999999999999999
1000	051771	Water tank support	0	99999999999999999
1010	051614	Pedestal	0	99999999999999999
1020	051781	Left side panel, grey	0	99999999999999999
1030	051752	Door mounting, top	0	99999999999999999
1040	012600	Gas spring 4534DS 0100 N	0	99999999999999999
1050	044802	Southco hinge	0	99999999999999999
1060	051751	L-bracket	0	99999999999999999
1070	051783	Pellet container cover	0	99999999999999999

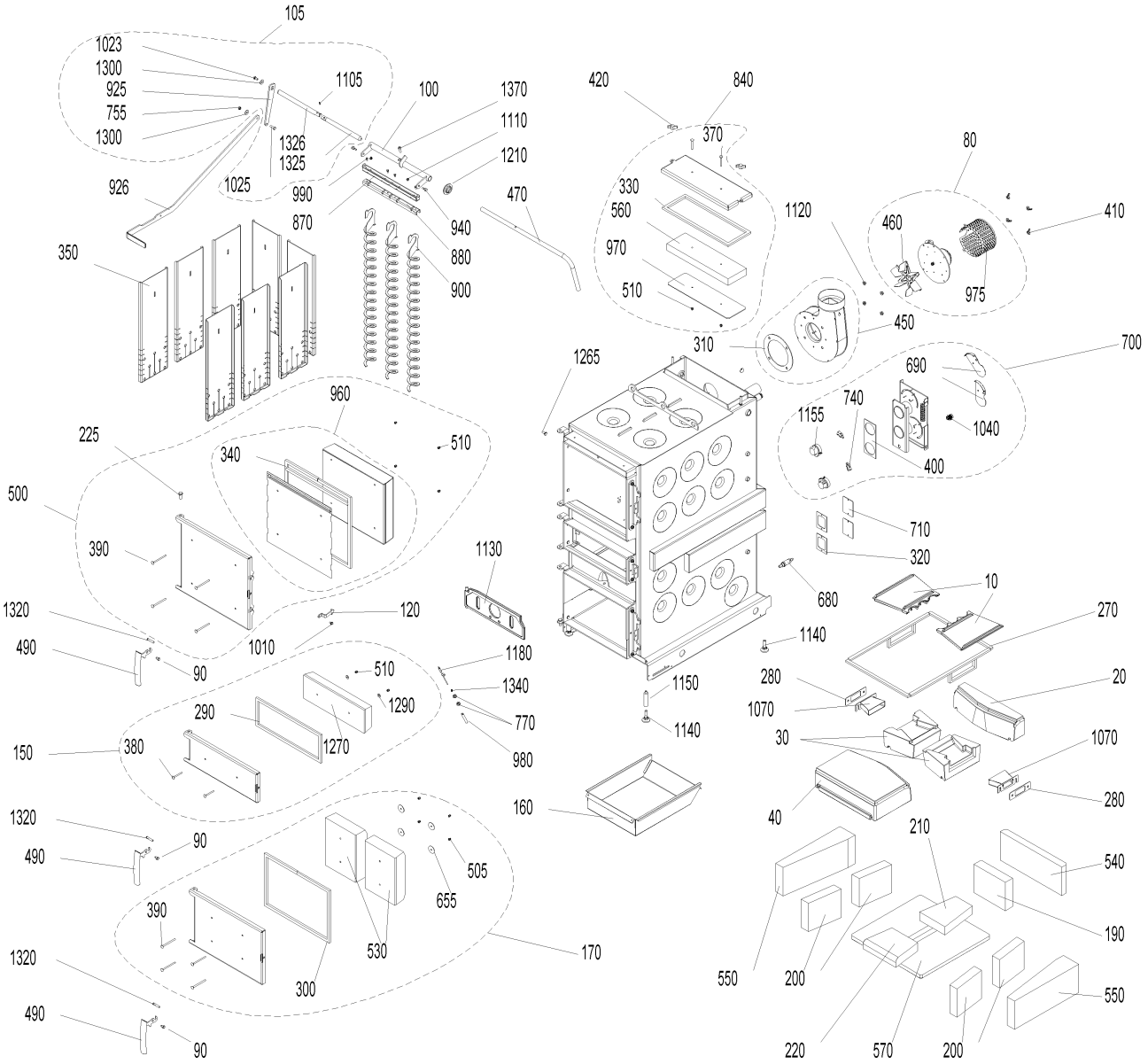
105
1023
1300
925
755
1300
1105
100
1370
1110
1210
1326
1325
1025
926
990
870
940
880
900
470
350
420
840
370
330
560
970
510
1120
80
460
410
975
450
310
1265
700
690
740
1155
1040
400
960
225
340
510
500
390
1130
710
320
680
10
270
1320
120
490
1010
90
1180
1140
510
1340
1150
280
20
1070
290
1290
770
1140
30
1070
150
380
1270
980
160
40
280
1320
90
490
505
655
210
540
390
530
170
190
1320
300
550
200
550
490
90
220
570
200

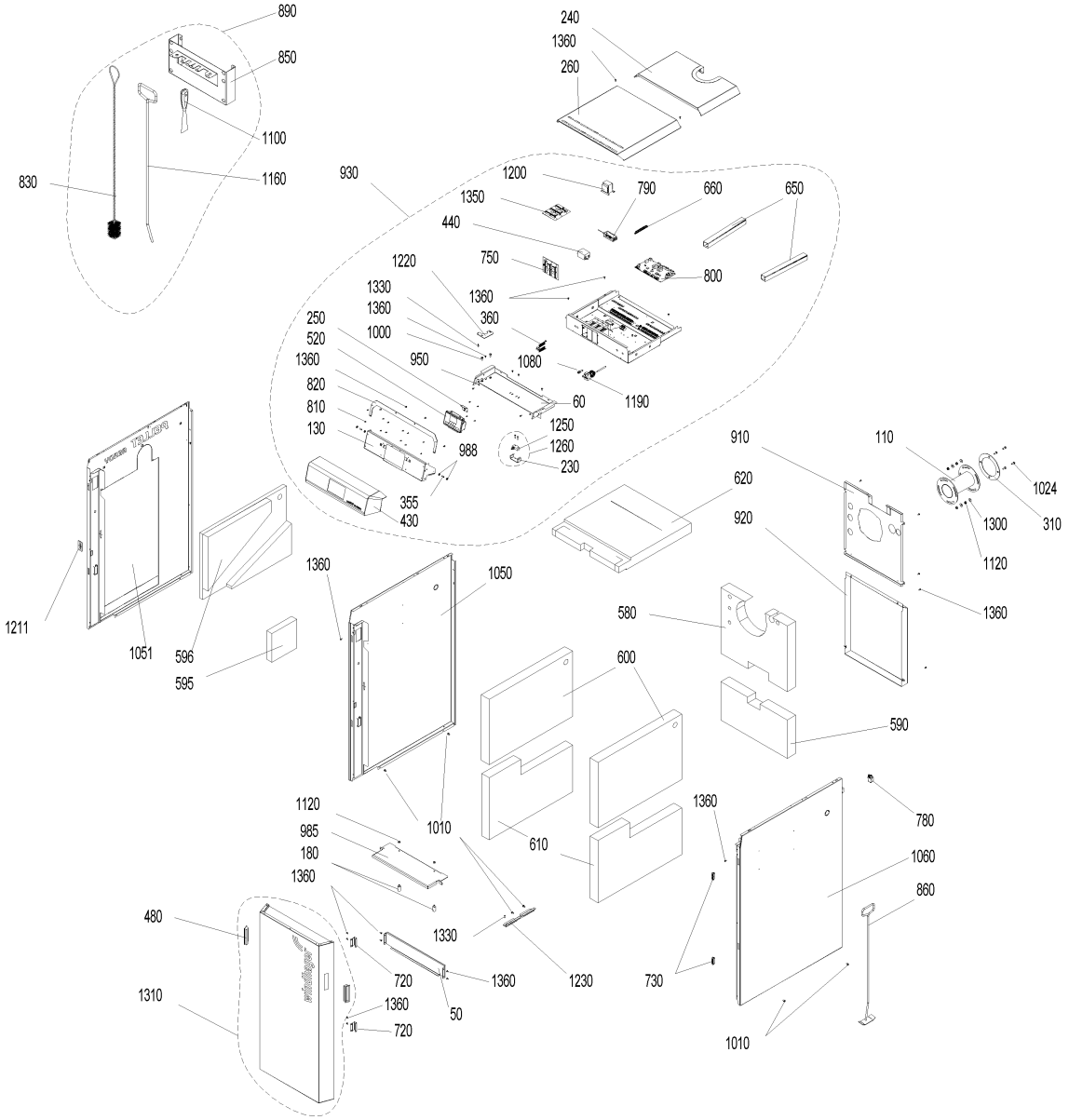
890
850
1100
1160
830
240
1360
260
930
1200
1350
790
660
650
440
750
800
1220
1330
1360
1360
360
250
520
1000
1360
950
1080
820
810
130
60
1190
1250
1260
230
988
355
430
910
110
1024
620
1300
310
920
1120
1360
1211
1051
596
595
1360
1050
580
600
590
1120
985
180
1360
1010
610
1360
780
1060
860
480
1330
720
1360
1230
730
1310
1360
50
720
1010

Item no.	Article no.	Description	Serialnumber from	Serialnumber to
10	007392	Burning plate LWP/LWK	0	99999999999999999
20	007397	Rear burning stone	0	99999999999999999
30	007388	Burning stone left/right LWK/LWP	0	99999999999999999
40	007377	Front burning stone	0	99999999999999999
50	051223	Sensor cover	0	99999999999999999
60	050808	Cover insulation	0	99999999999999999
70	504195	JW-010 Flue gas sensor set with protective pipe	0	99999999999999999
80	051661	Flue gas blower, complete for LWK	0	99999999999999999
90	048881	Axle for door handle CK45	0	99999999999999999
100	046328	Axle for cleaning heating surfaces	0	99999999999999999
105	052463	Axle for cleaning heating surfaces - LogWIN Klassik pellet ready	0	99999999999999999
110	503650	LWKAD1 Adapter for continuously adjustabel flue connection, left or right	0	99999999999999999
120	051244	Safety hook	0	99999999999999999
130	051307	Inside display panel	0	99999999999999999
150	051564	Lighting door, complete	0	99999999999999999
160	045419	Ash pan LWP18-50, LWK	0	99999999999999999
170	051563	Ash door, complete LWK	0	99999999999999999
180	051241	Fastener for carburisation gas duct LWK	0	99999999999999999
190	007383	Rear combustion chamber stone LWP18-30, LWK	0	99999999999999999
200	051233	Combustion chamber stone left/right LWK	0	99999999999999999
210	007384	Bottom rear combustion chamber stone LWP18-30	0	99999999999999999
220	007385	Bottom front combustion chamber stone LWP18-30	0	99999999999999999
225	033104	Door mounting bolt ISO 2341-A - 12x32	0	99999999999999999
230	045820	Door switch clip LWP / LWK	0	99999999999999999
240	051228	Rear cover LWK	0	99999999999999999
250	051297	InfoWIN cover LWK	0	99999999999999999
260	051226	Front cover LWK	0	99999999999999999
270	046119	Rope seal kit for burning stones LWP18-30	0	99999999999999999
280	007391	Seal for secondary air nozzle LWP180-305	0	99999999999999999
290	046267	Lighting door seal LWP18-50, LW	0	99999999999999999
300	046268	Ash door seal LWP18-50, LWK	0	99999999999999999
310	050825	Blower seal LWK	0	99999999999999999
320	009378	Seal for vent cover LWP18-50, LWK	0	99999999999999999
330	051567	Seal for cleaning cover LWK	0	99999999999999999
340	051568	Heating door seal set LWK	0	99999999999999999
350	051569	Hook-in plate LWK	0	99999999999999999
355	051836	Spring-loaded pressure piece M8	0	99999999999999999
360	003726	InfoWIN ribbon cable	0	99999999999999999
370	016178	Round-head screw M6x55	0	99999999999999999
380	016186	Round-head screw M6x60	0	99999999999999999
390	016190	Round-head screw M6x90	0	99999999999999999
400	009305	Flange seal LWP18-50, LWK	0	99999999999999999
410	019410	Wing nut M6	0	99999999999999999
420	007366	Wing nut M8	0	99999999999999999
430	051559	Front control pane LWK	0	99999999999999999
440	007649	Radio interference filter LWP18-50, LWK	0	99999999999999999
450	051577	Blower box, complete LWK	0	99999999999999999
460	053032	Blower wheel	0	99999999999999999
470	045447	Handle for cleaning heating surfaces for LogWIN Premium 180-305	0	99999999999999999
480	051237	Handle recess LWK	0	99999999999999999
490	048811	Boiler handle	0	99999999999999999

Item no.	Article no.	Description	Serialnumber from	Serialnumber to
500	051579	Heating door, complete LWK	0	99999999999999999
505	016192	Cap nut	0	99999999999999999
510	025968	Cap nut M6	0	99999999999999999
520	009879	InfoWIN plus F4 LWK, BioWIN2	0	99999999999999999
530	050585	Insulating stone AT LWK	0	99999999999999999
540	007380	Rear insulating stone for LogWIN Premium 180-305	0	99999999999999999
550	051234	Insulating stone left/right LWK	0	99999999999999999
560	050542	Insulating stone for cleaning cover LWK	0	99999999999999999
570	051236	Bottom insulating stone LWK	0	99999999999999999
580	051217	Top rear insulation LWK	0	99999999999999999
590	051216	Bottom rear insulation LWK	0	99999999999999999
595	007251	Left insulation - LogWIN Klassik pellet ready	0	99999999999999999
596	007250	Top left insulation - LogWIN Klassik pellet ready	0	99999999999999999
600	051214	Top left/right insulation	0	99999999999999999
610	051222	Bottom left/right insulation	0	99999999999999999
620	051215	Top front insulation	0	99999999999999999
630	007165	Lambda sensor cable (not illustrated)	0	99999999999999999
640	048419	Draught fan cable (not illustrated)	0	99999999999999999
650	050837	Cable duct	0	99999999999999999
655	016191	Washer M6 4x40x1,5	0	99999999999999999
660	009928	Terminal bar	0	99999999999999999
680	051646	Lambda sensor	0	99999999999999999
690	040032	Air choke	0	99999999999999999
700	045460	Air control, complete	0	99999999999999999
710	046338	Vent cover	0	99999999999999999
720	051157	Magnet retainer	0	99999999999999999
730	001760	Magnetic lock, black - VW, LWP18-50, LWK	0	99999999999999999
740	009277	Air control microswitch	0	99999999999999999
750	048754	Module connection PCB	0	99999999999999999
755	015992	Nut M8 DIN 934 V2 - LogWIN Klassik pellet ready	0	99999999999999999
770	031156	Hexagon nut M10 DIN 439	0	99999999999999999
780	041430	Mains connection socket 3-pin for MIRA,ETX,PMX,BioWIN10-26,LogWIN Premium 180-505,EasyWIN Premium 180,BioWIN XL 35-60, FireWIN	0	99999999999999999
790	051645	Power supply unit 12V	0	99999999999999999
800	011999	FMF PCB for LogWIN Premium 180-505	0	99999999999999999
810	051308	PT®- oval head screw	0	99999999999999999
820	051301	Pos.plate LWK	0	99999999999999999
830	003088	GWX992 Cleaning brush 950x45mm/45x70 mm for GWX, LogWIN Premium 180-505, EasyWIN Klassik/Premium 180	0	99999999999999999
840	051663	Cleaning cover LWK	0	99999999999999999
850	042743	Holder for cleaning equipments for VarioWIN, LogWIN Premium 180-505,SilvaWIN,BioWIN XL35-60,EasWIN Klassik/Premium 180	0	99999999999999999
860	040328	Cleaning rake for HMX,PMX, EasyWIN Klassik/Premium 180, LogWIN Premium 180-505	0	99999999999999999
870	046325	Top cleaning profile for LogWIN Premium 180-305	0	99999999999999999
880	046323	Bottom cleaning profile for LogWIN Premium 180-305	0	99999999999999999
890	502843	EWK020 Cleaning kit consisting of: cleaning brush, poker, spatula, hanger	0	99999999999999999
900	046322	Cleaning auger for LogWIN Premium 180-505	0	99999999999999999
910	050838	Top rear panel LWK	0	99999999999999999
920	050839	Bottom rear panel LWK	0	99999999999999999
925	052212	Shaker lever	0	99999999999999999
926	052202	Handle for cleaning heating surfaces - LogWIN Klassik pellet ready	0	99999999999999999
930	051134	LWK03 LOGWIN KLASSIK - SWITCH COVER	0	99999999999999999
940	006756	Screw M6 for heating surface cleaning for PMX,BioWIN 10-26,FireWIN, BioWIN XL 35-60, LogWIN Premium 180-505	0	99999999999999999
950	033528	Cylinder screw M 4 x 6 - 8.8	0	99999999999999999

Item no.	Article no.	Description	Serialnumber from	Serialnumber to
960	053240	Heating door protection plate LWK	0	99999999999999999
970	051666	Cleaning cover protection plate LWK	0	99999999999999999
975	010882	Flue gas blower protection hood LWK	0	99999999999999999
980	051231	Thermocontrol sensor protective tube LWK	0	99999999999999999
985	051230	Carborisation gas duct LWK	0	99999999999999999
988	016659	Hexagon nut M8 DIN434	0	99999999999999999
990	031545	Hexagon screw M5x12 DIN 7500 (not ilustrated)	0	99999999999999999
1000	015471	Hexagon screw M6x20 DIN 933	0	99999999999999999
1010	031549	Hexagon screw M6x12 DIN 7500	0	99999999999999999
1020	017882	Thread-rolling hexagon screw DIN 7500 - M8x16 TT - galvanised for VarioWIN, EasyWIN Klassik/Premium 180	0	99999999999999999
1023	016721	Hexagon screw M8x16 DIN 933	0	99999999999999999
1024	017086	Hexagon screw M8x20 DIN 933 (not illustrated)	0	99999999999999999
1025	017191	Hexagon screw M8x25 DIN 933	0	99999999999999999
1030	017046	Cyl. screw M 8X30	0	99999999999999999
1040	017205	Hexagon screws M12x25-8.8	0	99999999999999999
1050	051667	Side wall left LWK	0	99999999999999999
1051	052390	Side wall left LWK Pellet ready	0	99999999999999999
1060	051668	Side wall right LWK	0	99999999999999999
1070	045326	Secondary air nozzle complete for LogWIN Premium 180-305	0	99999999999999999
1075	003228	6.3A fuse (not illustrated)	0	99999999999999999
1080	003663	Fuse holder	0	99999999999999999
1090	016073	WERV013 Silicone seal, black 310ml	0	99999999999999999
1100	009540	Spatula	0	99999999999999999
1105	018184	Clamping pin DIN 1481 - Ø 5x14 for VarioWIN	0	99999999999999999
1110	016566	Hexagon nut with flange and gearing M6	0	99999999999999999
1120	016553	Hexagon nut M8 with flange and gearing	0	99999999999999999
1130	051162	Vertical grate LWK/LWP	0	99999999999999999
1140	009994	Foot M12X40 JTB38 for HMX, EasyWIN Klassik/Premium 180, LogWIN Premium 180-505	0	99999999999999999
1150	007453	Leg extension for LogWIN Premium 180-505, EasyWIN Klassik/Premium 180	0	99999999999999999
1155	040429	Servomotor for HMX, SilvaWIN, LogWIN Premium 180-505	0	99999999999999999
1160	080664	FAX192 Poker for FAX,HMX,SilvaWIN,FKX,EasyWIN Klassik/Premium 180,LogWIN Premium 180-505	0	99999999999999999
1170	009982	Immersion sensor 1,3m LWK	0	99999999999999999
1180	007626	Thermocouple	0	99999999999999999
1190	005672	Thermostat LS1+100-6U	0	99999999999999999
1200	007096	Transformer for O2 sensor 18VA for LogWIN Premium 180-505	0	99999999999999999
1210	048812	Grommet for EasyWIN, LogWIN Premium 180-505	0	99999999999999999
1211	052208	Seal	0	99999999999999999
1220	051220	Top door hinge LWK	0	99999999999999999
1230	050783	Bottom door hinge LWK	0	99999999999999999
1250	007128	Microswitch Z-15GQ-B for LogWIN Premium 180-505, BioWIN XL 35-60	0	99999999999999999
1260	046072	Door switch complete for LogWIN Premium 180-505	0	99999999999999999
1265	051671	Door screw M8	0	99999999999999999
1270	050590	Door stone for lighting door LWK	0	99999999999999999
1290	031753	Disc 6 ISO 7093	0	99999999999999999
1300	031755	Disc 8 ISO 7093	0	99999999999999999
1310	050780	Cladding door, complete	0	99999999999999999
1320	050568	Locking axle LWK	0	99999999999999999
1325	052207	Shaft 1 or cleaning heating surfaces - LogWIN Klassik pellet ready	0	99999999999999999
1326	052211	Shaft 2 or cleaning heating surfaces - LogWIN Klassik pellet ready	0	99999999999999999
1330	015507	Dog point screw	0	99999999999999999
1340	007164	Tension spring	0	99999999999999999

Item no.	Article no.	Description	Serialnumber from	Serialnumber to
1350	007095	Extra PCB for O2-mesure or pumping rotation speed control for BioWIN cascade, LogWIN Premium 180-505	0	99999999999999999
1360	018140	Cylinder screw 4.2x13 DIN7981ST (not illustrated)	0	99999999999999999

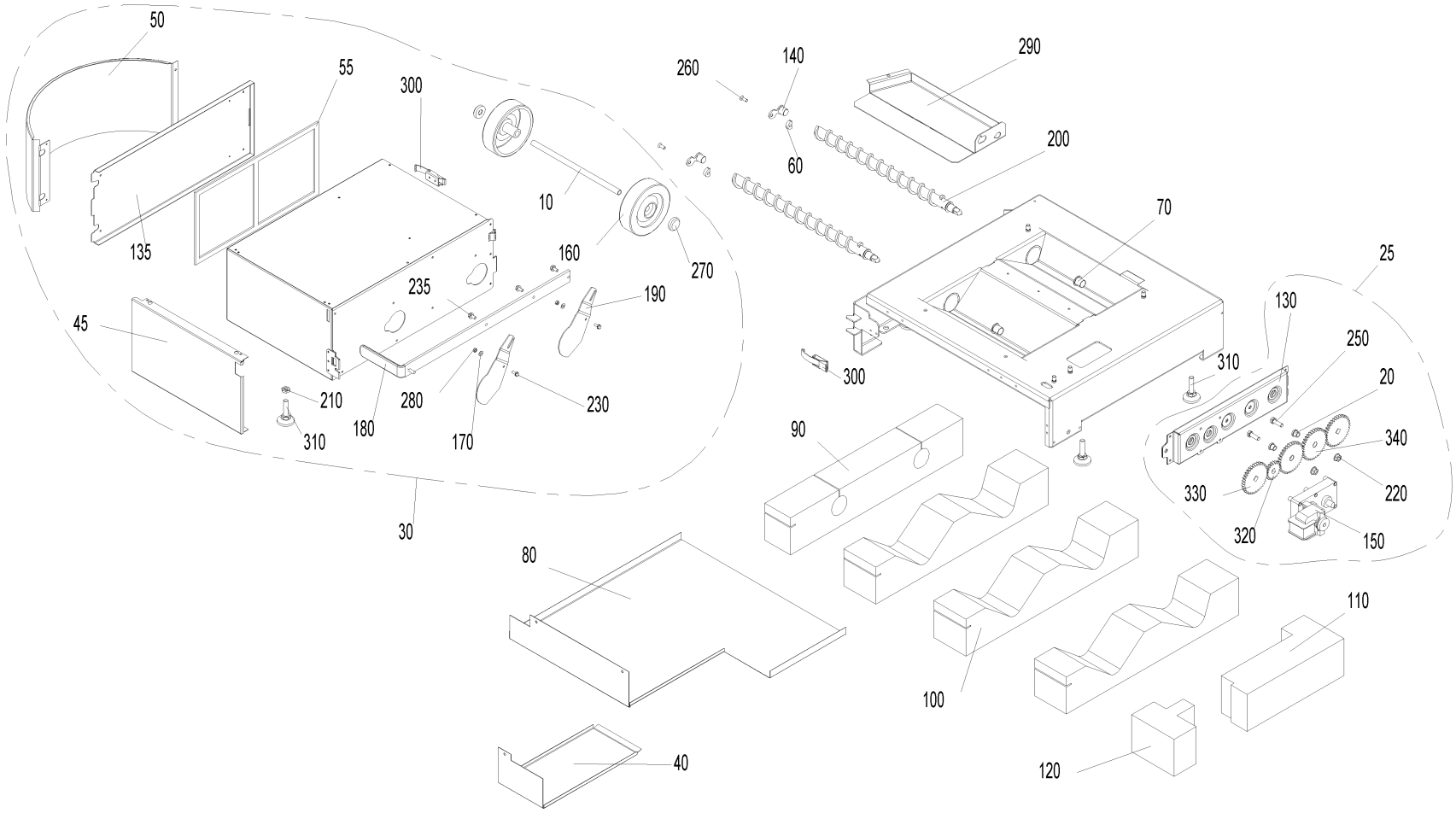
50
55
300
135
10
160
270
235
190
45
210
310
180
280
170
230
30
260
140
290
60
200
70
300
310
25
130
250
20
340
330
220
320
150
90
80
100
110
40
120

Item no.	Article no.	Description	Serialnumber from	Serialnumber to
10	051379	Ash box axle	0	99999999999999999
20	006745	Ash conveyor bearing bush	0	99999999999999999
25	054418	Ash removal, completely pre- mounted, BioWIN2	0	99999999999999999
30	051262	BIO90 Ash box, cpl	0	99999999999999999
40	051125	Cover for ash conveyor motor	0	99999999999999999
45	051633	Ash box lid	0	99999999999999999
50	051637	Ash box lid curve	0	99999999999999999
55	046665	Container seal	0	99999999999999999
60	048573	Distance	0	99999999999999999
70	012508	Friction bearing with connector	0	99999999999999999
80	051124	Cup insulation	0	99999999999999999
90	051126	Ash pipe insulation	0	99999999999999999
100	051127	Ash chamfer insulation	0	99999999999999999
110	051128	Motor insulation, rear	0	99999999999999999
120	051129	Motor insulation, front	0	99999999999999999
130	048572	Ash conveyor bracket	0	99999999999999999
135	051635	Ash box flap	0	99999999999999999
140	051120	Auger bearing	0	99999999999999999
150	044665	Motor	0	99999999999999999
160	006888	Wheel AG 125-12	0	99999999999999999
170	018309	Disc 5 DIN134	0	99999999999999999
180	051389	Ash box scraper	0	99999999999999999
190	050686	Sliding plate	0	99999999999999999
200	051542	Auger	0	99999999999999999
210	031156	Hexagon nut M10 DIN 439	0	99999999999999999
220	016553	Hexagon nut M8 with flange and gearing	0	99999999999999999
230	031545	Hexagon screw M5x12 DIN 7500 (not ilustrated)	0	99999999999999999
235	031549	Hexagon screw M6x12 DIN 7500	0	99999999999999999
240	017086	Hexagon screw M8x20 DIN 933 (not illustrated)	0	99999999999999999
250	017191	Hexagon screw M8x25 DIN 933	0	99999999999999999
260	016863	Countersinking screw M6x16	0	99999999999999999
270	006889	Washer Ø12	0	99999999999999999
280	016727	Lock nut M5	0	99999999999999999
290	050692	Ash box base	0	99999999999999999
300	009546	Spring lock	0	99999999999999999
310	009990	Leg M10 x 40	0	99999999999999999
320	047543	Spur gear M2 Z20	0	99999999999999999
330	050869	Spur gear M2 Z36	0	99999999999999999
340	048566	Spur gear M2 Z36 Ø12	0	99999999999999999

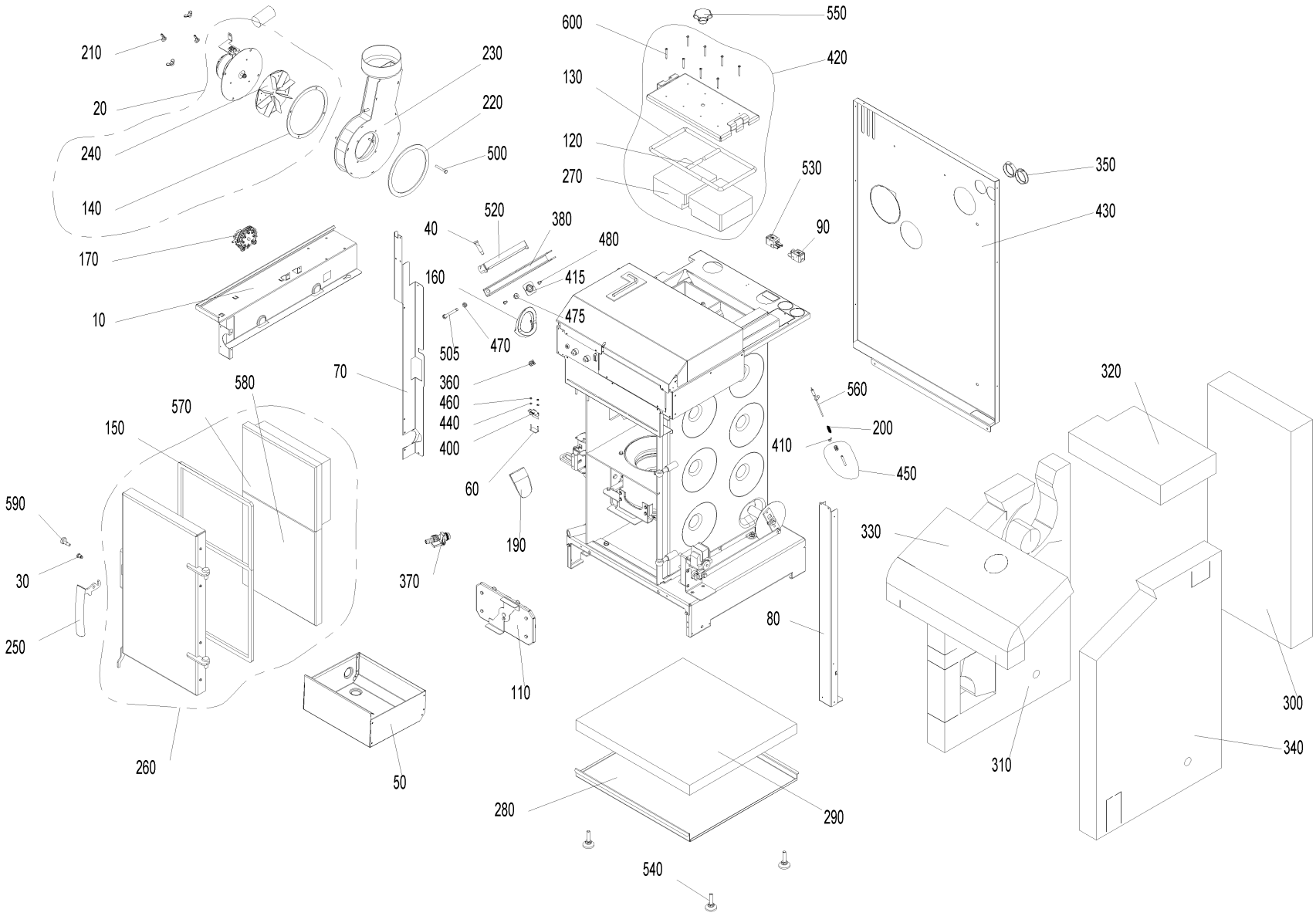
210
20
240
140
170
10
230
220
500
520
40
380
480
160
415
475
505
470
70
360
460
440
400
60
190
370
580
570
150
590
30
250
260
50
110
600
550
420
130
120
270
530
90
350
430
560
200
410
450
320
330
80
310
300
340
280
290
540

Item no.	Article no.	Description	Serialnumber from	Serialnumber to
10	050918	Cover plate	0	99999999999999999
20	053010	Flue gas blower	0	99999999999999999
30	048881	Axle for door handle CK45	0	99999999999999999
40	013813	Collar screw	0	99999999999999999
50	048928	Ash pan	0	99999999999999999
60	051045	Fastened microswitch, complete	0	99999999999999999
70	051109	Cover, left	0	99999999999999999
80	048609	Cover, right	0	99999999999999999
90	070324	Socket, 3-pin, black	0	99999999999999999
110	051056	Coasting surface cover, complete	0	99999999999999999
120	051040	Sealing cord, short	0	99999999999999999
120	051041	Sealing cord, short	0	99999999999999999
130	051017	Sealing cord for cleaning cover	0	99999999999999999
130	051034	Sealing cord for cleaning cover	0	99999999999999999
140	051006	Blower box seal	0	99999999999999999
150	048916	Heating door seal	0	99999999999999999
160	048926	Auger tube seal	0	99999999999999999
170	045404	Differential pressure watchdog	0	99999999999999999
190	048921	Down chute	0	99999999999999999
200	050647	Combustion chamber sensor spring	0	99999999999999999
210	019410	Wing nut M6	0	99999999999999999
220	051005	Blower seal	0	99999999999999999
230	053234	Blower box for BioWIN102-262	0	99999999999999999
240	052951	Blower wheel Ø160 x 25 for BioWIN2 102 - 262	0	99999999999999999
250	007480	Boiler handle	0	99999999999999999
260	051545	Heating door cpl. mounted	0	99999999999999999
270	050636	Insulating stone for cleaning cover	0	99999999999999999
270	051007	Insulating stone for cleaning cover	0	99999999999999999
280	048863	Cup insulation 10-26 K BW2	0	99999999999999999
290	048864	Floor insulation	0	99999999999999999
300	051116	Rear insulation	0	99999999999999999
310	051119	Left insulation	0	99999999999999999
320	048910	Coasting surface insulation	0	99999999999999999
330	048911	Top insulation	0	99999999999999999
340	050924	Right insulation	0	99999999999999999
350	004096	Cable feed-through 2400 black Ø50	0	99999999999999999
360	051112	Cage nut M8	0	99999999999999999
370	004385	KFE cock	0	99999999999999999
380	048611	Pellet container clamp	0	99999999999999999
400	007632	Microswitch with lever	0	99999999999999999
410	031274	Eyelet M6	0	99999999999999999
415	052484	Platelet flanged nut	0	99999999999999999
420	048870	Cleaning cover, complete	0	99999999999999999
420	050477	Cleaning cover, complete	0	99999999999999999
430	050916	Rear wall	0	99999999999999999
440	021474	Disc 3 DIN134	0	99999999999999999
450	051069	Protective tube for combustion chamber sensor, complete	0	99999999999999999
460	016551	Hexagon nut M3 DIN 934	0	99999999999999999
470	015992	Nut M8 DIN 934 V2 - LogWIN Klassik pellet ready	0	99999999999999999
475	016553	Hexagon nut M8 with flange and gearing	0	99999999999999999
480	031545	Hexagon screw M5x12 DIN 7500 (not ilustrated)	0	99999999999999999

Item no.	Article no.	Description	Serialnumber from	Serialnumber to
500	021504	Hexagon screw M6x45 DIN933	0	99999999999999999
505	016461	Hexagon screw M8x80 DIN 933	0	99999999999999999
520	048975	Clamping rail	0	99999999999999999
530	070323	Plug, 3-pin, black	0	99999999999999999
540	009990	Leg M10 x 40	0	99999999999999999
550	005125	Star handle M12 x 35	0	99999999999999999
560	007626	Thermocouple	0	99999999999999999
570	048914	Door stone	0	99999999999999999
580	050447	Bottom door stone	0	99999999999999999
590	051004	Locking pin	0	99999999999999999
600	016719	Cylinder drilling screw 4.2 x 38 DIN7504	0	99999999999999999

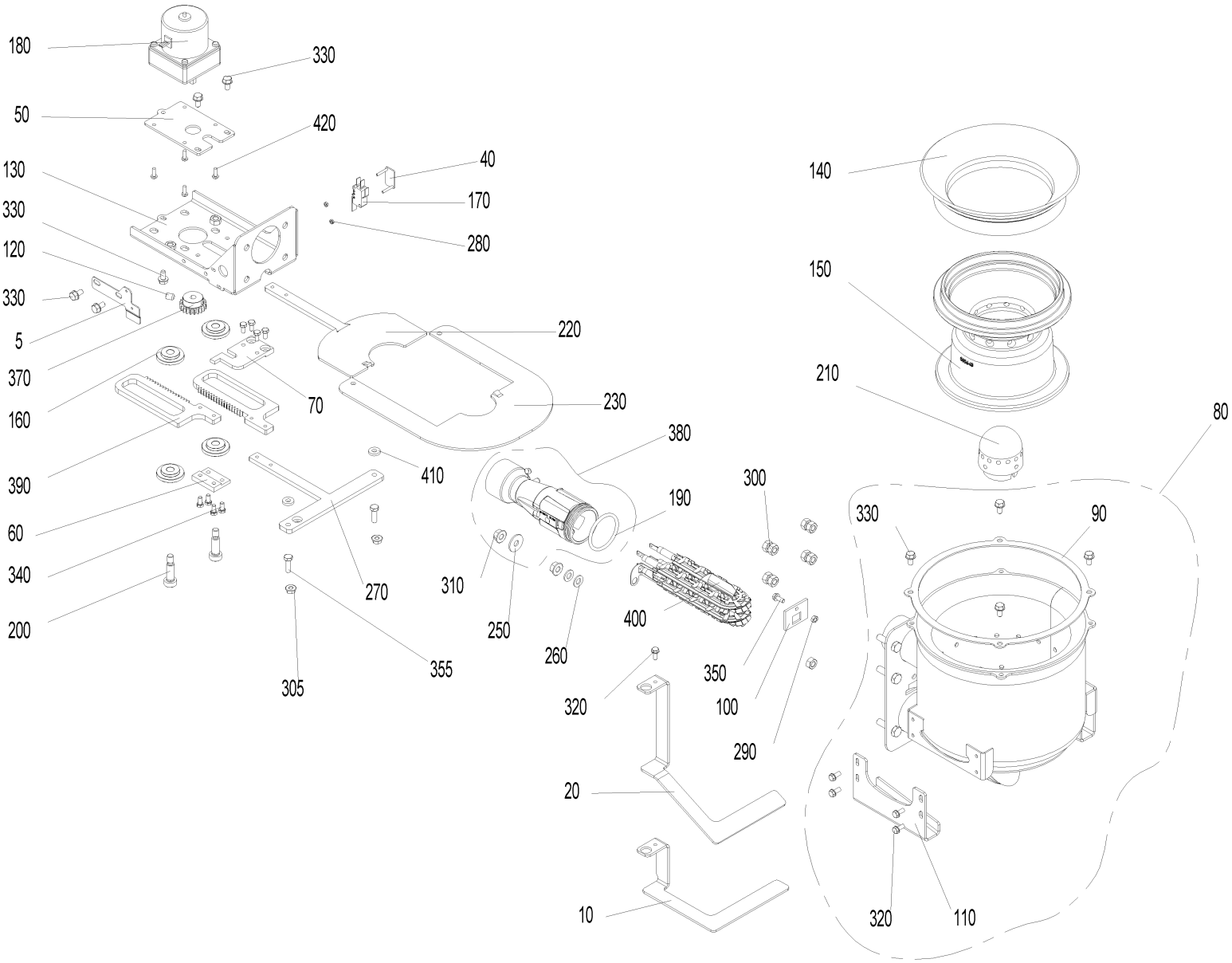
180
330
50
420
130
40
170
330
280
120
330
5
220
370
70
230
160
380
390
410
300
190
60
340
270
310
250
400
200
260
350
305
355
320
100
290
20
10
140
150
210
80
330
90
320
110

Item no.	Article no.	Description	Serialnumber from	Serialnumber to
5	053544	Stop plate		
10	051048	Ash stop plate, Klassik, Premium		
20	051046	Microswitch fastening		
40	051045	Fastened microswitch, complete		
50	050632	Bracket mounting plate		
60	050649	Mounting plate		
70	051042	Mounting plate, top		
80	051065	Burner		
90	048861	Burner seal		
100	048841	Driving rod feed-through		
110	048842	Grate plate guide		
120	033112	Setscrew M8x10 DIN916		
125	053643	Cable - ignition element for BW1, BW2, FireWIN and VarioWIN		
130	050639	Shake-out bracket		
140	050642	Cone, top part 45°		
150	048941	Cone, bottom part for BioWIN2 21/26		
160	007125	Bearing for vibrating drive		
170	007632	Microswitch with lever		
180	012561	Shake-out motor		
190	006849	O-ring FPM70 45 x 4		
200	017048	Shoulder screw M8 10x25 ISO 7379		
210	047774	Primary air pin for BioWIN10-26 FireWIN bis Los9 und PMX 21-26		
220	051051	Grate plate, left		
230	053539	Grate plate, right		
240	021474	Disc 3 DIN134		
250	031755	Disc 8 ISO 7093		
260	024779	Disc 8 ISO 7089		
270	051023	Grate plate scraper		
280	016551	Hexagon nut M3 DIN 934		
290	017035	Hexagon nut M5 DIN 934		
300	031153	Hexagon nut M8 DIN 934		
305	016566	Hexagon nut with flange and gearing M6		
310	016553	Hexagon nut M8 with flange and gearing		
320	031545	Hexagon screw M5x12 DIN 7500 (not ilustrated)		
330	031549	Hexagon screw M6x12 DIN 7500		
340	016756	Hexagon screw M5x10 DIN 933		
355	015471	Hexagon screw M6x20 DIN 933		
370	007222	Spur gear M1,5; Z21		
380	051067	Venturi nozzle		
390	048161	Steering rack BioWin2 10-26		
400	055201	Ignition element BioWIN10-26, FireWIN from lot 15, VarioWIN from lot 15 BioWIN XL, LWK		
402	053851	de: Zündelement inkl. Kabel beigelegt.		
410	051054	Intermediate plate		
420	016780	Cylinder screw M4x12 DIN 7985		

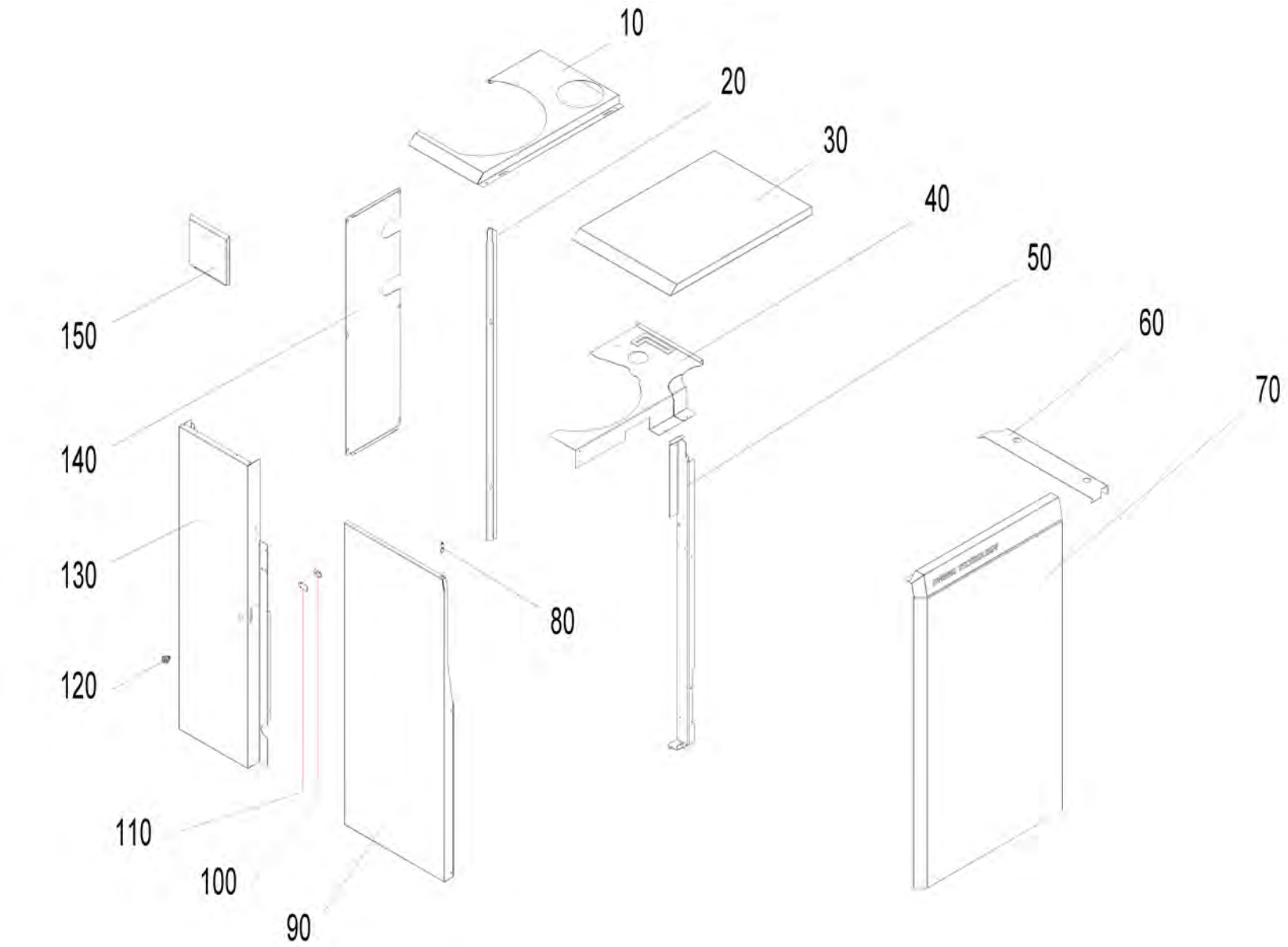
10
20
30
40
50
60
70
80
90
100
110
120
130
140
150

Item no.	Article no.	Description	Serialnumber from	Serialnumber to
10	051901	Cover pellets storage side for BioWin2-DuoWin	0	99999999999999999
20	051883	Angle profile rear panel for BioWin2-DuoWin	0	99999999999999999
30	051875	Cover boiler side BioWin2-DuoWin	0	99999999999999999
40	051903	Cover plate control panel for BioWin2-DuoWin	0	99999999999999999
50	051877	Door hinge bracket for BioWin2-DuoWin	0	99999999999999999
60	051872	Angle profile for positioning BioWin2-DuoWin	0	99999999999999999
70	051902	Front panel BioWIN2 - DuoWIN	0	99999999999999999
80	007191	Locking bolt with pull ring GN 717-5-M8-A-ST	0	99999999999999999
90	051899	Cladding door for BioWIN2 - DuoWIN	0	99999999999999999
100	047891	Driver	0	99999999999999999
110	051882	Locking plate for BioWIN2 - DuoWIN	0	99999999999999999
120	012256	Turning bolt	0	99999999999999999
130	051900	Rear left side panel for BioWIN2 - DuoWIN	0	99999999999999999
140	051884	Rear panel for BioWIN2 - DuoWIN	0	99999999999999999
150	051886	Pellet container cover for BioWin2-DuoWin	0	99999999999999999
160	504048	Flue connection DuoWin for pellet boiler	0	99999999999999999

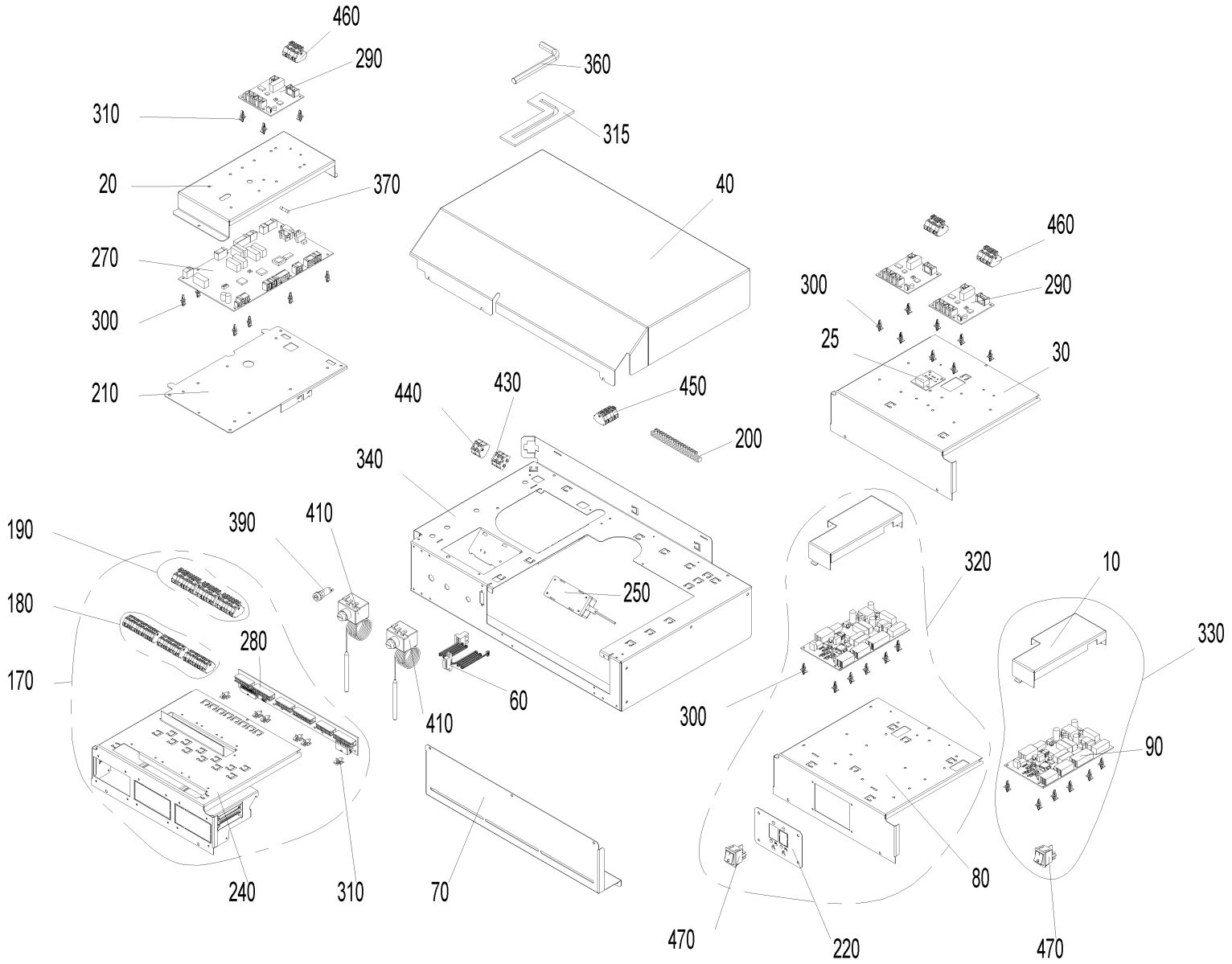
460
290
310
20
370
270
300
210
360
315
40
460
300
290
25
30
440
430
450
200
340
250
190
180
170
390
410
280
60
410
240
310
70
320
10
330
300
90
80
470
220
470

Item no.	Article no.	Description	Serialnumber from	Serialnumber to
10	048750	BUML TTL 2Z cover	0	99999999999999999
20	048955	PCB cover	0	99999999999999999
25	012012	LON connection diagram	0	99999999999999999
30	051382	REG000BW2 External control system cover	0	99999999999999999
40	048618	Control panel cover	0	99999999999999999
60	050970	Ribbon cable, Lon	0	99999999999999999
70	048902	Retaining plate	0	99999999999999999
80	048613	Retaining bracket, REG	0	99999999999999999
90	009767	BUML TTL 2Z interface	0	99999999999999999
100	002059	Power supply cable (not illustrated)	0	99999999999999999
110	050971	Power supply cable OT (not illustrated)	0	99999999999999999
120	043586	Draught fan cable (not illustrated)	0	99999999999999999
130	003719	TTL cable (not illustrated)	0	99999999999999999
140	040333	Wiring harness 12 V (not illustrated)	0	99999999999999999
150	040335	Wiring harness 230 V (not illustrated)	0	99999999999999999
160	040334	Wiring harness AAT HFR (not illustrated)	0	99999999999999999
170	050910	MESBW2 Cable harness	0	99999999999999999
180	051415	Cable harness MES extra-low voltage 12 V	0	99999999999999999
190	051414	Cable harness MES low voltage 230 V	0	99999999999999999
200	009928	Terminal bar	0	99999999999999999
210	050959	Bracket fireing automat	0	99999999999999999
220	048952	Rocker switch bracket	0	99999999999999999
230	018190	Oval-head screw 3.2x16 (not illustrated)	0	99999999999999999
240	051390	Module guide complete	0	99999999999999999
250	051645	Power supply unit 12V	0	99999999999999999
260	005784	Pin connector (not illustrated)	0	99999999999999999
270	011990	PCB, FMP BW2	0	99999999999999999
280	050996	MES PCB	0	99999999999999999
290	011994	PCB board, FMO-J	0	99999999999999999
300	007609	PCB holder	0	99999999999999999
310	007549	PCB holder, Richco	0	99999999999999999
315	051766	Position hexagon pin screwdriver	0	99999999999999999
320	050912	REG 021	0	99999999999999999
330	050913	REG 024	0	99999999999999999
340	048605	Control panel, floor	0	99999999999999999
360	027391	Hexagon pin screwdriver 10 mm DIN 911	0	99999999999999999
370	006900	Fuse 1 A T 5x20 ceramic tube	0	99999999999999999
380	003228	6.3A fuse (not illustrated)	0	99999999999999999
390	003663	Fuse holder	0	99999999999999999
400	007629	Immersion sensor PT 1000 (not illustrated)	0	99999999999999999
405	502186	MES009M Immersion sensor	0	99999999999999999
410	005672	Thermostat LS1+100-6U	0	99999999999999999
415	003208	Grommet 10x17.5x1.2	0	99999999999999999
430	006833	Wago terminal block 261; 4-pin "12V GND"	0	99999999999999999
440	006834	Wago terminal block 261; 4-pin "safety 1-4"	0	99999999999999999
450	007656	Wago terminal block 261; 6-pin	0	99999999999999999
460	010047	Wago terminal block 261; 6-pin extra PCB	0	99999999999999999
470	005563	Rocker switch SW/GR 0-1	0	99999999999999999
480	018140	Cylinder screw 4.2x13 DIN7981ST (not illustrated)	0	99999999999999999

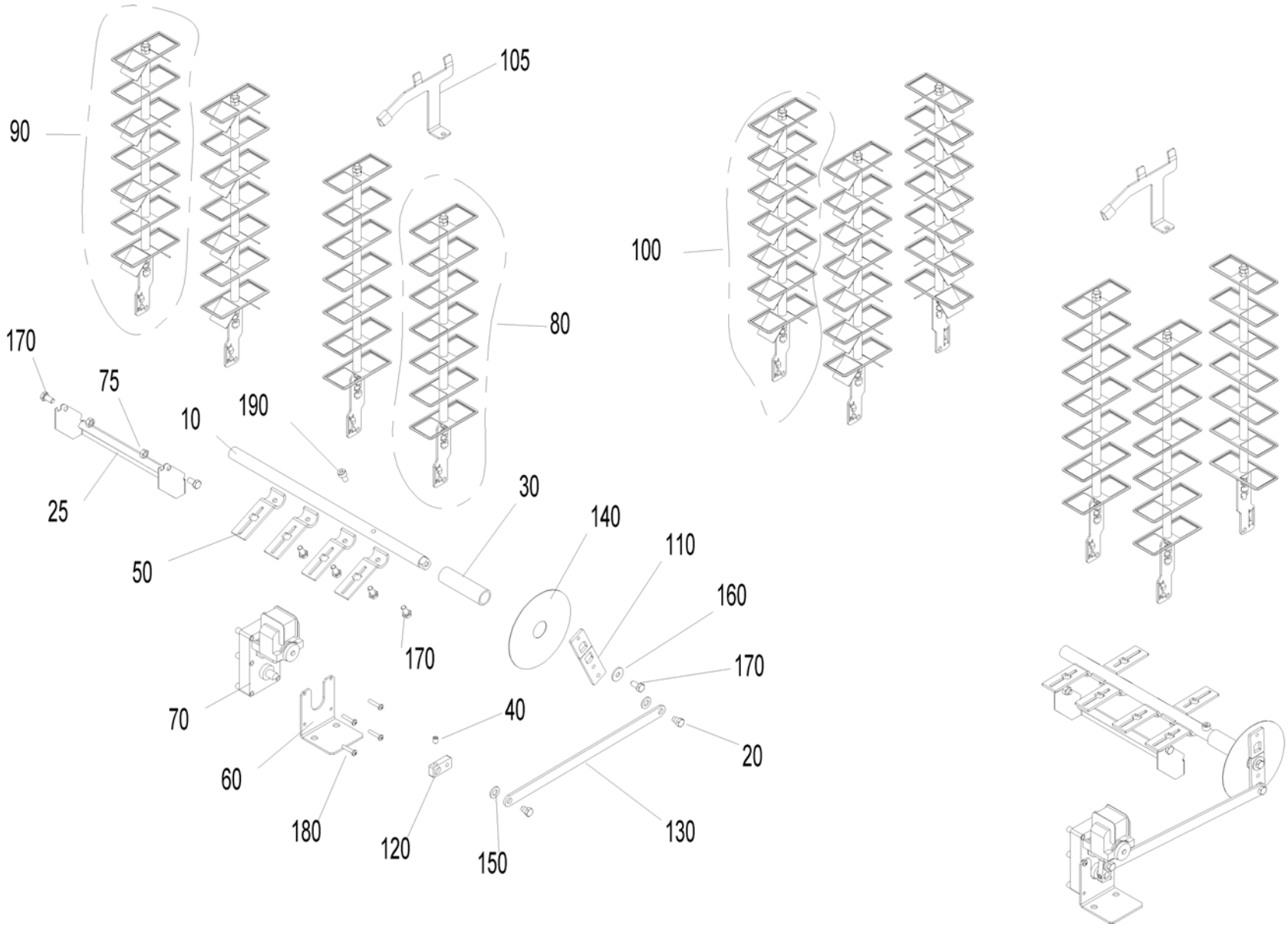
90
105
80
100
170
75
10
190
25
50
30
140
110
160
170
170
70
40
20
60
180
120
150
130

Item no.	Article no.	Description	Serialnumber from	Serialnumber to
10	048882	Axle heating surface BW2 10-26	0	99999999999999999
20	012502	Collar screw	0	99999999999999999
25	051624	Ash sheet	0	99999999999999999
30	048980	Distance rod	0	99999999999999999
40	033112	Setscrew M8x10 DIN916	0	99999999999999999
50	051547	Lever for cleaning heating surfaces	0	99999999999999999
60	051121	L-bracket, motor HFR	0	99999999999999999
70	044665	Motor	0	99999999999999999
75	015992	Nut M8 DIN 934 V2 - LogWIN Klassik pellet ready	0	99999999999999999
80	051609	Clearer flat	0	99999999999999999
90	051610	Clearer flat with turbulator	0	99999999999999999
100	051611	Clearer flat with turbulator	0	99999999999999999
105	051076	Cleaning plate for combustion chamber	0	99999999999999999
110	048884	Shaker lever 1	0	99999999999999999
120	048885	Shaker lever 2	0	99999999999999999
130	051367	Shaker lever 3	0	99999999999999999
140	051122	Disc	0	99999999999999999
150	024780	Disc 10 ISO7089	0	99999999999999999
160	031755	Disc 8 ISO 7093	0	99999999999999999
170	016721	Hexagon screw M8x16 DIN 933	0	99999999999999999
180	016837	Cylinder screw M5x25 ISO 7045	0	99999999999999999
190	016773	Cylinder screw M8x16 ISO 4762	0	99999999999999999

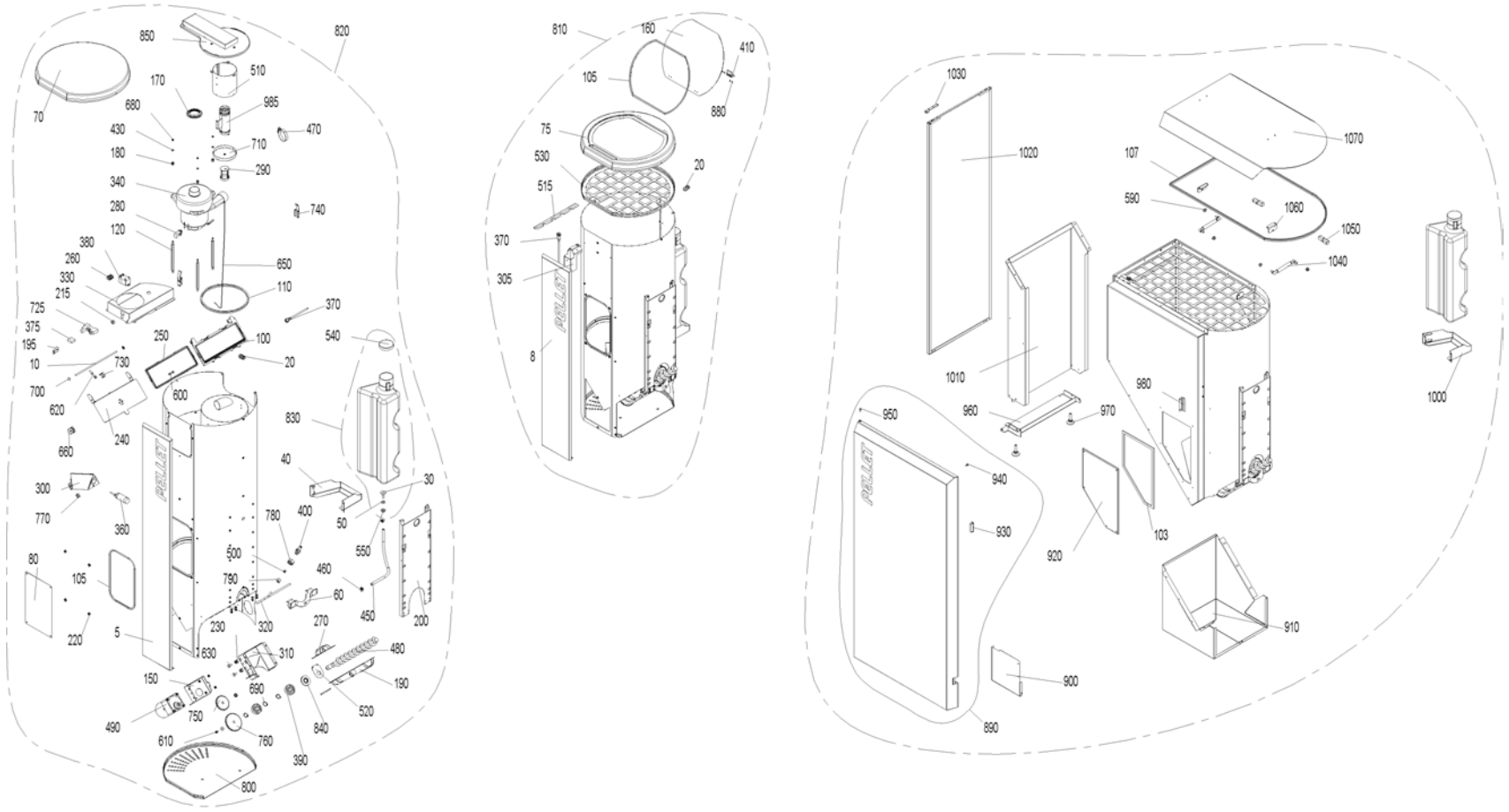
850
820
70
510
170
985
680
470
430
710
180
290
340
740
280
120
380
650
260
330
110
215
370
725
375
250
100
540
195
730
20
10
700
600
620
240
830
660
40
30
300
400
50
770
360
780
550
80
500
460
105
790
60
450
200
220
5
230
320
270
480
630
310
150
190
690
520
490
750
840
610
760
390
800
810
160
410
105
880
75
530
20
515
370
305
8
1030
1020
107
1070
590
1060
1050
1040
1010
980
960
970
1000
950
940
930
920
103
910
900
890

Item no.	Article no.	Description	Serialnumber from	Serialnumber to
5	051749	PB cover plate, grey	0	99999999999999999
8	051758	PB Klassik cover plate, grey	0	99999999999999999
10	042452	Feed axle	0	99999999999999999
20	006340	Mount connections PG9	0	99999999999999999
30	006877	Water connection	0	99999999999999999
40	051107	Water tank support	0	99999999999999999
50	006851	Support plate, motor	0	99999999999999999
60	048974	Fastening bracket	0	99999999999999999
70	050884	Pellet container cover	0	99999999999999999
75	051000	Pellet container cover Klassik	0	99999999999999999
80	050868	Cover reserve supply	0	99999999999999999
100	031254	Seal frame	0	99999999999999999
103	046665	Container seal	0	99999999999999999
105	053465	Reserve supply container seal	0	99999999999999999
107	053467	Seal profile reserve supply container 200 kg	0	99999999999999999
110	042232	Seal section	0	99999999999999999
120	031256	Distance bolt	0	99999999999999999
130	051386	Cheese head screw M5x10 Taptite	0	99999999999999999
140	051387	Cheese head screw M5x10 Taptite, grey	0	99999999999999999
150	051114	Flange, auger motor	0	99999999999999999
160	051001	Filling cover	0	99999999999999999
170	031253	Blower seal	0	99999999999999999
180	009559	Rubber grommet DK 6-9-12-7	0	99999999999999999
190	053540	Half-collar auger tube	0	99999999999999999
195	005077	Bracket	0	99999999999999999
200	048976	Retaining bracket, pellet tank	0	99999999999999999
210	045048	Cable feed with relay	0	99999999999999999
215	009542	Cable feed-through	0	99999999999999999
220	051388	Cage nut M5	0	99999999999999999
230	051112	Cage nut M8	0	99999999999999999
240	045955	Receptacle flap	0	99999999999999999
250	031257	Flap seal	0	99999999999999999
260	000965	Terminal, 3-pin	0	99999999999999999
270	048967	Clamp collar	0	99999999999999999
280	006859	Carbon brushes for blower motor	0	99999999999999999
290	042035	Piston	0	99999999999999999
300	048970	Proximity switch bracket	0	99999999999999999
305	051786	Proximity switch bracket lid	0	99999999999999999
310	048891	Auger motor bracket	0	99999999999999999
320	050867	Back-burn safeguard lead	0	99999999999999999
330	050866	Air duct	0	99999999999999999
340	044667	Blower motor 122151-12 for feed Conversion instructions for use with PMX 15-26 are enclosed! for BioWIN 10-26, PMX,BioWIN XL 35-6	0	99999999999999999
360	006821	Proximity switch, capacitive	0	99999999999999999
370	006832	Proximity switch M12, inductive	0	99999999999999999
375	005026	OKE9281 Cable protection plate	0	99999999999999999
380	005067	BW2 Relay 30A 250V	0	99999999999999999
390	012499	Grooved ball bearing	0	99999999999999999
400	042510	Burn-back protection completely assembled for PMX, BioWIN 10-26	0	99999999999999999
410	050990	Hinge M345	0	99999999999999999
420	018058	U-washer	0	99999999999999999
430	018309	Disc 5 DIN134	0	99999999999999999

Item no.	Article no.	Description	Serialnumber from	Serialnumber to
440	031753	Disc 6 ISO 7093	0	99999999999999999
450	008915	Hose 7x2	0	99999999999999999
460	006874	Hose clip ABA 11	0	99999999999999999
470	006875	Hose clip 40-60	0	99999999999999999
480	051544	Auger	0	99999999999999999
490	050901	Auger motor SPG	0	99999999999999999
500	006378	Cutting ring DL8 07-151	0	99999999999999999
510	045951	Partition plate	0	99999999999999999
510	052480	Partition plate	0	99999999999999999
515	051790	Protection plate for cable BW2	0	99999999999999999
520	048971	Protection plate	0	99999999999999999
530	051604	Protection plate, top, bottom	0	99999999999999999
540	051397	Protection cover GPN 690	0	99999999999999999
550	016567	Hexagon nut M10 with flange and gearing (not illustrated)	0	99999999999999999
560	016565	Hexagon nut M5 with flange and gearing (not illustrated)	0	99999999999999999
570	016586	Hexagon nut M5 DIN 934	0	99999999999999999
580	016594	Hexagon nut M6 DIN 934	0	99999999999999999
590	016553	Hexagon nut M8 with flange and gearing	0	99999999999999999
600	031545	Hexagon screw M5x12 DIN 7500 (not ilustrated)	0	99999999999999999
610	017051	Hexagon screw M6x12 DIN 933 (not illustrated)	0	99999999999999999
620	021504	Hexagon screw M6x45 DIN933	0	99999999999999999
630	015134	Hexagon screw M8x16 DIN 933	0	99999999999999999
640	017086	Hexagon screw M8x20 DIN 933 (not illustrated)	0	99999999999999999
650	031258	Cable	0	99999999999999999
660	031261	Cable pulley	0	99999999999999999
670	031096	Countersinking screw M4x20 DIN965 gv KS (not illustrated)	0	99999999999999999
680	016727	Lock nut M5	0	99999999999999999
690	016171	Locking ring Ø20x1.2	0	99999999999999999
700	006897	Lock washer Ø 6	0	99999999999999999
710	045949	Sieve with eye	0	99999999999999999
725	005043	Base for relay	0	99999999999999999
730	045952	Clamping piece for cable	0	99999999999999999
740	009546	Spring lock	0	99999999999999999
750	050869	Spur gear M2 Z36	0	99999999999999999
760	045771	Spur gear M2 Z45	0	99999999999999999
770	003208	Grommet 10x17.5x1.2	0	99999999999999999
780	013749	Union nut 3/8"	0	99999999999999999
790	006351	Union nut ML8 GV	0	99999999999999999
800	048986	Pellet container cladding	0	99999999999999999
810	050887	BIO91 Reserve supply container Klassik, without motor	0	99999999999999999
820	050888	BIO92 Reserve supply container Premium, without motor	0	99999999999999999
830	050379	Water tank	0	99999999999999999
840	048903	Shaft seal ring DIN 3760AS AD52 ID20	0	99999999999999999
850	045946	Cyclone cover for BioWIN2 to 1.02.2015	0	99999999999999999
850	053466	Cyclone cover	0	99999999999999999
860	019836	Cylinder screw 2.9x16 (not illustrated)	0	99999999999999999
870	018139	Cylinder screw 4.2x13 DIN7981SP (not illustrated)	0	99999999999999999
880	016768	Cylinder screw M3x5	0	99999999999999999
890	052474	Cladding door	0	99999999999999999
900	051779	Cover	0	99999999999999999
910	051755	CoverPB BioWIN2	0	99999999999999999

Item no.	Article no.	Description	Serialnumber from	Serialnumber to
920	051754	Maintenance cover BioWIN2	0	99999999999999999
930	001760	Magnetic lock, black - VW, LWP18-50, LWK	0	99999999999999999
940	000299	Silicone buffer	0	99999999999999999
950	004237	Cylinder screw M5x10 ISO 4762 (not illustrated)	0	99999999999999999
960	051753	Door mounting, bottom	0	99999999999999999
970	009990	Leg M10 x 40	0	99999999999999999
980	051773	Magnetic sheet	0	99999999999999999
985	052482	Suction pipe	0	99999999999999999
990	051775	BIO83 side panel	0	99999999999999999
990	051776	BIO82 side panel	0	99999999999999999
1000	051771	Water tank support	0	99999999999999999
1010	051614	Pedestal	0	99999999999999999
1020	051781	Left side panel, grey	0	99999999999999999
1030	051752	Door mounting, top	0	99999999999999999
1040	012600	Gas spring 4534DS 0100 N	0	99999999999999999
1050	044802	Southco hinge	0	99999999999999999
1060	051751	L-bracket	0	99999999999999999
1070	051783	Pellet container cover	0	99999999999999999

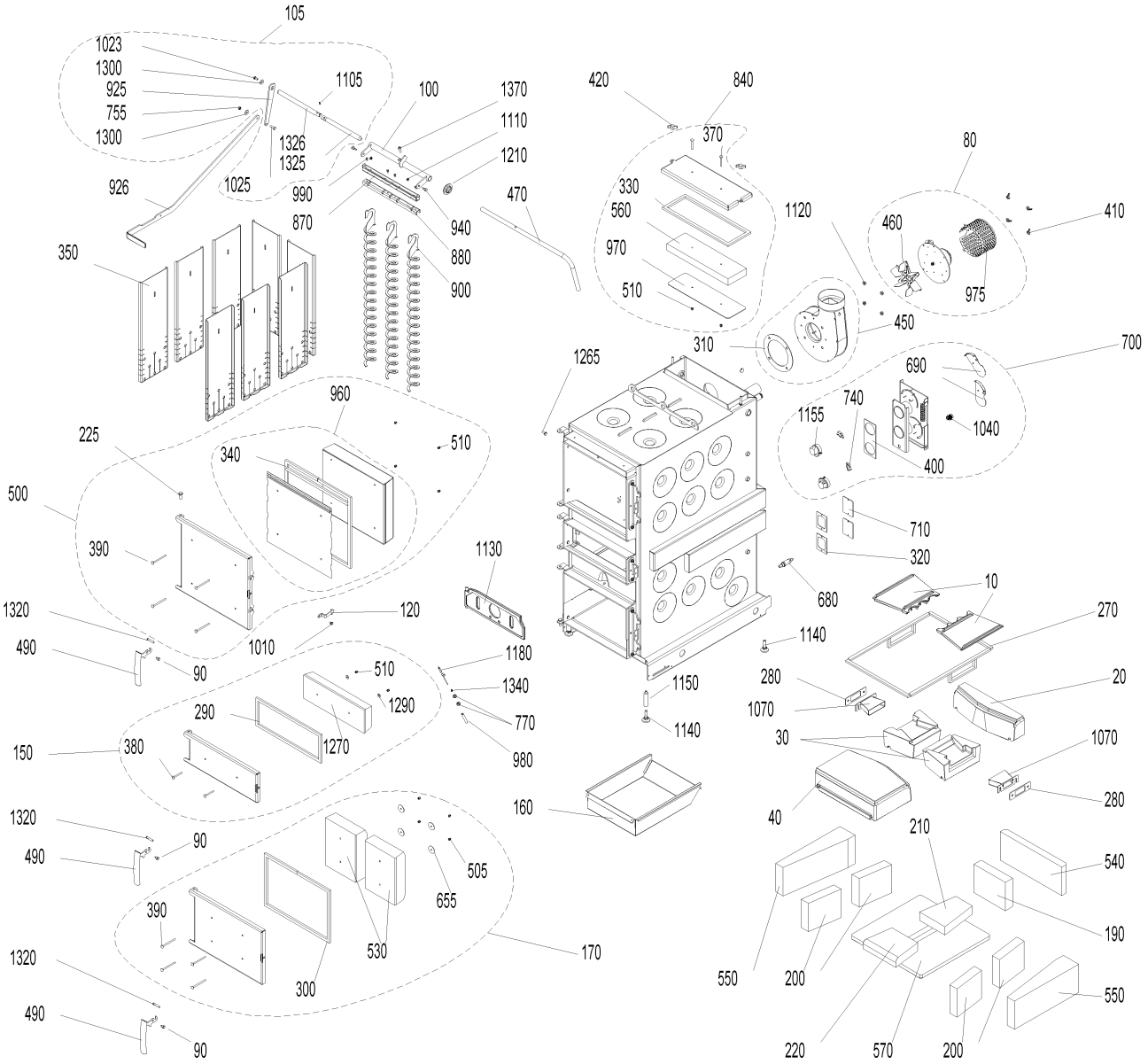
105
1023
1300
925
755
1300
1105
100
1370
1110
1210
1326
1325
1025
926
990
870
940
880
900
470
350
420
840
370
330
560
970
510
1120
80
460
410
975
450
310
1265
700
690
740
1155
1040
400
960
225
340
510
500
390
1130
710
320
680
10
270
1320
120
490
1010
90
1180
1140
510
1340
1150
280
20
1070
290
1290
770
1140
30
1070
150
380
1270
980
160
40
280
1320
90
490
505
655
210
540
390
530
170
190
1320
300
550
200
550
490
90
220
570
200

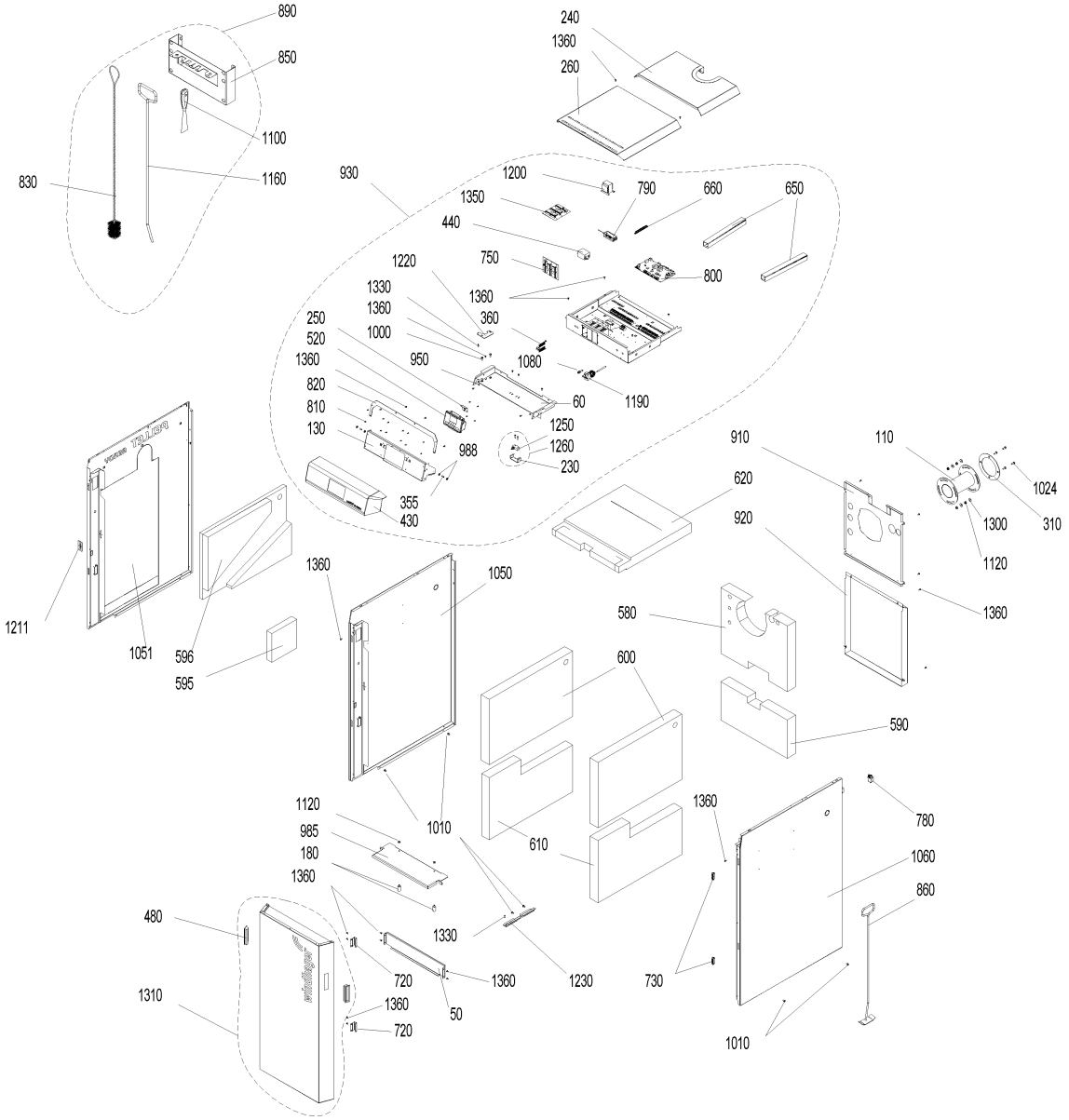
890
850
1100
1160
830
240
1360
260
930
1200
1350
790
660
650
440
750
800
1220
1330
1360
1360
360
250
520
1000
1360
950
1080
820
810
130
60
1190
1250
1260
230
988
355
430
910
110
1024
620
1300
310
920
1120
1360
1211
1051
596
595
1360
1050
580
600
590
1120
985
180
1360
1010
610
1360
780
1060
860
480
1330
720
1360
1230
730
1310
1360
50
720
1010

Item no.	Article no.	Description	Serialnumber from	Serialnumber to
10	007392	Burning plate LWP/LWK	0	99999999999999999
20	007397	Rear burning stone	0	99999999999999999
30	007388	Burning stone left/right LWK/LWP	0	99999999999999999
40	007377	Front burning stone	0	99999999999999999
50	051223	Sensor cover	0	99999999999999999
60	050808	Cover insulation	0	99999999999999999
70	504195	JW-010 Flue gas sensor set with protective pipe	0	99999999999999999
80	051661	Flue gas blower, complete for LWK	0	99999999999999999
90	048881	Axle for door handle CK45	0	99999999999999999
100	046328	Axle for cleaning heating surfaces	0	99999999999999999
105	052463	Axle for cleaning heating surfaces - LogWIN Klassik pellet ready	0	99999999999999999
110	503650	LWKAD1 Adapter for continuously adjustabel flue connection, left or right	0	99999999999999999
120	051244	Safety hook	0	99999999999999999
130	051307	Inside display panel	0	99999999999999999
150	051564	Lighting door, complete	0	99999999999999999
160	045419	Ash pan LWP18-50, LWK	0	99999999999999999
170	051563	Ash door, complete LWK	0	99999999999999999
180	051241	Fastener for carburisation gas duct LWK	0	99999999999999999
190	007383	Rear combustion chamber stone LWP18-30, LWK	0	99999999999999999
200	051233	Combustion chamber stone left/right LWK	0	99999999999999999
210	007384	Bottom rear combustion chamber stone LWP18-30	0	99999999999999999
220	007385	Bottom front combustion chamber stone LWP18-30	0	99999999999999999
225	033104	Door mounting bolt ISO 2341-A - 12x32	0	99999999999999999
230	045820	Door switch clip LWP / LWK	0	99999999999999999
240	051228	Rear cover LWK	0	99999999999999999
250	051297	InfoWIN cover LWK	0	99999999999999999
260	051226	Front cover LWK	0	99999999999999999
270	046119	Rope seal kit for burning stones LWP18-30	0	99999999999999999
280	007391	Seal for secondary air nozzle LWP180-305	0	99999999999999999
290	046267	Lighting door seal LWP18-50, LW	0	99999999999999999
300	046268	Ash door seal LWP18-50, LWK	0	99999999999999999
310	050825	Blower seal LWK	0	99999999999999999
320	009378	Seal for vent cover LWP18-50, LWK	0	99999999999999999
330	051567	Seal for cleaning cover LWK	0	99999999999999999
340	051568	Heating door seal set LWK	0	99999999999999999
350	051569	Hook-in plate LWK	0	99999999999999999
355	051836	Spring-loaded pressure piece M8	0	99999999999999999
360	003726	InfoWIN ribbon cable	0	99999999999999999
370	016178	Round-head screw M6x55	0	99999999999999999
380	016186	Round-head screw M6x60	0	99999999999999999
390	016190	Round-head screw M6x90	0	99999999999999999
400	009305	Flange seal LWP18-50, LWK	0	99999999999999999
410	019410	Wing nut M6	0	99999999999999999
420	007366	Wing nut M8	0	99999999999999999
430	051559	Front control pane LWK	0	99999999999999999
440	007649	Radio interference filter LWP18-50, LWK	0	99999999999999999
450	051577	Blower box, complete LWK	0	99999999999999999
460	053032	Blower wheel	0	99999999999999999
470	045447	Handle for cleaning heating surfaces for LogWIN Premium 180-305	0	99999999999999999
480	051237	Handle recess LWK	0	99999999999999999
490	048811	Boiler handle	0	99999999999999999

Item no.	Article no.	Description	Serialnumber from	Serialnumber to
500	051579	Heating door, complete LWK	0	99999999999999999
505	016192	Cap nut	0	99999999999999999
510	025968	Cap nut M6	0	99999999999999999
520	009879	InfoWIN plus F4 LWK, BioWIN2	0	99999999999999999
530	050585	Insulating stone AT LWK	0	99999999999999999
540	007380	Rear insulating stone for LogWIN Premium 180-305	0	99999999999999999
550	051234	Insulating stone left/right LWK	0	99999999999999999
560	050542	Insulating stone for cleaning cover LWK	0	99999999999999999
570	051236	Bottom insulating stone LWK	0	99999999999999999
580	051217	Top rear insulation LWK	0	99999999999999999
590	051216	Bottom rear insulation LWK	0	99999999999999999
595	007251	Left insulation - LogWIN Klassik pellet ready	0	99999999999999999
596	007250	Top left insulation - LogWIN Klassik pellet ready	0	99999999999999999
600	051214	Top left/right insulation	0	99999999999999999
610	051222	Bottom left/right insulation	0	99999999999999999
620	051215	Top front insulation	0	99999999999999999
630	007165	Lambda sensor cable (not illustrated)	0	99999999999999999
640	048419	Draught fan cable (not illustrated)	0	99999999999999999
650	050837	Cable duct	0	99999999999999999
655	016191	Washer M6 4x40x1,5	0	99999999999999999
660	009928	Terminal bar	0	99999999999999999
680	051646	Lambda sensor	0	99999999999999999
690	040032	Air choke	0	99999999999999999
700	045460	Air control, complete	0	99999999999999999
710	046338	Vent cover	0	99999999999999999
720	051157	Magnet retainer	0	99999999999999999
730	001760	Magnetic lock, black - VW, LWP18-50, LWK	0	99999999999999999
740	009277	Air control microswitch	0	99999999999999999
750	048754	Module connection PCB	0	99999999999999999
755	015992	Nut M8 DIN 934 V2 - LogWIN Klassik pellet ready	0	99999999999999999
770	031156	Hexagon nut M10 DIN 439	0	99999999999999999
780	041430	Mains connection socket 3-pin for MIRA,ETX,PMX,BioWIN10-26,LogWIN Premium 180-505,EasyWIN Premium 180,BioWIN XL 35-60, FireWIN	0	99999999999999999
790	051645	Power supply unit 12V	0	99999999999999999
800	011999	FMF PCB for LogWIN Premium 180-505	0	99999999999999999
810	051308	PT®- oval head screw	0	99999999999999999
820	051301	Pos.plate LWK	0	99999999999999999
830	003088	GWX992 Cleaning brush 950x45mm/45x70 mm for GWX, LogWIN Premium 180-505, EasyWIN Klassik/Premium 180	0	99999999999999999
840	051663	Cleaning cover LWK	0	99999999999999999
850	042743	Holder for cleaning equipments for VarioWIN, LogWIN Premium 180-505,SilvaWIN,BioWIN XL35-60,EasWIN Klassik/Premium 180	0	99999999999999999
860	040328	Cleaning rake for HMX,PMX, EasyWIN Klassik/Premium 180, LogWIN Premium 180-505	0	99999999999999999
870	046325	Top cleaning profile for LogWIN Premium 180-305	0	99999999999999999
880	046323	Bottom cleaning profile for LogWIN Premium 180-305	0	99999999999999999
890	502843	EWK020 Cleaning kit consisting of: cleaning brush, poker, spatula, hanger	0	99999999999999999
900	046322	Cleaning auger for LogWIN Premium 180-505	0	99999999999999999
910	050838	Top rear panel LWK	0	99999999999999999
920	050839	Bottom rear panel LWK	0	99999999999999999
925	052212	Shaker lever	0	99999999999999999
926	052202	Handle for cleaning heating surfaces - LogWIN Klassik pellet ready	0	99999999999999999
930	051134	LWK03 LOGWIN KLASSIK - SWITCH COVER	0	99999999999999999
940	006756	Screw M6 for heating surface cleaning for PMX,BioWIN 10-26,FireWIN, BioWIN XL 35-60, LogWIN Premium 180-505	0	99999999999999999
950	033528	Cylinder screw M 4 x 6 - 8.8	0	99999999999999999

Item no.	Article no.	Description	Serialnumber from	Serialnumber to
960	053240	Heating door protection plate LWK	0	99999999999999999
970	051666	Cleaning cover protection plate LWK	0	99999999999999999
975	010882	Flue gas blower protection hood LWK	0	99999999999999999
980	051231	Thermocontrol sensor protective tube LWK	0	99999999999999999
985	051230	Carborisation gas duct LWK	0	99999999999999999
988	016659	Hexagon nut M8 DIN434	0	99999999999999999
990	031545	Hexagon screw M5x12 DIN 7500 (not ilustrated)	0	99999999999999999
1000	015471	Hexagon screw M6x20 DIN 933	0	99999999999999999
1010	031549	Hexagon screw M6x12 DIN 7500	0	99999999999999999
1020	017882	Thread-rolling hexagon screw DIN 7500 - M8x16 TT - galvanised for VarioWIN, EasyWIN Klassik/Premium 180	0	99999999999999999
1023	016721	Hexagon screw M8x16 DIN 933	0	99999999999999999
1024	017086	Hexagon screw M8x20 DIN 933 (not illustrated)	0	99999999999999999
1025	017191	Hexagon screw M8x25 DIN 933	0	99999999999999999
1030	017046	Cyl. screw M 8X30	0	99999999999999999
1040	017205	Hexagon screws M12x25-8.8	0	99999999999999999
1050	051667	Side wall left LWK	0	99999999999999999
1051	052390	Side wall left LWK Pellet ready	0	99999999999999999
1060	051668	Side wall right LWK	0	99999999999999999
1070	045326	Secondary air nozzle complete for LogWIN Premium 180-305	0	99999999999999999
1075	003228	6.3A fuse (not illustrated)	0	99999999999999999
1080	003663	Fuse holder	0	99999999999999999
1090	016073	WERV013 Silicone seal, black 310ml	0	99999999999999999
1100	009540	Spatula	0	99999999999999999
1105	018184	Clamping pin DIN 1481 - Ø 5x14 for VarioWIN	0	99999999999999999
1110	016566	Hexagon nut with flange and gearing M6	0	99999999999999999
1120	016553	Hexagon nut M8 with flange and gearing	0	99999999999999999
1130	051162	Vertical grate LWK/LWP	0	99999999999999999
1140	009994	Foot M12X40 JTB38 for HMX, EasyWIN Klassik/Premium 180, LogWIN Premium 180-505	0	99999999999999999
1150	007453	Leg extension for LogWIN Premium 180-505, EasyWIN Klassik/Premium 180	0	99999999999999999
1155	040429	Servomotor for HMX, SilvaWIN, LogWIN Premium 180-505	0	99999999999999999
1160	080664	FAX192 Poker for FAX,HMX,SilvaWIN,FKX,EasyWIN Klassik/Premium 180,LogWIN Premium 180-505	0	99999999999999999
1170	009982	Immersion sensor 1,3m LWK	0	99999999999999999
1180	007626	Thermocouple	0	99999999999999999
1190	005672	Thermostat LS1+100-6U	0	99999999999999999
1200	007096	Transformer for O2 sensor 18VA for LogWIN Premium 180-505	0	99999999999999999
1210	048812	Grommet for EasyWIN, LogWIN Premium 180-505	0	99999999999999999
1211	052208	Seal	0	99999999999999999
1220	051220	Top door hinge LWK	0	99999999999999999
1230	050783	Bottom door hinge LWK	0	99999999999999999
1250	007128	Microswitch Z-15GQ-B for LogWIN Premium 180-505, BioWIN XL 35-60	0	99999999999999999
1260	046072	Door switch complete for LogWIN Premium 180-505	0	99999999999999999
1265	051671	Door screw M8	0	99999999999999999
1270	050590	Door stone for lighting door LWK	0	99999999999999999
1290	031753	Disc 6 ISO 7093	0	99999999999999999
1300	031755	Disc 8 ISO 7093	0	99999999999999999
1310	050780	Cladding door, complete	0	99999999999999999
1320	050568	Locking axle LWK	0	99999999999999999
1325	052207	Shaft 1 or cleaning heating surfaces - LogWIN Klassik pellet ready	0	99999999999999999
1326	052211	Shaft 2 or cleaning heating surfaces - LogWIN Klassik pellet ready	0	99999999999999999
1330	015507	Dog point screw	0	99999999999999999
1340	007164	Tension spring	0	99999999999999999

Item no.	Article no.	Description	Serialnumber from	Serialnumber to
1350	007095	Extra PCB for O2-mesure or pumping rotation speed control for BioWIN cascade, LogWIN Premium 180-505	0	99999999999999999
1360	018140	Cylinder screw 4.2x13 DIN7981ST (not illustrated)	0	99999999999999999

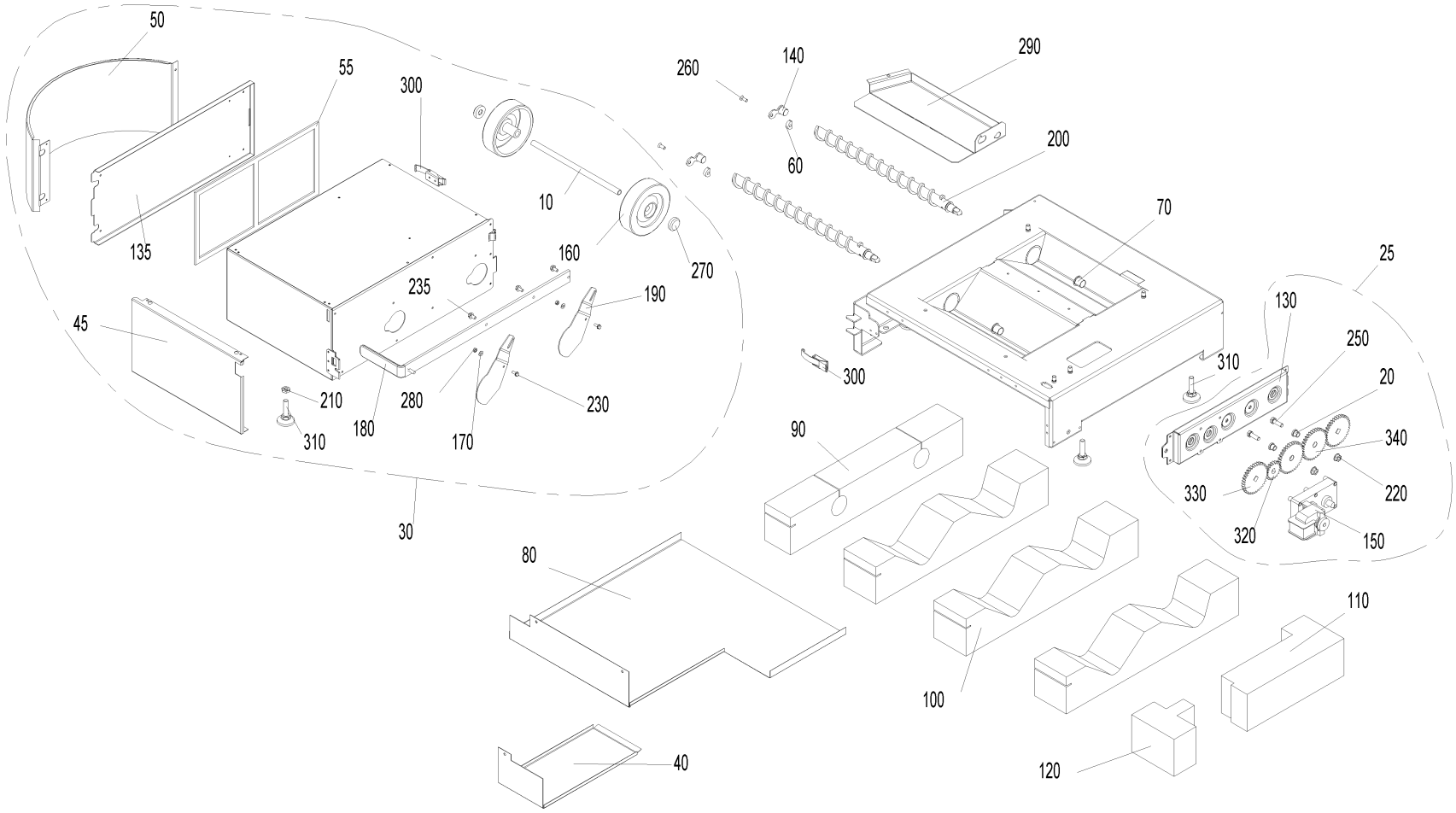
50
55
300
135
10
160
270
235
190
45
210
310
180
280
170
230
30
260
140
290
60
200
70
300
310
25
130
250
20
340
330
220
320
150
90
80
100
110
40
120

Item no.	Article no.	Description	Serialnumber from	Serialnumber to
10	051379	Ash box axle	0	99999999999999999
20	006745	Ash conveyor bearing bush	0	99999999999999999
25	054418	Ash removal, completely pre- mounted, BioWIN2	0	99999999999999999
30	051262	BIO90 Ash box, cpl	0	99999999999999999
40	051125	Cover for ash conveyor motor	0	99999999999999999
45	051633	Ash box lid	0	99999999999999999
50	051637	Ash box lid curve	0	99999999999999999
55	046665	Container seal	0	99999999999999999
60	048573	Distance	0	99999999999999999
70	012508	Friction bearing with connector	0	99999999999999999
80	051124	Cup insulation	0	99999999999999999
90	051126	Ash pipe insulation	0	99999999999999999
100	051127	Ash chamfer insulation	0	99999999999999999
110	051128	Motor insulation, rear	0	99999999999999999
120	051129	Motor insulation, front	0	99999999999999999
130	048572	Ash conveyor bracket	0	99999999999999999
135	051635	Ash box flap	0	99999999999999999
140	051120	Auger bearing	0	99999999999999999
150	044665	Motor	0	99999999999999999
160	006888	Wheel AG 125-12	0	99999999999999999
170	018309	Disc 5 DIN134	0	99999999999999999
180	051389	Ash box scraper	0	99999999999999999
190	050686	Sliding plate	0	99999999999999999
200	051542	Auger	0	99999999999999999
210	031156	Hexagon nut M10 DIN 439	0	99999999999999999
220	016553	Hexagon nut M8 with flange and gearing	0	99999999999999999
230	031545	Hexagon screw M5x12 DIN 7500 (not ilustrated)	0	99999999999999999
235	031549	Hexagon screw M6x12 DIN 7500	0	99999999999999999
240	017086	Hexagon screw M8x20 DIN 933 (not illustrated)	0	99999999999999999
250	017191	Hexagon screw M8x25 DIN 933	0	99999999999999999
260	016863	Countersinking screw M6x16	0	99999999999999999
270	006889	Washer Ø12	0	99999999999999999
280	016727	Lock nut M5	0	99999999999999999
290	050692	Ash box base	0	99999999999999999
300	009546	Spring lock	0	99999999999999999
310	009990	Leg M10 x 40	0	99999999999999999
320	047543	Spur gear M2 Z20	0	99999999999999999
330	050869	Spur gear M2 Z36	0	99999999999999999
340	048566	Spur gear M2 Z36 Ø12	0	99999999999999999

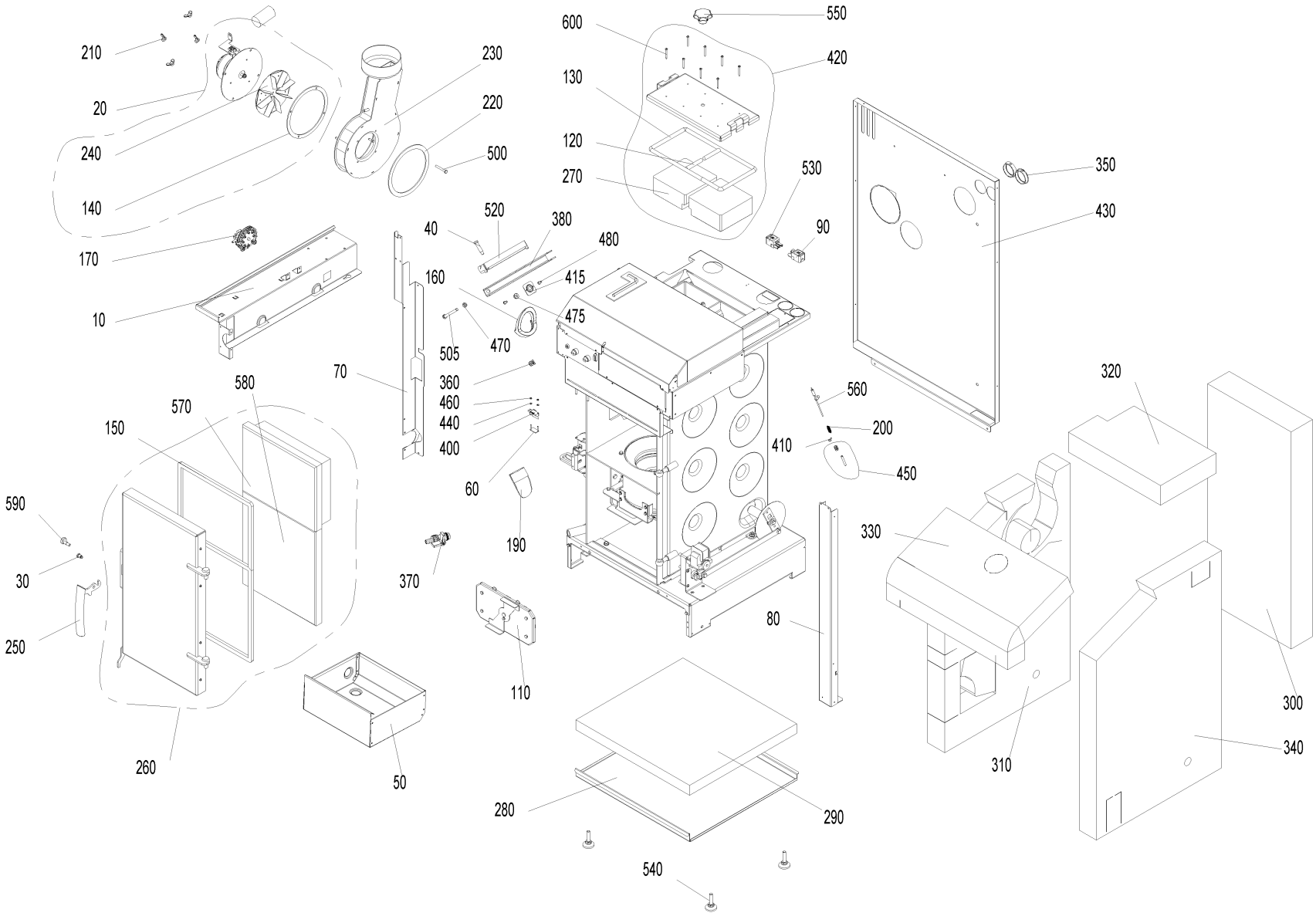
210
20
240
140
170
10
230
220
500
520
40
380
480
160
415
475
505
470
70
360
460
440
400
60
190
370
580
570
150
590
30
250
260
50
110
600
550
420
130
120
270
530
90
350
430
560
200
410
450
320
330
80
310
300
340
280
290
540

Item no.	Article no.	Description	Serialnumber from	Serialnumber to
10	050918	Cover plate	0	99999999999999999
20	053010	Flue gas blower	0	99999999999999999
30	048881	Axle for door handle CK45	0	99999999999999999
40	013813	Collar screw	0	99999999999999999
50	048928	Ash pan	0	99999999999999999
60	051045	Fastened microswitch, complete	0	99999999999999999
70	051109	Cover, left	0	99999999999999999
80	048609	Cover, right	0	99999999999999999
90	070324	Socket, 3-pin, black	0	99999999999999999
110	051056	Coasting surface cover, complete	0	99999999999999999
120	051040	Sealing cord, short	0	99999999999999999
120	051041	Sealing cord, short	0	99999999999999999
130	051017	Sealing cord for cleaning cover	0	99999999999999999
130	051034	Sealing cord for cleaning cover	0	99999999999999999
140	051006	Blower box seal	0	99999999999999999
150	048916	Heating door seal	0	99999999999999999
160	048926	Auger tube seal	0	99999999999999999
170	045404	Differential pressure watchdog	0	99999999999999999
190	048921	Down chute	0	99999999999999999
200	050647	Combustion chamber sensor spring	0	99999999999999999
210	019410	Wing nut M6	0	99999999999999999
220	051005	Blower seal	0	99999999999999999
230	053234	Blower box for BioWIN102-262	0	99999999999999999
240	052951	Blower wheel Ø160 x 25 for BioWIN2 102 - 262	0	99999999999999999
250	007480	Boiler handle	0	99999999999999999
260	051545	Heating door cpl. mounted	0	99999999999999999
270	050636	Insulating stone for cleaning cover	0	99999999999999999
270	051007	Insulating stone for cleaning cover	0	99999999999999999
280	048863	Cup insulation 10-26 K BW2	0	99999999999999999
290	048864	Floor insulation	0	99999999999999999
300	051116	Rear insulation	0	99999999999999999
310	051119	Left insulation	0	99999999999999999
320	048910	Coasting surface insulation	0	99999999999999999
330	048911	Top insulation	0	99999999999999999
340	050924	Right insulation	0	99999999999999999
350	004096	Cable feed-through 2400 black Ø50	0	99999999999999999
360	051112	Cage nut M8	0	99999999999999999
370	004385	KFE cock	0	99999999999999999
380	048611	Pellet container clamp	0	99999999999999999
400	007632	Microswitch with lever	0	99999999999999999
410	031274	Eyelet M6	0	99999999999999999
415	052484	Platelet flanged nut	0	99999999999999999
420	048870	Cleaning cover, complete	0	99999999999999999
420	050477	Cleaning cover, complete	0	99999999999999999
430	050916	Rear wall	0	99999999999999999
440	021474	Disc 3 DIN134	0	99999999999999999
450	051069	Protective tube for combustion chamber sensor, complete	0	99999999999999999
460	016551	Hexagon nut M3 DIN 934	0	99999999999999999
470	015992	Nut M8 DIN 934 V2 - LogWIN Klassik pellet ready	0	99999999999999999
475	016553	Hexagon nut M8 with flange and gearing	0	99999999999999999
480	031545	Hexagon screw M5x12 DIN 7500 (not ilustrated)	0	99999999999999999

Item no.	Article no.	Description	Serialnumber from	Serialnumber to
500	021504	Hexagon screw M6x45 DIN933	0	99999999999999999
505	016461	Hexagon screw M8x80 DIN 933	0	99999999999999999
520	048975	Clamping rail	0	99999999999999999
530	070323	Plug, 3-pin, black	0	99999999999999999
540	009990	Leg M10 x 40	0	99999999999999999
550	005125	Star handle M12 x 35	0	99999999999999999
560	007626	Thermocouple	0	99999999999999999
570	048914	Door stone	0	99999999999999999
580	050447	Bottom door stone	0	99999999999999999
590	051004	Locking pin	0	99999999999999999
600	016719	Cylinder drilling screw 4.2 x 38 DIN7504	0	99999999999999999

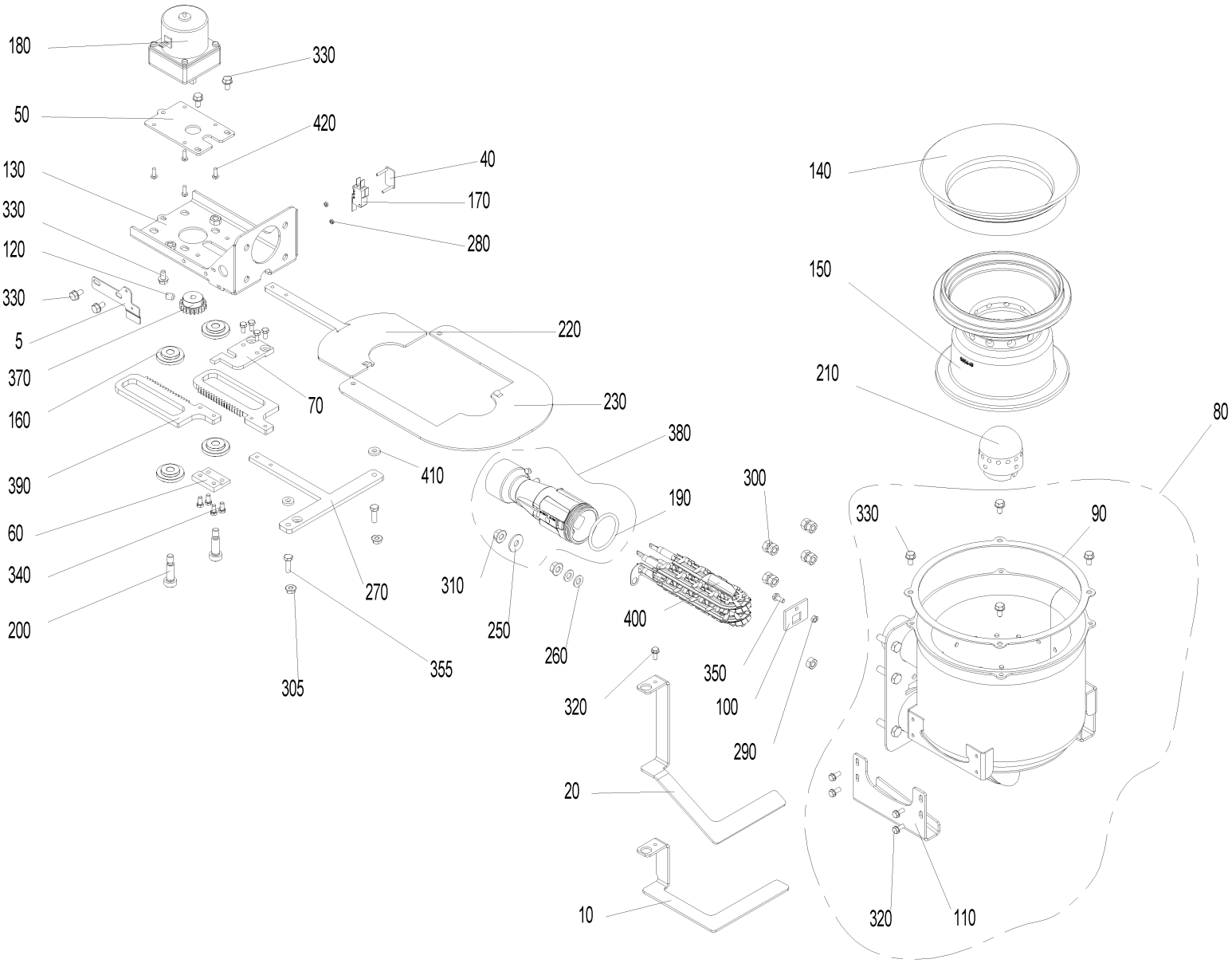
180
330
50
420
130
40
170
330
280
120
330
5
220
370
70
230
160
380
390
410
300
190
60
340
270
310
250
400
200
260
350
305
355
320
100
290
20
10
140
150
210
80
330
90
320
110

Item no.	Article no.	Description	Serialnumber from	Serialnumber to
5	053544	Stop plate		
10	051048	Ash stop plate, Klassik, Premium		
20	051046	Microswitch fastening		
40	051045	Fastened microswitch, complete		
50	050632	Bracket mounting plate		
60	050649	Mounting plate		
70	051042	Mounting plate, top		
80	051065	Burner		
90	048861	Burner seal		
100	048841	Driving rod feed-through		
110	048842	Grate plate guide		
120	033112	Setscrew M8x10 DIN916		
125	053643	Cable - ignition element for BW1, BW2, FireWIN and VarioWIN		
130	050639	Shake-out bracket		
140	050642	Cone, top part 45°		
150	048941	Cone, bottom part for BioWIN2 21/26		
160	007125	Bearing for vibrating drive		
170	007632	Microswitch with lever		
180	012561	Shake-out motor		
190	006849	O-ring FPM70 45 x 4		
200	017048	Shoulder screw M8 10x25 ISO 7379		
210	047774	Primary air pin for BioWIN10-26 FireWIN bis Los9 und PMX 21-26		
220	051051	Grate plate, left		
230	053539	Grate plate, right		
240	021474	Disc 3 DIN134		
250	031755	Disc 8 ISO 7093		
260	024779	Disc 8 ISO 7089		
270	051023	Grate plate scraper		
280	016551	Hexagon nut M3 DIN 934		
290	017035	Hexagon nut M5 DIN 934		
300	031153	Hexagon nut M8 DIN 934		
305	016566	Hexagon nut with flange and gearing M6		
310	016553	Hexagon nut M8 with flange and gearing		
320	031545	Hexagon screw M5x12 DIN 7500 (not ilustrated)		
330	031549	Hexagon screw M6x12 DIN 7500		
340	016756	Hexagon screw M5x10 DIN 933		
355	015471	Hexagon screw M6x20 DIN 933		
370	007222	Spur gear M1,5; Z21		
380	051067	Venturi nozzle		
390	048161	Steering rack BioWin2 10-26		
400	055201	Ignition element BioWIN10-26, FireWIN from lot 15, VarioWIN from lot 15 BioWIN XL, LWK		
402	053851	de: Zündelement inkl. Kabel beigelegt.		
410	051054	Intermediate plate		
420	016780	Cylinder screw M4x12 DIN 7985		

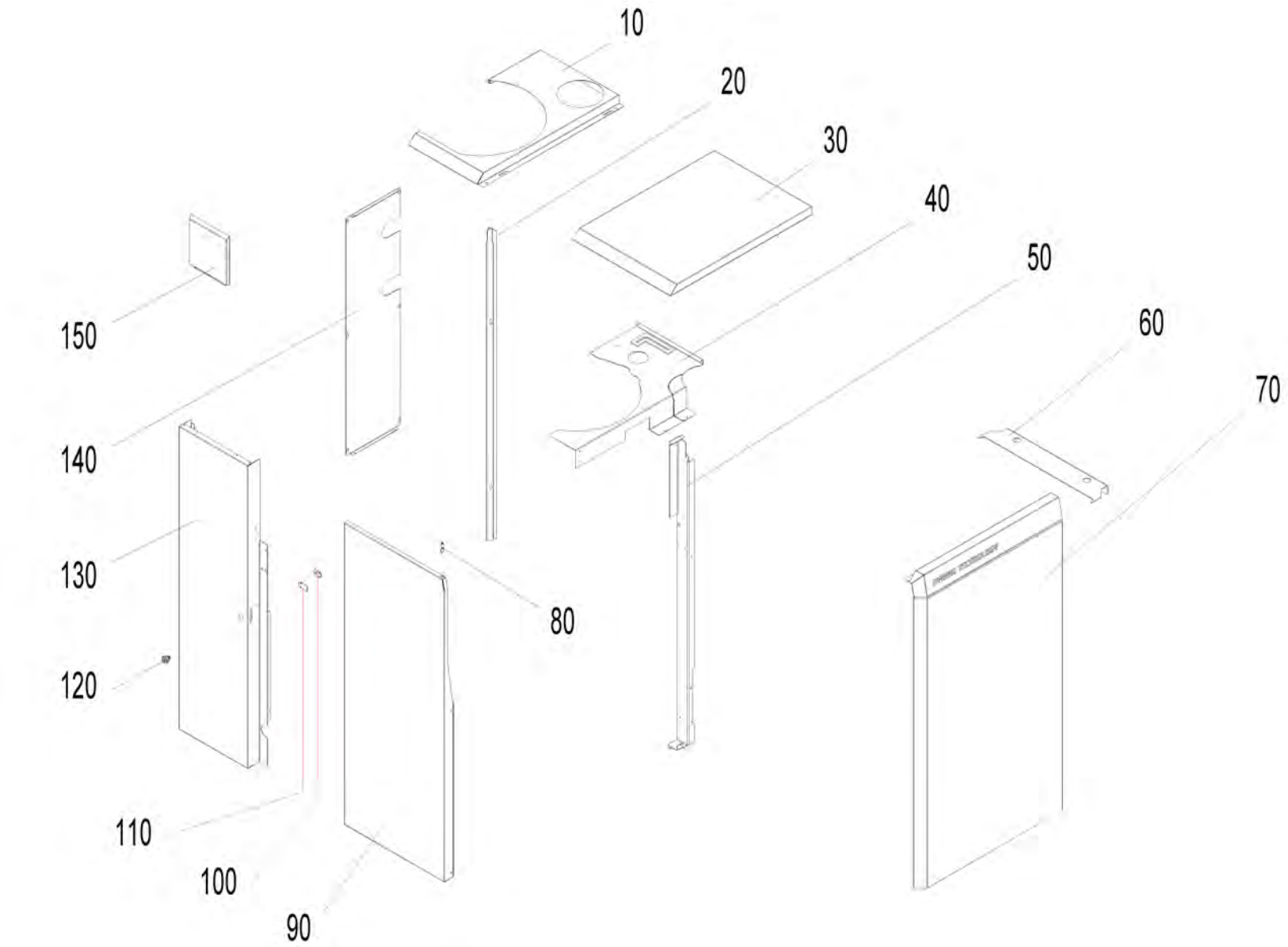
10
20
30
40
50
60
70
80
90
100
110
120
130
140
150

Item no.	Article no.	Description	Serialnumber from	Serialnumber to
10	051901	Cover pellets storage side for BioWin2-DuoWin	0	99999999999999999
20	051883	Angle profile rear panel for BioWin2-DuoWin	0	99999999999999999
30	051875	Cover boiler side BioWin2-DuoWin	0	99999999999999999
40	051903	Cover plate control panel for BioWin2-DuoWin	0	99999999999999999
50	051877	Door hinge bracket for BioWin2-DuoWin	0	99999999999999999
60	051872	Angle profile for positioning BioWin2-DuoWin	0	99999999999999999
70	051902	Front panel BioWIN2 - DuoWIN	0	99999999999999999
80	007191	Locking bolt with pull ring GN 717-5-M8-A-ST	0	99999999999999999
90	051899	Cladding door for BioWIN2 - DuoWIN	0	99999999999999999
100	047891	Driver	0	99999999999999999
110	051882	Locking plate for BioWIN2 - DuoWIN	0	99999999999999999
120	012256	Turning bolt	0	99999999999999999
130	051900	Rear left side panel for BioWIN2 - DuoWIN	0	99999999999999999
140	051884	Rear panel for BioWIN2 - DuoWIN	0	99999999999999999
150	051886	Pellet container cover for BioWin2-DuoWin	0	99999999999999999
160	504048	Flue connection DuoWin for pellet boiler	0	99999999999999999

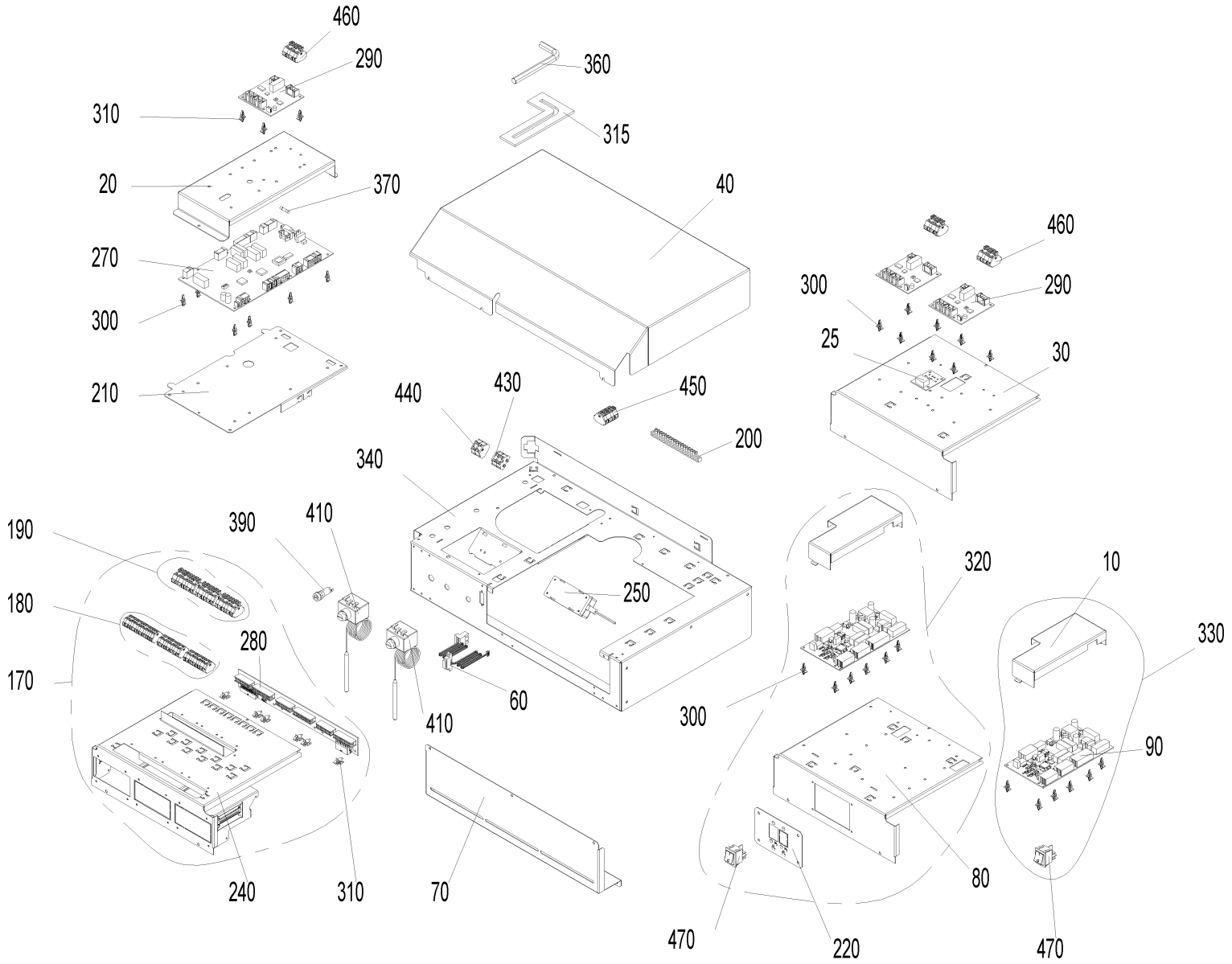
460
290
310
20
370
270
300
210
360
315
40
460
300
290
25
30
440
430
450
200
340
250
190
180
170
390
410
280
60
410
240
310
70
320
10
330
300
90
80
470
220
470

Item no.	Article no.	Description	Serialnumber from	Serialnumber to
10	048750	BUML TTL 2Z cover	0	99999999999999999
20	048955	PCB cover	0	99999999999999999
25	012012	LON connection diagram	0	99999999999999999
30	051382	REG000BW2 External control system cover	0	99999999999999999
40	048618	Control panel cover	0	99999999999999999
60	050970	Ribbon cable, Lon	0	99999999999999999
70	048902	Retaining plate	0	99999999999999999
80	048613	Retaining bracket, REG	0	99999999999999999
90	009767	BUML TTL 2Z interface	0	99999999999999999
100	002059	Power supply cable (not illustrated)	0	99999999999999999
110	050971	Power supply cable OT (not illustrated)	0	99999999999999999
120	043586	Draught fan cable (not illustrated)	0	99999999999999999
130	003719	TTL cable (not illustrated)	0	99999999999999999
140	040333	Wiring harness 12 V (not illustrated)	0	99999999999999999
150	040335	Wiring harness 230 V (not illustrated)	0	99999999999999999
160	040334	Wiring harness AAT HFR (not illustrated)	0	99999999999999999
170	050910	MESBW2 Cable harness	0	99999999999999999
180	051415	Cable harness MES extra-low voltage 12 V	0	99999999999999999
190	051414	Cable harness MES low voltage 230 V	0	99999999999999999
200	009928	Terminal bar	0	99999999999999999
210	050959	Bracket fireing automat	0	99999999999999999
220	048952	Rocker switch bracket	0	99999999999999999
230	018190	Oval-head screw 3.2x16 (not illustrated)	0	99999999999999999
240	051390	Module guide complete	0	99999999999999999
250	051645	Power supply unit 12V	0	99999999999999999
260	005784	Pin connector (not illustrated)	0	99999999999999999
270	011990	PCB, FMP BW2	0	99999999999999999
280	050996	MES PCB	0	99999999999999999
290	011994	PCB board, FMO-J	0	99999999999999999
300	007609	PCB holder	0	99999999999999999
310	007549	PCB holder, Richco	0	99999999999999999
315	051766	Position hexagon pin screwdriver	0	99999999999999999
320	050912	REG 021	0	99999999999999999
330	050913	REG 024	0	99999999999999999
340	048605	Control panel, floor	0	99999999999999999
360	027391	Hexagon pin screwdriver 10 mm DIN 911	0	99999999999999999
370	006900	Fuse 1 A T 5x20 ceramic tube	0	99999999999999999
380	003228	6.3A fuse (not illustrated)	0	99999999999999999
390	003663	Fuse holder	0	99999999999999999
400	007629	Immersion sensor PT 1000 (not illustrated)	0	99999999999999999
405	502186	MES009M Immersion sensor	0	99999999999999999
410	005672	Thermostat LS1+100-6U	0	99999999999999999
415	003208	Grommet 10x17.5x1.2	0	99999999999999999
430	006833	Wago terminal block 261; 4-pin "12V GND"	0	99999999999999999
440	006834	Wago terminal block 261; 4-pin "safety 1-4"	0	99999999999999999
450	007656	Wago terminal block 261; 6-pin	0	99999999999999999
460	010047	Wago terminal block 261; 6-pin extra PCB	0	99999999999999999
470	005563	Rocker switch SW/GR 0-1	0	99999999999999999
480	018140	Cylinder screw 4.2x13 DIN7981ST (not illustrated)	0	99999999999999999

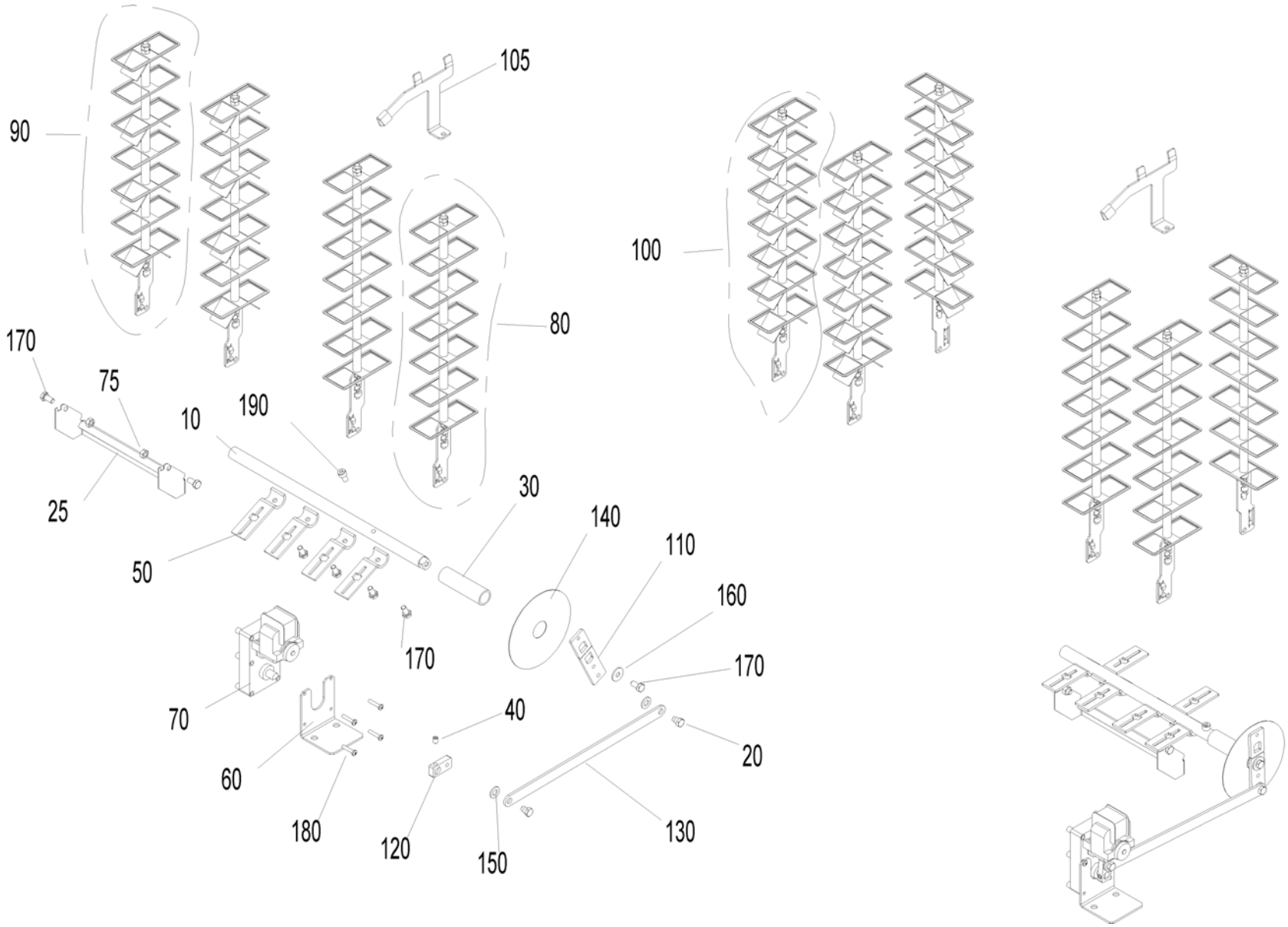
90
105
80
100
170
75
10
190
25
50
30
140
110
160
170
170
70
40
20
60
180
120
150
130

Item no.	Article no.	Description	Serialnumber from	Serialnumber to
10	048882	Axle heating surface BW2 10-26	0	99999999999999999
20	012502	Collar screw	0	99999999999999999
25	051624	Ash sheet	0	99999999999999999
30	048980	Distance rod	0	99999999999999999
40	033112	Setscrew M8x10 DIN916	0	99999999999999999
50	051547	Lever for cleaning heating surfaces	0	99999999999999999
60	051121	L-bracket, motor HFR	0	99999999999999999
70	044665	Motor	0	99999999999999999
75	015992	Nut M8 DIN 934 V2 - LogWIN Klassik pellet ready	0	99999999999999999
80	051609	Clearer flat	0	99999999999999999
90	051610	Clearer flat with turbulator	0	99999999999999999
100	051611	Clearer flat with turbulator	0	99999999999999999
105	051076	Cleaning plate for combustion chamber	0	99999999999999999
110	048884	Shaker lever 1	0	99999999999999999
120	048885	Shaker lever 2	0	99999999999999999
130	051367	Shaker lever 3	0	99999999999999999
140	051122	Disc	0	99999999999999999
150	024780	Disc 10 ISO7089	0	99999999999999999
160	031755	Disc 8 ISO 7093	0	99999999999999999
170	016721	Hexagon screw M8x16 DIN 933	0	99999999999999999
180	016837	Cylinder screw M5x25 ISO 7045	0	99999999999999999
190	016773	Cylinder screw M8x16 ISO 4762	0	99999999999999999

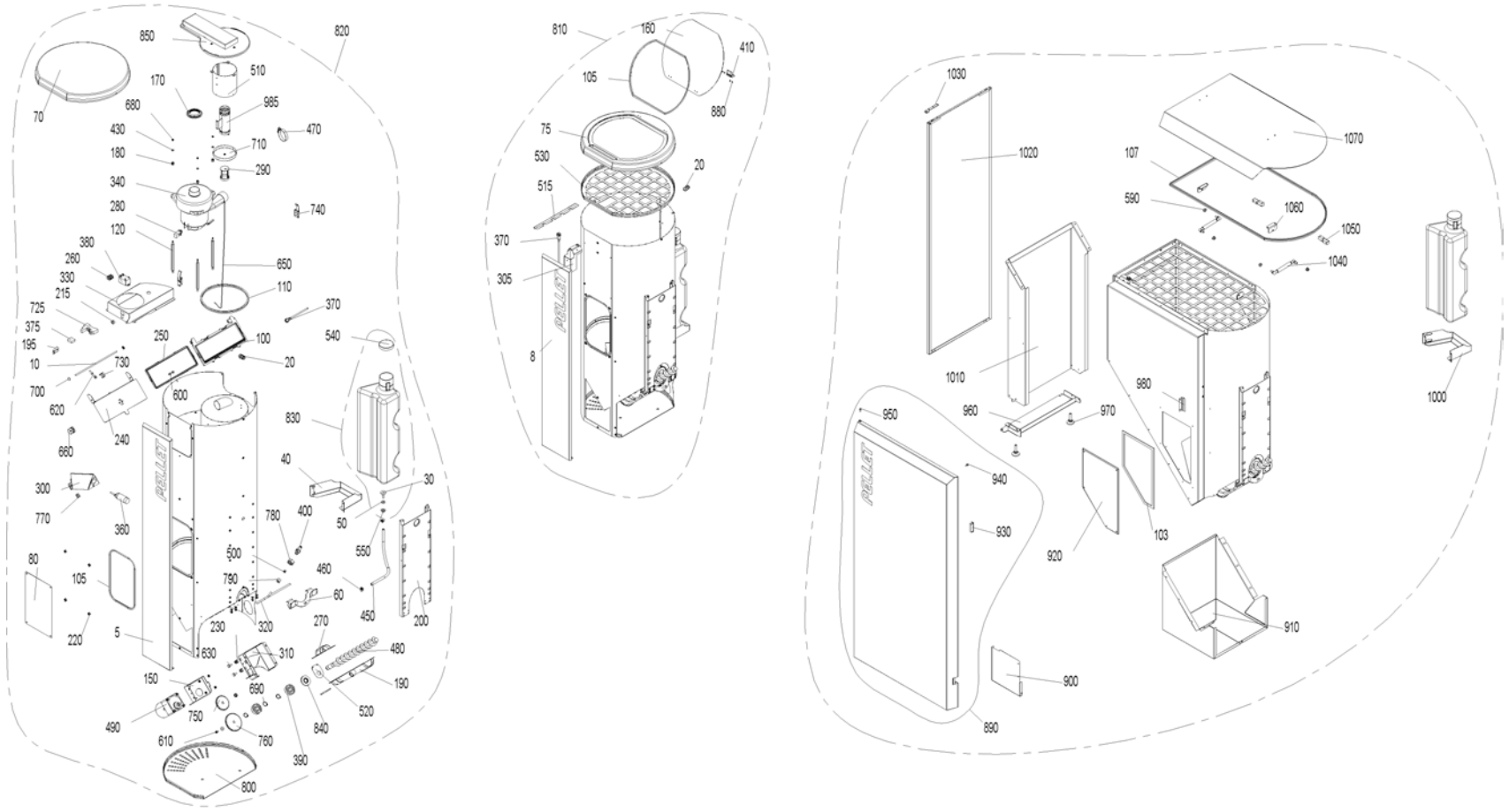
850
820
70
510
170
985
680
470
430
710
180
290
340
740
280
120
380
650
260
330
110
215
370
725
375
250
100
540
195
730
20
10
700
600
620
240
830
660
40
30
300
400
50
770
360
780
550
80
500
460
105
790
60
450
200
220
5
230
320
270
480
630
310
150
190
690
520
490
750
840
610
760
390
800
810
160
410
105
880
75
530
20
515
370
305
8
1030
1020
107
1070
590
1060
1050
1040
1010
980
960
970
1000
950
940
930
920
103
910
900
890

Item no.	Article no.	Description	Serialnumber from	Serialnumber to
5	051749	PB cover plate, grey	0	99999999999999999
8	051758	PB Klassik cover plate, grey	0	99999999999999999
10	042452	Feed axle	0	99999999999999999
20	006340	Mount connections PG9	0	99999999999999999
30	006877	Water connection	0	99999999999999999
40	051107	Water tank support	0	99999999999999999
50	006851	Support plate, motor	0	99999999999999999
60	048974	Fastening bracket	0	99999999999999999
70	050884	Pellet container cover	0	99999999999999999
75	051000	Pellet container cover Klassik	0	99999999999999999
80	050868	Cover reserve supply	0	99999999999999999
100	031254	Seal frame	0	99999999999999999
103	046665	Container seal	0	99999999999999999
105	053465	Reserve supply container seal	0	99999999999999999
107	053467	Seal profile reserve supply container 200 kg	0	99999999999999999
110	042232	Seal section	0	99999999999999999
120	031256	Distance bolt	0	99999999999999999
130	051386	Cheese head screw M5x10 Taptite	0	99999999999999999
140	051387	Cheese head screw M5x10 Taptite, grey	0	99999999999999999
150	051114	Flange, auger motor	0	99999999999999999
160	051001	Filling cover	0	99999999999999999
170	031253	Blower seal	0	99999999999999999
180	009559	Rubber grommet DK 6-9-12-7	0	99999999999999999
190	053540	Half-collar auger tube	0	99999999999999999
195	005077	Bracket	0	99999999999999999
200	048976	Retaining bracket, pellet tank	0	99999999999999999
210	045048	Cable feed with relay	0	99999999999999999
215	009542	Cable feed-through	0	99999999999999999
220	051388	Cage nut M5	0	99999999999999999
230	051112	Cage nut M8	0	99999999999999999
240	045955	Receptacle flap	0	99999999999999999
250	031257	Flap seal	0	99999999999999999
260	000965	Terminal, 3-pin	0	99999999999999999
270	048967	Clamp collar	0	99999999999999999
280	006859	Carbon brushes for blower motor	0	99999999999999999
290	042035	Piston	0	99999999999999999
300	048970	Proximity switch bracket	0	99999999999999999
305	051786	Proximity switch bracket lid	0	99999999999999999
310	048891	Auger motor bracket	0	99999999999999999
320	050867	Back-burn safeguard lead	0	99999999999999999
330	050866	Air duct	0	99999999999999999
340	044667	Blower motor 122151-12 for feed Conversion instructions for use with PMX 15-26 are enclosed! for BioWIN 10-26, PMX,BioWIN XL 35-6	0	99999999999999999
360	006821	Proximity switch, capacitive	0	99999999999999999
370	006832	Proximity switch M12, inductive	0	99999999999999999
375	005026	OKE9281 Cable protection plate	0	99999999999999999
380	005067	BW2 Relay 30A 250V	0	99999999999999999
390	012499	Grooved ball bearing	0	99999999999999999
400	042510	Burn-back protection completely assembled for PMX, BioWIN 10-26	0	99999999999999999
410	050990	Hinge M345	0	99999999999999999
420	018058	U-washer	0	99999999999999999
430	018309	Disc 5 DIN134	0	99999999999999999

Item no.	Article no.	Description	Serialnumber from	Serialnumber to
440	031753	Disc 6 ISO 7093	0	99999999999999999
450	008915	Hose 7x2	0	99999999999999999
460	006874	Hose clip ABA 11	0	99999999999999999
470	006875	Hose clip 40-60	0	99999999999999999
480	051544	Auger	0	99999999999999999
490	050901	Auger motor SPG	0	99999999999999999
500	006378	Cutting ring DL8 07-151	0	99999999999999999
510	045951	Partition plate	0	99999999999999999
510	052480	Partition plate	0	99999999999999999
515	051790	Protection plate for cable BW2	0	99999999999999999
520	048971	Protection plate	0	99999999999999999
530	051604	Protection plate, top, bottom	0	99999999999999999
540	051397	Protection cover GPN 690	0	99999999999999999
550	016567	Hexagon nut M10 with flange and gearing (not illustrated)	0	99999999999999999
560	016565	Hexagon nut M5 with flange and gearing (not illustrated)	0	99999999999999999
570	016586	Hexagon nut M5 DIN 934	0	99999999999999999
580	016594	Hexagon nut M6 DIN 934	0	99999999999999999
590	016553	Hexagon nut M8 with flange and gearing	0	99999999999999999
600	031545	Hexagon screw M5x12 DIN 7500 (not ilustrated)	0	99999999999999999
610	017051	Hexagon screw M6x12 DIN 933 (not illustrated)	0	99999999999999999
620	021504	Hexagon screw M6x45 DIN933	0	99999999999999999
630	015134	Hexagon screw M8x16 DIN 933	0	99999999999999999
640	017086	Hexagon screw M8x20 DIN 933 (not illustrated)	0	99999999999999999
650	031258	Cable	0	99999999999999999
660	031261	Cable pulley	0	99999999999999999
670	031096	Countersinking screw M4x20 DIN965 gv KS (not illustrated)	0	99999999999999999
680	016727	Lock nut M5	0	99999999999999999
690	016171	Locking ring Ø20x1.2	0	99999999999999999
700	006897	Lock washer Ø 6	0	99999999999999999
710	045949	Sieve with eye	0	99999999999999999
725	005043	Base for relay	0	99999999999999999
730	045952	Clamping piece for cable	0	99999999999999999
740	009546	Spring lock	0	99999999999999999
750	050869	Spur gear M2 Z36	0	99999999999999999
760	045771	Spur gear M2 Z45	0	99999999999999999
770	003208	Grommet 10x17.5x1.2	0	99999999999999999
780	013749	Union nut 3/8"	0	99999999999999999
790	006351	Union nut ML8 GV	0	99999999999999999
800	048986	Pellet container cladding	0	99999999999999999
810	050887	BIO91 Reserve supply container Klassik, without motor	0	99999999999999999
820	050888	BIO92 Reserve supply container Premium, without motor	0	99999999999999999
830	050379	Water tank	0	99999999999999999
840	048903	Shaft seal ring DIN 3760AS AD52 ID20	0	99999999999999999
850	045946	Cyclone cover for BioWIN2 to 1.02.2015	0	99999999999999999
850	053466	Cyclone cover	0	99999999999999999
860	019836	Cylinder screw 2.9x16 (not illustrated)	0	99999999999999999
870	018139	Cylinder screw 4.2x13 DIN7981SP (not illustrated)	0	99999999999999999
880	016768	Cylinder screw M3x5	0	99999999999999999
890	052474	Cladding door	0	99999999999999999
900	051779	Cover	0	99999999999999999
910	051755	CoverPB BioWIN2	0	99999999999999999

Item no.	Article no.	Description	Serialnumber from	Serialnumber to
920	051754	Maintenance cover BioWIN2	0	99999999999999999
930	001760	Magnetic lock, black - VW, LWP18-50, LWK	0	99999999999999999
940	000299	Silicone buffer	0	99999999999999999
950	004237	Cylinder screw M5x10 ISO 4762 (not illustrated)	0	99999999999999999
960	051753	Door mounting, bottom	0	99999999999999999
970	009990	Leg M10 x 40	0	99999999999999999
980	051773	Magnetic sheet	0	99999999999999999
985	052482	Suction pipe	0	99999999999999999
990	051775	BIO83 side panel	0	99999999999999999
990	051776	BIO82 side panel	0	99999999999999999
1000	051771	Water tank support	0	99999999999999999
1010	051614	Pedestal	0	99999999999999999
1020	051781	Left side panel, grey	0	99999999999999999
1030	051752	Door mounting, top	0	99999999999999999
1040	012600	Gas spring 4534DS 0100 N	0	99999999999999999
1050	044802	Southco hinge	0	99999999999999999
1060	051751	L-bracket	0	99999999999999999
1070	051783	Pellet container cover	0	99999999999999999

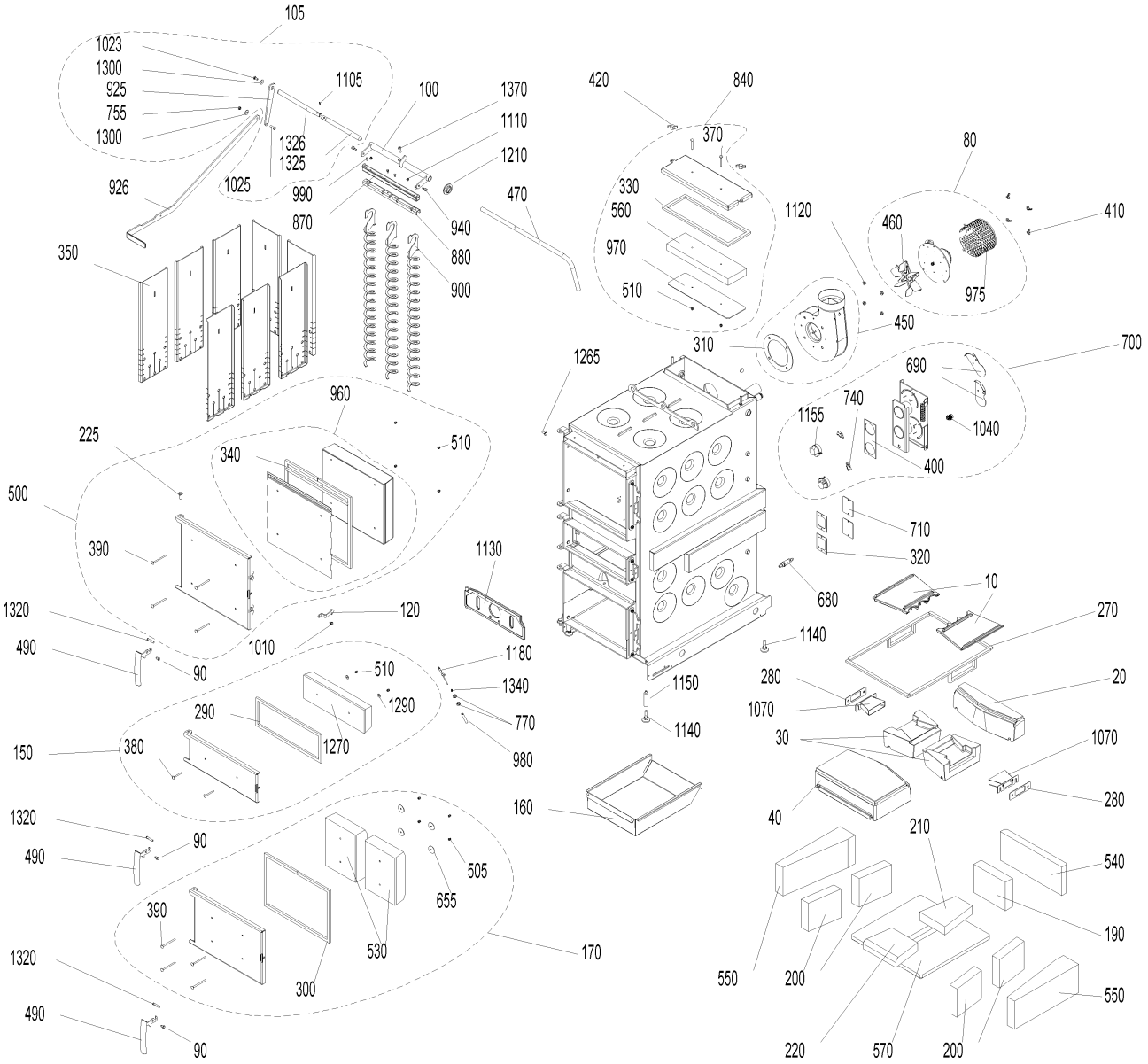
105
1023
1300
925
755
1300
1105
100
1370
1110
1210
1326
1325
1025
926
990
870
940
880
900
470
350
420
840
370
330
560
970
510
1120
80
460
410
975
450
310
1265
700
690
740
1155
1040
400
960
225
340
510
500
390
1130
710
320
680
10
270
1320
120
490
1010
90
1180
1140
510
1340
1150
280
20
1070
290
1290
770
1140
30
1070
150
380
1270
980
160
40
280
1320
90
490
505
655
210
540
390
530
170
190
1320
300
550
200
550
490
90
220
570
200

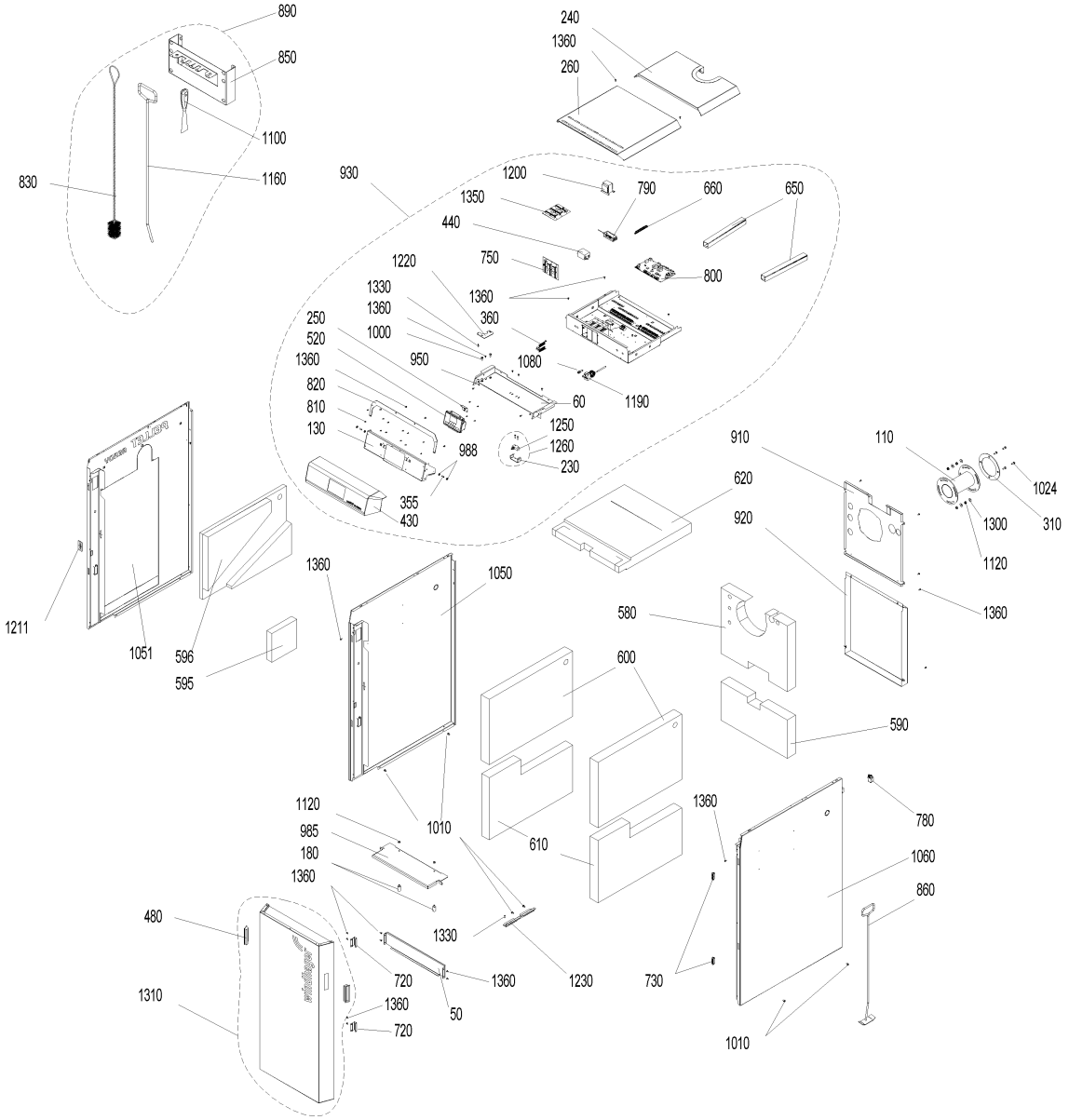
890
850
1100
1160
830
240
1360
260
930
1200
1350
790
660
650
440
750
800
1220
1330
1360
1360
360
250
520
1000
1360
950
1080
820
810
130
60
1190
1250
1260
230
988
355
430
910
110
1024
620
1300
310
920
1120
1360
1211
1051
596
595
1360
1050
580
600
590
1120
985
180
1360
1010
610
1360
780
1060
860
480
1330
720
1360
1230
730
1310
1360
50
720
1010

Item no.	Article no.	Description	Serialnumber from	Serialnumber to
10	007392	Burning plate LWP/LWK	0	99999999999999999
20	007397	Rear burning stone	0	99999999999999999
30	007388	Burning stone left/right LWK/LWP	0	99999999999999999
40	007377	Front burning stone	0	99999999999999999
50	051223	Sensor cover	0	99999999999999999
60	050808	Cover insulation	0	99999999999999999
70	504195	JW-010 Flue gas sensor set with protective pipe	0	99999999999999999
80	051661	Flue gas blower, complete for LWK	0	99999999999999999
90	048881	Axle for door handle CK45	0	99999999999999999
100	046328	Axle for cleaning heating surfaces	0	99999999999999999
105	052463	Axle for cleaning heating surfaces - LogWIN Klassik pellet ready	0	99999999999999999
110	503650	LWKAD1 Adapter for continuously adjustabel flue connection, left or right	0	99999999999999999
120	051244	Safety hook	0	99999999999999999
130	051307	Inside display panel	0	99999999999999999
150	051564	Lighting door, complete	0	99999999999999999
160	045419	Ash pan LWP18-50, LWK	0	99999999999999999
170	051563	Ash door, complete LWK	0	99999999999999999
180	051241	Fastener for carburisation gas duct LWK	0	99999999999999999
190	007383	Rear combustion chamber stone LWP18-30, LWK	0	99999999999999999
200	051233	Combustion chamber stone left/right LWK	0	99999999999999999
210	007384	Bottom rear combustion chamber stone LWP18-30	0	99999999999999999
220	007385	Bottom front combustion chamber stone LWP18-30	0	99999999999999999
225	033104	Door mounting bolt ISO 2341-A - 12x32	0	99999999999999999
230	045820	Door switch clip LWP / LWK	0	99999999999999999
240	051228	Rear cover LWK	0	99999999999999999
250	051297	InfoWIN cover LWK	0	99999999999999999
260	051226	Front cover LWK	0	99999999999999999
270	046119	Rope seal kit for burning stones LWP18-30	0	99999999999999999
280	007391	Seal for secondary air nozzle LWP180-305	0	99999999999999999
290	046267	Lighting door seal LWP18-50, LW	0	99999999999999999
300	046268	Ash door seal LWP18-50, LWK	0	99999999999999999
310	050825	Blower seal LWK	0	99999999999999999
320	009378	Seal for vent cover LWP18-50, LWK	0	99999999999999999
330	051567	Seal for cleaning cover LWK	0	99999999999999999
340	051568	Heating door seal set LWK	0	99999999999999999
350	051569	Hook-in plate LWK	0	99999999999999999
355	051836	Spring-loaded pressure piece M8	0	99999999999999999
360	003726	InfoWIN ribbon cable	0	99999999999999999
370	016178	Round-head screw M6x55	0	99999999999999999
380	016186	Round-head screw M6x60	0	99999999999999999
390	016190	Round-head screw M6x90	0	99999999999999999
400	009305	Flange seal LWP18-50, LWK	0	99999999999999999
410	019410	Wing nut M6	0	99999999999999999
420	007366	Wing nut M8	0	99999999999999999
430	051559	Front control pane LWK	0	99999999999999999
440	007649	Radio interference filter LWP18-50, LWK	0	99999999999999999
450	051577	Blower box, complete LWK	0	99999999999999999
460	053032	Blower wheel	0	99999999999999999
470	045447	Handle for cleaning heating surfaces for LogWIN Premium 180-305	0	99999999999999999
480	051237	Handle recess LWK	0	99999999999999999
490	048811	Boiler handle	0	99999999999999999

Item no.	Article no.	Description	Serialnumber from	Serialnumber to
500	051579	Heating door, complete LWK	0	99999999999999999
505	016192	Cap nut	0	99999999999999999
510	025968	Cap nut M6	0	99999999999999999
520	009879	InfoWIN plus F4 LWK, BioWIN2	0	99999999999999999
530	050585	Insulating stone AT LWK	0	99999999999999999
540	007380	Rear insulating stone for LogWIN Premium 180-305	0	99999999999999999
550	051234	Insulating stone left/right LWK	0	99999999999999999
560	050542	Insulating stone for cleaning cover LWK	0	99999999999999999
570	051236	Bottom insulating stone LWK	0	99999999999999999
580	051217	Top rear insulation LWK	0	99999999999999999
590	051216	Bottom rear insulation LWK	0	99999999999999999
595	007251	Left insulation - LogWIN Klassik pellet ready	0	99999999999999999
596	007250	Top left insulation - LogWIN Klassik pellet ready	0	99999999999999999
600	051214	Top left/right insulation	0	99999999999999999
610	051222	Bottom left/right insulation	0	99999999999999999
620	051215	Top front insulation	0	99999999999999999
630	007165	Lambda sensor cable (not illustrated)	0	99999999999999999
640	048419	Draught fan cable (not illustrated)	0	99999999999999999
650	050837	Cable duct	0	99999999999999999
655	016191	Washer M6 4x40x1,5	0	99999999999999999
660	009928	Terminal bar	0	99999999999999999
680	051646	Lambda sensor	0	99999999999999999
690	040032	Air choke	0	99999999999999999
700	045460	Air control, complete	0	99999999999999999
710	046338	Vent cover	0	99999999999999999
720	051157	Magnet retainer	0	99999999999999999
730	001760	Magnetic lock, black - VW, LWP18-50, LWK	0	99999999999999999
740	009277	Air control microswitch	0	99999999999999999
750	048754	Module connection PCB	0	99999999999999999
755	015992	Nut M8 DIN 934 V2 - LogWIN Klassik pellet ready	0	99999999999999999
770	031156	Hexagon nut M10 DIN 439	0	99999999999999999
780	041430	Mains connection socket 3-pin for MIRA,ETX,PMX,BioWIN10-26,LogWIN Premium 180-505,EasyWIN Premium 180,BioWIN XL 35-60, FireWIN	0	99999999999999999
790	051645	Power supply unit 12V	0	99999999999999999
800	011999	FMF PCB for LogWIN Premium 180-505	0	99999999999999999
810	051308	PT®- oval head screw	0	99999999999999999
820	051301	Pos.plate LWK	0	99999999999999999
830	003088	GWX992 Cleaning brush 950x45mm/45x70 mm for GWX, LogWIN Premium 180-505, EasyWIN Klassik/Premium 180	0	99999999999999999
840	051663	Cleaning cover LWK	0	99999999999999999
850	042743	Holder for cleaning equipments for VarioWIN, LogWIN Premium 180-505,SilvaWIN,BioWIN XL35-60,EasWIN Klassik/Premium 180	0	99999999999999999
860	040328	Cleaning rake for HMX,PMX, EasyWIN Klassik/Premium 180, LogWIN Premium 180-505	0	99999999999999999
870	046325	Top cleaning profile for LogWIN Premium 180-305	0	99999999999999999
880	046323	Bottom cleaning profile for LogWIN Premium 180-305	0	99999999999999999
890	502843	EWK020 Cleaning kit consisting of: cleaning brush, poker, spatula, hanger	0	99999999999999999
900	046322	Cleaning auger for LogWIN Premium 180-505	0	99999999999999999
910	050838	Top rear panel LWK	0	99999999999999999
920	050839	Bottom rear panel LWK	0	99999999999999999
925	052212	Shaker lever	0	99999999999999999
926	052202	Handle for cleaning heating surfaces - LogWIN Klassik pellet ready	0	99999999999999999
930	051134	LWK03 LOGWIN KLASSIK - SWITCH COVER	0	99999999999999999
940	006756	Screw M6 for heating surface cleaning for PMX,BioWIN 10-26,FireWIN, BioWIN XL 35-60, LogWIN Premium 180-505	0	99999999999999999
950	033528	Cylinder screw M 4 x 6 - 8.8	0	99999999999999999

Item no.	Article no.	Description	Serialnumber from	Serialnumber to
960	053240	Heating door protection plate LWK	0	99999999999999999
970	051666	Cleaning cover protection plate LWK	0	99999999999999999
975	010882	Flue gas blower protection hood LWK	0	99999999999999999
980	051231	Thermocontrol sensor protective tube LWK	0	99999999999999999
985	051230	Carborisation gas duct LWK	0	99999999999999999
988	016659	Hexagon nut M8 DIN434	0	99999999999999999
990	031545	Hexagon screw M5x12 DIN 7500 (not ilustrated)	0	99999999999999999
1000	015471	Hexagon screw M6x20 DIN 933	0	99999999999999999
1010	031549	Hexagon screw M6x12 DIN 7500	0	99999999999999999
1020	017882	Thread-rolling hexagon screw DIN 7500 - M8x16 TT - galvanised for VarioWIN, EasyWIN Klassik/Premium 180	0	99999999999999999
1023	016721	Hexagon screw M8x16 DIN 933	0	99999999999999999
1024	017086	Hexagon screw M8x20 DIN 933 (not illustrated)	0	99999999999999999
1025	017191	Hexagon screw M8x25 DIN 933	0	99999999999999999
1030	017046	Cyl. screw M 8X30	0	99999999999999999
1040	017205	Hexagon screws M12x25-8.8	0	99999999999999999
1050	051667	Side wall left LWK	0	99999999999999999
1051	052390	Side wall left LWK Pellet ready	0	99999999999999999
1060	051668	Side wall right LWK	0	99999999999999999
1070	045326	Secondary air nozzle complete for LogWIN Premium 180-305	0	99999999999999999
1075	003228	6.3A fuse (not illustrated)	0	99999999999999999
1080	003663	Fuse holder	0	99999999999999999
1090	016073	WERV013 Silicone seal, black 310ml	0	99999999999999999
1100	009540	Spatula	0	99999999999999999
1105	018184	Clamping pin DIN 1481 - Ø 5x14 for VarioWIN	0	99999999999999999
1110	016566	Hexagon nut with flange and gearing M6	0	99999999999999999
1120	016553	Hexagon nut M8 with flange and gearing	0	99999999999999999
1130	051162	Vertical grate LWK/LWP	0	99999999999999999
1140	009994	Foot M12X40 JTB38 for HMX, EasyWIN Klassik/Premium 180, LogWIN Premium 180-505	0	99999999999999999
1150	007453	Leg extension for LogWIN Premium 180-505, EasyWIN Klassik/Premium 180	0	99999999999999999
1155	040429	Servomotor for HMX, SilvaWIN, LogWIN Premium 180-505	0	99999999999999999
1160	080664	FAX192 Poker for FAX,HMX,SilvaWIN,FKX,EasyWIN Klassik/Premium 180,LogWIN Premium 180-505	0	99999999999999999
1170	009982	Immersion sensor 1,3m LWK	0	99999999999999999
1180	007626	Thermocouple	0	99999999999999999
1190	005672	Thermostat LS1+100-6U	0	99999999999999999
1200	007096	Transformer for O2 sensor 18VA for LogWIN Premium 180-505	0	99999999999999999
1210	048812	Grommet for EasyWIN, LogWIN Premium 180-505	0	99999999999999999
1211	052208	Seal	0	99999999999999999
1220	051220	Top door hinge LWK	0	99999999999999999
1230	050783	Bottom door hinge LWK	0	99999999999999999
1250	007128	Microswitch Z-15GQ-B for LogWIN Premium 180-505, BioWIN XL 35-60	0	99999999999999999
1260	046072	Door switch complete for LogWIN Premium 180-505	0	99999999999999999
1265	051671	Door screw M8	0	99999999999999999
1270	050590	Door stone for lighting door LWK	0	99999999999999999
1290	031753	Disc 6 ISO 7093	0	99999999999999999
1300	031755	Disc 8 ISO 7093	0	99999999999999999
1310	050780	Cladding door, complete	0	99999999999999999
1320	050568	Locking axle LWK	0	99999999999999999
1325	052207	Shaft 1 or cleaning heating surfaces - LogWIN Klassik pellet ready	0	99999999999999999
1326	052211	Shaft 2 or cleaning heating surfaces - LogWIN Klassik pellet ready	0	99999999999999999
1330	015507	Dog point screw	0	99999999999999999
1340	007164	Tension spring	0	99999999999999999

Item no.	Article no.	Description	Serialnumber from	Serialnumber to
1350	007095	Extra PCB for O2-mesure or pumping rotation speed control for BioWIN cascade, LogWIN Premium 180-505	0	99999999999999999
1360	018140	Cylinder screw 4.2x13 DIN7981ST (not illustrated)	0	99999999999999999

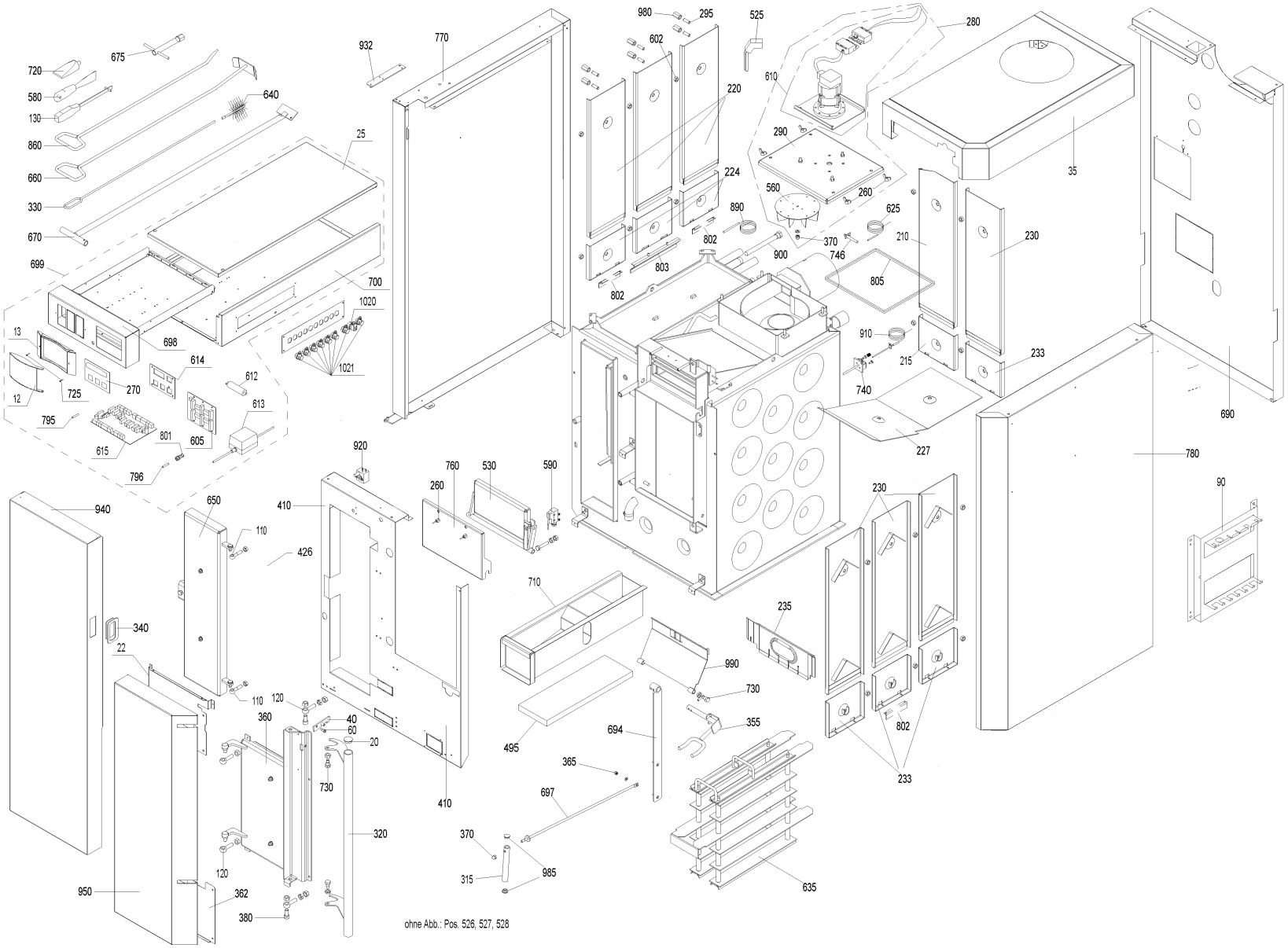
720
580
130
860
660
330
670
675
640
25
699
700
1020
1021
13
698
614
612
12
725
270
613
795
801
605
615
796
932
770
980
295
525
280
602
220
610
290
224
560
260
35
890
625
210
230
802
370
746
900
803
805
802
910
215
233
740
227
690
780
90
920
760
530
590
260
410
650
110
426
940
340
22
710
235
990
730
355
694
495
365
697
110
120
360
40
60
20
730
410
320
370
315
985
635
120
362
950
380
230
802
233
ohne Abb.: Pos. 526, 527, 528

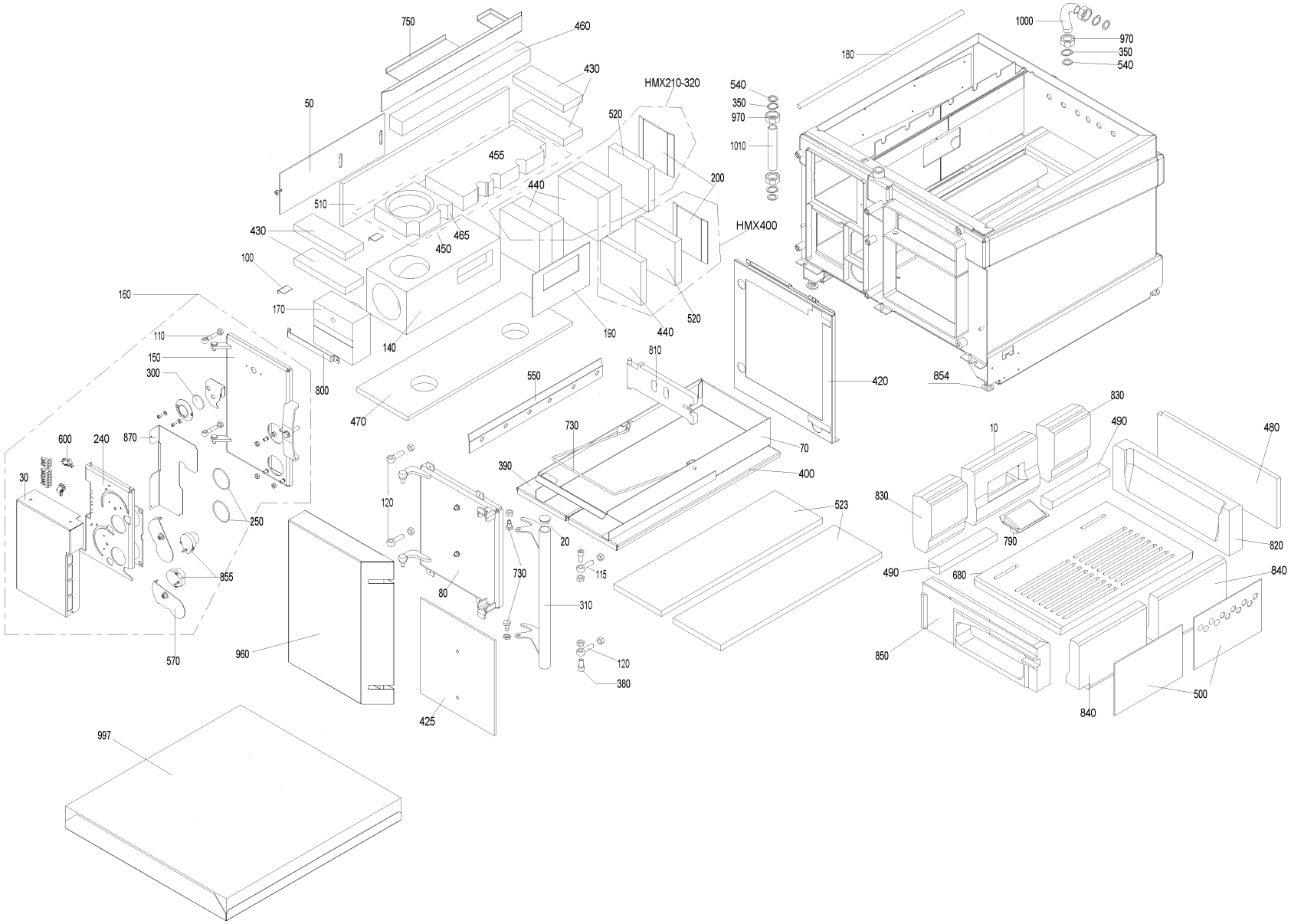
750
460
430
50
HMX210-320
520
455
440
200
510
430
465
450
HMX400
100
160
170
190
440
520
110
140
150
300
800
470
550
810
420
854
1000
970
350
540
180
540
350
970
1010
830
490
480
10
600
240
870
730
70
30
390
400
120
523
830
250
20
790
820
855
730
115
490
680
840
80
310
570
960
120
380
850
425
500
840
997

Item no.	Article no.	Description	Serialnumber from	Serialnumber t
10	009670	de: Abbrandstein HMX210/260	0	9999999999999
12	009448	Cover MES	0	9999999999999
13	009446	Housing cover MES	0	9999999999999
20	004995	Cover for HMX, PMX, VestoWIN Premium 200-202, VestoWIN Klassik 170-220	0	9999999999999
22	040550	de: Abdeckung Heiztür HMX innen oben	0	9999999999999
25	042628	de: Abdeckung Schaltkasten HMX	0	9999999999999
30	040025	de: Abdeckung Stellmotor HMX	0	9999999999999
35	040515	de: Abdeckung oben HMX	0	9999999999999
40	081638	de: Anlüftsicherung für HMX	0	9999999999999
50	081878	Pressure plate for cumbustion chamber HMX	0	9999999999999
60	015636	de: Ansatzschraube M6x21,5 VZ HMX 4-369-015636 (5-3-135)	0	9999999999999
70	040005	de: Aschelade HMX	0	9999999999999
80	040392	de: Aschetür HMX	0	9999999999999
90	040438	de: Aufhängeleiste Reinigungsgeräte HMX,PMX	0	9999999999999
100	040218	de: Auflage Anpreßplatte HMX	0	9999999999999
110	033432	Eyebolt similar to DIN 444 - B M10x50 - 4.6 - bright for VarioWIN, FireWIN, VestoWIN Premium 200-202, VestoWIN Klassik 170-220	0	9999999999999
115	040124	de: Augenschraube M12x40 HMX	0	9999999999999
120	033433	Eyebolt similar to DIN 444 - B M12x50 - 4.6 - bright for VarioWIN, FireWIN,EasyWIN Klassik/Premium 180,LogWIN Premium 180-505	0	9999999999999
130	073407	Operating handle for FKV,KSL,ZHL,FKN,FAX,ZHN,KSN,FKH,HMX,VestoWIN Premium 200-202, VestoWIN Klassik 170-220	0	9999999999999
140	045854	Combustion chamber (lightweight cement) for HMX21-32	0	9999999999999
150	068511	de: Brennkammertür für HMX	0	9999999999999
160	041177	de: Brennkammertür kpl. HMX210/260	0	9999999999999
170	009417	cover of combustion chamber HMX	0	9999999999999
180	040228	de: Dichtung (Ø14x0,69m/LSR) HMX Trennblech/Wärmeerzeuger	0	9999999999999
190	009228	de: Dichtung Brennkammer (240x154x3mm KP1250) HMX	0	9999999999999
200	070748	de: Distanzplatte hinten links für FAX,HMX	0	9999999999999
210	041264	de: Einhängeblech hinten links HMX210/260 bis Los30	0	9999999999999
210	043308	de: Einhängeblech hinten links oben für HMX210/260 ab Los31	0	9999999999999
215	041744	de: Einhängeblech hinten links unten HMX210/260 ab Los31	0	9999999999999
220	041265	de: Einhängeblech links HMX210 bis Los30	0	9999999999999
220	043310	de: Einhängeblech links oben für HMX210 ab Los31	0	9999999999999
223	041743	de: Einhängeblech links unten HMX210 ab Los 31 u.HMX320 bis Los30	0	9999999999999
224	041267	de: Einhängeblech links mitte kpl. HMX210 bis Los30	0	9999999999999
224	043310	de: Einhängeblech links oben für HMX210 ab Los31	0	9999999999999
227	041268	de: Einhängeblech oben HMX210-400	0	9999999999999
230	041269	de: Einhängeblech rechts und hinten rechts HMX210/260 bis Los30	0	9999999999999
230	043307	de: Einhängeblech re. ob. u. hinten re. ob. für HMX210/260 ab Los31	0	9999999999999
233	041739	de: Einhängeblech unten für HMX ab Los31	0	9999999999999
235	041270	de: Einhängeblech vorne HMX210/260	0	9999999999999
240	040586	de: Flansch für Brennkammer für HMX210/260 Ersatz: 040734	0	9999999999999
242	009246	de: Isolierung Brennkammertür innen HMX (380x218x20mm) KVS 121-LO	0	9999999999999
250	003617	de: O-Ringdichtung 64x3 NBR 70, schwarz Flansch Brennkammertür HMX	0	9999999999999
260	019415	Wing nut DIN 315 - M8 - brass for FAX, FireWIN, VarioWIN, BioWIN 10, EasyWIN Premium 180	0	9999999999999
270	006837	BDM plate HMX/PMX	0	9999999999999
270	068991	de: Front für Schalterblende für HMX Ersatz: 042301	0	9999999999999
275	007645	de: Funk-Entstörfilter F 34-206/010 6,3A A.Nr: 706106 HMX	0	9999999999999
280	040394	de: Gebläse mit Gebläsedeckel komplett HMX	0	9999999999999
290	080979	de: Gebläsedeckel für HMX (ohne Motor)	0	9999999999999
295	033088	de: Gewindestifte M10x30 DIN 551 blank	0	9999999999999
300	000307	de: Glasscheibe BOROFLOAT Ø 45/4 mm) GWX,FAX,GKW,HMX	0	9999999999999
310	081703	de: Griff für Aschetür für HMX	0	9999999999999

Item no.	Article no.	Description	Serialnumber from	Serialnumber t
315	040309	de: Griff Heizflächenreinigung HMX	0	9999999999999
320	081737	de: Griff für Heiztür für HMX	0	9999999999999
330	063673	de: Griff für Reinigungsbürste für OKE/S 17-30,E/SKX 17-27, ETX/SNX,HMX,JetWin	0	9999999999999
340	009544	de: Griffmulde HMX,PMX,OKB,GSX	0	9999999999999
350	001438	Semicircular ring for corrugated tube 3/4“ for FireWIN, NBE, HMX, VarioWIN	0	9999999999999
355	040310	de: Hebearm Heizflächenreinigung HMX320/400 (Los 1+2)	0	9999999999999
355	040981	de: Hebearm Heizflächenreinigung HMX ab Los 3/98	0	9999999999999
360	040393	de: Heiztür HMX	0	9999999999999
362	040118	de: Heiztür Innenverkleidung unten HMX 320/400	0	9999999999999
362	040155	de: Hilfsplatine MES-Modul bis Los 12	0	9999999999999
365	025968	Cap nut M6	0	9999999999999
370	025967	Cap nut DIN 1587 - M8 - 6 - galvanised for FAX, FireWIN, VarioWIN, BioWIN 10-26, EasyWIN Klassik/Premium 180	0	9999999999999
380	020117	Cylinder-head screw, hexagon socket ISO 4762 - M12x25 - 8.8 - galva. (DIN 912) for VarioWIN, FireWIN, BioWIN10-26, LogWIN Premium	0	9999999999999
390	061028	de: Isolierblech für Ascheraum links für FAX,HMX	0	9999999999999
400	061010	de: Isolierblech für Ascheraum rechts für FAX,HMX	0	9999999999999
410	040548	de: Isolierblech Kessel HMX210/260	0	9999999999999
420	068777	de: Isolierblech für Wärmeerzeuger für HMX	0	9999999999999
424	009246	de: Isolierung Brennkammertür innen HMX (380x218x20mm) KVS 121-LO	0	9999999999999
425	009510	de: Isolierplatte AT HMX	0	9999999999999
426	009511	de: Isolierplatte (472x318x6) Heiztür HMX	0	9999999999999
430	007022	de: Isolierstein Brennkammer oben hinten und vorne HMX (215x78x25)	0	9999999999999
440	007212	de: Isolierstein Brennkammer hi.(1Stk.) FAX,HMX210-320 ab 08/01 50x168x156 (4Stk.pro Gerät nötig)	0	9999999999999
450	009610	de: Isoliersteinset Brennkammer oben HMX210 (540x159x50, D90)	0	9999999999999
455	009615	de: Isolierstein Brennkammer oben hinten HMX210-320 (370x159x50)	0	9999999999999
460	007030	Insulating brick for cumbustion chamber top left for HMX(540x53x50)	0	9999999999999
465	009611	de: Isolierstein Brennkammer oben vorne HMX210/260 (170x159x50, D90)	0	9999999999999
470	007048	de: Isolierstein Brennkammer unten HMX (694x213x25)	0	9999999999999
480	009241	Insulation for filling chamber rear for HMX	0	9999999999999
490	009217	Insulating brick for filling space bottom for HMX	0	9999999999999
495	009622	de: Isolierstein (460x150x25mm) Schikane HMX210/260	0	9999999999999
500	009236	Insulation for filling chamber right for HMX	0	9999999999999
510	009281	Insulating brick for cumbustion chamber for HMX (KF128/1260 700x156x25)	0	9999999999999
520	007840	Insulation for rear of combustion chamber FAX,HMX210-320 FAX978 (165x153x50) RPV	0	9999999999999
523	007733	de: Isolierung 683x200x20mm RAF Isolierblech Ascheraum FAX,HMX	0	9999999999999
525	009360	de: Kabel Gebläsemotor HMX/PMX	0	9999999999999
526	040162	de: Kabel (7x1mm² - Silikon) Synchronmotor HMX,SWK	0	9999999999999
527	040159	de: Kabel (4x1mm² - Silikon) Synchronmotor-Endschalter HMX,SWK	0	9999999999999
528	040169	de: Kabeldurchführung mit Kabelbaum kpl. HMX	0	9999999999999
529	004385	KFE cock	0	9999999999999
530	040632	de: Klappe Schwelgasabsaugung HMX	0	9999999999999
540	016152	ZH 094 Klingerit seal 1/2" (30x21x2mm) for AccuWIN, AccuWIN Solar, VarioWIN, FireWIN	0	9999999999999
550	070574	de: Leiste-Trennblech für FAX,HMX (560x65x3)	0	9999999999999
560	043441	Blower wheel Ø170mm for HMX, SilvaWIN, LogWIN Premium 180-505	0	9999999999999
570	040032	Air choke	0	9999999999999
573	001759	Magnetic lock No. 246.41 for GKW,NBE,GKX,GWX,GTX,PMX,HMX,FireWIN,VarioWIN, BioWIN 10-26	0	9999999999999
575	007304	Magnet, complete, glued for motor for PMX, HMX from lot 24, BioWIN 10-26	0	9999999999999
580	009540	Spatula	0	9999999999999
590	005141	Microswitch Z-15GW4-B for heating door for FAX,HMX,PMX, SilvaWIN, FireWIN	0	9999999999999
590	005159	Cover APB-PG (PHM)	0	9999999999999
600	009277	Air control microswitch	0	9999999999999
602	031155	de: Mutter DIN 934 - M10 - A4	0	9999999999999

Item no.	Article no.	Description	Serialnumber from	Serialnumber
605	041429	de: Platine MES Module m.Litzen gelötet PMX,HMX	0	9999999999999
610	042967	Blower motor for HMX, FireWIN, VarioWIN	0	9999999999999
612	007330	Condenser for motor MAB 500V, 3µF for HMX,PMX,SWK,BioWIN10-26,FireWIN,VarioWIN,BioWIN XL 35-60, EasyWIN Premium 180,LogWIN Premiu	0	9999999999999
613	051645	Power supply unit 12V	0	9999999999999
614	006804	de: Platine Bedienmodul inkl.Flachbandkabel PMX,HMX ab Los13/00	0	9999999999999
614	009304	de: Platine Bedienmodul HMX bis Los12	0	9999999999999
615	009303	de: Platine FMF HMX ab Los13/00	0	9999999999999
615	042707	de: Umbaupaket FMF HMX bis Los 12 (inkl.Platine,Schaltfeld,etc.)	0	9999999999999
615	042707	de: Umbaupaket FMF HMX bis Los 12 (inkl.Platine,Schaltfeld,etc.)	0	9999999999999
616	040163	de: Grundplatine HMX bis Los12	0	9999999999999
620	009283	de: Puffer (SM 20292 a B d25/h15 M6 65° Shore) Motor HMX,PMX	0	9999999999999
625	006820	MES007 Immersion sensor (exhaust gas sensor) Pt 1000 for PMX, FireWIN, VarioWIN, BioWIN 10-26, BioWIN XL 35-60	0	9999999999999
630	041272	de: Rauchgasumlenkung HMX210/260 (keine HFR-bis Los7)	0	9999999999999
635	041273	de: Rauchgasumlenkung Heizflächenreinigung HMX210/260K	0	9999999999999
640	012009	de: Reinigungsbürste W.Nr.1.4301 (147x90x70/50mm), schraubbar (M6-IG)	0	9999999999999
650	041274	de: Reinigungsdeckel HMX210/260	0	9999999999999
660	040328	Cleaning rake for HMX,PMX, EasyWIN Klassik/Premium 180, LogWIN Premium 180-505	0	9999999999999
670	040022	de: Reinigungsschaber FAX,HMX verzinkt	0	9999999999999
675	009221	de: Rohrsteckschlüssel SW17 verz. mit Drehstift HMX	0	9999999999999
680	009654	de: Rost (557x300mm) HMX210	0	9999999999999
690	041201	de: Rückwand HMX210/260	0	9999999999999
694	040314	de: Rüttelarm Heizflächenreinigung HMX320/400 (Los 1+2)	0	9999999999999
694	040979	de: Rüttelarm Heizflächenreinigung HMX ab Los3/98	0	9999999999999
697	040315	de: Rüttelstange Heizflächenreinigung HMX,PMX	0	9999999999999
698	042301	de: Schalterblende mit Anschlußkasten für HMX	0	9999999999999
699	042296	de: HMX010 HMX Schalterblende Grundvariante im Karton	0	9999999999999
700	042754	de: Schalterblende Unterteil rot HMX ab Los13 HMX	0	9999999999999
700	068983	de: Schalterblende Unterteil für HMX bis Los12	0	9999999999999
710	041080	de: Abgasschikane HMX210/260	0	9999999999999
720	007220	de: Gleitfett 40gr MICROLUBE GL261 (Tube)	0	9999999999999
725	019836	Cylinder screw 2.9x16 (not illustrated)	0	9999999999999
730	009219	Screw door handle bearing M12 (WAF17/30) - galvanised for HMX, BioWIN10-26, FireWIN, VarioWIN, EasyWIN Klassik/Premium 180	0	9999999999999
740	081761	de: Schutzrohr für Fühler für HMX,PMX	0	9999999999999
745	081406	de: Schutzrohr für Fühler	0	9999999999999
746	041498	Protective tube for exhaust gas sensor	0	9999999999999
750	040216	de: Schutztasse HMX210-320	0	9999999999999
760	044467	de: Schwelgasabdeckung mit Isolierung für HMX	0	9999999999999
770	040512	de: Seitenwand links rot HMX320/400	0	9999999999999
770	041200	de: Seitenwand links rot HMX210/260	0	9999999999999
780	042607	de: Seitenwand rechts rot HMX210/260 HMX	0	9999999999999
790	042271	de: Sekundärluftrost für HMX 210-400 HMX940	0	9999999999999
795	006900	Fuse 1 A T 5x20 ceramic tube	0	9999999999999
796	003228	6.3A fuse (not illustrated)	0	9999999999999
800	040220	de: Sicherungsbügel HMX	0	9999999999999
801	003663	Fuse holder	0	9999999999999
803	041752	de: Sicherungswinkel Mitte Stein HMX210 (Transportsch.)ab Los31	0	9999999999999
805	046056	de: U-Profildichtung Silikon 6x7,5x1300mm PMX,HMX	0	9999999999999
810	007436	de: Stehrost 3-369-007436 HMX	0	9999999999999
820	008004	Brick for filling chamber rear for HMX	0	9999999999999
830	009669	de: Füllraumstein links HMX210 (152x195x144mm)	0	9999999999999
840	008020	Brick for the hand side of the filling chamber for HMX	0	9999999999999

Item no.	Article no.	Description	Serialnumber from	Serialnumber t
850	008012	Brick for filling chamber front for HMX	0	9999999999999
854	009994	Foot M12X40 JTB38 for HMX, EasyWIN Klassik/Premium 180, LogWIN Premium 180-505	0	9999999999999
855	040429	Servomotor for HMX, SilvaWIN, LogWIN Premium 180-505	0	9999999999999
860	080664	FAX192 Poker for FAX,HMX,SilvaWIN,FKX,EasyWIN Klassik/Premium 180,LogWIN Premium 180-505	0	9999999999999
870	040034	de: Strahlschutzblech Brennkammer HMX	0	9999999999999
880	040291	de: Strahlschutzblech Gebläse HMX, SilvaWIN	0	9999999999999
890	502186	MES009M Immersion sensor	0	9999999999999
900	042028	Immersion sleeve 1/2“ 180x16 mm for ETX/SNX, KSL032,NBS,NBL,FAX,ASL,FKV,KSL,ZHN,HMX,JetWin, BioWIN XL 35-60	0	9999999999999
910	007626	Thermocouple	0	9999999999999
920	046451	Safety thermostat LS1+100/-6, Auger for FireWIN, BioWIN 10-26, BioWIN XL 35-60	0	9999999999999
930	061961	de: Tragbügel für Aschelade für FAX,HMX	0	9999999999999
932	068628	de: Türlager oben grau besch.für HMX	0	9999999999999
934	068636	de: Türlager unten für HMX (auf SW.links)	0	9999999999999
940	041199	de: Türverkleidung links rot HMX21/26	0	9999999999999
950	041198	de: Türverkleidung rechts oben rot HMX210/260	0	9999999999999
960	042611	de: Türverkleidung rechts unten rot HMX	0	9999999999999
970	000566	NBE964 Union nut 1/2” black no. 374 for NBE, HMX, FireWIN	0	9999999999999
980	033090	de: Sechskant-Verlängerungsmutter 3d M10 - St - verzinkt (DIN 6334)	0	9999999999999
985	003263	de: Verschlußstopfen schwarz GPN 300 F14 KSN,ZHN,PMX	0	9999999999999
990	040631	de: Vorstelltürblech HMX	0	9999999999999
995	040925	Wago terminal block 8-pin blue/grey (230 V) pre-assembled for BioWIN 10-26, BioWIN XL 35-60 (*not illustrated)	0	9999999999999
996	040926	Wago terminal block 11-pin orange (extra-low voltage) pre-assembled for BioWIN 10-26, BioWIN XL 35-60	0	9999999999999
997	044151	de: Wärmedämmung unten HMX	0	9999999999999
1000	040507	de: Edelstahlwellrohr mit Überwurfm.,Halbringe u.Dichtungen HMX	0	9999999999999
1010	006298	Flexible stainless steel tube 3/4"x150mm	0	9999999999999
1020	009542	Cable feed-through	0	9999999999999
1021	001884	Strain relief USR 400 for 3-way changeover unit	0	9999999999999
10000	044947	de: Dichtungsset (Dichtschnur) Aschetür Glasfaserpackg. Ref.023 Silikon HMX	0	9999999999999
10020	044948	de: Dichtungsset (Dichtschnur) Heiztür Glasfaserpackg. Ref.023 Silikon HMX	0	9999999999999
10030	044949	Seal for deflector flap	0	9999999999999

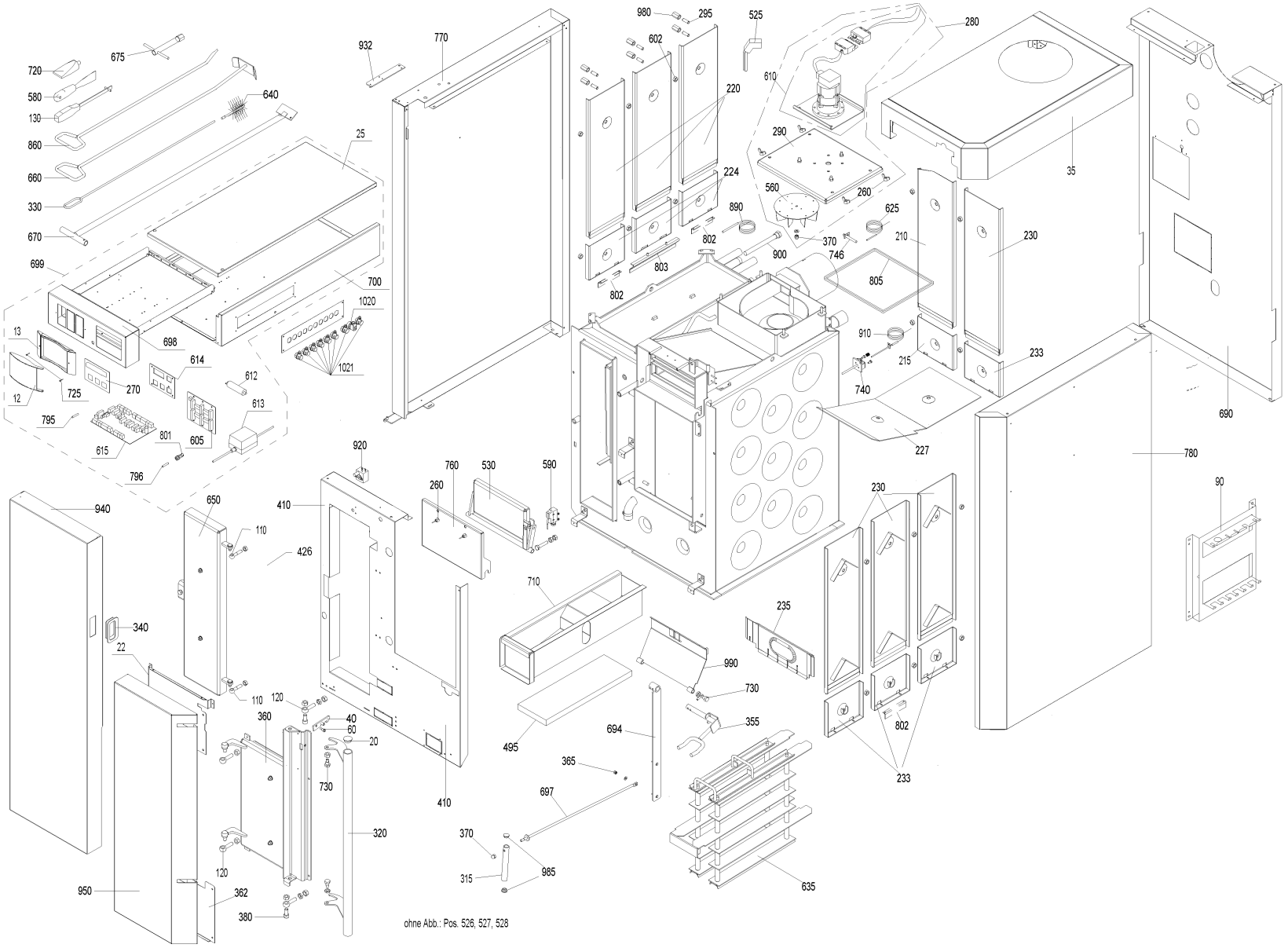
720
580
130
860
660
330
670
675
640
25
699
700
1020
1021
13
12
725
270
698
614
612
613
795
615
801
605
796
932
770
980
295
525
280
602
220
610
290
224
560
260
890
625
35
210
230
370
746
802
900
803
805
910
215
233
740
227
690
780
90
920
760
530
590
260
410
650
110
426
940
340
22
710
235
990
730
355
694
495
365
697
120
360
40
60
20
730
410
320
370
315
985
635
950
362
380
ohne Abb.: Pos. 526, 527, 528

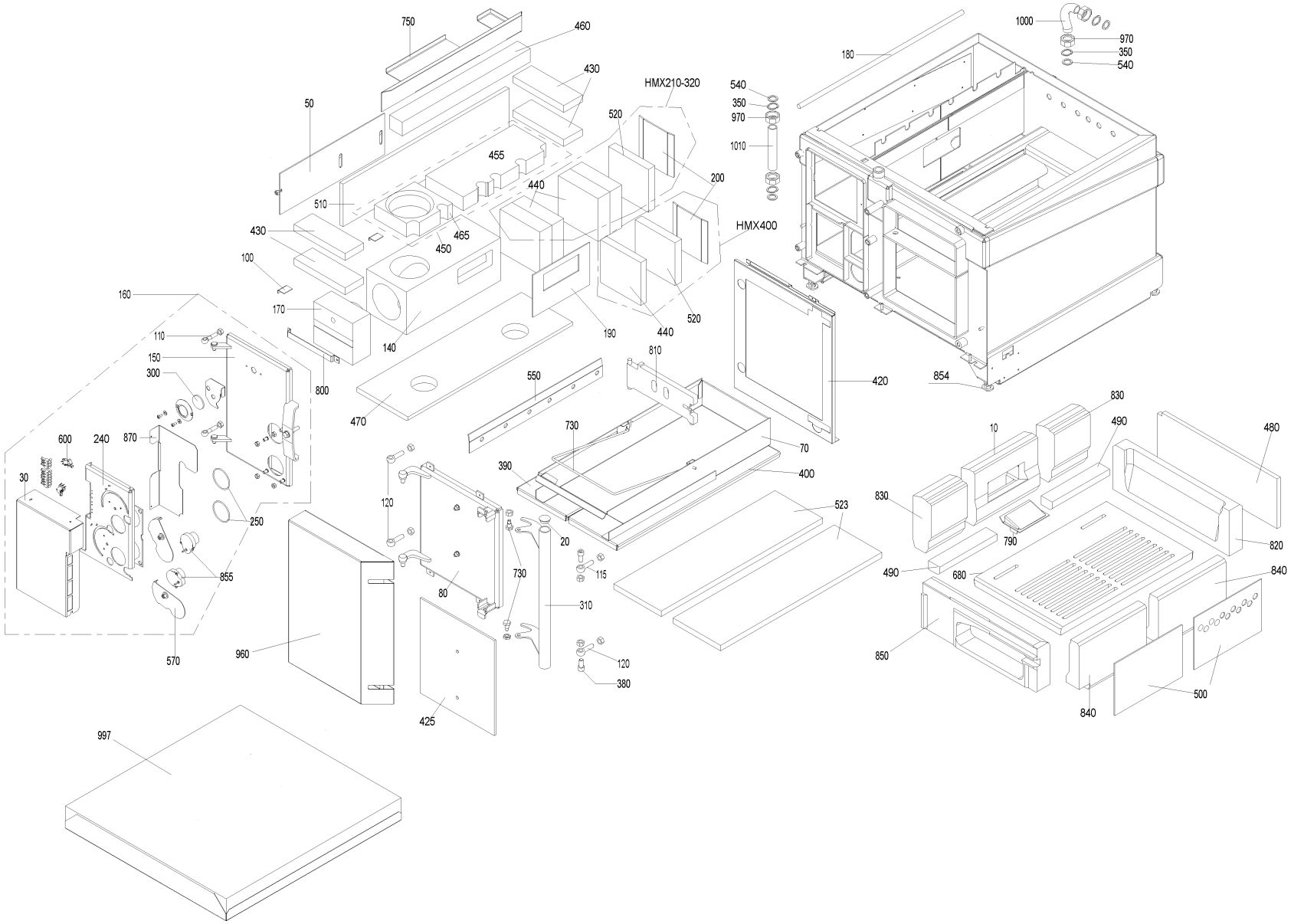
750
460
430
50
HMX210-320
520
455
440
200
510
430
465
450
HMX400
100
160
170
190
440
520
110
140
150
300
800
470
550
810
420
854
1000
970
350
540
180
540
350
970
1010
830
490
480
10
600
240
870
30
730
70
390
400
120
523
830
790
820
250
20
115
490
680
840
855
80
730
310
570
960
120
380
850
500
840
425
997

Item no.	Article no.	Description	Serialnumber from	Serialnumber t
10	009670	de: Abbrandstein HMX210/260	0	9999999999999
12	009448	Cover MES	0	9999999999999
13	009446	Housing cover MES	0	9999999999999
20	004995	Cover for HMX, PMX, VestoWIN Premium 200-202, VestoWIN Klassik 170-220	0	9999999999999
22	040550	de: Abdeckung Heiztür HMX innen oben	0	9999999999999
25	042628	de: Abdeckung Schaltkasten HMX	0	9999999999999
30	040025	de: Abdeckung Stellmotor HMX	0	9999999999999
35	040515	de: Abdeckung oben HMX	0	9999999999999
40	081638	de: Anlüftsicherung für HMX	0	9999999999999
50	081878	Pressure plate for cumbustion chamber HMX	0	9999999999999
60	015636	de: Ansatzschraube M6x21,5 VZ HMX 4-369-015636 (5-3-135)	0	9999999999999
70	040005	de: Aschelade HMX	0	9999999999999
80	040392	de: Aschetür HMX	0	9999999999999
90	040438	de: Aufhängeleiste Reinigungsgeräte HMX,PMX	0	9999999999999
100	040218	de: Auflage Anpreßplatte HMX	0	9999999999999
110	033432	Eyebolt similar to DIN 444 - B M10x50 - 4.6 - bright for VarioWIN, FireWIN, VestoWIN Premium 200-202, VestoWIN Klassik 170-220	0	9999999999999
115	040124	de: Augenschraube M12x40 HMX	0	9999999999999
120	033433	Eyebolt similar to DIN 444 - B M12x50 - 4.6 - bright for VarioWIN, FireWIN,EasyWIN Klassik/Premium 180,LogWIN Premium 180-505	0	9999999999999
130	073407	Operating handle for FKV,KSL,ZHL,FKN,FAX,ZHN,KSN,FKH,HMX,VestoWIN Premium 200-202, VestoWIN Klassik 170-220	0	9999999999999
140	045854	Combustion chamber (lightweight cement) for HMX21-32	0	9999999999999
150	068511	de: Brennkammertür für HMX	0	9999999999999
160	041177	de: Brennkammertür kpl. HMX210/260	0	9999999999999
170	009417	cover of combustion chamber HMX	0	9999999999999
180	040228	de: Dichtung (Ø14x0,69m/LSR) HMX Trennblech/Wärmeerzeuger	0	9999999999999
190	009228	de: Dichtung Brennkammer (240x154x3mm KP1250) HMX	0	9999999999999
200	070748	de: Distanzplatte hinten links für FAX,HMX	0	9999999999999
210	041264	de: Einhängeblech hinten links HMX210/260 bis Los30	0	9999999999999
210	043308	de: Einhängeblech hinten links oben für HMX210/260 ab Los31	0	9999999999999
215	041744	de: Einhängeblech hinten links unten HMX210/260 ab Los31	0	9999999999999
220	041266	de: Einhängeblech links HMX260 bis Los30	0	9999999999999
220	043309	de: Einhängeblech links oben für HMX260 ab Los31	0	9999999999999
223	041739	de: Einhängeblech unten für HMX ab Los31	0	9999999999999
224	041266	de: Einhängeblech links HMX260 bis Los30	0	9999999999999
224	043309	de: Einhängeblech links oben für HMX260 ab Los31	0	9999999999999
227	041268	de: Einhängeblech oben HMX210-400	0	9999999999999
230	041269	de: Einhängeblech rechts und hinten rechts HMX210/260 bis Los30	0	9999999999999
230	043307	de: Einhängeblech re. ob. u. hinten re. ob. für HMX210/260 ab Los31	0	9999999999999
233	041739	de: Einhängeblech unten für HMX ab Los31	0	9999999999999
235	041270	de: Einhängeblech vorne HMX210/260	0	9999999999999
240	040586	de: Flansch für Brennkammer für HMX210/260 Ersatz: 040734	0	9999999999999
242	009246	de: Isolierung Brennkammertür innen HMX (380x218x20mm) KVS 121-LO	0	9999999999999
250	003617	de: O-Ringdichtung 64x3 NBR 70, schwarz Flansch Brennkammertür HMX	0	9999999999999
260	019415	Wing nut DIN 315 - M8 - brass for FAX, FireWIN, VarioWIN, BioWIN 10, EasyWIN Premium 180	0	9999999999999
270	006837	BDM plate HMX/PMX	0	9999999999999
270	068991	de: Front für Schalterblende für HMX Ersatz: 042301	0	9999999999999
275	007645	de: Funk-Entstörfilter F 34-206/010 6,3A A.Nr: 706106 HMX	0	9999999999999
280	040394	de: Gebläse mit Gebläsedeckel komplett HMX	0	9999999999999
290	080979	de: Gebläsedeckel für HMX (ohne Motor)	0	9999999999999
295	033088	de: Gewindestifte M10x30 DIN 551 blank	0	9999999999999
300	000307	de: Glasscheibe BOROFLOAT Ø 45/4 mm) GWX,FAX,GKW,HMX	0	9999999999999
310	081703	de: Griff für Aschetür für HMX	0	9999999999999

Item no.	Article no.	Description	Serialnumber from	Serialnumber t
315	040309	de: Griff Heizflächenreinigung HMX	0	9999999999999
320	081737	de: Griff für Heiztür für HMX	0	9999999999999
330	063673	de: Griff für Reinigungsbürste für OKE/S 17-30,E/SKX 17-27, ETX/SNX,HMX,JetWin	0	9999999999999
340	009544	de: Griffmulde HMX,PMX,OKB,GSX	0	9999999999999
350	001438	Semicircular ring for corrugated tube 3/4“ for FireWIN, NBE, HMX, VarioWIN	0	9999999999999
355	040310	de: Hebearm Heizflächenreinigung HMX320/400 (Los 1+2)	0	9999999999999
355	040981	de: Hebearm Heizflächenreinigung HMX ab Los 3/98	0	9999999999999
360	040393	de: Heiztür HMX	0	9999999999999
362	040118	de: Heiztür Innenverkleidung unten HMX 320/400	0	9999999999999
362	040155	de: Hilfsplatine MES-Modul bis Los 12	0	9999999999999
365	025968	Cap nut M6	0	9999999999999
370	025967	Cap nut DIN 1587 - M8 - 6 - galvanised for FAX, FireWIN, VarioWIN, BioWIN 10-26, EasyWIN Klassik/Premium 180	0	9999999999999
380	020117	Cylinder-head screw, hexagon socket ISO 4762 - M12x25 - 8.8 - galva. (DIN 912) for VarioWIN, FireWIN, BioWIN10-26, LogWIN Premium	0	9999999999999
390	061028	de: Isolierblech für Ascheraum links für FAX,HMX	0	9999999999999
400	061010	de: Isolierblech für Ascheraum rechts für FAX,HMX	0	9999999999999
410	040548	de: Isolierblech Kessel HMX210/260	0	9999999999999
420	068777	de: Isolierblech für Wärmeerzeuger für HMX	0	9999999999999
424	009246	de: Isolierung Brennkammertür innen HMX (380x218x20mm) KVS 121-LO	0	9999999999999
425	009510	de: Isolierplatte AT HMX	0	9999999999999
426	009511	de: Isolierplatte (472x318x6) Heiztür HMX	0	9999999999999
430	007022	de: Isolierstein Brennkammer oben hinten und vorne HMX (215x78x25)	0	9999999999999
440	007212	de: Isolierstein Brennkammer hi.(1Stk.) FAX,HMX210-320 ab 08/01 50x168x156 (4Stk.pro Gerät nötig)	0	9999999999999
450	009620	de: Isoliersteinset Brennkammer oben HMX260 (540x159x50, D90)	0	9999999999999
455	009615	de: Isolierstein Brennkammer oben hinten HMX210-320 (370x159x50)	0	9999999999999
460	007030	Insulating brick for cumbustion chamber top left for HMX(540x53x50)	0	9999999999999
465	009611	de: Isolierstein Brennkammer oben vorne HMX210/260 (170x159x50, D90)	0	9999999999999
470	007048	de: Isolierstein Brennkammer unten HMX (694x213x25)	0	9999999999999
480	009241	Insulation for filling chamber rear for HMX	0	9999999999999
490	009217	Insulating brick for filling space bottom for HMX	0	9999999999999
495	009622	de: Isolierstein (460x150x25mm) Schikane HMX210/260	0	9999999999999
500	009236	Insulation for filling chamber right for HMX	0	9999999999999
510	009281	Insulating brick for cumbustion chamber for HMX (KF128/1260 700x156x25)	0	9999999999999
520	007840	Insulation for rear of combustion chamber FAX,HMX210-320 FAX978 (165x153x50) RPV	0	9999999999999
523	007733	de: Isolierung 683x200x20mm RAF Isolierblech Ascheraum FAX,HMX	0	9999999999999
525	009360	de: Kabel Gebläsemotor HMX/PMX	0	9999999999999
526	040162	de: Kabel (7x1mm² - Silikon) Synchronmotor HMX,SWK	0	9999999999999
527	040159	de: Kabel (4x1mm² - Silikon) Synchronmotor-Endschalter HMX,SWK	0	9999999999999
528	040169	de: Kabeldurchführung mit Kabelbaum kpl. HMX	0	9999999999999
529	004385	KFE cock	0	9999999999999
530	040632	de: Klappe Schwelgasabsaugung HMX	0	9999999999999
540	016152	ZH 094 Klingerit seal 1/2" (30x21x2mm) for AccuWIN, AccuWIN Solar, VarioWIN, FireWIN	0	9999999999999
550	070574	de: Leiste-Trennblech für FAX,HMX (560x65x3)	0	9999999999999
560	043441	Blower wheel Ø170mm for HMX, SilvaWIN, LogWIN Premium 180-505	0	9999999999999
570	040032	Air choke	0	9999999999999
573	001759	Magnetic lock No. 246.41 for GKW,NBE,GKX,GWX,GTX,PMX,HMX,FireWIN,VarioWIN, BioWIN 10-26	0	9999999999999
575	007304	Magnet, complete, glued for motor for PMX, HMX from lot 24, BioWIN 10-26	0	9999999999999
580	009540	Spatula	0	9999999999999
590	005141	Microswitch Z-15GW4-B for heating door for FAX,HMX,PMX, SilvaWIN, FireWIN	0	9999999999999
590	005159	Cover APB-PG (PHM)	0	9999999999999
600	009277	Air control microswitch	0	9999999999999
602	031155	de: Mutter DIN 934 - M10 - A4	0	9999999999999

Item no.	Article no.	Description	Serialnumber from	Serialnumber
605	041429	de: Platine MES Module m.Litzen gelötet PMX,HMX	0	9999999999999
610	042967	Blower motor for HMX, FireWIN, VarioWIN	0	9999999999999
612	007330	Condenser for motor MAB 500V, 3µF for HMX,PMX,SWK,BioWIN10-26,FireWIN,VarioWIN,BioWIN XL 35-60, EasyWIN Premium 180,LogWIN Premiu	0	9999999999999
613	051645	Power supply unit 12V	0	9999999999999
614	006804	de: Platine Bedienmodul inkl.Flachbandkabel PMX,HMX ab Los13/00	0	9999999999999
614	009304	de: Platine Bedienmodul HMX bis Los12	0	9999999999999
615	009303	de: Platine FMF HMX ab Los13/00	0	9999999999999
615	042707	de: Umbaupaket FMF HMX bis Los 12 (inkl.Platine,Schaltfeld,etc.)	0	9999999999999
615	042707	de: Umbaupaket FMF HMX bis Los 12 (inkl.Platine,Schaltfeld,etc.)	0	9999999999999
616	040163	de: Grundplatine HMX bis Los12	0	9999999999999
620	009283	de: Puffer (SM 20292 a B d25/h15 M6 65° Shore) Motor HMX,PMX	0	9999999999999
625	006820	MES007 Immersion sensor (exhaust gas sensor) Pt 1000 for PMX, FireWIN, VarioWIN, BioWIN 10-26, BioWIN XL 35-60	0	9999999999999
630	041272	de: Rauchgasumlenkung HMX210/260 (keine HFR-bis Los7)	0	9999999999999
635	041273	de: Rauchgasumlenkung Heizflächenreinigung HMX210/260K	0	9999999999999
640	012009	de: Reinigungsbürste W.Nr.1.4301 (147x90x70/50mm), schraubbar (M6-IG)	0	9999999999999
650	041274	de: Reinigungsdeckel HMX210/260	0	9999999999999
660	040328	Cleaning rake for HMX,PMX, EasyWIN Klassik/Premium 180, LogWIN Premium 180-505	0	9999999999999
670	040022	de: Reinigungsschaber FAX,HMX verzinkt	0	9999999999999
675	009221	de: Rohrsteckschlüssel SW17 verz. mit Drehstift HMX	0	9999999999999
680	009664	de: Rost (557x330mm) HMX260	0	9999999999999
690	041201	de: Rückwand HMX210/260	0	9999999999999
694	040314	de: Rüttelarm Heizflächenreinigung HMX320/400 (Los 1+2)	0	9999999999999
694	040979	de: Rüttelarm Heizflächenreinigung HMX ab Los3/98	0	9999999999999
697	040315	de: Rüttelstange Heizflächenreinigung HMX,PMX	0	9999999999999
698	042301	de: Schalterblende mit Anschlußkasten für HMX	0	9999999999999
699	042296	de: HMX010 HMX Schalterblende Grundvariante im Karton	0	9999999999999
700	042754	de: Schalterblende Unterteil rot HMX ab Los13 HMX	0	9999999999999
700	068983	de: Schalterblende Unterteil für HMX bis Los12	0	9999999999999
710	041080	de: Abgasschikane HMX210/260	0	9999999999999
720	007220	de: Gleitfett 40gr MICROLUBE GL261 (Tube)	0	9999999999999
725	019836	Cylinder screw 2.9x16 (not illustrated)	0	9999999999999
730	009219	Screw door handle bearing M12 (WAF17/30) - galvanised for HMX, BioWIN10-26, FireWIN, VarioWIN, EasyWIN Klassik/Premium 180	0	9999999999999
740	081761	de: Schutzrohr für Fühler für HMX,PMX	0	9999999999999
745	081406	de: Schutzrohr für Fühler	0	9999999999999
746	041498	Protective tube for exhaust gas sensor	0	9999999999999
750	040216	de: Schutztasse HMX210-320	0	9999999999999
760	044467	de: Schwelgasabdeckung mit Isolierung für HMX	0	9999999999999
770	040512	de: Seitenwand links rot HMX320/400	0	9999999999999
770	041200	de: Seitenwand links rot HMX210/260	0	9999999999999
780	042607	de: Seitenwand rechts rot HMX210/260 HMX	0	9999999999999
790	042271	de: Sekundärluftrost für HMX 210-400 HMX940	0	9999999999999
795	006900	Fuse 1 A T 5x20 ceramic tube	0	9999999999999
796	003228	6.3A fuse (not illustrated)	0	9999999999999
800	040220	de: Sicherungsbügel HMX	0	9999999999999
801	003663	Fuse holder	0	9999999999999
803	043268	de: Sicherungswinkel Mitte f.Stein HMX260-400 (Transportsch.)ab Los31	0	9999999999999
805	046056	de: U-Profildichtung Silikon 6x7,5x1300mm PMX,HMX	0	9999999999999
810	007436	de: Stehrost 3-369-007436 HMX	0	9999999999999
820	008004	Brick for filling chamber rear for HMX	0	9999999999999
830	009666	de: Füllraumstein links HMX260 (152x195x114mm)	0	9999999999999
840	008020	Brick for the hand side of the filling chamber for HMX	0	9999999999999

Item no.	Article no.	Description	Serialnumber from	Serialnumber t
850	008012	Brick for filling chamber front for HMX	0	9999999999999
854	009994	Foot M12X40 JTB38 for HMX, EasyWIN Klassik/Premium 180, LogWIN Premium 180-505	0	9999999999999
855	040429	Servomotor for HMX, SilvaWIN, LogWIN Premium 180-505	0	9999999999999
860	080664	FAX192 Poker for FAX,HMX,SilvaWIN,FKX,EasyWIN Klassik/Premium 180,LogWIN Premium 180-505	0	9999999999999
870	040034	de: Strahlschutzblech Brennkammer HMX	0	9999999999999
880	040291	de: Strahlschutzblech Gebläse HMX, SilvaWIN	0	9999999999999
890	502186	MES009M Immersion sensor	0	9999999999999
900	042028	Immersion sleeve 1/2“ 180x16 mm for ETX/SNX, KSL032,NBS,NBL,FAX,ASL,FKV,KSL,ZHN,HMX,JetWin, BioWIN XL 35-60	0	9999999999999
910	007626	Thermocouple	0	9999999999999
920	046451	Safety thermostat LS1+100/-6, Auger for FireWIN, BioWIN 10-26, BioWIN XL 35-60	0	9999999999999
930	061961	de: Tragbügel für Aschelade für FAX,HMX	0	9999999999999
932	068628	de: Türlager oben grau besch.für HMX	0	9999999999999
934	068636	de: Türlager unten für HMX (auf SW.links)	0	9999999999999
940	041199	de: Türverkleidung links rot HMX21/26	0	9999999999999
950	041198	de: Türverkleidung rechts oben rot HMX210/260	0	9999999999999
960	042611	de: Türverkleidung rechts unten rot HMX	0	9999999999999
970	000566	NBE964 Union nut 1/2” black no. 374 for NBE, HMX, FireWIN	0	9999999999999
980	033090	de: Sechskant-Verlängerungsmutter 3d M10 - St - verzinkt (DIN 6334)	0	9999999999999
985	003263	de: Verschlußstopfen schwarz GPN 300 F14 KSN,ZHN,PMX	0	9999999999999
990	040631	de: Vorstelltürblech HMX	0	9999999999999
995	040925	Wago terminal block 8-pin blue/grey (230 V) pre-assembled for BioWIN 10-26, BioWIN XL 35-60 (*not illustrated)	0	9999999999999
996	040926	Wago terminal block 11-pin orange (extra-low voltage) pre-assembled for BioWIN 10-26, BioWIN XL 35-60	0	9999999999999
997	044151	de: Wärmedämmung unten HMX	0	9999999999999
1000	040507	de: Edelstahlwellrohr mit Überwurfm.,Halbringe u.Dichtungen HMX	0	9999999999999
1010	006298	Flexible stainless steel tube 3/4"x150mm	0	9999999999999
1020	009542	Cable feed-through	0	9999999999999
1021	001884	Strain relief USR 400 for 3-way changeover unit	0	9999999999999
10000	044947	de: Dichtungsset (Dichtschnur) Aschetür Glasfaserpackg. Ref.023 Silikon HMX	0	9999999999999
10020	044948	de: Dichtungsset (Dichtschnur) Heiztür Glasfaserpackg. Ref.023 Silikon HMX	0	9999999999999
10030	044949	Seal for deflector flap	0	9999999999999

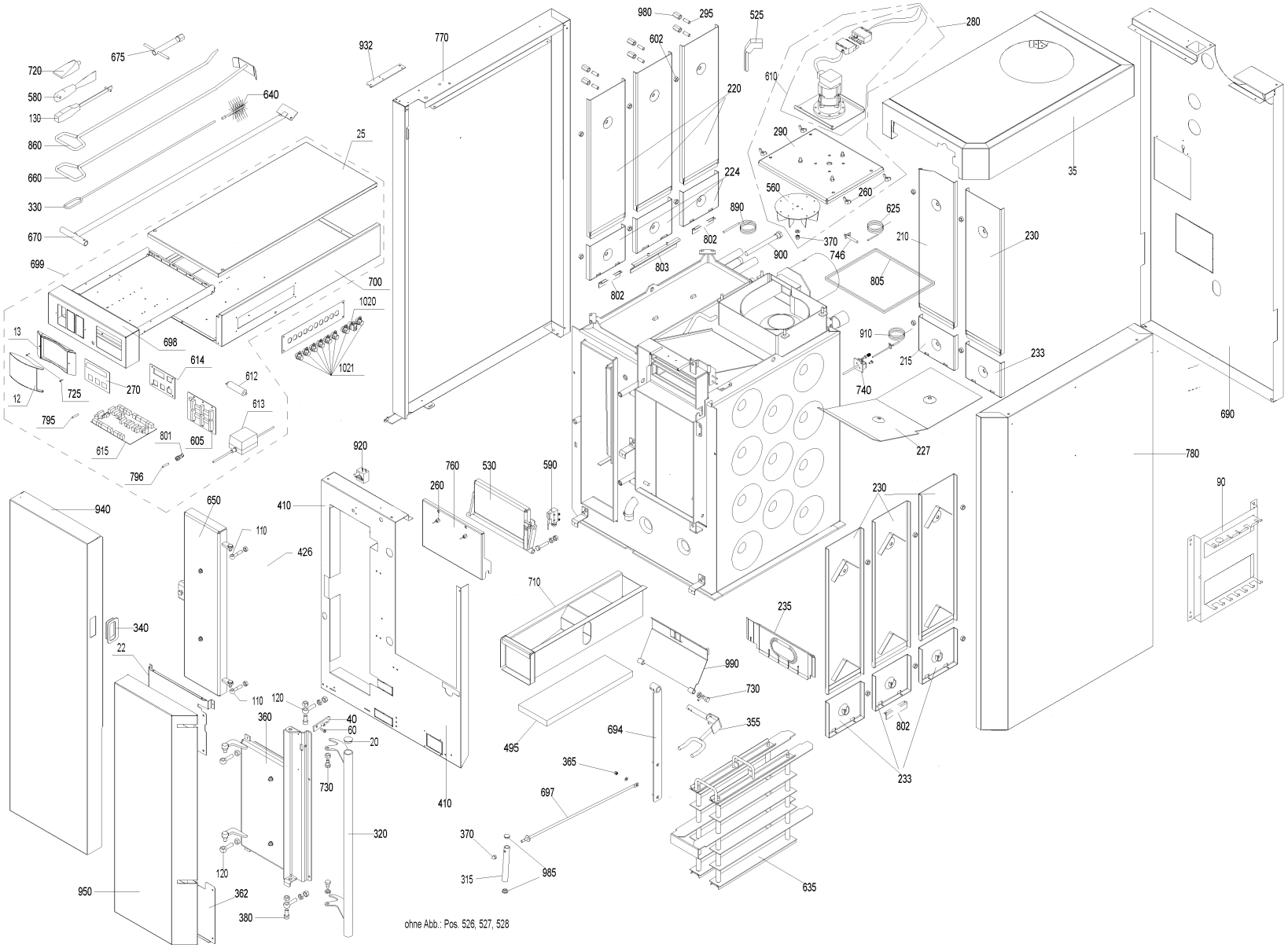
720
580
130
860
660
330
670
675
640
25
699
700
1020
1021
13
698
614
612
12
725
270
613
795
801
605
615
796
932
770
980
295
525
280
602
220
610
290
224
560
260
35
890
625
210
230
802
370
746
900
803
805
802
910
215
233
740
227
690
780
90
920
760
530
590
260
410
650
110
426
940
340
22
110
120
360
40
60
20
730
410
710
235
990
730
355
694
495
365
697
320
370
315
985
635
120
362
950
380
230
802
233
ohne Abb.: Pos. 526, 527, 528

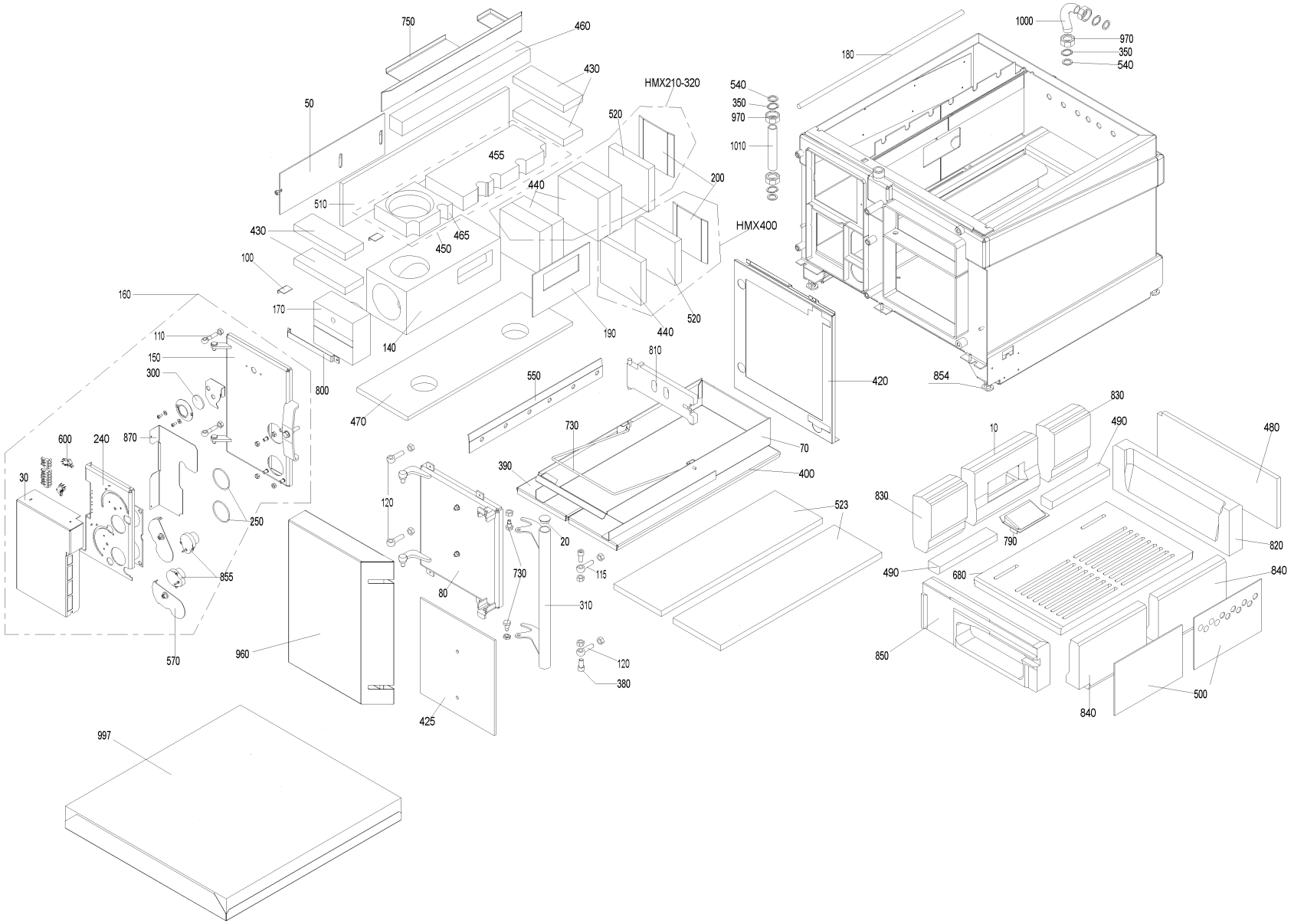
750
460
430
50
HMX210-320
520
455
440
200
510
430
465
450
HMX400
100
160
170
190
440
520
110
140
150
300
800
470
550
810
420
854
1000
970
350
540
180
540
350
970
1010
830
490
480
10
600
240
870
730
70
30
390
400
120
523
830
250
20
790
820
855
730
115
490
680
840
80
310
570
960
120
380
850
500
840
425
997

Item no.	Article no.	Description	Serialnumber from	Serialnumber t
10	009214	Burn-up stone for HMX320/400	0	9999999999999
12	009448	Cover MES	0	9999999999999
13	009446	Housing cover MES	0	9999999999999
20	004995	Cover for HMX, PMX, VestoWIN Premium 200-202, VestoWIN Klassik 170-220	0	9999999999999
22	040550	de: Abdeckung Heiztür HMX innen oben	0	9999999999999
25	042628	de: Abdeckung Schaltkasten HMX	0	9999999999999
30	040025	de: Abdeckung Stellmotor HMX	0	9999999999999
35	040515	de: Abdeckung oben HMX	0	9999999999999
40	081638	de: Anlüftsicherung für HMX	0	9999999999999
50	081878	Pressure plate for cumbustion chamber HMX	0	9999999999999
60	015636	de: Ansatzschraube M6x21,5 VZ HMX 4-369-015636 (5-3-135)	0	9999999999999
70	040005	de: Aschelade HMX	0	9999999999999
80	040392	de: Aschetür HMX	0	9999999999999
90	040438	de: Aufhängeleiste Reinigungsgeräte HMX,PMX	0	9999999999999
100	040218	de: Auflage Anpreßplatte HMX	0	9999999999999
110	033432	Eyebolt similar to DIN 444 - B M10x50 - 4.6 - bright for VarioWIN, FireWIN, VestoWIN Premium 200-202, VestoWIN Klassik 170-220	0	9999999999999
115	040124	de: Augenschraube M12x40 HMX	0	9999999999999
120	033433	Eyebolt similar to DIN 444 - B M12x50 - 4.6 - bright for VarioWIN, FireWIN,EasyWIN Klassik/Premium 180,LogWIN Premium 180-505	0	9999999999999
130	073407	Operating handle for FKV,KSL,ZHL,FKN,FAX,ZHN,KSN,FKH,HMX,VestoWIN Premium 200-202, VestoWIN Klassik 170-220	0	9999999999999
140	045854	Combustion chamber (lightweight cement) for HMX21-32	0	9999999999999
150	068511	de: Brennkammertür für HMX	0	9999999999999
160	040380	de: Brennkammertür kpl. montiert HMX 320/400	0	9999999999999
170	009417	cover of combustion chamber HMX	0	9999999999999
180	040228	de: Dichtung (Ø14x0,69m/LSR) HMX Trennblech/Wärmeerzeuger	0	9999999999999
190	009228	de: Dichtung Brennkammer (240x154x3mm KP1250) HMX	0	9999999999999
200	070748	de: Distanzplatte hinten links für FAX,HMX	0	9999999999999
210	040625	de: Einhängeblech hinten links HMX320/400 bis Los30	0	9999999999999
210	043305	de: Einhängeblech hinten links oben für HMX320/400 ab Los31	0	9999999999999
215	041739	de: Einhängeblech unten für HMX ab Los31	0	9999999999999
220	040626	de: Einhängeblech links für HMX320 bis Los30	0	9999999999999
220	043306	de: Einhängeblech links oben für HMX320/400 ab Los31	0	9999999999999
223	041739	de: Einhängeblech unten für HMX ab Los31	0	9999999999999
224	040626	de: Einhängeblech links für HMX320 bis Los30	0	9999999999999
224	043306	de: Einhängeblech links oben für HMX320/400 ab Los31	0	9999999999999
227	041268	de: Einhängeblech oben HMX210-400	0	9999999999999
230	040628	de: Einhängeblech rechts und hinten rechts HMX320/400 bis Los30	0	9999999999999
230	043304	de: Einhängeblech rechts ob.u.hinten rechts ob.HMX320/400 ab Los31	0	9999999999999
233	041739	de: Einhängeblech unten für HMX ab Los31	0	9999999999999
240	040028	de: Flansch Brennkammer HMX320/400	0	9999999999999
242	009246	de: Isolierung Brennkammertür innen HMX (380x218x20mm) KVS 121-LO	0	9999999999999
250	003617	de: O-Ringdichtung 64x3 NBR 70, schwarz Flansch Brennkammertür HMX	0	9999999999999
260	019415	Wing nut DIN 315 - M8 - brass for FAX, FireWIN, VarioWIN, BioWIN 10, EasyWIN Premium 180	0	9999999999999
270	006837	BDM plate HMX/PMX	0	9999999999999
270	068991	de: Front für Schalterblende für HMX Ersatz: 042301	0	9999999999999
275	007645	de: Funk-Entstörfilter F 34-206/010 6,3A A.Nr: 706106 HMX	0	9999999999999
280	040394	de: Gebläse mit Gebläsedeckel komplett HMX	0	9999999999999
290	080979	de: Gebläsedeckel für HMX (ohne Motor)	0	9999999999999
295	033088	de: Gewindestifte M10x30 DIN 551 blank	0	9999999999999
300	000307	de: Glasscheibe BOROFLOAT Ø 45/4 mm) GWX,FAX,GKW,HMX	0	9999999999999
310	081703	de: Griff für Aschetür für HMX	0	9999999999999
315	040309	de: Griff Heizflächenreinigung HMX	0	9999999999999

Item no.	Article no.	Description	Serialnumber from	Serialnumber
320	081737	de: Griff für Heiztür für HMX	0	9999999999999
330	063673	de: Griff für Reinigungsbürste für OKE/S 17-30,E/SKX 17-27, ETX/SNX,HMX,JetWin	0	9999999999999
340	009544	de: Griffmulde HMX,PMX,OKB,GSX	0	9999999999999
350	001438	Semicircular ring for corrugated tube 3/4“ for FireWIN, NBE, HMX, VarioWIN	0	9999999999999
355	040310	de: Hebearm Heizflächenreinigung HMX320/400 (Los 1+2)	0	9999999999999
355	040981	de: Hebearm Heizflächenreinigung HMX ab Los 3/98	0	9999999999999
360	040393	de: Heiztür HMX	0	9999999999999
362	040118	de: Heiztür Innenverkleidung unten HMX 320/400	0	9999999999999
362	040155	de: Hilfsplatine MES-Modul bis Los 12	0	9999999999999
365	025968	Cap nut M6	0	9999999999999
370	025967	Cap nut DIN 1587 - M8 - 6 - galvanised for FAX, FireWIN, VarioWIN, BioWIN 10-26, EasyWIN Klassik/Premium 180	0	9999999999999
380	020117	Cylinder-head screw, hexagon socket ISO 4762 - M12x25 - 8.8 - galva. (DIN 912) for VarioWIN, FireWIN, BioWIN10-26, LogWIN Premium	0	9999999999999
390	061028	de: Isolierblech für Ascheraum links für FAX,HMX	0	9999999999999
400	061010	de: Isolierblech für Ascheraum rechts für FAX,HMX	0	9999999999999
410	013884	de: Isolierblech für Kessel für HMX320/400 HMXErsatz Nr.069410	0	9999999999999
420	068777	de: Isolierblech für Wärmeerzeuger für HMX	0	9999999999999
424	009246	de: Isolierung Brennkammertür innen HMX (380x218x20mm) KVS 121-LO	0	9999999999999
425	009510	de: Isolierplatte AT HMX	0	9999999999999
426	009511	de: Isolierplatte (472x318x6) Heiztür HMX	0	9999999999999
430	007022	de: Isolierstein Brennkammer oben hinten und vorne HMX (215x78x25)	0	9999999999999
440	007212	de: Isolierstein Brennkammer hi.(1Stk.) FAX,HMX210-320 ab 08/01 50x168x156 (4Stk.pro Gerät nötig)	0	9999999999999
450	009420	de: Isoliersteinset Brennkammer oben HMX320 (540x159x50, 1xD124)	0	9999999999999
455	009615	de: Isolierstein Brennkammer oben hinten HMX210-320 (370x159x50)	0	9999999999999
460	007030	Insulating brick for cumbustion chamber top left for HMX(540x53x50)	0	9999999999999
465	009423	de: Isolierstein Brennkammer oben vorne HMX320 (170x159x50, 1x D124)	0	9999999999999
470	007048	de: Isolierstein Brennkammer unten HMX (694x213x25)	0	9999999999999
480	009241	Insulation for filling chamber rear for HMX	0	9999999999999
490	009217	Insulating brick for filling space bottom for HMX	0	9999999999999
500	009236	Insulation for filling chamber right for HMX	0	9999999999999
510	009281	Insulating brick for cumbustion chamber for HMX (KF128/1260 700x156x25)	0	9999999999999
520	007840	Insulation for rear of combustion chamber FAX,HMX210-320 FAX978 (165x153x50) RPV	0	9999999999999
523	007733	de: Isolierung 683x200x20mm RAF Isolierblech Ascheraum FAX,HMX	0	9999999999999
525	009360	de: Kabel Gebläsemotor HMX/PMX	0	9999999999999
526	040162	de: Kabel (7x1mm² - Silikon) Synchronmotor HMX,SWK	0	9999999999999
527	040159	de: Kabel (4x1mm² - Silikon) Synchronmotor-Endschalter HMX,SWK	0	9999999999999
528	040169	de: Kabeldurchführung mit Kabelbaum kpl. HMX	0	9999999999999
529	004385	KFE cock	0	9999999999999
530	040632	de: Klappe Schwelgasabsaugung HMX	0	9999999999999
540	016152	ZH 094 Klingerit seal 1/2" (30x21x2mm) for AccuWIN, AccuWIN Solar, VarioWIN, FireWIN	0	9999999999999
550	070574	de: Leiste-Trennblech für FAX,HMX (560x65x3)	0	9999999999999
560	043441	Blower wheel Ø170mm for HMX, SilvaWIN, LogWIN Premium 180-505	0	9999999999999
570	040032	Air choke	0	9999999999999
573	001759	Magnetic lock No. 246.41 for GKW,NBE,GKX,GWX,GTX,PMX,HMX,FireWIN,VarioWIN, BioWIN 10-26	0	9999999999999
575	007304	Magnet, complete, glued for motor for PMX, HMX from lot 24, BioWIN 10-26	0	9999999999999
580	009540	Spatula	0	9999999999999
590	005141	Microswitch Z-15GW4-B for heating door for FAX,HMX,PMX, SilvaWIN, FireWIN	0	9999999999999
590	005159	Cover APB-PG (PHM)	0	9999999999999
600	009277	Air control microswitch	0	9999999999999
602	031155	de: Mutter DIN 934 - M10 - A4	0	9999999999999
605	041429	de: Platine MES Module m.Litzen gelötet PMX,HMX	0	9999999999999
610	042967	Blower motor for HMX, FireWIN, VarioWIN	0	9999999999999

Item no.	Article no.	Description	Serialnumber from	Serialnumber
612	007330	Condenser for motor MAB 500V, 3µF for HMX,PMX,SWK,BioWIN10-26,FireWIN,VarioWIN,BioWIN XL 35-60, EasyWIN Premium 180,LogWIN Premiu	0	9999999999999
613	051645	Power supply unit 12V	0	9999999999999
614	006804	de: Platine Bedienmodul inkl.Flachbandkabel PMX,HMX ab Los13/00	0	9999999999999
614	009304	de: Platine Bedienmodul HMX bis Los12	0	9999999999999
615	009303	de: Platine FMF HMX ab Los13/00	0	9999999999999
615	042707	de: Umbaupaket FMF HMX bis Los 12 (inkl.Platine,Schaltfeld,etc.)	0	9999999999999
615	042707	de: Umbaupaket FMF HMX bis Los 12 (inkl.Platine,Schaltfeld,etc.)	0	9999999999999
616	040163	de: Grundplatine HMX bis Los12	0	9999999999999
620	009283	de: Puffer (SM 20292 a B d25/h15 M6 65° Shore) Motor HMX,PMX	0	9999999999999
625	006820	MES007 Immersion sensor (exhaust gas sensor) Pt 1000 for PMX, FireWIN, VarioWIN, BioWIN 10-26, BioWIN XL 35-60	0	9999999999999
630	040629	de: Rauchgasumlenkung HMX320/400 (keine HFR-bis Los7)	0	9999999999999
635	041271	de: Rauchgasumlenkung Heizflächenreinigung HMX320/400K	0	9999999999999
640	012009	de: Reinigungsbürste W.Nr.1.4301 (147x90x70/50mm), schraubbar (M6-IG)	0	9999999999999
650	040508	de: Reinigungsdeckel HMX320/400	0	9999999999999
660	040328	Cleaning rake for HMX,PMX, EasyWIN Klassik/Premium 180, LogWIN Premium 180-505	0	9999999999999
670	040022	de: Reinigungsschaber FAX,HMX verzinkt	0	9999999999999
675	009221	de: Rohrsteckschlüssel SW17 verz. mit Drehstift HMX	0	9999999999999
680	007452	de: Rost (557x367mm) HMX400 und HMX320 ab Los31	0	9999999999999
680	009419	de: Rost (557x365mm) HMX320 bis Los30	0	9999999999999
690	040513	de: Rückwand HMX320/400	0	9999999999999
694	040314	de: Rüttelarm Heizflächenreinigung HMX320/400 (Los 1+2)	0	9999999999999
694	040979	de: Rüttelarm Heizflächenreinigung HMX ab Los3/98	0	9999999999999
697	040315	de: Rüttelstange Heizflächenreinigung HMX,PMX	0	9999999999999
698	042301	de: Schalterblende mit Anschlußkasten für HMX	0	9999999999999
699	042296	de: HMX010 HMX Schalterblende Grundvariante im Karton	0	9999999999999
700	042754	de: Schalterblende Unterteil rot HMX ab Los13 HMX	0	9999999999999
700	068983	de: Schalterblende Unterteil für HMX bis Los12	0	9999999999999
710	067034	de: Abgasschikane für HMX320/400	0	9999999999999
720	007220	de: Gleitfett 40gr MICROLUBE GL261 (Tube)	0	9999999999999
725	019836	Cylinder screw 2.9x16 (not illustrated)	0	9999999999999
730	009219	Screw door handle bearing M12 (WAF17/30) - galvanised for HMX, BioWIN10-26, FireWIN, VarioWIN, EasyWIN Klassik/Premium 180	0	9999999999999
740	081761	de: Schutzrohr für Fühler für HMX,PMX	0	9999999999999
745	081406	de: Schutzrohr für Fühler	0	9999999999999
746	041498	Protective tube for exhaust gas sensor	0	9999999999999
750	040216	de: Schutztasse HMX210-320	0	9999999999999
760	044467	de: Schwelgasabdeckung mit Isolierung für HMX	0	9999999999999
770	040512	de: Seitenwand links rot HMX320/400	0	9999999999999
780	042608	de: Seitenwand rechts rot HMX320/400	0	9999999999999
790	042271	de: Sekundärluftrost für HMX 210-400 HMX940	0	9999999999999
795	006900	Fuse 1 A T 5x20 ceramic tube	0	9999999999999
796	003228	6.3A fuse (not illustrated)	0	9999999999999
800	040220	de: Sicherungsbügel HMX	0	9999999999999
801	003663	Fuse holder	0	9999999999999
803	043268	de: Sicherungswinkel Mitte f.Stein HMX260-400 (Transportsch.)ab Los31	0	9999999999999
805	046056	de: U-Profildichtung Silikon 6x7,5x1300mm PMX,HMX	0	9999999999999
810	007436	de: Stehrost 3-369-007436 HMX	0	9999999999999
820	008004	Brick for filling chamber rear for HMX	0	9999999999999
830	008038	de: Stein Füllraum links HMX400 ab Los1 und HMX320 ab Los31 (152x195x80mm)	0	9999999999999
830	009280	Brick for filling chamber left for HMX320 from lot 30 (152x195x110mm)	0	9999999999999
840	008020	Brick for the hand side of the filling chamber for HMX	0	9999999999999
850	008012	Brick for filling chamber front for HMX	0	9999999999999

Item no.	Article no.	Description	Serialnumber from	Serialnumber t
854	009994	Foot M12X40 JTB38 for HMX, EasyWIN Klassik/Premium 180, LogWIN Premium 180-505	0	9999999999999
855	040429	Servomotor for HMX, SilvaWIN, LogWIN Premium 180-505	0	9999999999999
860	080664	FAX192 Poker for FAX,HMX,SilvaWIN,FKX,EasyWIN Klassik/Premium 180,LogWIN Premium 180-505	0	9999999999999
870	040034	de: Strahlschutzblech Brennkammer HMX	0	9999999999999
880	040291	de: Strahlschutzblech Gebläse HMX, SilvaWIN	0	9999999999999
890	502186	MES009M Immersion sensor	0	9999999999999
900	042028	Immersion sleeve 1/2“ 180x16 mm for ETX/SNX, KSL032,NBS,NBL,FAX,ASL,FKV,KSL,ZHN,HMX,JetWin, BioWIN XL 35-60	0	9999999999999
910	007626	Thermocouple	0	9999999999999
920	046451	Safety thermostat LS1+100/-6, Auger for FireWIN, BioWIN 10-26, BioWIN XL 35-60	0	9999999999999
930	061961	de: Tragbügel für Aschelade für FAX,HMX	0	9999999999999
932	068628	de: Türlager oben grau besch.für HMX	0	9999999999999
934	068636	de: Türlager unten für HMX (auf SW.links)	0	9999999999999
940	040511	de: Türverkleidung links rot HMX320/400	0	9999999999999
950	040510	de: Türverkleidung rechts oben rot HMX320/400	0	9999999999999
960	042611	de: Türverkleidung rechts unten rot HMX	0	9999999999999
970	000566	NBE964 Union nut 1/2” black no. 374 for NBE, HMX, FireWIN	0	9999999999999
980	033090	de: Sechskant-Verlängerungsmutter 3d M10 - St - verzinkt (DIN 6334)	0	9999999999999
985	003263	de: Verschlußstopfen schwarz GPN 300 F14 KSN,ZHN,PMX	0	9999999999999
990	040631	de: Vorstelltürblech HMX	0	9999999999999
995	040925	Wago terminal block 8-pin blue/grey (230 V) pre-assembled for BioWIN 10-26, BioWIN XL 35-60 (*not illustrated)	0	9999999999999
996	040926	Wago terminal block 11-pin orange (extra-low voltage) pre-assembled for BioWIN 10-26, BioWIN XL 35-60	0	9999999999999
997	044151	de: Wärmedämmung unten HMX	0	9999999999999
1000	040507	de: Edelstahlwellrohr mit Überwurfm.,Halbringe u.Dichtungen HMX	0	9999999999999
1010	006298	Flexible stainless steel tube 3/4"x150mm	0	9999999999999
1020	009542	Cable feed-through	0	9999999999999
1021	001884	Strain relief USR 400 for 3-way changeover unit	0	9999999999999
10000	044947	de: Dichtungsset (Dichtschnur) Aschetür Glasfaserpackg. Ref.023 Silikon HMX	0	9999999999999
10020	044948	de: Dichtungsset (Dichtschnur) Heiztür Glasfaserpackg. Ref.023 Silikon HMX	0	9999999999999
10030	044949	Seal for deflector flap	0	9999999999999

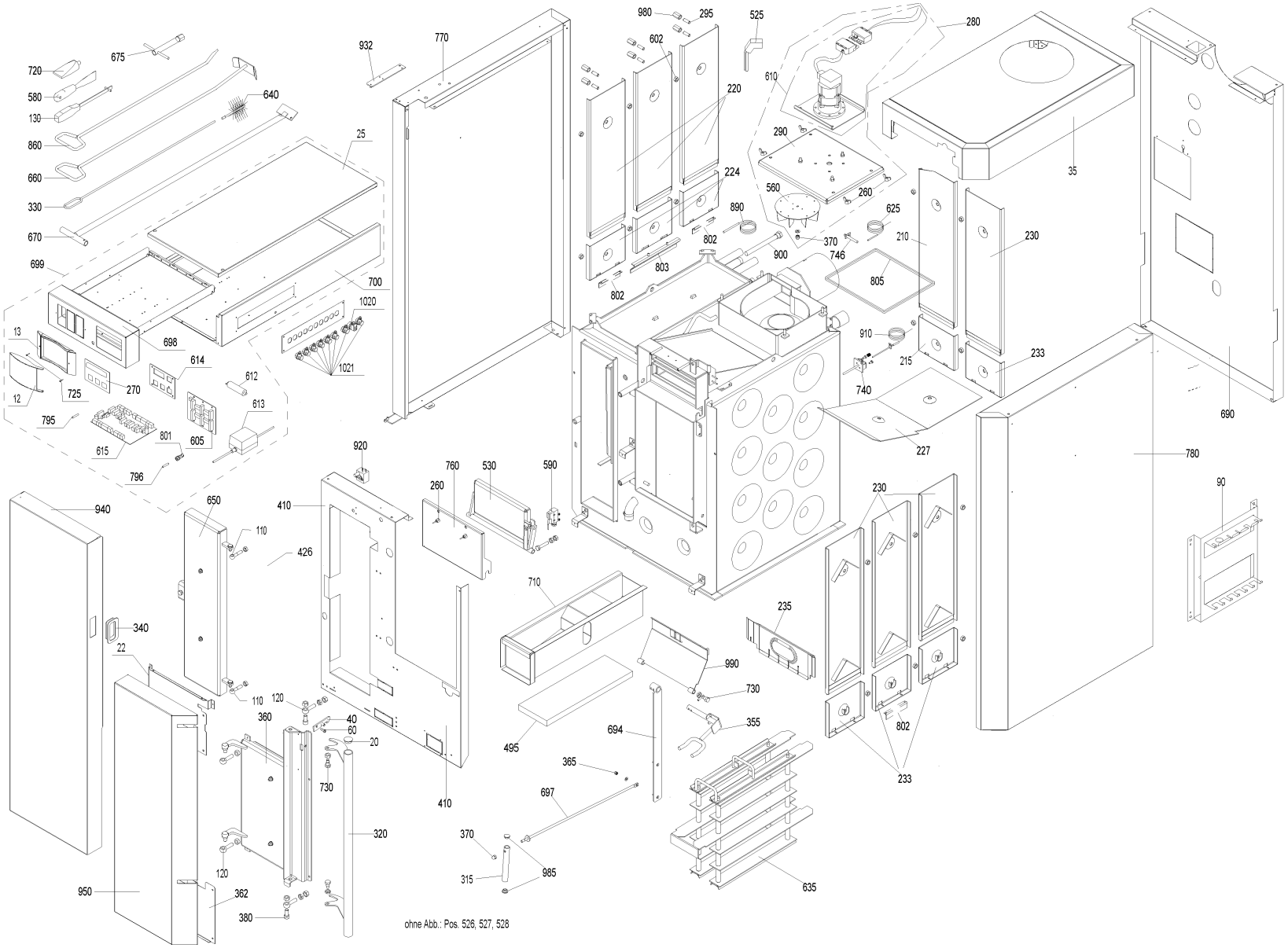
720
580
130
860
660
330
670
675
640
25
699
700
1020
1021
13
12
725
270
698
614
612
613
795
615
801
605
796
932
770
980
295
602
525
280
220
610
290
224
560
260
35
890
625
210
230
802
370
746
900
803
805
802
910
215
233
740
227
690
780
90
920
760
530
590
260
410
650
110
426
940
340
22
110
120
360
40
60
20
730
410
710
235
990
730
355
694
495
365
697
320
370
315
985
635
120
362
950
380
230
802
233
ohne Abb.: Pos. 526, 527, 528

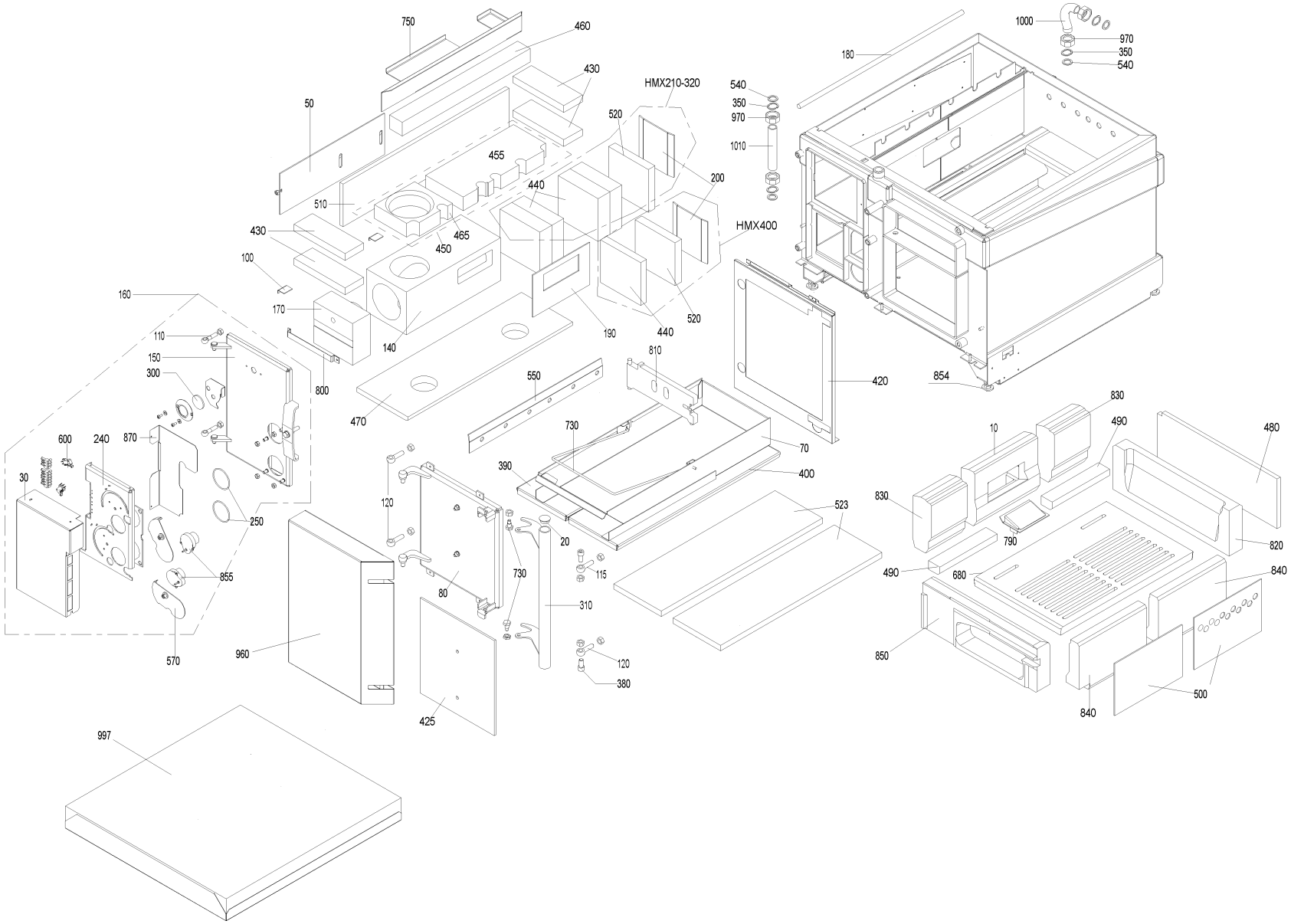
750
460
430
50
HMX210-320
520
455
440
200
510
430
465
450
HMX400
100
160
170
190
440
520
110
140
150
300
800
470
550
810
420
854
1000
970
350
540
180
540
350
970
1010
830
490
480
10
600
240
870
730
70
30
390
400
120
523
830
250
20
790
820
855
730
115
490
680
840
80
310
570
960
120
380
850
500
840
425
997

Item no.	Article no.	Description	Serialnumber from	Serialnumber t
10	009214	Burn-up stone for HMX320/400	0	9999999999999
12	009448	Cover MES	0	9999999999999
13	009446	Housing cover MES	0	9999999999999
20	004995	Cover for HMX, PMX, VestoWIN Premium 200-202, VestoWIN Klassik 170-220	0	9999999999999
22	040550	de: Abdeckung Heiztür HMX innen oben	0	9999999999999
25	042628	de: Abdeckung Schaltkasten HMX	0	9999999999999
30	040025	de: Abdeckung Stellmotor HMX	0	9999999999999
35	040515	de: Abdeckung oben HMX	0	9999999999999
40	081638	de: Anlüftsicherung für HMX	0	9999999999999
50	081878	Pressure plate for cumbustion chamber HMX	0	9999999999999
60	015636	de: Ansatzschraube M6x21,5 VZ HMX 4-369-015636 (5-3-135)	0	9999999999999
70	040005	de: Aschelade HMX	0	9999999999999
80	040392	de: Aschetür HMX	0	9999999999999
90	040438	de: Aufhängeleiste Reinigungsgeräte HMX,PMX	0	9999999999999
100	040218	de: Auflage Anpreßplatte HMX	0	9999999999999
110	033432	Eyebolt similar to DIN 444 - B M10x50 - 4.6 - bright for VarioWIN, FireWIN, VestoWIN Premium 200-202, VestoWIN Klassik 170-220	0	9999999999999
115	040124	de: Augenschraube M12x40 HMX	0	9999999999999
120	033433	Eyebolt similar to DIN 444 - B M12x50 - 4.6 - bright for VarioWIN, FireWIN,EasyWIN Klassik/Premium 180,LogWIN Premium 180-505	0	9999999999999
130	073407	Operating handle for FKV,KSL,ZHL,FKN,FAX,ZHN,KSN,FKH,HMX,VestoWIN Premium 200-202, VestoWIN Klassik 170-220	0	9999999999999
140	045855	de: Brennkammer (Leichtbeton) HMX40	0	9999999999999
150	068511	de: Brennkammertür für HMX	0	9999999999999
160	040380	de: Brennkammertür kpl. montiert HMX 320/400	0	9999999999999
170	009417	cover of combustion chamber HMX	0	9999999999999
180	040228	de: Dichtung (Ø14x0,69m/LSR) HMX Trennblech/Wärmeerzeuger	0	9999999999999
190	009228	de: Dichtung Brennkammer (240x154x3mm KP1250) HMX	0	9999999999999
200	070748	de: Distanzplatte hinten links für FAX,HMX	0	9999999999999
210	040625	de: Einhängeblech hinten links HMX320/400 bis Los30	0	9999999999999
210	043305	de: Einhängeblech hinten links oben für HMX320/400 ab Los31	0	9999999999999
215	041739	de: Einhängeblech unten für HMX ab Los31	0	9999999999999
220	040627	de: Einhängeblech links HMX400 bis Los30	0	9999999999999
220	043306	de: Einhängeblech links oben für HMX320/400 ab Los31	0	9999999999999
223	041739	de: Einhängeblech unten für HMX ab Los31	0	9999999999999
224	040627	de: Einhängeblech links HMX400 bis Los30	0	9999999999999
224	043306	de: Einhängeblech links oben für HMX320/400 ab Los31	0	9999999999999
227	041268	de: Einhängeblech oben HMX210-400	0	9999999999999
230	040628	de: Einhängeblech rechts und hinten rechts HMX320/400 bis Los30	0	9999999999999
230	043304	de: Einhängeblech rechts ob.u.hinten rechts ob.HMX320/400 ab Los31	0	9999999999999
233	041739	de: Einhängeblech unten für HMX ab Los31	0	9999999999999
240	040028	de: Flansch Brennkammer HMX320/400	0	9999999999999
242	009246	de: Isolierung Brennkammertür innen HMX (380x218x20mm) KVS 121-LO	0	9999999999999
250	003617	de: O-Ringdichtung 64x3 NBR 70, schwarz Flansch Brennkammertür HMX	0	9999999999999
260	019415	Wing nut DIN 315 - M8 - brass for FAX, FireWIN, VarioWIN, BioWIN 10, EasyWIN Premium 180	0	9999999999999
270	006837	BDM plate HMX/PMX	0	9999999999999
270	068991	de: Front für Schalterblende für HMX Ersatz: 042301	0	9999999999999
275	007645	de: Funk-Entstörfilter F 34-206/010 6,3A A.Nr: 706106 HMX	0	9999999999999
280	040394	de: Gebläse mit Gebläsedeckel komplett HMX	0	9999999999999
290	080979	de: Gebläsedeckel für HMX (ohne Motor)	0	9999999999999
295	033088	de: Gewindestifte M10x30 DIN 551 blank	0	9999999999999
300	000307	de: Glasscheibe BOROFLOAT Ø 45/4 mm) GWX,FAX,GKW,HMX	0	9999999999999
310	081703	de: Griff für Aschetür für HMX	0	9999999999999
315	040309	de: Griff Heizflächenreinigung HMX	0	9999999999999

Item no.	Article no.	Description	Serialnumber from	Serialnumber t
320	081737	de: Griff für Heiztür für HMX	0	9999999999999
330	063673	de: Griff für Reinigungsbürste für OKE/S 17-30,E/SKX 17-27, ETX/SNX,HMX,JetWin	0	9999999999999
340	009544	de: Griffmulde HMX,PMX,OKB,GSX	0	9999999999999
350	001438	Semicircular ring for corrugated tube 3/4“ for FireWIN, NBE, HMX, VarioWIN	0	9999999999999
355	040310	de: Hebearm Heizflächenreinigung HMX320/400 (Los 1+2)	0	9999999999999
355	040981	de: Hebearm Heizflächenreinigung HMX ab Los 3/98	0	9999999999999
360	040393	de: Heiztür HMX	0	9999999999999
362	040118	de: Heiztür Innenverkleidung unten HMX 320/400	0	9999999999999
362	040155	de: Hilfsplatine MES-Modul bis Los 12	0	9999999999999
365	025968	Cap nut M6	0	9999999999999
370	025967	Cap nut DIN 1587 - M8 - 6 - galvanised for FAX, FireWIN, VarioWIN, BioWIN 10-26, EasyWIN Klassik/Premium 180	0	9999999999999
380	020117	Cylinder-head screw, hexagon socket ISO 4762 - M12x25 - 8.8 - galva. (DIN 912) for VarioWIN, FireWIN, BioWIN10-26, LogWIN Premium	0	9999999999999
390	061028	de: Isolierblech für Ascheraum links für FAX,HMX	0	9999999999999
400	061010	de: Isolierblech für Ascheraum rechts für FAX,HMX	0	9999999999999
410	013884	de: Isolierblech für Kessel für HMX320/400 HMXErsatz Nr.069410	0	9999999999999
420	068777	de: Isolierblech für Wärmeerzeuger für HMX	0	9999999999999
424	009246	de: Isolierung Brennkammertür innen HMX (380x218x20mm) KVS 121-LO	0	9999999999999
425	009510	de: Isolierplatte AT HMX	0	9999999999999
426	009511	de: Isolierplatte (472x318x6) Heiztür HMX	0	9999999999999
430	007022	de: Isolierstein Brennkammer oben hinten und vorne HMX (215x78x25)	0	9999999999999
440	008153	de: Isolierstein Brennkammer hinten HMX400 (168x156x25)	0	9999999999999
450	007014	de: Isolierstein Brennkammer oben HMX400 (540x159x50, 2xD124)	0	9999999999999
460	007030	Insulating brick for cumbustion chamber top left for HMX(540x53x50)	0	9999999999999
470	007048	de: Isolierstein Brennkammer unten HMX (694x213x25)	0	9999999999999
480	009241	Insulation for filling chamber rear for HMX	0	9999999999999
490	009217	Insulating brick for filling space bottom for HMX	0	9999999999999
500	009236	Insulation for filling chamber right for HMX	0	9999999999999
510	009281	Insulating brick for cumbustion chamber for HMX (KF128/1260 700x156x25)	0	9999999999999
520	009243	de: Isolierung Brennkammer hinten HMX400 (168x156x50 KF96/1260)	0	9999999999999
523	007733	de: Isolierung 683x200x20mm RAF Isolierblech Ascheraum FAX,HMX	0	9999999999999
525	009360	de: Kabel Gebläsemotor HMX/PMX	0	9999999999999
526	040162	de: Kabel (7x1mm² - Silikon) Synchronmotor HMX,SWK	0	9999999999999
527	040159	de: Kabel (4x1mm² - Silikon) Synchronmotor-Endschalter HMX,SWK	0	9999999999999
528	040169	de: Kabeldurchführung mit Kabelbaum kpl. HMX	0	9999999999999
529	004385	KFE cock	0	9999999999999
530	040632	de: Klappe Schwelgasabsaugung HMX	0	9999999999999
540	016152	ZH 094 Klingerit seal 1/2" (30x21x2mm) for AccuWIN, AccuWIN Solar, VarioWIN, FireWIN	0	9999999999999
550	070574	de: Leiste-Trennblech für FAX,HMX (560x65x3)	0	9999999999999
560	043441	Blower wheel Ø170mm for HMX, SilvaWIN, LogWIN Premium 180-505	0	9999999999999
570	040032	Air choke	0	9999999999999
573	001759	Magnetic lock No. 246.41 for GKW,NBE,GKX,GWX,GTX,PMX,HMX,FireWIN,VarioWIN, BioWIN 10-26	0	9999999999999
575	007304	Magnet, complete, glued for motor for PMX, HMX from lot 24, BioWIN 10-26	0	9999999999999
580	009540	Spatula	0	9999999999999
590	005141	Microswitch Z-15GW4-B for heating door for FAX,HMX,PMX, SilvaWIN, FireWIN	0	9999999999999
590	005159	Cover APB-PG (PHM)	0	9999999999999
600	009277	Air control microswitch	0	9999999999999
602	031155	de: Mutter DIN 934 - M10 - A4	0	9999999999999
605	041429	de: Platine MES Module m.Litzen gelötet PMX,HMX	0	9999999999999
610	042967	Blower motor for HMX, FireWIN, VarioWIN	0	9999999999999
612	007330	Condenser for motor MAB 500V, 3µF for HMX,PMX,SWK,BioWIN10-26,FireWIN,VarioWIN,BioWIN XL 35-60, EasyWIN Premium 180,LogWIN Premiu	0	9999999999999
613	051645	Power supply unit 12V	0	9999999999999

Item no.	Article no.	Description	Serialnumber from	Serialnumber t
614	006804	de: Platine Bedienmodul inkl.Flachbandkabel PMX,HMX ab Los13/00	0	9999999999999
614	009304	de: Platine Bedienmodul HMX bis Los12	0	9999999999999
615	009303	de: Platine FMF HMX ab Los13/00	0	9999999999999
615	042707	de: Umbaupaket FMF HMX bis Los 12 (inkl.Platine,Schaltfeld,etc.)	0	9999999999999
615	042707	de: Umbaupaket FMF HMX bis Los 12 (inkl.Platine,Schaltfeld,etc.)	0	9999999999999
616	040163	de: Grundplatine HMX bis Los12	0	9999999999999
620	009283	de: Puffer (SM 20292 a B d25/h15 M6 65° Shore) Motor HMX,PMX	0	9999999999999
625	006820	MES007 Immersion sensor (exhaust gas sensor) Pt 1000 for PMX, FireWIN, VarioWIN, BioWIN 10-26, BioWIN XL 35-60	0	9999999999999
630	040629	de: Rauchgasumlenkung HMX320/400 (keine HFR-bis Los7)	0	9999999999999
635	041271	de: Rauchgasumlenkung Heizflächenreinigung HMX320/400K	0	9999999999999
640	012009	de: Reinigungsbürste W.Nr.1.4301 (147x90x70/50mm), schraubbar (M6-IG)	0	9999999999999
660	040328	Cleaning rake for HMX,PMX, EasyWIN Klassik/Premium 180, LogWIN Premium 180-505	0	9999999999999
670	040022	de: Reinigungsschaber FAX,HMX verzinkt	0	9999999999999
675	009221	de: Rohrsteckschlüssel SW17 verz. mit Drehstift HMX	0	9999999999999
680	007452	de: Rost (557x367mm) HMX400 und HMX320 ab Los31	0	9999999999999
690	040513	de: Rückwand HMX320/400	0	9999999999999
694	040314	de: Rüttelarm Heizflächenreinigung HMX320/400 (Los 1+2)	0	9999999999999
694	040979	de: Rüttelarm Heizflächenreinigung HMX ab Los3/98	0	9999999999999
697	040315	de: Rüttelstange Heizflächenreinigung HMX,PMX	0	9999999999999
698	042301	de: Schalterblende mit Anschlußkasten für HMX	0	9999999999999
699	042296	de: HMX010 HMX Schalterblende Grundvariante im Karton	0	9999999999999
700	042754	de: Schalterblende Unterteil rot HMX ab Los13 HMX	0	9999999999999
700	068983	de: Schalterblende Unterteil für HMX bis Los12	0	9999999999999
710	067034	de: Abgasschikane für HMX320/400	0	9999999999999
720	007220	de: Gleitfett 40gr MICROLUBE GL261 (Tube)	0	9999999999999
725	019836	Cylinder screw 2.9x16 (not illustrated)	0	9999999999999
730	009219	Screw door handle bearing M12 (WAF17/30) - galvanised for HMX, BioWIN10-26, FireWIN, VarioWIN, EasyWIN Klassik/Premium 180	0	9999999999999
740	081761	de: Schutzrohr für Fühler für HMX,PMX	0	9999999999999
745	081406	de: Schutzrohr für Fühler	0	9999999999999
746	041498	Protective tube for exhaust gas sensor	0	9999999999999
750	081919	de: Schutztasse für HMX400	0	9999999999999
760	044467	de: Schwelgasabdeckung mit Isolierung für HMX	0	9999999999999
770	040512	de: Seitenwand links rot HMX320/400	0	9999999999999
780	042608	de: Seitenwand rechts rot HMX320/400	0	9999999999999
790	042271	de: Sekundärluftrost für HMX 210-400 HMX940	0	9999999999999
795	006900	Fuse 1 A T 5x20 ceramic tube	0	9999999999999
796	003228	6.3A fuse (not illustrated)	0	9999999999999
800	040220	de: Sicherungsbügel HMX	0	9999999999999
801	003663	Fuse holder	0	9999999999999
803	043268	de: Sicherungswinkel Mitte f.Stein HMX260-400 (Transportsch.)ab Los31	0	9999999999999
805	046056	de: U-Profildichtung Silikon 6x7,5x1300mm PMX,HMX	0	9999999999999
810	007436	de: Stehrost 3-369-007436 HMX	0	9999999999999
820	008004	Brick for filling chamber rear for HMX	0	9999999999999
830	008038	de: Stein Füllraum links HMX400 ab Los1 und HMX320 ab Los31 (152x195x80mm)	0	9999999999999
840	008020	Brick for the hand side of the filling chamber for HMX	0	9999999999999
850	008012	Brick for filling chamber front for HMX	0	9999999999999
854	009994	Foot M12X40 JTB38 for HMX, EasyWIN Klassik/Premium 180, LogWIN Premium 180-505	0	9999999999999
855	040429	Servomotor for HMX, SilvaWIN, LogWIN Premium 180-505	0	9999999999999
860	080664	FAX192 Poker for FAX,HMX,SilvaWIN,FKX,EasyWIN Klassik/Premium 180,LogWIN Premium 180-505	0	9999999999999
870	040034	de: Strahlschutzblech Brennkammer HMX	0	9999999999999
880	040291	de: Strahlschutzblech Gebläse HMX, SilvaWIN	0	9999999999999

Item no.	Article no.	Description	Serialnumber from	Serialnumber
890	502186	MES009M Immersion sensor	0	9999999999999
900	042028	Immersion sleeve 1/2“ 180x16 mm for ETX/SNX, KSL032,NBS,NBL,FAX,ASL,FKV,KSL,ZHN,HMX,JetWin, BioWIN XL 35-60	0	9999999999999
910	007626	Thermocouple	0	9999999999999
920	046451	Safety thermostat LS1+100/-6, Auger for FireWIN, BioWIN 10-26, BioWIN XL 35-60	0	9999999999999
930	061961	de: Tragbügel für Aschelade für FAX,HMX	0	9999999999999
932	068628	de: Türlager oben grau besch.für HMX	0	9999999999999
934	068636	de: Türlager unten für HMX (auf SW.links)	0	9999999999999
940	040511	de: Türverkleidung links rot HMX320/400	0	9999999999999
950	040510	de: Türverkleidung rechts oben rot HMX320/400	0	9999999999999
960	042611	de: Türverkleidung rechts unten rot HMX	0	9999999999999
970	000566	NBE964 Union nut 1/2” black no. 374 for NBE, HMX, FireWIN	0	9999999999999
985	003263	de: Verschlußstopfen schwarz GPN 300 F14 KSN,ZHN,PMX	0	9999999999999
990	040631	de: Vorstelltürblech HMX	0	9999999999999
995	040925	Wago terminal block 8-pin blue/grey (230 V) pre-assembled for BioWIN 10-26, BioWIN XL 35-60 (*not illustrated)	0	9999999999999
996	040926	Wago terminal block 11-pin orange (extra-low voltage) pre-assembled for BioWIN 10-26, BioWIN XL 35-60	0	9999999999999
997	044151	de: Wärmedämmung unten HMX	0	9999999999999
1000	040507	de: Edelstahlwellrohr mit Überwurfm.,Halbringe u.Dichtungen HMX	0	9999999999999
1010	006298	Flexible stainless steel tube 3/4"x150mm	0	9999999999999
1020	009542	Cable feed-through	0	9999999999999
1021	001884	Strain relief USR 400 for 3-way changeover unit	0	9999999999999
10000	044947	de: Dichtungsset (Dichtschnur) Aschetür Glasfaserpackg. Ref.023 Silikon HMX	0	9999999999999
10020	044948	de: Dichtungsset (Dichtschnur) Heiztür Glasfaserpackg. Ref.023 Silikon HMX	0	9999999999999
10030	044949	Seal for deflector flap	0	9999999999999

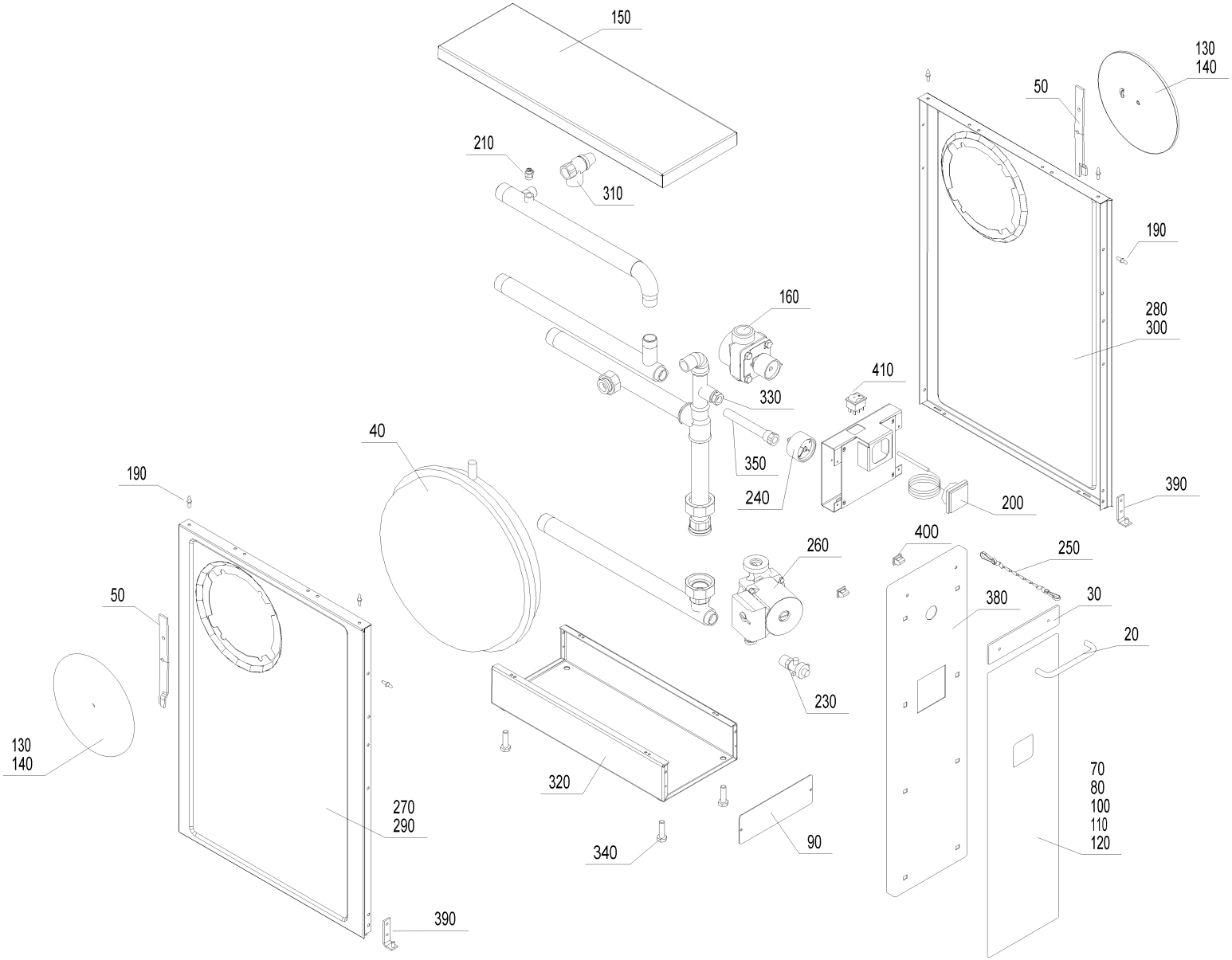
150
210
310
130
140
50
190
280
300
160
410
330
350
240
200
390
40
190
260
400
250
50
380
30
20
230
130
140
320
70
80
100
110
120
270
290
340
90
390

Item no.	Article no.	Description	Serialnumber from	Serialnumber to
10	052353	de: Abdeckblende für Sockel für ASE	0	9999999999999999
20	004340	de: Alu-Griff LA 130mm,SH 35mm BR, ZHN,KSN,ASN/E	0	9999999999999999
30	004391	de: Alu-Türgriffblende ASN/E ASN0201	0	9999999999999999
40	003611	OEX101 DGN-10l expansion tank, ½" for OE/KN,OEX,GKA,ASN/E, fittings cabinet Vesto 200	0	9999999999999999
50	080098	KSN0341 Fastening clip for dummy washer for HN,KSN,ASN/E, fittings cabinet Vesto 200	0	9999999999999999
60	065382	ASN045 Tank for electric heating for ASE, fittings cabinet Vesto 200	0	9999999999999999
70	083860	de: Blende braunbeige für ASN *ASN906Ersatz ET-Nr.503053	0	9999999999999999
80	083879	de: Blende dunkelbraun für ASN *ASN908Ersatz ET-Nr.503055	0	9999999999999999
100	083844	de: Blende perlweiß für ASN *ASN904Ersatz ET-Nr.503051	0	9999999999999999
110	083607	de: Blende rotbraun für ASN *ASN907Ersatz ET-Nr.503049	0	9999999999999999
120	083852	de: Blende saharabeige für ASN *ASN909Ersatz ET-Nr.503052	0	9999999999999999
130	082198	de: Blindscheibe braun für KSN,ASN,ZHN	0	9999999999999999
140	081221	de: Blindscheibe weiß für ASN,KSN,ZHN KSN134	0	9999999999999999
150	083127	ASN037 Cover plate (662x302x1,25mm) for ASN, fittings cabinet Vesto 200	0	9999999999999999
160	004448	ASN060 3-way mixing valve 3/4“ for ASN/E,NBR,fittings cabinet Vesto 200	0	9999999999999999
170	505087	NB-087 Electric heating insert 6.0 kW for PSX707B,ASE,fittings cabinet Vesto 200	0	9999999999999999
190	000191	KSL029 Forming screw, diameter 8x26/M5 for NBS,OEX,ASN,PMX,fittings cabinet Vesto 200, VarioWIN	0	9999999999999999
200	004049	KSN027 Thermometer Z.Nr.SK 2014 IFC 52-052 KRF for ZHN,OEX,KSN,ASN,NBE,VestoWIN Premium 200-202, VestoWIN Klassik 170-220, fitting	0	9999999999999999
210	001058	ASL001 Manually operated bleeder VFR 1/4“ for OE/KN/M,GKX,ASN,ASL,OEX, MIRA, fittings cabinet Vesto 200, VarioWIN, FireWIN	0	9999999999999999
220	012041	Knob PO 395	0	9999999999999999
230	004385	KFE cock	0	9999999999999999
240	001066	ASL002 Pressure gauge TYP101 Ø50 for OEX,OE/KN/M,GKW,ASN,ASL,GKX,GKA/E,MIRA,FireWIN,VarioWIN,fittings cabinet Vesto 200	0	9999999999999999
250	004723	OEX881 Chain for OEX,NBE,GKX,ASN, fittings room Vesto 200	0	9999999999999999
260	006422	Pump ALPHA2 25-60 130mm	0	9999999999999999
270	060713	de: Seitenwand links braun für ASN/E ASN902	0	9999999999999999
280	060712	de: Seitenwand rechts braun für ASN/E ASN901	0	9999999999999999
290	084409	de: Seitenwand links weiß für ASN/E ASN033	0	9999999999999999
300	084417	de: Seitenwand rechts weiß für ASN/E ASN034	0	9999999999999999
310	001031	ASL004 Safety valve 1/2“ 2.5 bar for GWX,OEX,OE/KN/M,ASL,GKW,GTX,ASN,GKA/E,MIRA,FireWIN,Vesto Art.Nr.:49292, VarioWIN, fittings ca	0	9999999999999999
320	083399	ASN025,VESTO200 Base für ASN/E, fittings cabinet Vesto 200	0	9999999999999999
330	010286	ASL0021 Shut-off valve 1/4“ internal for pressure gauge R1/2“ for ASL/M,ÖR,SH,OEM,OEN,GTX,ASN,OEX,MIRA,FireWIN,fittings cabinet Ve	0	9999999999999999
340	016713	ASN0251 Hexagon screw M10x35, DIN 933 for SilvaWIN, BioWIN XL 35-60, fittings cabinet Vesto 200	0	9999999999999999
350	000027	KSL332 Immersion sleeve 130 mm long for KSL/ZHL,GKA/E,fittings cabinet Vesto200, VarioWIN	0	9999999999999999
360	009083	NB-9341 Thermostat, 3-pin for ASN,NBS/L/R/K,EKL,fittings cabinet Vesto 200	0	9999999999999999
370	075310	ASN043 Thermostat box cpl. (incl. thermostat and knob) for ASE, fittings cabinet Vesto 200	0	9999999999999999
380	087157	de: Tür braun für ASN/E (inkl. Blende,Griff) ASN920	0	9999999999999999
390	083739	ASN061 Door bearing cpl. galvanised (75x16x3) for ASN/E, fittings cabinet Vesto 200	0	9999999999999999
400	000507	KSL022 Door catch GP3-78/444, No.300.223 for NBS,ASL/N,OEN/M/X,ZHL,KSL,PMX,OKN/M,OKE/S, fittings cabinet Vesto 200	0	9999999999999999
410	005638	ASL010 Rocker switch blk./gr. 0-1 82.06.11.63.65 for OKE/S,FKV,ASL/N,GKW,NBS/L,E/SKX,GWX,FAX,GKX,GMX,SilvaWIN,fittings cabinet Ve	0	9999999999999999

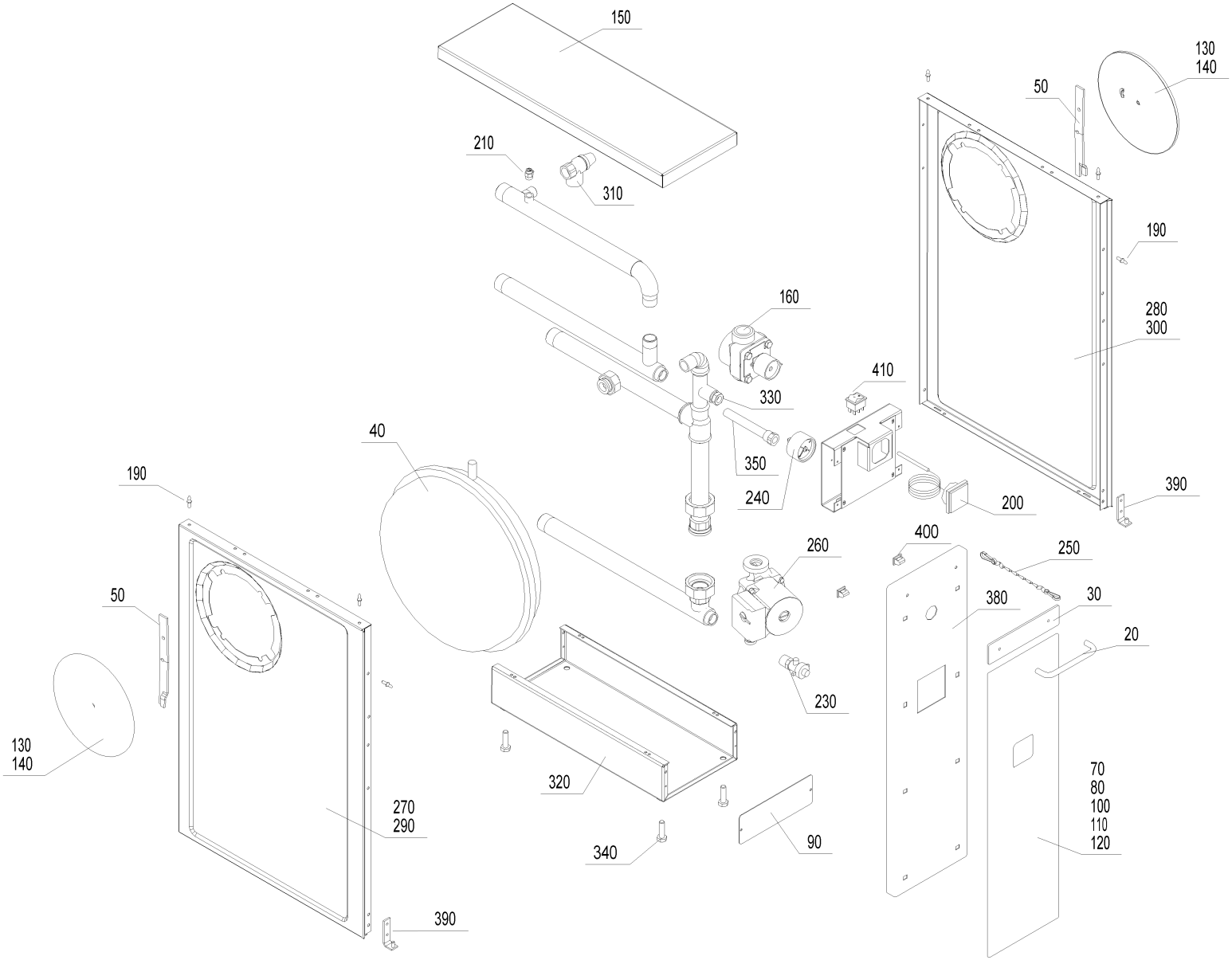
150
210
310
130
140
50
190
280
300
160
410
330
350
240
200
390
40
190
260
400
250
50
380
30
20
230
130
140
320
70
80
100
110
120
270
290
340
90
390

Item no.	Article no.	Description	Serialnumber from	Serialnumber to
10	052353	de: Abdeckblende für Sockel für ASE	0	9999999999999999
20	004340	de: Alu-Griff LA 130mm,SH 35mm BR, ZHN,KSN,ASN/E	0	9999999999999999
30	004391	de: Alu-Türgriffblende ASN/E ASN0201	0	9999999999999999
40	003611	OEX101 DGN-10l expansion tank, ½" for OE/KN,OEX,GKA,ASN/E, fittings cabinet Vesto 200	0	9999999999999999
50	080098	KSN0341 Fastening clip for dummy washer for HN,KSN,ASN/E, fittings cabinet Vesto 200	0	9999999999999999
60	065382	ASN045 Tank for electric heating for ASE, fittings cabinet Vesto 200	0	9999999999999999
70	083860	de: Blende braunbeige für ASN *ASN906Ersatz ET-Nr.503053	0	9999999999999999
80	083879	de: Blende dunkelbraun für ASN *ASN908Ersatz ET-Nr.503055	0	9999999999999999
100	083844	de: Blende perlweiß für ASN *ASN904Ersatz ET-Nr.503051	0	9999999999999999
110	083607	de: Blende rotbraun für ASN *ASN907Ersatz ET-Nr.503049	0	9999999999999999
120	083852	de: Blende saharabeige für ASN *ASN909Ersatz ET-Nr.503052	0	9999999999999999
130	082198	de: Blindscheibe braun für KSN,ASN,ZHN	0	9999999999999999
140	081221	de: Blindscheibe weiß für ASN,KSN,ZHN KSN134	0	9999999999999999
150	083127	ASN037 Cover plate (662x302x1,25mm) for ASN, fittings cabinet Vesto 200	0	9999999999999999
160	004448	ASN060 3-way mixing valve 3/4“ for ASN/E,NBR,fittings cabinet Vesto 200	0	9999999999999999
170	505087	NB-087 Electric heating insert 6.0 kW for PSX707B,ASE,fittings cabinet Vesto 200	0	9999999999999999
190	000191	KSL029 Forming screw, diameter 8x26/M5 for NBS,OEX,ASN,PMX,fittings cabinet Vesto 200, VarioWIN	0	9999999999999999
200	004049	KSN027 Thermometer Z.Nr.SK 2014 IFC 52-052 KRF for ZHN,OEX,KSN,ASN,NBE,VestoWIN Premium 200-202, VestoWIN Klassik 170-220, fitting	0	9999999999999999
210	001058	ASL001 Manually operated bleeder VFR 1/4“ for OE/KN/M,GKX,ASN,ASL,OEX, MIRA, fittings cabinet Vesto 200, VarioWIN, FireWIN	0	9999999999999999
220	012041	Knob PO 395	0	9999999999999999
230	004385	KFE cock	0	9999999999999999
240	001066	ASL002 Pressure gauge TYP101 Ø50 for OEX,OE/KN/M,GKW,ASN,ASL,GKX,GKA/E,MIRA,FireWIN,VarioWIN,fittings cabinet Vesto 200	0	9999999999999999
250	004723	OEX881 Chain for OEX,NBE,GKX,ASN, fittings room Vesto 200	0	9999999999999999
260	006422	Pump ALPHA2 25-60 130mm	0	9999999999999999
270	060713	de: Seitenwand links braun für ASN/E ASN902	0	9999999999999999
280	060712	de: Seitenwand rechts braun für ASN/E ASN901	0	9999999999999999
290	084409	de: Seitenwand links weiß für ASN/E ASN033	0	9999999999999999
300	084417	de: Seitenwand rechts weiß für ASN/E ASN034	0	9999999999999999
310	001031	ASL004 Safety valve 1/2“ 2.5 bar for GWX,OEX,OE/KN/M,ASL,GKW,GTX,ASN,GKA/E,MIRA,FireWIN,Vesto Art.Nr.:49292, VarioWIN, fittings ca	0	9999999999999999
320	083399	ASN025,VESTO200 Base für ASN/E, fittings cabinet Vesto 200	0	9999999999999999
330	010286	ASL0021 Shut-off valve 1/4“ internal for pressure gauge R1/2“ for ASL/M,ÖR,SH,OEM,OEN,GTX,ASN,OEX,MIRA,FireWIN,fittings cabinet Ve	0	9999999999999999
340	016713	ASN0251 Hexagon screw M10x35, DIN 933 for SilvaWIN, BioWIN XL 35-60, fittings cabinet Vesto 200	0	9999999999999999
350	000027	KSL332 Immersion sleeve 130 mm long for KSL/ZHL,GKA/E,fittings cabinet Vesto200, VarioWIN	0	9999999999999999
360	009083	NB-9341 Thermostat, 3-pin for ASN,NBS/L/R/K,EKL,fittings cabinet Vesto 200	0	9999999999999999
370	075310	ASN043 Thermostat box cpl. (incl. thermostat and knob) for ASE, fittings cabinet Vesto 200	0	9999999999999999
380	087157	de: Tür braun für ASN/E (inkl. Blende,Griff) ASN920	0	9999999999999999
390	083739	ASN061 Door bearing cpl. galvanised (75x16x3) for ASN/E, fittings cabinet Vesto 200	0	9999999999999999
400	000507	KSL022 Door catch GP3-78/444, No.300.223 for NBS,ASL/N,OEN/M/X,ZHL,KSL,PMX,OKN/M,OKE/S, fittings cabinet Vesto 200	0	9999999999999999
410	005638	ASL010 Rocker switch blk./gr. 0-1 82.06.11.63.65 for OKE/S,FKV,ASL/N,GKW,NBS/L,E/SKX,GWX,FAX,GKX,GMX,SilvaWIN,fittings cabinet Ve	0	9999999999999999

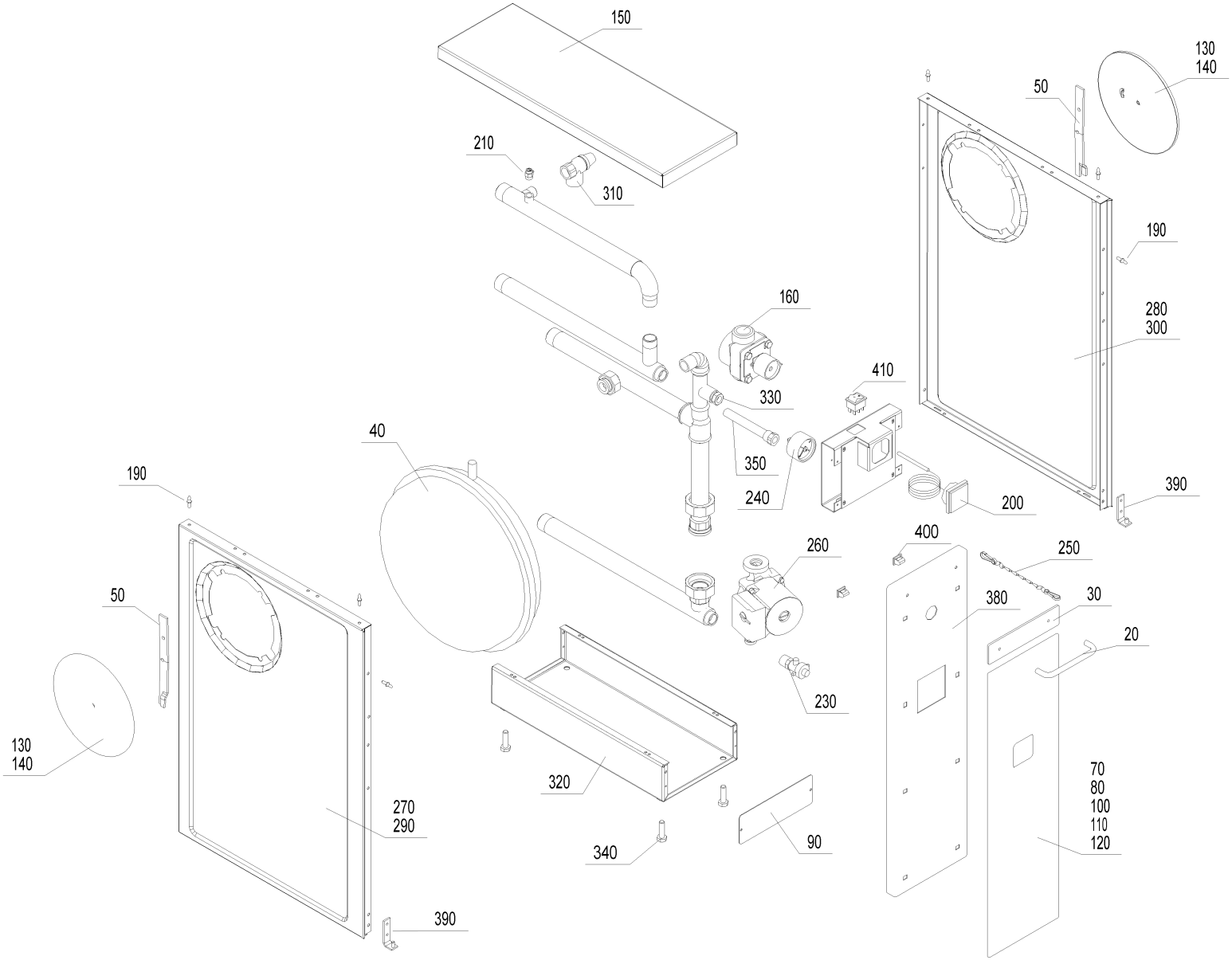
150
210
310
130
140
50
190
160
280
300
410
330
40
350
240
200
390
190
260
400
250
50
380
30
20
230
130
140
320
70
80
100
110
120
270
290
340
90
390

Item no.	Article no.	Description	Serialnumber from	Serialnumber to
20	004340	de: Alu-Griff LA 130mm,SH 35mm BR, ZHN,KSN,ASN/E	0	9999999999999999
30	004391	de: Alu-Türgriffblende ASN/E ASN0201	0	9999999999999999
40	003611	OEX101 DGN-10l expansion tank, ½" for OE/KN,OEX,GKA,ASN/E, fittings cabinet Vesto 200	0	9999999999999999
50	080098	KSN0341 Fastening clip for dummy washer for HN,KSN,ASN/E, fittings cabinet Vesto 200	0	9999999999999999
70	503053	ASN008 Brown beige ASN	0	9999999999999999
80	503055	ASN010 Dark brown ASN	0	9999999999999999
90	065471	ASN026, VESTO200 Cover for base for ASN/E, fittings cabinet Vesto 200	0	9999999999999999
100	503051	ASN006 Pearl white ASN	0	9999999999999999
110	503049	ASN003 Red brown ASN	0	9999999999999999
120	083852	de: Blende saharabeige für ASN *ASN909Ersatz ET-Nr.503052	0	9999999999999999
130	082198	de: Blindscheibe braun für KSN,ASN,ZHN	0	9999999999999999
140	081221	de: Blindscheibe weiß für ASN,KSN,ZHN KSN134	0	9999999999999999
150	083127	ASN037 Cover plate (662x302x1,25mm) for ASN, fittings cabinet Vesto 200	0	9999999999999999
160	004448	ASN060 3-way mixing valve 3/4“ for ASN/E,NBR,fittings cabinet Vesto 200	0	9999999999999999
160	010004	de: O-Ring-Dichtung Mischer AS-L,AEG 11,91x2,62mm ASL0061	0	9999999999999999
160	010005	de: Dichtung Mischerdeckel ESBE,IMT,AEG, 68x59,9x0,8 ASL0062 Vier- und Dreiweg-Mischer	0	9999999999999999
160	010006	de: Deckel Mischer, ASL ASL0063	0	9999999999999999
160	010007	de: Deckel und Einsatz 3-Weg-Mischer ESBE (ASN) ASL0064	0	9999999999999999
160	010008	de: Griff Mischer, ASL	0	9999999999999999
190	000191	KSL029 Forming screw, diameter 8x26/M5 for NBS,OEX,ASN,PMX,fittings cabinet Vesto 200, VarioWIN	0	9999999999999999
200	004049	KSN027 Thermometer Z.Nr.SK 2014 IFC 52-052 KRF for ZHN,OEX,KSN,ASN,NBE,VestoWIN Premium 200-202, VestoWIN Klassik 170-220, fitting	0	9999999999999999
210	001058	ASL001 Manually operated bleeder VFR 1/4“ for OE/KN/M,GKX,ASN,ASL,OEX, MIRA, fittings cabinet Vesto 200, VarioWIN, FireWIN	0	9999999999999999
230	004385	KFE cock	0	9999999999999999
240	001066	ASL002 Pressure gauge TYP101 Ø50 for OEX,OE/KN/M,GKW,ASN,ASL,GKX,GKA/E,MIRA,FireWIN,VarioWIN,fittings cabinet Vesto 200	0	9999999999999999
250	004723	OEX881 Chain for OEX,NBE,GKX,ASN, fittings room Vesto 200	0	9999999999999999
260	006422	Pump ALPHA2 25-60 130mm	0	9999999999999999
270	060713	de: Seitenwand links braun für ASN/E ASN902	0	9999999999999999
280	060712	de: Seitenwand rechts braun für ASN/E ASN901	0	9999999999999999
290	084409	de: Seitenwand links weiß für ASN/E ASN033	0	9999999999999999
300	084417	de: Seitenwand rechts weiß für ASN/E ASN034	0	9999999999999999
310	001031	ASL004 Safety valve 1/2“ 2.5 bar for GWX,OEX,OE/KN/M,ASL,GKW,GTX,ASN,GKA/E,MIRA,FireWIN,Vesto Art.Nr.:49292, VarioWIN, fittings ca	0	9999999999999999
320	083399	ASN025,VESTO200 Base für ASN/E, fittings cabinet Vesto 200	0	9999999999999999
330	010286	ASL0021 Shut-off valve 1/4“ internal for pressure gauge R1/2“ for ASL/M,ÖR,SH,OEM,OEN,GTX,ASN,OEX,MIRA,FireWIN,fittings cabinet Ve	0	9999999999999999
340	016713	ASN0251 Hexagon screw M10x35, DIN 933 for SilvaWIN, BioWIN XL 35-60, fittings cabinet Vesto 200	0	9999999999999999
350	000027	KSL332 Immersion sleeve 130 mm long for KSL/ZHL,GKA/E,fittings cabinet Vesto200, VarioWIN	0	9999999999999999
380	087157	de: Tür braun für ASN/E (inkl. Blende,Griff) ASN920	0	9999999999999999
390	083739	ASN061 Door bearing cpl. galvanised (75x16x3) for ASN/E, fittings cabinet Vesto 200	0	9999999999999999
400	000507	KSL022 Door catch GP3-78/444, No.300.223 for NBS,ASL/N,OEN/M/X,ZHL,KSL,PMX,OKN/M,OKE/S, fittings cabinet Vesto 200	0	9999999999999999
410	005638	ASL010 Rocker switch blk./gr. 0-1 82.06.11.63.65 for OKE/S,FKV,ASL/N,GKW,NBS/L,E/SKX,GWX,FAX,GKX,GMX,SilvaWIN,fittings cabinet Ve	0	9999999999999999

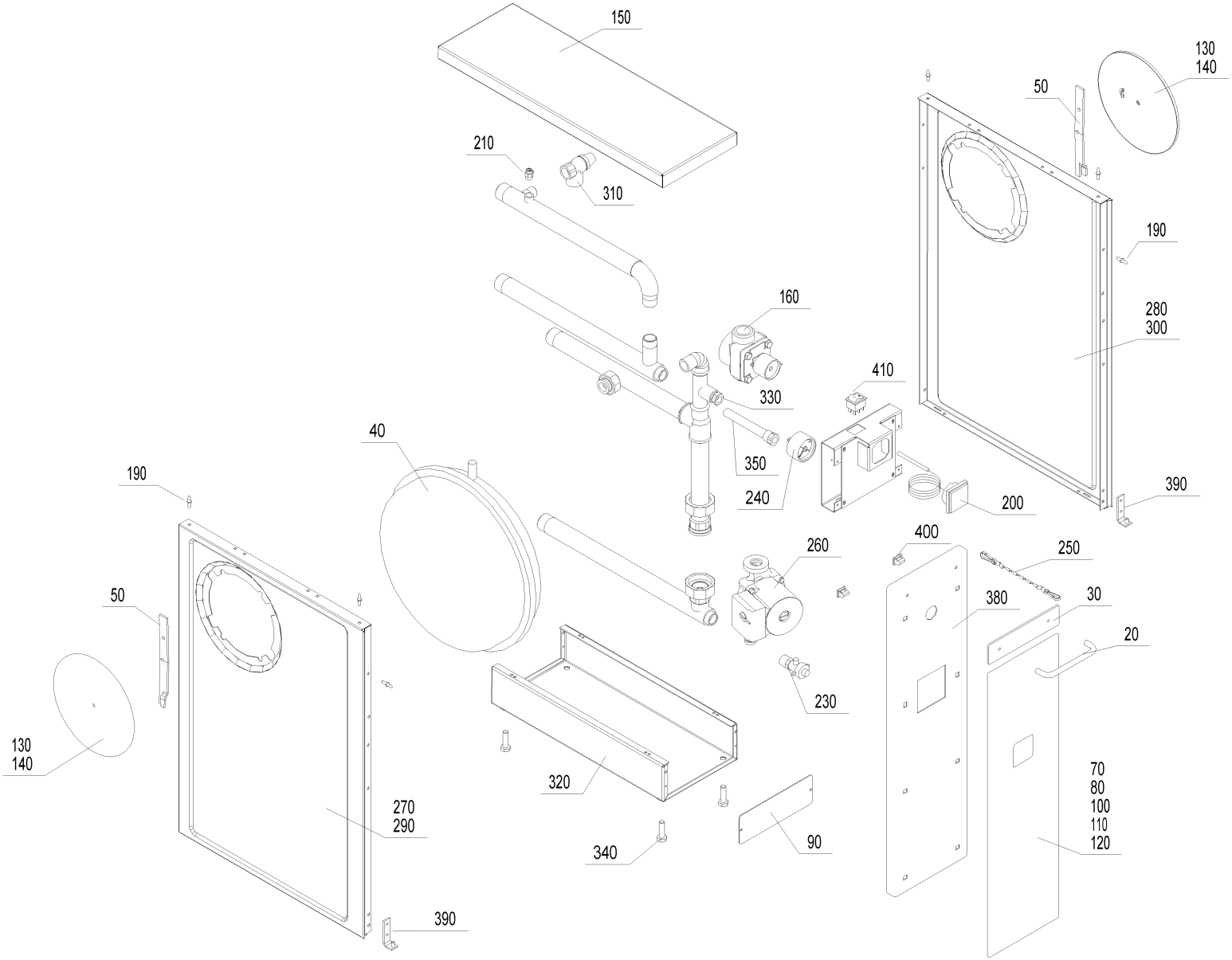
150
210
310
130
140
50
190
280
300
160
410
330
350
240
200
390
40
190
260
400
250
50
380
30
20
230
130
140
320
70
80
100
110
120
270
290
340
90
390

Item no.	Article no.	Description	Serialnumber from	Serialnumber to
20	004340	de: Alu-Griff LA 130mm,SH 35mm BR, ZHN,KSN,ASN/E	0	9999999999999999
30	004391	de: Alu-Türgriffblende ASN/E ASN0201	0	9999999999999999
40	003611	OEX101 DGN-10l expansion tank, ½" for OE/KN,OEX,GKA,ASN/E, fittings cabinet Vesto 200	0	9999999999999999
50	080098	KSN0341 Fastening clip for dummy washer for HN,KSN,ASN/E, fittings cabinet Vesto 200	0	9999999999999999
70	503053	ASN008 Brown beige ASN	0	9999999999999999
80	503055	ASN010 Dark brown ASN	0	9999999999999999
90	065471	ASN026, VESTO200 Cover for base for ASN/E, fittings cabinet Vesto 200	0	9999999999999999
100	503051	ASN006 Pearl white ASN	0	9999999999999999
110	503049	ASN003 Red brown ASN	0	9999999999999999
120	083852	de: Blende saharabeige für ASN *ASN909Ersatz ET-Nr.503052	0	9999999999999999
130	082198	de: Blindscheibe braun für KSN,ASN,ZHN	0	9999999999999999
140	081221	de: Blindscheibe weiß für ASN,KSN,ZHN KSN134	0	9999999999999999
150	083127	ASN037 Cover plate (662x302x1,25mm) for ASN, fittings cabinet Vesto 200	0	9999999999999999
160	004448	ASN060 3-way mixing valve 3/4“ for ASN/E,NBR,fittings cabinet Vesto 200	0	9999999999999999
160	010004	de: O-Ring-Dichtung Mischer AS-L,AEG 11,91x2,62mm ASL0061	0	9999999999999999
160	010005	de: Dichtung Mischerdeckel ESBE,IMT,AEG, 68x59,9x0,8 ASL0062 Vier- und Dreiweg-Mischer	0	9999999999999999
160	010006	de: Deckel Mischer, ASL ASL0063	0	9999999999999999
160	010007	de: Deckel und Einsatz 3-Weg-Mischer ESBE (ASN) ASL0064	0	9999999999999999
160	010008	de: Griff Mischer, ASL	0	9999999999999999
190	000191	KSL029 Forming screw, diameter 8x26/M5 for NBS,OEX,ASN,PMX,fittings cabinet Vesto 200, VarioWIN	0	9999999999999999
200	004049	KSN027 Thermometer Z.Nr.SK 2014 IFC 52-052 KRF for ZHN,OEX,KSN,ASN,NBE,VestoWIN Premium 200-202, VestoWIN Klassik 170-220, fitting	0	9999999999999999
210	001058	ASL001 Manually operated bleeder VFR 1/4“ for OE/KN/M,GKX,ASN,ASL,OEX, MIRA, fittings cabinet Vesto 200, VarioWIN, FireWIN	0	9999999999999999
230	004385	KFE cock	0	9999999999999999
240	001066	ASL002 Pressure gauge TYP101 Ø50 for OEX,OE/KN/M,GKW,ASN,ASL,GKX,GKA/E,MIRA,FireWIN,VarioWIN,fittings cabinet Vesto 200	0	9999999999999999
250	004723	OEX881 Chain for OEX,NBE,GKX,ASN, fittings room Vesto 200	0	9999999999999999
260	006422	Pump ALPHA2 25-60 130mm	0	9999999999999999
270	060713	de: Seitenwand links braun für ASN/E ASN902	0	9999999999999999
280	060712	de: Seitenwand rechts braun für ASN/E ASN901	0	9999999999999999
290	084409	de: Seitenwand links weiß für ASN/E ASN033	0	9999999999999999
300	084417	de: Seitenwand rechts weiß für ASN/E ASN034	0	9999999999999999
310	001031	ASL004 Safety valve 1/2“ 2.5 bar for GWX,OEX,OE/KN/M,ASL,GKW,GTX,ASN,GKA/E,MIRA,FireWIN,Vesto Art.Nr.:49292, VarioWIN, fittings ca	0	9999999999999999
320	083399	ASN025,VESTO200 Base für ASN/E, fittings cabinet Vesto 200	0	9999999999999999
330	010286	ASL0021 Shut-off valve 1/4“ internal for pressure gauge R1/2“ for ASL/M,ÖR,SH,OEM,OEN,GTX,ASN,OEX,MIRA,FireWIN,fittings cabinet Ve	0	9999999999999999
340	016713	ASN0251 Hexagon screw M10x35, DIN 933 for SilvaWIN, BioWIN XL 35-60, fittings cabinet Vesto 200	0	9999999999999999
350	000027	KSL332 Immersion sleeve 130 mm long for KSL/ZHL,GKA/E,fittings cabinet Vesto200, VarioWIN	0	9999999999999999
380	087157	de: Tür braun für ASN/E (inkl. Blende,Griff) ASN920	0	9999999999999999
390	083739	ASN061 Door bearing cpl. galvanised (75x16x3) for ASN/E, fittings cabinet Vesto 200	0	9999999999999999
400	000507	KSL022 Door catch GP3-78/444, No.300.223 for NBS,ASL/N,OEN/M/X,ZHL,KSL,PMX,OKN/M,OKE/S, fittings cabinet Vesto 200	0	9999999999999999
410	005638	ASL010 Rocker switch blk./gr. 0-1 82.06.11.63.65 for OKE/S,FKV,ASL/N,GKW,NBS/L,E/SKX,GWX,FAX,GKX,GMX,SilvaWIN,fittings cabinet Ve	0	9999999999999999

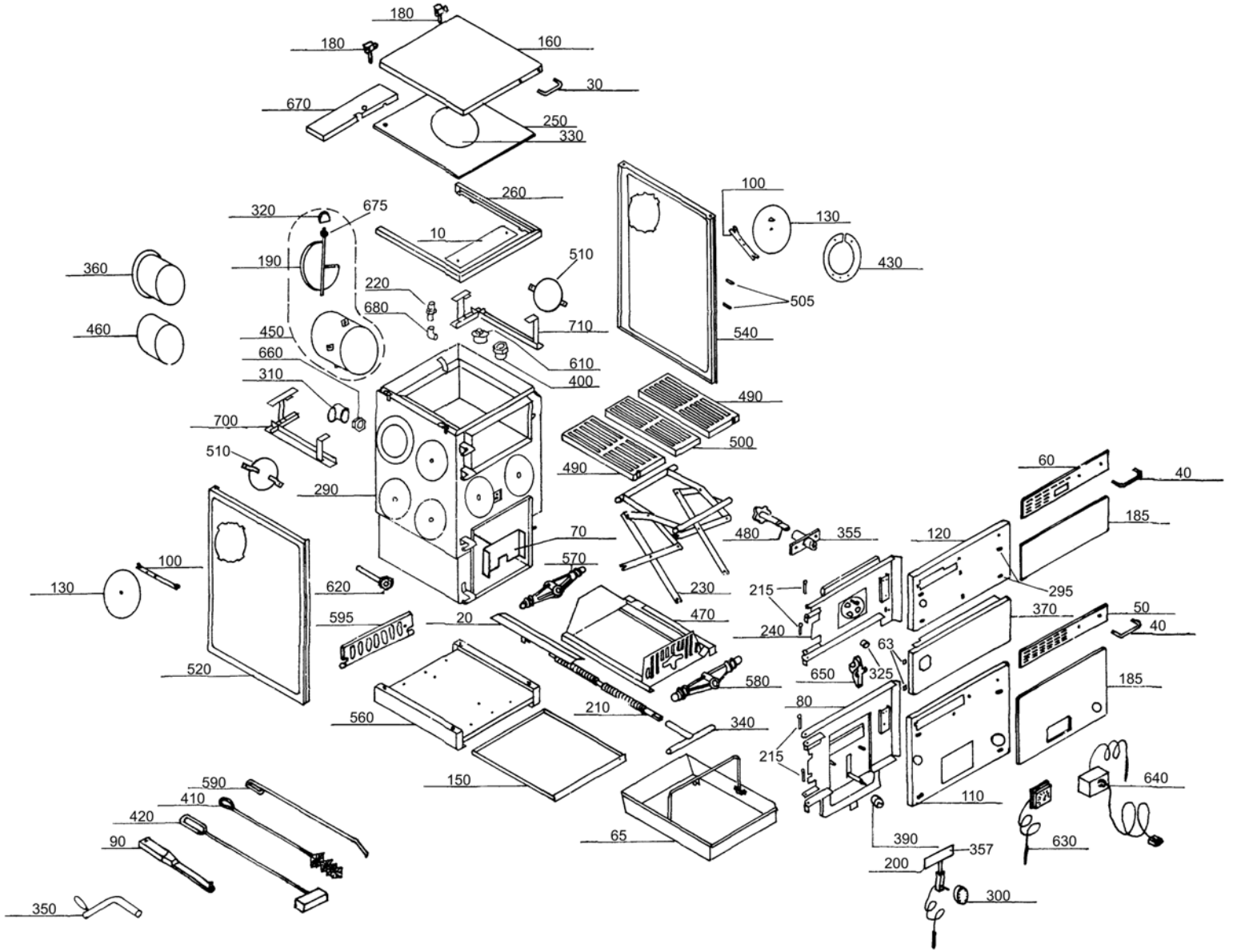
180
180
160
30
670
250
330
260
100
130
430
320
675
10
190
510
360
220
680
505
460
450
710
540
660
610
310
400
490
700
500
510
490
60
40
290
185
70
480
355
120
100
570
130
620
230
215
295
595
20
470
370
50
40
240
63
520
650
325
580
185
80
560
210
340
215
590
150
640
410
110
420
65
390
357
630
90
200
300
350

Item no.	Article no.	Description	Serialnumber from	Serialnumber
10	076236	Oven frame cover for KSL,KSN150/160/200,VestoWIN Klassik 170	0	9999999999999
20	081582	Cover for threaded spindle for KSN,ZHN,VestoWIN Klassik 170-220	0	9999999999999
30	004332	de: Alu-Griff LA 130mm,SH 45mm BR Deckel KSN,ZHN	0	9999999999999
36	025925	de: Knopf für Zweitluft D10x10 elox. KSN/ZHN	0	9999999999999
40	004340	de: Alu-Griff LA 130mm,SH 35mm BR, ZHN,KSN,ASN/E	0	9999999999999
50	004170	de: Alu-Türgriffblende eloxiert KSN150/160/200 Aschetür	0	9999999999999
60	004162	de: Alu-Türgriffblende eloxiert ZHN,KSN150/160/200 Heiztür	0	9999999999999
63	008893	de: Arretierung schwarz E/SKX,HMX,FKX,MIRA	0	9999999999999
65	080810	de: Aschelade für ZHN, KSN150/160/200	0	9999999999999
70	081507	de: Aschekippblech (254x82x3) für KSN150/160/200 KSN110	0	9999999999999
80	085308	de: Aschetür für ZHN 212,KSN150/160/200	0	9999999999999
90	073407	Operating handle for FKV,KSL,ZHL,FKN,FAX,ZHN,KSN,FKH,HMX,VestoWIN Premium 200-202, VestoWIN Klassik 170-220	0	9999999999999
100	080098	KSN0341 Fastening clip for dummy washer for HN,KSN,ASN/E, fittings cabinet Vesto 200	0	9999999999999
110	085391	de: Blende Aschetür braun ZHN 212,KSN150/160/200 KSN0121	0	9999999999999
120	088986	de: Blende Heiztür braun KSN150/160/200,ZHN212/182 KSN0141	0	9999999999999
130	081221	de: Blindscheibe weiß für ASN,KSN,ZHN KSN134	0	9999999999999
130	082198	de: Blindscheibe braun für KSN,ASN,ZHN	0	9999999999999
150	080500	Ground tray (498x416x0,9) for ZHN,KSN150/160/200, VestoWIN Premium 200-202, VestoWIN Klassik 170	0	9999999999999
160	076880	de: Deckel weiß für KSN 150/160/200,ZHN 212 Kesselseite KSN086	0	9999999999999
160	085375	de: Deckel braun KSN 150/160/200,ZHN 212 für Kesselseite	0	9999999999999
170	023922	Insulating cover support Ø20x15mm for KSN/ZHN,VestoWIN Klassik 170-220, VestoWIN Premium 200-202	0	9999999999999
180	004308	Cover hinge for KSN/ZHN, VestoWIN Klassik 170-220, VestoWIN Premium 200-202	0	9999999999999
185	503006	KSN003 Red-brown for KSN 150/160/200	0	9999999999999
185	503008	KSN006 Pearl white for KSN 150/160/200	0	9999999999999
185	503009	KSN007 Sahara-beige for KSN 150/160/200	0	9999999999999
185	503010	KSN008 brown-beige for KSN 150/160/200	0	9999999999999
185	503012	KSN010 Dark-brown for KSN 150/160/200	0	9999999999999
190	041694	Throttle flap for KSN150/160/200,ZHN160/162, VestoWIN Klassik 170	0	9999999999999
200	004030	Combustion controlling mechanism for KSN,ZHN,FKV,VestoWIN Klassik 170-220, VestoWIN Premium 200-202	0	9999999999999
210	081213	Threaded spindle (Ø20x377) for KSN,ZHN,VestoWIN Klassik 170-220, VestoWIN Premium 200-202	0	9999999999999
215	012998	de: HR-Stifte 6X41 gerändelt KSN,ZHN	0	9999999999999
220	004863	Manually operated bleeder VFR 3/8" for ZHN,KSN,GKW,NBE115,GKA/E,VestoWIN Klassik 170-220, VestoWIN Premium 200-202	0	9999999999999
230	080675	Lifting jack for ZHN,KSN160/200/150, VestoWIN Premium 200-202, VestoWIN Klassik 170	0	9999999999999
240	085359	de: Heiztür für KSN 160/200/150,ZHN 212	0	9999999999999
250	004081	Boiler hot plate (418x505x7mm) for KSN160/200/150,ZHN18/21, VestoWIN Premium 200-202, VestoWIN Klassik 170	0	9999999999999
250	004664	KSN015 Steel hot plate	0	9999999999999
260	080667	Stove frame KSN 160/200/150 and VEK170 to lot 2	0	9999999999999
290	060285	de: Kessel KSN 200/150	0	9999999999999
291	060287	de: Zubehör für Kesseltausch für KSN	0	9999999999999
295	023949	de: Hutfix SCO 6820 VERZ/GE Klammern Dekor ASN,ZHN,KSN,OEX	0	9999999999999
300	004057	Knob no.30.298-002-001 for ZHN,FKV,VestoWIN Klassik 170-220, VestoWIN Premium 200-202	0	9999999999999
310	012513	Knee no.95T 5/4“ for KSN, VestoWIN Premium 200-202, VestoWIN Klassik 170-220	0	9999999999999
320	023906	Throttle flap button (D10x15) for KSN,ZHN,VestoWIN Klassik 170-220, VestoWIN Premium 200-202	0	9999999999999
325	025925	de: Knopf für Zweitluft D10x10 elox. KSN/ZHN	0	9999999999999
330	056780	Smoke hole cover (Ø=220mm) for ZHN,KSN,KSL,VestoWIN Klassik 170-220	0	9999999999999
340	081094	de: Kurbel für Hebevorrichtung für ZHN,KSN KSN192	0	9999999999999
350	085146	Crank for vibration device and grate lifting equipment for KSN,ZHN,VestoWIN Klassik 170-220	0	9999999999999
355	081043	de: Lagerbock für Rüttelachse für KSN,ZHN180/182,210/212	0	9999999999999
357	072362	de: Luftklappe für Feuerungsregler (191x82x0,75) für KSL,ZHL KSL317 ZHN,KSN150/160/200	0	9999999999999
360	072230	Wall support for ZHN16,KSN160/200/150, VestoWIN Klassik 170	0	9999999999999
370	063579	de: Mittelblende weiß für KSN 160/200/150	0	9999999999999

Item no.	Article no.	Description	Serialnumber from	Serialnumber t
370	081450	de: Mittelblende braun für KSN 160/200/150	0	9999999999999
390	004065	KSN809 Knurled button for ZHN,KSN,VestoWIN Klassik 170-220, VestoWIN Premium 200-202, EasyWIN Klassik/Premium 180	0	9999999999999
400	004014	KSN095 241 5/4“-1“ reduction nipple, black for KSN,ZHN,VestoWIN Klassik 170-220, VestoWIN Premium 200-202	0	9999999999999
410	000280	KSL194 Cleaning brush (680x80/57x40) for FKU,ZHN,KSN,ZHL,KS,FKX,VestoWIN Klassik 170-220, VestoWIN Premium 200-202	0	9999999999999
420	072192	Scratcher	0	9999999999999
430	082309	de: Ring für Rohrstutzen weiß für KSN 160/200/150 KSN153	0	9999999999999
430	082317	de: Ring für Rohrstutzen braun für KSN 160/200/150	0	9999999999999
450	086681	KSN050 Flue outlet with throttle flap (Ø=130) T for KSN160/200/150, VestoWIn Klassik 170	0	9999999999999
460	072249	KSL051 Smoke pipe (Ø=130mm) for KSL15/20,ZHN16,KSN160/200/150, VestoWIN Premium 170	0	9999999999999
470	080292	KSN019 Grate support complete for ZHN,KSN160/200/150, VestoWIN Premium 200-202, VestoWIN Klassik 170	0	9999999999999
480	080861	de: Rüttelachse (D16x133) KSN,ZHN KSN0051	0	9999999999999
490	004138	de: Rüttelrost (Mod.1-322-261) ZHN18/21,KSN150/200	0	9999999999999
505	008885	Locking pin, black Nr: 00910-000-000 FKN088, HMX,NBL,E/SKX,FKX	0	9999999999999
510	081612	KSN054 Protective plate for extraction of flue gas for KSN150/160/200, VestoWIN Klassik 170	0	9999999999999
520	075183	de: Seitenwand links weiß kpl. KSN,ZHN	0	9999999999999
520	082147	de: Seitenwand links braun KSN/ZHN	0	9999999999999
540	075191	de: Seitenwand rechts weiß kpl. KSN,ZHN	0	9999999999999
540	082163	de: Seitenwand rechts braun KSN,ZHN	0	9999999999999
560	086673	de: Sockel für KSN 160/200/150	0	9999999999999
570	060558	Nut for lifting equipment rear for ZHN210/212,KSN160/200/150,VestoWIN Klassik 170, VestoWIN Premium 200-202	0	9999999999999
580	081485	Nut for lifting equipment front for ZHN210/212,KSN160/200/150,VestoWIN Klassik 170, VestoWIN Premium 200-202	0	9999999999999
590	072222	Poker (D9x750) for KSL,ZHL,ZHN,KSN,VestoWIN Klassik 170-220, VestoWIN Premium 200-202	0	9999999999999
595	082015	de: Stehrost für KSN 160/200/150, ZHN	0	9999999999999
610	004197	KSN094 WAF Plug no.290 5/4" for ZHN,KSN,Vesto WIN Klassik 170-220, VestoWIN Premium 200-202	0	9999999999999
620	005452	OK-915 Immersion sleeve (129 mm) No.55501.04 for EKX,OK/E,GWX,KSN,ZHN,OK-915,ETX,SNX,FKX,MIRA,FireWIN,VestoWIN Klassik 170-220,	0	9999999999999
630	004049	KSN027 Thermometer Z.Nr.SK 2014 IFC 52-052 KRF for ZHN,OEX,KSN,ASN,NBE,VestoWIN Premium 200-202, VestoWIN Klassik 170-220, fitting	0	9999999999999
640	010421	KSN100 Thermostat minimal 716 RU-9289 0-95 Grades for FK,GWX,KSN,ZHN,GSX,ETX,SNX,FKX,VestoWIN Klassik 170-220, VestoWIN Premium 20	0	9999999999999
650	061840	KSN022 Door catch for KSN,ZHN,PMX, VestoWIN Premium 200-202, VestoWIN Klassik 170-220	0	9999999999999
660	004413	KSN099 Union nut no.374 5/4“ for VestoWIN Premium 200-202, VestoWIN Klassik 170-220	0	9999999999999
670	080659	de: Wandabschlußleiste (502x108x1,25) KSN160/200/150/VEK170 KSN045	0	9999999999999
675	080985	de: Welle für Drosselklappe (D8x253) KSN150/160/200,ZHN16	0	9999999999999
680	004006	KSN097 Bracket no.92 3/8“ for ZHN,KSN,VestoWIN Klassik 170-220, VestoWIN Premium 200-202	0	9999999999999
700	081299	de: Zugeinhängung links für KSN 200/150 KSN0551	0	9999999999999
710	081302	de: Zugeinhängung rechts für KSN 200/150 KSN0561	0	9999999999999

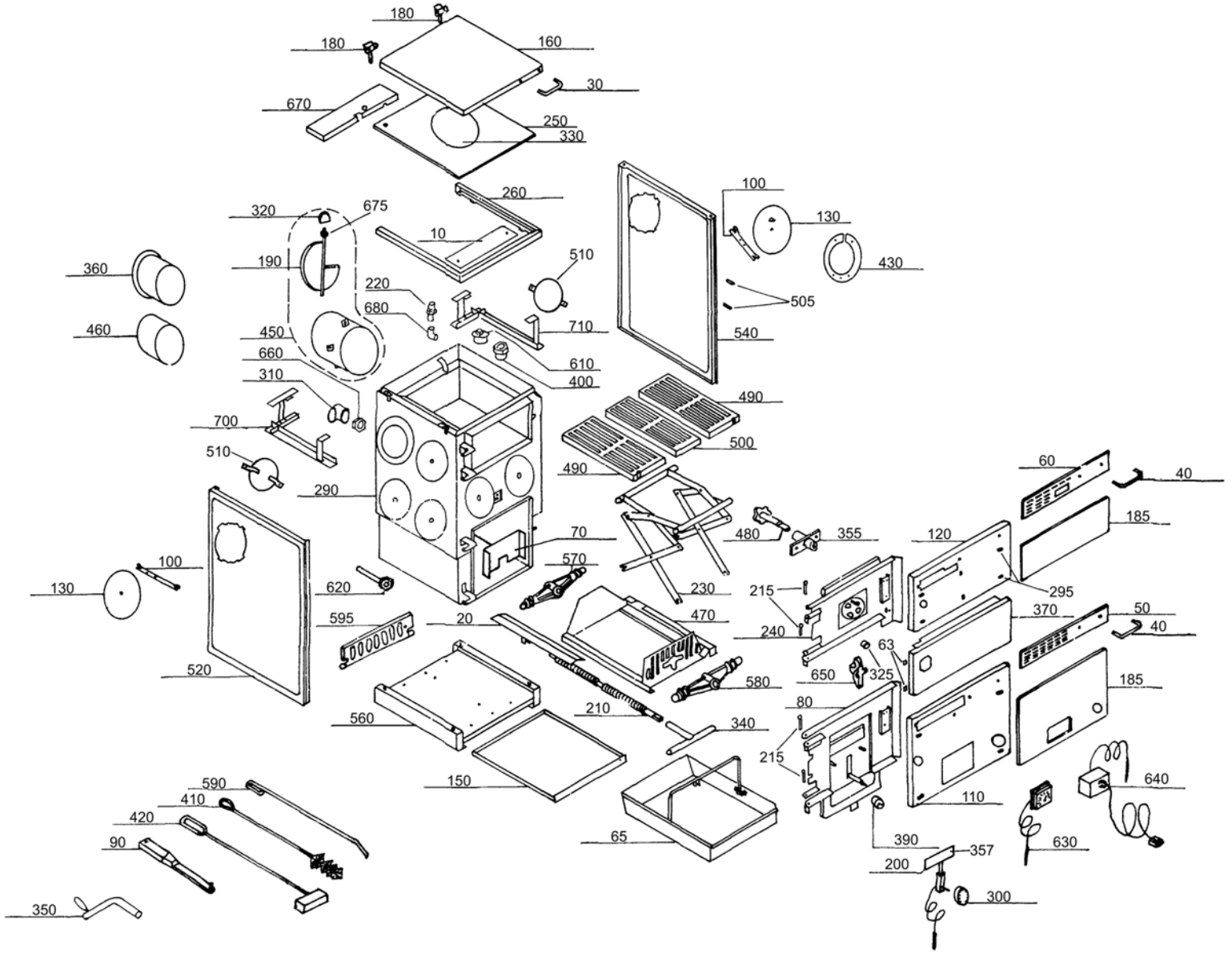
180
180
160
30
670
250
330
260
100
130
430
320
675
10
190
510
360
220
680
505
460
450
710
540
660
610
310
400
490
700
500
510
490
60
40
290
185
70
480
355
120
100
570
130
620
230
215
295
595
20
470
370
50
40
240
63
520
650
325
580
185
80
560
210
340
215
590
150
640
410
110
420
65
390
357
630
90
200
300
350

Item no.	Article no.	Description	Serialnumber from	Serialnumber
10	076236	Oven frame cover for KSL,KSN150/160/200,VestoWIN Klassik 170	0	9999999999999
20	081582	Cover for threaded spindle for KSN,ZHN,VestoWIN Klassik 170-220	0	9999999999999
30	004332	de: Alu-Griff LA 130mm,SH 45mm BR Deckel KSN,ZHN	0	9999999999999
36	025925	de: Knopf für Zweitluft D10x10 elox. KSN/ZHN	0	9999999999999
40	004340	de: Alu-Griff LA 130mm,SH 35mm BR, ZHN,KSN,ASN/E	0	9999999999999
50	004170	de: Alu-Türgriffblende eloxiert KSN150/160/200 Aschetür	0	9999999999999
60	004162	de: Alu-Türgriffblende eloxiert ZHN,KSN150/160/200 Heiztür	0	9999999999999
63	008893	de: Arretierung schwarz E/SKX,HMX,FKX,MIRA	0	9999999999999
65	080810	de: Aschelade für ZHN, KSN150/160/200	0	9999999999999
70	081507	de: Aschekippblech (254x82x3) für KSN150/160/200 KSN110	0	9999999999999
80	085308	de: Aschetür für ZHN 212,KSN150/160/200	0	9999999999999
90	073407	Operating handle for FKV,KSL,ZHL,FKN,FAX,ZHN,KSN,FKH,HMX,VestoWIN Premium 200-202, VestoWIN Klassik 170-220	0	9999999999999
100	080098	KSN0341 Fastening clip for dummy washer for HN,KSN,ASN/E, fittings cabinet Vesto 200	0	9999999999999
110	085391	de: Blende Aschetür braun ZHN 212,KSN150/160/200 KSN0121	0	9999999999999
120	088986	de: Blende Heiztür braun KSN150/160/200,ZHN212/182 KSN0141	0	9999999999999
130	081221	de: Blindscheibe weiß für ASN,KSN,ZHN KSN134	0	9999999999999
130	082198	de: Blindscheibe braun für KSN,ASN,ZHN	0	9999999999999
150	080500	Ground tray (498x416x0,9) for ZHN,KSN150/160/200, VestoWIN Premium 200-202, VestoWIN Klassik 170	0	9999999999999
160	076880	de: Deckel weiß für KSN 150/160/200,ZHN 212 Kesselseite KSN086	0	9999999999999
160	085375	de: Deckel braun KSN 150/160/200,ZHN 212 für Kesselseite	0	9999999999999
170	023922	Insulating cover support Ø20x15mm for KSN/ZHN,VestoWIN Klassik 170-220, VestoWIN Premium 200-202	0	9999999999999
180	004308	Cover hinge for KSN/ZHN, VestoWIN Klassik 170-220, VestoWIN Premium 200-202	0	9999999999999
185	503006	KSN003 Red-brown for KSN 150/160/200	0	9999999999999
185	503008	KSN006 Pearl white for KSN 150/160/200	0	9999999999999
185	503009	KSN007 Sahara-beige for KSN 150/160/200	0	9999999999999
185	503010	KSN008 brown-beige for KSN 150/160/200	0	9999999999999
185	503012	KSN010 Dark-brown for KSN 150/160/200	0	9999999999999
190	041694	Throttle flap for KSN150/160/200,ZHN160/162, VestoWIN Klassik 170	0	9999999999999
200	004030	Combustion controlling mechanism for KSN,ZHN,FKV,VestoWIN Klassik 170-220, VestoWIN Premium 200-202	0	9999999999999
210	081213	Threaded spindle (Ø20x377) for KSN,ZHN,VestoWIN Klassik 170-220, VestoWIN Premium 200-202	0	9999999999999
215	012998	de: HR-Stifte 6X41 gerändelt KSN,ZHN	0	9999999999999
220	004863	Manually operated bleeder VFR 3/8" for ZHN,KSN,GKW,NBE115,GKA/E,VestoWIN Klassik 170-220, VestoWIN Premium 200-202	0	9999999999999
230	080675	Lifting jack for ZHN,KSN160/200/150, VestoWIN Premium 200-202, VestoWIN Klassik 170	0	9999999999999
240	085359	de: Heiztür für KSN 160/200/150,ZHN 212	0	9999999999999
250	004081	Boiler hot plate (418x505x7mm) for KSN160/200/150,ZHN18/21, VestoWIN Premium 200-202, VestoWIN Klassik 170	0	9999999999999
250	004664	KSN015 Steel hot plate	0	9999999999999
260	080667	Stove frame KSN 160/200/150 and VEK170 to lot 2	0	9999999999999
290	060285	de: Kessel KSN 200/150	0	9999999999999
291	060287	de: Zubehör für Kesseltausch für KSN	0	9999999999999
295	023949	de: Hutfix SCO 6820 VERZ/GE Klammern Dekor ASN,ZHN,KSN,OEX	0	9999999999999
300	004057	Knob no.30.298-002-001 for ZHN,FKV,VestoWIN Klassik 170-220, VestoWIN Premium 200-202	0	9999999999999
310	012513	Knee no.95T 5/4“ for KSN, VestoWIN Premium 200-202, VestoWIN Klassik 170-220	0	9999999999999
320	023906	Throttle flap button (D10x15) for KSN,ZHN,VestoWIN Klassik 170-220, VestoWIN Premium 200-202	0	9999999999999
325	025925	de: Knopf für Zweitluft D10x10 elox. KSN/ZHN	0	9999999999999
330	056780	Smoke hole cover (Ø=220mm) for ZHN,KSN,KSL,VestoWIN Klassik 170-220	0	9999999999999
340	081094	de: Kurbel für Hebevorrichtung für ZHN,KSN KSN192	0	9999999999999
350	085146	Crank for vibration device and grate lifting equipment for KSN,ZHN,VestoWIN Klassik 170-220	0	9999999999999
355	081043	de: Lagerbock für Rüttelachse für KSN,ZHN180/182,210/212	0	9999999999999
357	072362	de: Luftklappe für Feuerungsregler (191x82x0,75) für KSL,ZHL KSL317 ZHN,KSN150/160/200	0	9999999999999
360	072230	Wall support for ZHN16,KSN160/200/150, VestoWIN Klassik 170	0	9999999999999
370	063579	de: Mittelblende weiß für KSN 160/200/150	0	9999999999999

Item no.	Article no.	Description	Serialnumber from	Serialnumber t
370	081450	de: Mittelblende braun für KSN 160/200/150	0	9999999999999
390	004065	KSN809 Knurled button for ZHN,KSN,VestoWIN Klassik 170-220, VestoWIN Premium 200-202, EasyWIN Klassik/Premium 180	0	9999999999999
400	004014	KSN095 241 5/4“-1“ reduction nipple, black for KSN,ZHN,VestoWIN Klassik 170-220, VestoWIN Premium 200-202	0	9999999999999
410	000280	KSL194 Cleaning brush (680x80/57x40) for FKU,ZHN,KSN,ZHL,KS,FKX,VestoWIN Klassik 170-220, VestoWIN Premium 200-202	0	9999999999999
420	072192	Scratcher	0	9999999999999
430	082309	de: Ring für Rohrstutzen weiß für KSN 160/200/150 KSN153	0	9999999999999
430	082317	de: Ring für Rohrstutzen braun für KSN 160/200/150	0	9999999999999
450	086681	KSN050 Flue outlet with throttle flap (Ø=130) T for KSN160/200/150, VestoWIn Klassik 170	0	9999999999999
460	072249	KSL051 Smoke pipe (Ø=130mm) for KSL15/20,ZHN16,KSN160/200/150, VestoWIN Premium 170	0	9999999999999
470	080292	KSN019 Grate support complete for ZHN,KSN160/200/150, VestoWIN Premium 200-202, VestoWIN Klassik 170	0	9999999999999
480	080861	de: Rüttelachse (D16x133) KSN,ZHN KSN0051	0	9999999999999
490	004138	de: Rüttelrost (Mod.1-322-261) ZHN18/21,KSN150/200	0	9999999999999
505	008885	Locking pin, black Nr: 00910-000-000 FKN088, HMX,NBL,E/SKX,FKX	0	9999999999999
510	081612	KSN054 Protective plate for extraction of flue gas for KSN150/160/200, VestoWIN Klassik 170	0	9999999999999
520	075183	de: Seitenwand links weiß kpl. KSN,ZHN	0	9999999999999
520	082147	de: Seitenwand links braun KSN/ZHN	0	9999999999999
540	075191	de: Seitenwand rechts weiß kpl. KSN,ZHN	0	9999999999999
540	082163	de: Seitenwand rechts braun KSN,ZHN	0	9999999999999
560	086673	de: Sockel für KSN 160/200/150	0	9999999999999
570	060558	Nut for lifting equipment rear for ZHN210/212,KSN160/200/150,VestoWIN Klassik 170, VestoWIN Premium 200-202	0	9999999999999
580	081485	Nut for lifting equipment front for ZHN210/212,KSN160/200/150,VestoWIN Klassik 170, VestoWIN Premium 200-202	0	9999999999999
590	072222	Poker (D9x750) for KSL,ZHL,ZHN,KSN,VestoWIN Klassik 170-220, VestoWIN Premium 200-202	0	9999999999999
595	082015	de: Stehrost für KSN 160/200/150, ZHN	0	9999999999999
610	004197	KSN094 WAF Plug no.290 5/4" for ZHN,KSN,Vesto WIN Klassik 170-220, VestoWIN Premium 200-202	0	9999999999999
620	005452	OK-915 Immersion sleeve (129 mm) No.55501.04 for EKX,OK/E,GWX,KSN,ZHN,OK-915,ETX,SNX,FKX,MIRA,FireWIN,VestoWIN Klassik 170-220,	0	9999999999999
630	004049	KSN027 Thermometer Z.Nr.SK 2014 IFC 52-052 KRF for ZHN,OEX,KSN,ASN,NBE,VestoWIN Premium 200-202, VestoWIN Klassik 170-220, fitting	0	9999999999999
640	010421	KSN100 Thermostat minimal 716 RU-9289 0-95 Grades for FK,GWX,KSN,ZHN,GSX,ETX,SNX,FKX,VestoWIN Klassik 170-220, VestoWIN Premium 20	0	9999999999999
650	061840	KSN022 Door catch for KSN,ZHN,PMX, VestoWIN Premium 200-202, VestoWIN Klassik 170-220	0	9999999999999
660	004413	KSN099 Union nut no.374 5/4“ for VestoWIN Premium 200-202, VestoWIN Klassik 170-220	0	9999999999999
670	080659	de: Wandabschlußleiste (502x108x1,25) KSN160/200/150/VEK170 KSN045	0	9999999999999
675	080985	de: Welle für Drosselklappe (D8x253) KSN150/160/200,ZHN16	0	9999999999999
680	004006	KSN097 Bracket no.92 3/8“ for ZHN,KSN,VestoWIN Klassik 170-220, VestoWIN Premium 200-202	0	9999999999999
700	081299	de: Zugeinhängung links für KSN 200/150 KSN0551	0	9999999999999
710	081302	de: Zugeinhängung rechts für KSN 200/150 KSN0561	0	9999999999999

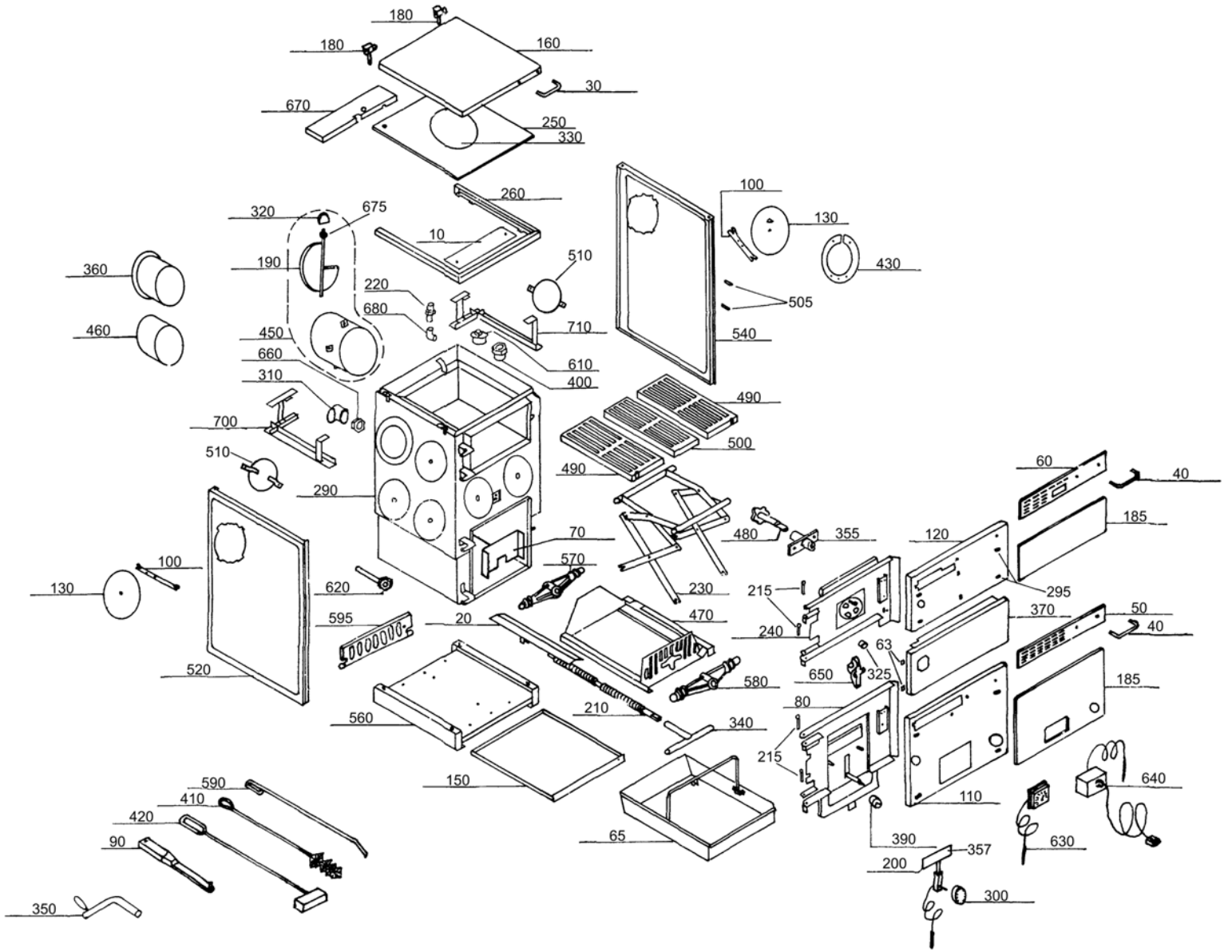
180
180
160
30
670
250
330
260
100
130
430
320
675
10
190
510
360
220
680
505
460
450
710
540
660
610
310
400
490
700
500
510
490
60
40
290
185
70
480
355
120
100
570
130
620
230
215
295
595
20
470
370
50
40
240
63
520
650
325
580
185
80
560
210
340
215
590
150
640
410
110
420
65
390
357
630
90
200
300
350

Item no.	Article no.	Description	Serialnumber from	Serialnumber t
10	076236	Oven frame cover for KSL,KSN150/160/200,VestoWIN Klassik 170	0	9999999999999
20	081582	Cover for threaded spindle for KSN,ZHN,VestoWIN Klassik 170-220	0	9999999999999
30	004332	de: Alu-Griff LA 130mm,SH 45mm BR Deckel KSN,ZHN	0	9999999999999
36	025925	de: Knopf für Zweitluft D10x10 elox. KSN/ZHN	0	9999999999999
40	004340	de: Alu-Griff LA 130mm,SH 35mm BR, ZHN,KSN,ASN/E	0	9999999999999
50	004170	de: Alu-Türgriffblende eloxiert KSN150/160/200 Aschetür	0	9999999999999
60	004162	de: Alu-Türgriffblende eloxiert ZHN,KSN150/160/200 Heiztür	0	9999999999999
63	008893	de: Arretierung schwarz E/SKX,HMX,FKX,MIRA	0	9999999999999
65	080810	de: Aschelade für ZHN, KSN150/160/200	0	9999999999999
70	081507	de: Aschekippblech (254x82x3) für KSN150/160/200 KSN110	0	9999999999999
80	085308	de: Aschetür für ZHN 212,KSN150/160/200	0	9999999999999
90	073407	Operating handle for FKV,KSL,ZHL,FKN,FAX,ZHN,KSN,FKH,HMX,VestoWIN Premium 200-202, VestoWIN Klassik 170-220	0	9999999999999
100	080098	KSN0341 Fastening clip for dummy washer for HN,KSN,ASN/E, fittings cabinet Vesto 200	0	9999999999999
110	085391	de: Blende Aschetür braun ZHN 212,KSN150/160/200 KSN0121	0	9999999999999
120	088986	de: Blende Heiztür braun KSN150/160/200,ZHN212/182 KSN0141	0	9999999999999
130	081221	de: Blindscheibe weiß für ASN,KSN,ZHN KSN134	0	9999999999999
130	082198	de: Blindscheibe braun für KSN,ASN,ZHN	0	9999999999999
150	080500	Ground tray (498x416x0,9) for ZHN,KSN150/160/200, VestoWIN Premium 200-202, VestoWIN Klassik 170	0	9999999999999
160	076880	de: Deckel weiß für KSN 150/160/200,ZHN 212 Kesselseite KSN086	0	9999999999999
160	085375	de: Deckel braun KSN 150/160/200,ZHN 212 für Kesselseite	0	9999999999999
170	023922	Insulating cover support Ø20x15mm for KSN/ZHN,VestoWIN Klassik 170-220, VestoWIN Premium 200-202	0	9999999999999
180	004308	Cover hinge for KSN/ZHN, VestoWIN Klassik 170-220, VestoWIN Premium 200-202	0	9999999999999
185	503006	KSN003 Red-brown for KSN 150/160/200	0	9999999999999
185	503008	KSN006 Pearl white for KSN 150/160/200	0	9999999999999
185	503009	KSN007 Sahara-beige for KSN 150/160/200	0	9999999999999
185	503010	KSN008 brown-beige for KSN 150/160/200	0	9999999999999
185	503012	KSN010 Dark-brown for KSN 150/160/200	0	9999999999999
190	041694	Throttle flap for KSN150/160/200,ZHN160/162, VestoWIN Klassik 170	0	9999999999999
200	004030	Combustion controlling mechanism for KSN,ZHN,FKV,VestoWIN Klassik 170-220, VestoWIN Premium 200-202	0	9999999999999
210	081213	Threaded spindle (Ø20x377) for KSN,ZHN,VestoWIN Klassik 170-220, VestoWIN Premium 200-202	0	9999999999999
215	012998	de: HR-Stifte 6X41 gerändelt KSN,ZHN	0	9999999999999
220	004863	Manually operated bleeder VFR 3/8" for ZHN,KSN,GKW,NBE115,GKA/E,VestoWIN Klassik 170-220, VestoWIN Premium 200-202	0	9999999999999
230	080675	Lifting jack for ZHN,KSN160/200/150, VestoWIN Premium 200-202, VestoWIN Klassik 170	0	9999999999999
240	085359	de: Heiztür für KSN 160/200/150,ZHN 212	0	9999999999999
250	004081	Boiler hot plate (418x505x7mm) for KSN160/200/150,ZHN18/21, VestoWIN Premium 200-202, VestoWIN Klassik 170	0	9999999999999
250	004664	KSN015 Steel hot plate	0	9999999999999
260	080667	Stove frame KSN 160/200/150 and VEK170 to lot 2	0	9999999999999
290	060555	de: Kessel für KSN 160	0	9999999999999
291	060287	de: Zubehör für Kesseltausch für KSN	0	9999999999999
295	023949	de: Hutfix SCO 6820 VERZ/GE Klammern Dekor ASN,ZHN,KSN,OEX	0	9999999999999
300	004057	Knob no.30.298-002-001 for ZHN,FKV,VestoWIN Klassik 170-220, VestoWIN Premium 200-202	0	9999999999999
310	012513	Knee no.95T 5/4“ for KSN, VestoWIN Premium 200-202, VestoWIN Klassik 170-220	0	9999999999999
320	023906	Throttle flap button (D10x15) for KSN,ZHN,VestoWIN Klassik 170-220, VestoWIN Premium 200-202	0	9999999999999
325	025925	de: Knopf für Zweitluft D10x10 elox. KSN/ZHN	0	9999999999999
330	056780	Smoke hole cover (Ø=220mm) for ZHN,KSN,KSL,VestoWIN Klassik 170-220	0	9999999999999
340	081094	de: Kurbel für Hebevorrichtung für ZHN,KSN KSN192	0	9999999999999
350	085146	Crank for vibration device and grate lifting equipment for KSN,ZHN,VestoWIN Klassik 170-220	0	9999999999999
355	081043	de: Lagerbock für Rüttelachse für KSN,ZHN180/182,210/212	0	9999999999999
357	072362	de: Luftklappe für Feuerungsregler (191x82x0,75) für KSL,ZHL KSL317 ZHN,KSN150/160/200	0	9999999999999
360	072230	Wall support for ZHN16,KSN160/200/150, VestoWIN Klassik 170	0	9999999999999
370	063579	de: Mittelblende weiß für KSN 160/200/150	0	9999999999999

Item no.	Article no.	Description	Serialnumber from	Serialnumber t
370	081450	de: Mittelblende braun für KSN 160/200/150	0	9999999999999
390	004065	KSN809 Knurled button for ZHN,KSN,VestoWIN Klassik 170-220, VestoWIN Premium 200-202, EasyWIN Klassik/Premium 180	0	9999999999999
400	004014	KSN095 241 5/4“-1“ reduction nipple, black for KSN,ZHN,VestoWIN Klassik 170-220, VestoWIN Premium 200-202	0	9999999999999
410	000280	KSL194 Cleaning brush (680x80/57x40) for FKU,ZHN,KSN,ZHL,KS,FKX,VestoWIN Klassik 170-220, VestoWIN Premium 200-202	0	9999999999999
420	072192	Scratcher	0	9999999999999
430	082309	de: Ring für Rohrstutzen weiß für KSN 160/200/150 KSN153	0	9999999999999
430	082317	de: Ring für Rohrstutzen braun für KSN 160/200/150	0	9999999999999
450	086681	KSN050 Flue outlet with throttle flap (Ø=130) T for KSN160/200/150, VestoWIn Klassik 170	0	9999999999999
460	072249	KSL051 Smoke pipe (Ø=130mm) for KSL15/20,ZHN16,KSN160/200/150, VestoWIN Premium 170	0	9999999999999
470	080292	KSN019 Grate support complete for ZHN,KSN160/200/150, VestoWIN Premium 200-202, VestoWIN Klassik 170	0	9999999999999
480	080861	de: Rüttelachse (D16x133) KSN,ZHN KSN0051	0	9999999999999
490	004111	de: Rüttelrost (1-322-04111) KSN160/210/250	0	9999999999999
505	008885	Locking pin, black Nr: 00910-000-000 FKN088, HMX,NBL,E/SKX,FKX	0	9999999999999
510	081612	KSN054 Protective plate for extraction of flue gas for KSN150/160/200, VestoWIN Klassik 170	0	9999999999999
520	075183	de: Seitenwand links weiß kpl. KSN,ZHN	0	9999999999999
520	082147	de: Seitenwand links braun KSN/ZHN	0	9999999999999
540	075191	de: Seitenwand rechts weiß kpl. KSN,ZHN	0	9999999999999
540	082163	de: Seitenwand rechts braun KSN,ZHN	0	9999999999999
560	086673	de: Sockel für KSN 160/200/150	0	9999999999999
570	060558	Nut for lifting equipment rear for ZHN210/212,KSN160/200/150,VestoWIN Klassik 170, VestoWIN Premium 200-202	0	9999999999999
580	081485	Nut for lifting equipment front for ZHN210/212,KSN160/200/150,VestoWIN Klassik 170, VestoWIN Premium 200-202	0	9999999999999
590	072222	Poker (D9x750) for KSL,ZHL,ZHN,KSN,VestoWIN Klassik 170-220, VestoWIN Premium 200-202	0	9999999999999
595	082015	de: Stehrost für KSN 160/200/150, ZHN	0	9999999999999
610	004197	KSN094 WAF Plug no.290 5/4" for ZHN,KSN,Vesto WIN Klassik 170-220, VestoWIN Premium 200-202	0	9999999999999
620	005452	OK-915 Immersion sleeve (129 mm) No.55501.04 for EKX,OK/E,GWX,KSN,ZHN,OK-915,ETX,SNX,FKX,MIRA,FireWIN,VestoWIN Klassik 170-220,	0	9999999999999
630	004049	KSN027 Thermometer Z.Nr.SK 2014 IFC 52-052 KRF for ZHN,OEX,KSN,ASN,NBE,VestoWIN Premium 200-202, VestoWIN Klassik 170-220, fitting	0	9999999999999
640	010421	KSN100 Thermostat minimal 716 RU-9289 0-95 Grades for FK,GWX,KSN,ZHN,GSX,ETX,SNX,FKX,VestoWIN Klassik 170-220, VestoWIN Premium 20	0	9999999999999
650	061840	KSN022 Door catch for KSN,ZHN,PMX, VestoWIN Premium 200-202, VestoWIN Klassik 170-220	0	9999999999999
660	004413	KSN099 Union nut no.374 5/4“ for VestoWIN Premium 200-202, VestoWIN Klassik 170-220	0	9999999999999
670	080659	de: Wandabschlußleiste (502x108x1,25) KSN160/200/150/VEK170 KSN045	0	9999999999999
675	080985	de: Welle für Drosselklappe (D8x253) KSN150/160/200,ZHN16	0	9999999999999
680	004006	KSN097 Bracket no.92 3/8“ for ZHN,KSN,VestoWIN Klassik 170-220, VestoWIN Premium 200-202	0	9999999999999
700	081353	de: Zugeinhängung links für KSN160	0	9999999999999
710	081361	de: Zugeinhängung rechts für KSN160	0	9999999999999

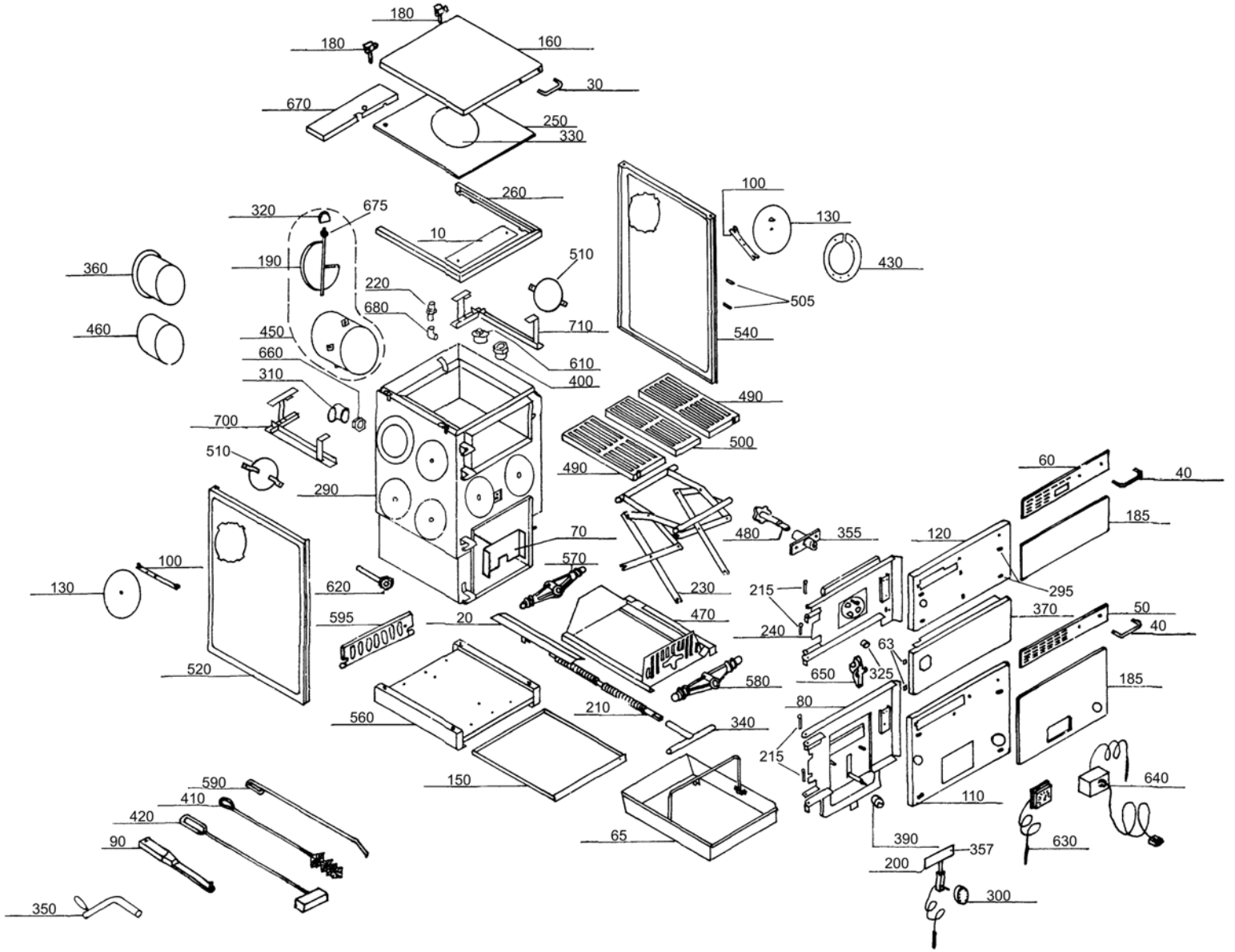
180
180
160
30
670
250
330
260
100
130
430
320
675
10
190
510
360
220
680
505
460
450
710
540
660
610
310
400
490
700
500
510
490
60
40
290
185
70
480
355
120
100
570
130
620
230
215
295
595
20
470
370
50
240
40
63
520
650
325
580
185
80
560
210
340
215
590
150
640
410
110
420
65
390
357
630
90
200
300
350

Item no.	Article no.	Description	Serialnumber from	Serialnumber
10	076236	Oven frame cover for KSL,KSN150/160/200,VestoWIN Klassik 170	0	9999999999999
20	081582	Cover for threaded spindle for KSN,ZHN,VestoWIN Klassik 170-220	0	9999999999999
30	004332	de: Alu-Griff LA 130mm,SH 45mm BR Deckel KSN,ZHN	0	9999999999999
36	025925	de: Knopf für Zweitluft D10x10 elox. KSN/ZHN	0	9999999999999
40	004340	de: Alu-Griff LA 130mm,SH 35mm BR, ZHN,KSN,ASN/E	0	9999999999999
50	004170	de: Alu-Türgriffblende eloxiert KSN150/160/200 Aschetür	0	9999999999999
60	004162	de: Alu-Türgriffblende eloxiert ZHN,KSN150/160/200 Heiztür	0	9999999999999
63	008893	de: Arretierung schwarz E/SKX,HMX,FKX,MIRA	0	9999999999999
65	080810	de: Aschelade für ZHN, KSN150/160/200	0	9999999999999
70	081507	de: Aschekippblech (254x82x3) für KSN150/160/200 KSN110	0	9999999999999
80	085308	de: Aschetür für ZHN 212,KSN150/160/200	0	9999999999999
90	073407	Operating handle for FKV,KSL,ZHL,FKN,FAX,ZHN,KSN,FKH,HMX,VestoWIN Premium 200-202, VestoWIN Klassik 170-220	0	9999999999999
100	080098	KSN0341 Fastening clip for dummy washer for HN,KSN,ASN/E, fittings cabinet Vesto 200	0	9999999999999
110	085391	de: Blende Aschetür braun ZHN 212,KSN150/160/200 KSN0121	0	9999999999999
120	088986	de: Blende Heiztür braun KSN150/160/200,ZHN212/182 KSN0141	0	9999999999999
130	081221	de: Blindscheibe weiß für ASN,KSN,ZHN KSN134	0	9999999999999
130	082198	de: Blindscheibe braun für KSN,ASN,ZHN	0	9999999999999
150	080500	Ground tray (498x416x0,9) for ZHN,KSN150/160/200, VestoWIN Premium 200-202, VestoWIN Klassik 170	0	9999999999999
160	076880	de: Deckel weiß für KSN 150/160/200,ZHN 212 Kesselseite KSN086	0	9999999999999
160	085375	de: Deckel braun KSN 150/160/200,ZHN 212 für Kesselseite	0	9999999999999
170	023922	Insulating cover support Ø20x15mm for KSN/ZHN,VestoWIN Klassik 170-220, VestoWIN Premium 200-202	0	9999999999999
180	004308	Cover hinge for KSN/ZHN, VestoWIN Klassik 170-220, VestoWIN Premium 200-202	0	9999999999999
185	503006	KSN003 Red-brown for KSN 150/160/200	0	9999999999999
185	503008	KSN006 Pearl white for KSN 150/160/200	0	9999999999999
185	503009	KSN007 Sahara-beige for KSN 150/160/200	0	9999999999999
185	503010	KSN008 brown-beige for KSN 150/160/200	0	9999999999999
185	503012	KSN010 Dark-brown for KSN 150/160/200	0	9999999999999
190	041694	Throttle flap for KSN150/160/200,ZHN160/162, VestoWIN Klassik 170	0	9999999999999
200	004030	Combustion controlling mechanism for KSN,ZHN,FKV,VestoWIN Klassik 170-220, VestoWIN Premium 200-202	0	9999999999999
210	081213	Threaded spindle (Ø20x377) for KSN,ZHN,VestoWIN Klassik 170-220, VestoWIN Premium 200-202	0	9999999999999
215	012998	de: HR-Stifte 6X41 gerändelt KSN,ZHN	0	9999999999999
220	004863	Manually operated bleeder VFR 3/8" for ZHN,KSN,GKW,NBE115,GKA/E,VestoWIN Klassik 170-220, VestoWIN Premium 200-202	0	9999999999999
230	080675	Lifting jack for ZHN,KSN160/200/150, VestoWIN Premium 200-202, VestoWIN Klassik 170	0	9999999999999
240	085359	de: Heiztür für KSN 160/200/150,ZHN 212	0	9999999999999
250	004081	Boiler hot plate (418x505x7mm) for KSN160/200/150,ZHN18/21, VestoWIN Premium 200-202, VestoWIN Klassik 170	0	9999999999999
250	004664	KSN015 Steel hot plate	0	9999999999999
260	080667	Stove frame KSN 160/200/150 and VEK170 to lot 2	0	9999999999999
290	060555	de: Kessel für KSN 160	0	9999999999999
291	060287	de: Zubehör für Kesseltausch für KSN	0	9999999999999
295	023949	de: Hutfix SCO 6820 VERZ/GE Klammern Dekor ASN,ZHN,KSN,OEX	0	9999999999999
300	004057	Knob no.30.298-002-001 for ZHN,FKV,VestoWIN Klassik 170-220, VestoWIN Premium 200-202	0	9999999999999
310	012513	Knee no.95T 5/4“ for KSN, VestoWIN Premium 200-202, VestoWIN Klassik 170-220	0	9999999999999
320	023906	Throttle flap button (D10x15) for KSN,ZHN,VestoWIN Klassik 170-220, VestoWIN Premium 200-202	0	9999999999999
325	025925	de: Knopf für Zweitluft D10x10 elox. KSN/ZHN	0	9999999999999
330	056780	Smoke hole cover (Ø=220mm) for ZHN,KSN,KSL,VestoWIN Klassik 170-220	0	9999999999999
340	081094	de: Kurbel für Hebevorrichtung für ZHN,KSN KSN192	0	9999999999999
350	085146	Crank for vibration device and grate lifting equipment for KSN,ZHN,VestoWIN Klassik 170-220	0	9999999999999
355	081043	de: Lagerbock für Rüttelachse für KSN,ZHN180/182,210/212	0	9999999999999
357	072362	de: Luftklappe für Feuerungsregler (191x82x0,75) für KSL,ZHL KSL317 ZHN,KSN150/160/200	0	9999999999999
360	072230	Wall support for ZHN16,KSN160/200/150, VestoWIN Klassik 170	0	9999999999999
370	063579	de: Mittelblende weiß für KSN 160/200/150	0	9999999999999

Item no.	Article no.	Description	Serialnumber from	Serialnumber t
370	081450	de: Mittelblende braun für KSN 160/200/150	0	9999999999999
390	004065	KSN809 Knurled button for ZHN,KSN,VestoWIN Klassik 170-220, VestoWIN Premium 200-202, EasyWIN Klassik/Premium 180	0	9999999999999
400	004014	KSN095 241 5/4“-1“ reduction nipple, black for KSN,ZHN,VestoWIN Klassik 170-220, VestoWIN Premium 200-202	0	9999999999999
410	000280	KSL194 Cleaning brush (680x80/57x40) for FKU,ZHN,KSN,ZHL,KS,FKX,VestoWIN Klassik 170-220, VestoWIN Premium 200-202	0	9999999999999
420	072192	Scratcher	0	9999999999999
430	082309	de: Ring für Rohrstutzen weiß für KSN 160/200/150 KSN153	0	9999999999999
430	082317	de: Ring für Rohrstutzen braun für KSN 160/200/150	0	9999999999999
450	086681	KSN050 Flue outlet with throttle flap (Ø=130) T for KSN160/200/150, VestoWIn Klassik 170	0	9999999999999
460	072249	KSL051 Smoke pipe (Ø=130mm) for KSL15/20,ZHN16,KSN160/200/150, VestoWIN Premium 170	0	9999999999999
470	080292	KSN019 Grate support complete for ZHN,KSN160/200/150, VestoWIN Premium 200-202, VestoWIN Klassik 170	0	9999999999999
480	080861	de: Rüttelachse (D16x133) KSN,ZHN KSN0051	0	9999999999999
490	004111	de: Rüttelrost (1-322-04111) KSN160/210/250	0	9999999999999
505	008885	Locking pin, black Nr: 00910-000-000 FKN088, HMX,NBL,E/SKX,FKX	0	9999999999999
510	081612	KSN054 Protective plate for extraction of flue gas for KSN150/160/200, VestoWIN Klassik 170	0	9999999999999
520	075183	de: Seitenwand links weiß kpl. KSN,ZHN	0	9999999999999
520	082147	de: Seitenwand links braun KSN/ZHN	0	9999999999999
540	075191	de: Seitenwand rechts weiß kpl. KSN,ZHN	0	9999999999999
540	082163	de: Seitenwand rechts braun KSN,ZHN	0	9999999999999
560	086673	de: Sockel für KSN 160/200/150	0	9999999999999
570	060558	Nut for lifting equipment rear for ZHN210/212,KSN160/200/150,VestoWIN Klassik 170, VestoWIN Premium 200-202	0	9999999999999
580	081485	Nut for lifting equipment front for ZHN210/212,KSN160/200/150,VestoWIN Klassik 170, VestoWIN Premium 200-202	0	9999999999999
590	072222	Poker (D9x750) for KSL,ZHL,ZHN,KSN,VestoWIN Klassik 170-220, VestoWIN Premium 200-202	0	9999999999999
595	082015	de: Stehrost für KSN 160/200/150, ZHN	0	9999999999999
610	004197	KSN094 WAF Plug no.290 5/4" for ZHN,KSN,Vesto WIN Klassik 170-220, VestoWIN Premium 200-202	0	9999999999999
620	005452	OK-915 Immersion sleeve (129 mm) No.55501.04 for EKX,OK/E,GWX,KSN,ZHN,OK-915,ETX,SNX,FKX,MIRA,FireWIN,VestoWIN Klassik 170-220,	0	9999999999999
630	004049	KSN027 Thermometer Z.Nr.SK 2014 IFC 52-052 KRF for ZHN,OEX,KSN,ASN,NBE,VestoWIN Premium 200-202, VestoWIN Klassik 170-220, fitting	0	9999999999999
640	010421	KSN100 Thermostat minimal 716 RU-9289 0-95 Grades for FK,GWX,KSN,ZHN,GSX,ETX,SNX,FKX,VestoWIN Klassik 170-220, VestoWIN Premium 20	0	9999999999999
650	061840	KSN022 Door catch for KSN,ZHN,PMX, VestoWIN Premium 200-202, VestoWIN Klassik 170-220	0	9999999999999
660	004413	KSN099 Union nut no.374 5/4“ for VestoWIN Premium 200-202, VestoWIN Klassik 170-220	0	9999999999999
670	080659	de: Wandabschlußleiste (502x108x1,25) KSN160/200/150/VEK170 KSN045	0	9999999999999
675	080985	de: Welle für Drosselklappe (D8x253) KSN150/160/200,ZHN16	0	9999999999999
680	004006	KSN097 Bracket no.92 3/8“ for ZHN,KSN,VestoWIN Klassik 170-220, VestoWIN Premium 200-202	0	9999999999999
700	081353	de: Zugeinhängung links für KSN160	0	9999999999999
710	081361	de: Zugeinhängung rechts für KSN160	0	9999999999999

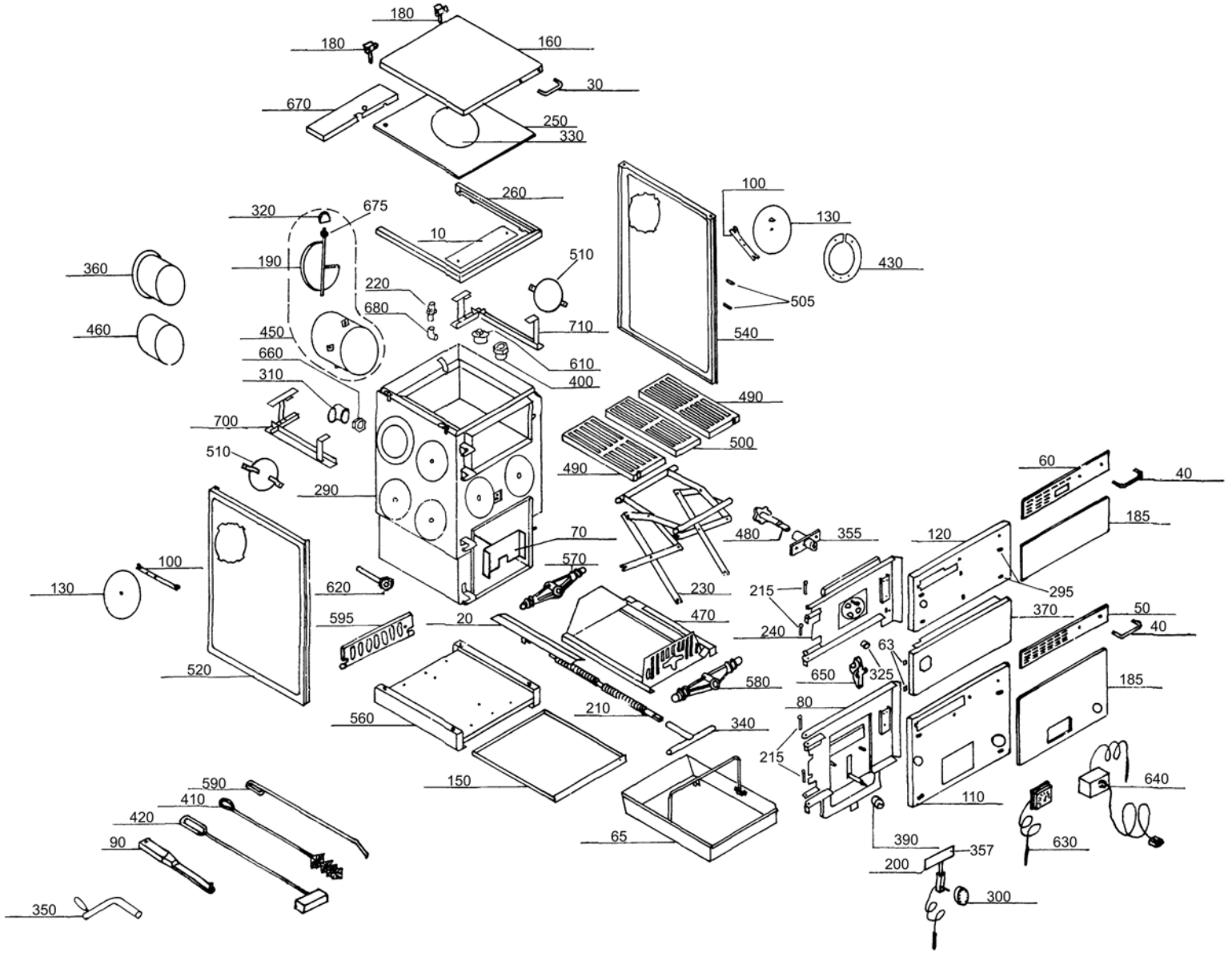
180
180
160
30
670
250
330
260
100
130
430
320
675
10
190
510
360
220
680
505
460
450
710
540
660
610
310
400
490
700
500
510
490
60
40
290
185
70
480
355
120
100
570
130
620
230
215
295
595
20
470
370
50
40
240
63
520
650
325
580
185
80
560
210
340
215
590
150
640
410
110
420
65
390
357
630
90
200
300
350

Item no.	Article no.	Description	Serialnumber from	Serialnumber
10	076236	Oven frame cover for KSL,KSN150/160/200,VestoWIN Klassik 170	0	9999999999999
20	081582	Cover for threaded spindle for KSN,ZHN,VestoWIN Klassik 170-220	0	9999999999999
30	004332	de: Alu-Griff LA 130mm,SH 45mm BR Deckel KSN,ZHN	0	9999999999999
36	025925	de: Knopf für Zweitluft D10x10 elox. KSN/ZHN	0	9999999999999
40	004340	de: Alu-Griff LA 130mm,SH 35mm BR, ZHN,KSN,ASN/E	0	9999999999999
50	004170	de: Alu-Türgriffblende eloxiert KSN150/160/200 Aschetür	0	9999999999999
60	004162	de: Alu-Türgriffblende eloxiert ZHN,KSN150/160/200 Heiztür	0	9999999999999
63	008893	de: Arretierung schwarz E/SKX,HMX,FKX,MIRA	0	9999999999999
65	080810	de: Aschelade für ZHN, KSN150/160/200	0	9999999999999
70	081507	de: Aschekippblech (254x82x3) für KSN150/160/200 KSN110	0	9999999999999
80	085308	de: Aschetür für ZHN 212,KSN150/160/200	0	9999999999999
90	073407	Operating handle for FKV,KSL,ZHL,FKN,FAX,ZHN,KSN,FKH,HMX,VestoWIN Premium 200-202, VestoWIN Klassik 170-220	0	9999999999999
100	080098	KSN0341 Fastening clip for dummy washer for HN,KSN,ASN/E, fittings cabinet Vesto 200	0	9999999999999
110	085391	de: Blende Aschetür braun ZHN 212,KSN150/160/200 KSN0121	0	9999999999999
120	088986	de: Blende Heiztür braun KSN150/160/200,ZHN212/182 KSN0141	0	9999999999999
130	081221	de: Blindscheibe weiß für ASN,KSN,ZHN KSN134	0	9999999999999
130	082198	de: Blindscheibe braun für KSN,ASN,ZHN	0	9999999999999
150	080500	Ground tray (498x416x0,9) for ZHN,KSN150/160/200, VestoWIN Premium 200-202, VestoWIN Klassik 170	0	9999999999999
160	076880	de: Deckel weiß für KSN 150/160/200,ZHN 212 Kesselseite KSN086	0	9999999999999
160	085375	de: Deckel braun KSN 150/160/200,ZHN 212 für Kesselseite	0	9999999999999
170	023922	Insulating cover support Ø20x15mm for KSN/ZHN,VestoWIN Klassik 170-220, VestoWIN Premium 200-202	0	9999999999999
180	004308	Cover hinge for KSN/ZHN, VestoWIN Klassik 170-220, VestoWIN Premium 200-202	0	9999999999999
185	503006	KSN003 Red-brown for KSN 150/160/200	0	9999999999999
185	503008	KSN006 Pearl white for KSN 150/160/200	0	9999999999999
185	503009	KSN007 Sahara-beige for KSN 150/160/200	0	9999999999999
185	503010	KSN008 brown-beige for KSN 150/160/200	0	9999999999999
185	503012	KSN010 Dark-brown for KSN 150/160/200	0	9999999999999
190	041694	Throttle flap for KSN150/160/200,ZHN160/162, VestoWIN Klassik 170	0	9999999999999
200	004030	Combustion controlling mechanism for KSN,ZHN,FKV,VestoWIN Klassik 170-220, VestoWIN Premium 200-202	0	9999999999999
210	081213	Threaded spindle (Ø20x377) for KSN,ZHN,VestoWIN Klassik 170-220, VestoWIN Premium 200-202	0	9999999999999
215	012998	de: HR-Stifte 6X41 gerändelt KSN,ZHN	0	9999999999999
220	004863	Manually operated bleeder VFR 3/8" for ZHN,KSN,GKW,NBE115,GKA/E,VestoWIN Klassik 170-220, VestoWIN Premium 200-202	0	9999999999999
230	080675	Lifting jack for ZHN,KSN160/200/150, VestoWIN Premium 200-202, VestoWIN Klassik 170	0	9999999999999
240	085359	de: Heiztür für KSN 160/200/150,ZHN 212	0	9999999999999
250	004081	Boiler hot plate (418x505x7mm) for KSN160/200/150,ZHN18/21, VestoWIN Premium 200-202, VestoWIN Klassik 170	0	9999999999999
250	004664	KSN015 Steel hot plate	0	9999999999999
260	080667	Stove frame KSN 160/200/150 and VEK170 to lot 2	0	9999999999999
290	060285	de: Kessel KSN 200/150	0	9999999999999
291	060287	de: Zubehör für Kesseltausch für KSN	0	9999999999999
295	023949	de: Hutfix SCO 6820 VERZ/GE Klammern Dekor ASN,ZHN,KSN,OEX	0	9999999999999
300	004057	Knob no.30.298-002-001 for ZHN,FKV,VestoWIN Klassik 170-220, VestoWIN Premium 200-202	0	9999999999999
310	012513	Knee no.95T 5/4“ for KSN, VestoWIN Premium 200-202, VestoWIN Klassik 170-220	0	9999999999999
320	023906	Throttle flap button (D10x15) for KSN,ZHN,VestoWIN Klassik 170-220, VestoWIN Premium 200-202	0	9999999999999
325	025925	de: Knopf für Zweitluft D10x10 elox. KSN/ZHN	0	9999999999999
330	056780	Smoke hole cover (Ø=220mm) for ZHN,KSN,KSL,VestoWIN Klassik 170-220	0	9999999999999
340	081094	de: Kurbel für Hebevorrichtung für ZHN,KSN KSN192	0	9999999999999
350	085146	Crank for vibration device and grate lifting equipment for KSN,ZHN,VestoWIN Klassik 170-220	0	9999999999999
355	081043	de: Lagerbock für Rüttelachse für KSN,ZHN180/182,210/212	0	9999999999999
357	072362	de: Luftklappe für Feuerungsregler (191x82x0,75) für KSL,ZHL KSL317 ZHN,KSN150/160/200	0	9999999999999
360	072230	Wall support for ZHN16,KSN160/200/150, VestoWIN Klassik 170	0	9999999999999
370	063579	de: Mittelblende weiß für KSN 160/200/150	0	9999999999999

Item no.	Article no.	Description	Serialnumber from	Serialnumber t
370	081450	de: Mittelblende braun für KSN 160/200/150	0	9999999999999
390	004065	KSN809 Knurled button for ZHN,KSN,VestoWIN Klassik 170-220, VestoWIN Premium 200-202, EasyWIN Klassik/Premium 180	0	9999999999999
400	004014	KSN095 241 5/4“-1“ reduction nipple, black for KSN,ZHN,VestoWIN Klassik 170-220, VestoWIN Premium 200-202	0	9999999999999
410	000280	KSL194 Cleaning brush (680x80/57x40) for FKU,ZHN,KSN,ZHL,KS,FKX,VestoWIN Klassik 170-220, VestoWIN Premium 200-202	0	9999999999999
420	072192	Scratcher	0	9999999999999
430	082309	de: Ring für Rohrstutzen weiß für KSN 160/200/150 KSN153	0	9999999999999
430	082317	de: Ring für Rohrstutzen braun für KSN 160/200/150	0	9999999999999
450	086681	KSN050 Flue outlet with throttle flap (Ø=130) T for KSN160/200/150, VestoWIn Klassik 170	0	9999999999999
460	072249	KSL051 Smoke pipe (Ø=130mm) for KSL15/20,ZHN16,KSN160/200/150, VestoWIN Premium 170	0	9999999999999
470	080292	KSN019 Grate support complete for ZHN,KSN160/200/150, VestoWIN Premium 200-202, VestoWIN Klassik 170	0	9999999999999
480	080861	de: Rüttelachse (D16x133) KSN,ZHN KSN0051	0	9999999999999
490	004138	de: Rüttelrost (Mod.1-322-261) ZHN18/21,KSN150/200	0	9999999999999
505	008885	Locking pin, black Nr: 00910-000-000 FKN088, HMX,NBL,E/SKX,FKX	0	9999999999999
510	081612	KSN054 Protective plate for extraction of flue gas for KSN150/160/200, VestoWIN Klassik 170	0	9999999999999
520	075183	de: Seitenwand links weiß kpl. KSN,ZHN	0	9999999999999
520	082147	de: Seitenwand links braun KSN/ZHN	0	9999999999999
540	075191	de: Seitenwand rechts weiß kpl. KSN,ZHN	0	9999999999999
540	082163	de: Seitenwand rechts braun KSN,ZHN	0	9999999999999
560	086673	de: Sockel für KSN 160/200/150	0	9999999999999
570	060558	Nut for lifting equipment rear for ZHN210/212,KSN160/200/150,VestoWIN Klassik 170, VestoWIN Premium 200-202	0	9999999999999
580	081485	Nut for lifting equipment front for ZHN210/212,KSN160/200/150,VestoWIN Klassik 170, VestoWIN Premium 200-202	0	9999999999999
590	072222	Poker (D9x750) for KSL,ZHL,ZHN,KSN,VestoWIN Klassik 170-220, VestoWIN Premium 200-202	0	9999999999999
595	082015	de: Stehrost für KSN 160/200/150, ZHN	0	9999999999999
610	004197	KSN094 WAF Plug no.290 5/4" for ZHN,KSN,Vesto WIN Klassik 170-220, VestoWIN Premium 200-202	0	9999999999999
620	005452	OK-915 Immersion sleeve (129 mm) No.55501.04 for EKX,OK/E,GWX,KSN,ZHN,OK-915,ETX,SNX,FKX,MIRA,FireWIN,VestoWIN Klassik 170-220,	0	9999999999999
630	004049	KSN027 Thermometer Z.Nr.SK 2014 IFC 52-052 KRF for ZHN,OEX,KSN,ASN,NBE,VestoWIN Premium 200-202, VestoWIN Klassik 170-220, fitting	0	9999999999999
640	010421	KSN100 Thermostat minimal 716 RU-9289 0-95 Grades for FK,GWX,KSN,ZHN,GSX,ETX,SNX,FKX,VestoWIN Klassik 170-220, VestoWIN Premium 20	0	9999999999999
650	061840	KSN022 Door catch for KSN,ZHN,PMX, VestoWIN Premium 200-202, VestoWIN Klassik 170-220	0	9999999999999
660	004413	KSN099 Union nut no.374 5/4“ for VestoWIN Premium 200-202, VestoWIN Klassik 170-220	0	9999999999999
670	080659	de: Wandabschlußleiste (502x108x1,25) KSN160/200/150/VEK170 KSN045	0	9999999999999
675	080985	de: Welle für Drosselklappe (D8x253) KSN150/160/200,ZHN16	0	9999999999999
680	004006	KSN097 Bracket no.92 3/8“ for ZHN,KSN,VestoWIN Klassik 170-220, VestoWIN Premium 200-202	0	9999999999999
700	081299	de: Zugeinhängung links für KSN 200/150 KSN0551	0	9999999999999
710	081302	de: Zugeinhängung rechts für KSN 200/150 KSN0561	0	9999999999999

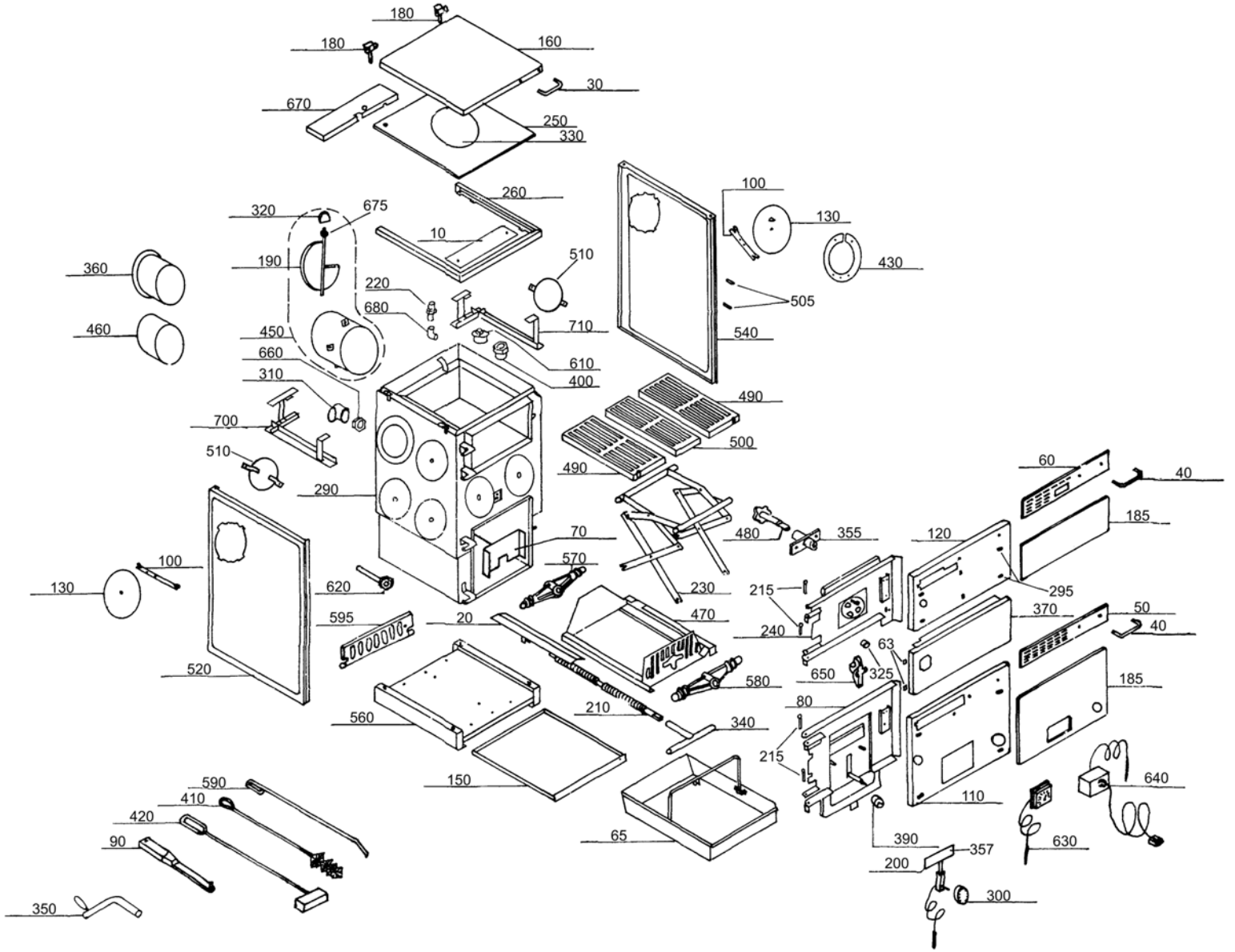
180
180
160
30
670
250
330
260
100
130
430
320
675
10
190
510
360
220
680
505
460
450
710
540
660
610
310
400
490
700
500
510
490
60
40
290
185
70
480
355
120
570
100
130
620
230
215
295
595
20
470
370
50
40
240
63
520
650
325
580
185
80
560
210
340
215
590
150
640
410
110
420
65
390
357
630
90
200
300
350

Item no.	Article no.	Description	Serialnumber from	Serialnumber
10	076236	Oven frame cover for KSL,KSN150/160/200,VestoWIN Klassik 170	0	9999999999999
20	081582	Cover for threaded spindle for KSN,ZHN,VestoWIN Klassik 170-220	0	9999999999999
30	004332	de: Alu-Griff LA 130mm,SH 45mm BR Deckel KSN,ZHN	0	9999999999999
36	025925	de: Knopf für Zweitluft D10x10 elox. KSN/ZHN	0	9999999999999
40	004340	de: Alu-Griff LA 130mm,SH 35mm BR, ZHN,KSN,ASN/E	0	9999999999999
50	004170	de: Alu-Türgriffblende eloxiert KSN150/160/200 Aschetür	0	9999999999999
60	004162	de: Alu-Türgriffblende eloxiert ZHN,KSN150/160/200 Heiztür	0	9999999999999
63	008893	de: Arretierung schwarz E/SKX,HMX,FKX,MIRA	0	9999999999999
65	080810	de: Aschelade für ZHN, KSN150/160/200	0	9999999999999
70	081507	de: Aschekippblech (254x82x3) für KSN150/160/200 KSN110	0	9999999999999
80	085308	de: Aschetür für ZHN 212,KSN150/160/200	0	9999999999999
90	073407	Operating handle for FKV,KSL,ZHL,FKN,FAX,ZHN,KSN,FKH,HMX,VestoWIN Premium 200-202, VestoWIN Klassik 170-220	0	9999999999999
100	080098	KSN0341 Fastening clip for dummy washer for HN,KSN,ASN/E, fittings cabinet Vesto 200	0	9999999999999
110	085391	de: Blende Aschetür braun ZHN 212,KSN150/160/200 KSN0121	0	9999999999999
120	088986	de: Blende Heiztür braun KSN150/160/200,ZHN212/182 KSN0141	0	9999999999999
130	081221	de: Blindscheibe weiß für ASN,KSN,ZHN KSN134	0	9999999999999
130	082198	de: Blindscheibe braun für KSN,ASN,ZHN	0	9999999999999
150	080500	Ground tray (498x416x0,9) for ZHN,KSN150/160/200, VestoWIN Premium 200-202, VestoWIN Klassik 170	0	9999999999999
160	076880	de: Deckel weiß für KSN 150/160/200,ZHN 212 Kesselseite KSN086	0	9999999999999
160	085375	de: Deckel braun KSN 150/160/200,ZHN 212 für Kesselseite	0	9999999999999
170	023922	Insulating cover support Ø20x15mm for KSN/ZHN,VestoWIN Klassik 170-220, VestoWIN Premium 200-202	0	9999999999999
180	004308	Cover hinge for KSN/ZHN, VestoWIN Klassik 170-220, VestoWIN Premium 200-202	0	9999999999999
185	503006	KSN003 Red-brown for KSN 150/160/200	0	9999999999999
185	503008	KSN006 Pearl white for KSN 150/160/200	0	9999999999999
185	503009	KSN007 Sahara-beige for KSN 150/160/200	0	9999999999999
185	503010	KSN008 brown-beige for KSN 150/160/200	0	9999999999999
185	503012	KSN010 Dark-brown for KSN 150/160/200	0	9999999999999
190	041694	Throttle flap for KSN150/160/200,ZHN160/162, VestoWIN Klassik 170	0	9999999999999
200	004030	Combustion controlling mechanism for KSN,ZHN,FKV,VestoWIN Klassik 170-220, VestoWIN Premium 200-202	0	9999999999999
210	081213	Threaded spindle (Ø20x377) for KSN,ZHN,VestoWIN Klassik 170-220, VestoWIN Premium 200-202	0	9999999999999
215	012998	de: HR-Stifte 6X41 gerändelt KSN,ZHN	0	9999999999999
220	004863	Manually operated bleeder VFR 3/8" for ZHN,KSN,GKW,NBE115,GKA/E,VestoWIN Klassik 170-220, VestoWIN Premium 200-202	0	9999999999999
230	080675	Lifting jack for ZHN,KSN160/200/150, VestoWIN Premium 200-202, VestoWIN Klassik 170	0	9999999999999
240	085359	de: Heiztür für KSN 160/200/150,ZHN 212	0	9999999999999
250	004081	Boiler hot plate (418x505x7mm) for KSN160/200/150,ZHN18/21, VestoWIN Premium 200-202, VestoWIN Klassik 170	0	9999999999999
250	004664	KSN015 Steel hot plate	0	9999999999999
260	080667	Stove frame KSN 160/200/150 and VEK170 to lot 2	0	9999999999999
290	060285	de: Kessel KSN 200/150	0	9999999999999
291	060287	de: Zubehör für Kesseltausch für KSN	0	9999999999999
295	023949	de: Hutfix SCO 6820 VERZ/GE Klammern Dekor ASN,ZHN,KSN,OEX	0	9999999999999
300	004057	Knob no.30.298-002-001 for ZHN,FKV,VestoWIN Klassik 170-220, VestoWIN Premium 200-202	0	9999999999999
310	012513	Knee no.95T 5/4“ for KSN, VestoWIN Premium 200-202, VestoWIN Klassik 170-220	0	9999999999999
320	023906	Throttle flap button (D10x15) for KSN,ZHN,VestoWIN Klassik 170-220, VestoWIN Premium 200-202	0	9999999999999
325	025925	de: Knopf für Zweitluft D10x10 elox. KSN/ZHN	0	9999999999999
330	056780	Smoke hole cover (Ø=220mm) for ZHN,KSN,KSL,VestoWIN Klassik 170-220	0	9999999999999
340	081094	de: Kurbel für Hebevorrichtung für ZHN,KSN KSN192	0	9999999999999
350	085146	Crank for vibration device and grate lifting equipment for KSN,ZHN,VestoWIN Klassik 170-220	0	9999999999999
355	081043	de: Lagerbock für Rüttelachse für KSN,ZHN180/182,210/212	0	9999999999999
357	072362	de: Luftklappe für Feuerungsregler (191x82x0,75) für KSL,ZHL KSL317 ZHN,KSN150/160/200	0	9999999999999
360	072230	Wall support for ZHN16,KSN160/200/150, VestoWIN Klassik 170	0	9999999999999
370	063579	de: Mittelblende weiß für KSN 160/200/150	0	9999999999999

Item no.	Article no.	Description	Serialnumber from	Serialnumber t
370	081450	de: Mittelblende braun für KSN 160/200/150	0	9999999999999
390	004065	KSN809 Knurled button for ZHN,KSN,VestoWIN Klassik 170-220, VestoWIN Premium 200-202, EasyWIN Klassik/Premium 180	0	9999999999999
400	004014	KSN095 241 5/4“-1“ reduction nipple, black for KSN,ZHN,VestoWIN Klassik 170-220, VestoWIN Premium 200-202	0	9999999999999
410	000280	KSL194 Cleaning brush (680x80/57x40) for FKU,ZHN,KSN,ZHL,KS,FKX,VestoWIN Klassik 170-220, VestoWIN Premium 200-202	0	9999999999999
420	072192	Scratcher	0	9999999999999
430	082309	de: Ring für Rohrstutzen weiß für KSN 160/200/150 KSN153	0	9999999999999
430	082317	de: Ring für Rohrstutzen braun für KSN 160/200/150	0	9999999999999
450	086681	KSN050 Flue outlet with throttle flap (Ø=130) T for KSN160/200/150, VestoWIn Klassik 170	0	9999999999999
460	072249	KSL051 Smoke pipe (Ø=130mm) for KSL15/20,ZHN16,KSN160/200/150, VestoWIN Premium 170	0	9999999999999
470	080292	KSN019 Grate support complete for ZHN,KSN160/200/150, VestoWIN Premium 200-202, VestoWIN Klassik 170	0	9999999999999
480	080861	de: Rüttelachse (D16x133) KSN,ZHN KSN0051	0	9999999999999
490	004138	de: Rüttelrost (Mod.1-322-261) ZHN18/21,KSN150/200	0	9999999999999
505	008885	Locking pin, black Nr: 00910-000-000 FKN088, HMX,NBL,E/SKX,FKX	0	9999999999999
510	081612	KSN054 Protective plate for extraction of flue gas for KSN150/160/200, VestoWIN Klassik 170	0	9999999999999
520	075183	de: Seitenwand links weiß kpl. KSN,ZHN	0	9999999999999
520	082147	de: Seitenwand links braun KSN/ZHN	0	9999999999999
540	075191	de: Seitenwand rechts weiß kpl. KSN,ZHN	0	9999999999999
540	082163	de: Seitenwand rechts braun KSN,ZHN	0	9999999999999
560	086673	de: Sockel für KSN 160/200/150	0	9999999999999
570	060558	Nut for lifting equipment rear for ZHN210/212,KSN160/200/150,VestoWIN Klassik 170, VestoWIN Premium 200-202	0	9999999999999
580	081485	Nut for lifting equipment front for ZHN210/212,KSN160/200/150,VestoWIN Klassik 170, VestoWIN Premium 200-202	0	9999999999999
590	072222	Poker (D9x750) for KSL,ZHL,ZHN,KSN,VestoWIN Klassik 170-220, VestoWIN Premium 200-202	0	9999999999999
595	082015	de: Stehrost für KSN 160/200/150, ZHN	0	9999999999999
610	004197	KSN094 WAF Plug no.290 5/4" for ZHN,KSN,Vesto WIN Klassik 170-220, VestoWIN Premium 200-202	0	9999999999999
620	005452	OK-915 Immersion sleeve (129 mm) No.55501.04 for EKX,OK/E,GWX,KSN,ZHN,OK-915,ETX,SNX,FKX,MIRA,FireWIN,VestoWIN Klassik 170-220,	0	9999999999999
630	004049	KSN027 Thermometer Z.Nr.SK 2014 IFC 52-052 KRF for ZHN,OEX,KSN,ASN,NBE,VestoWIN Premium 200-202, VestoWIN Klassik 170-220, fitting	0	9999999999999
640	010421	KSN100 Thermostat minimal 716 RU-9289 0-95 Grades for FK,GWX,KSN,ZHN,GSX,ETX,SNX,FKX,VestoWIN Klassik 170-220, VestoWIN Premium 20	0	9999999999999
650	061840	KSN022 Door catch for KSN,ZHN,PMX, VestoWIN Premium 200-202, VestoWIN Klassik 170-220	0	9999999999999
660	004413	KSN099 Union nut no.374 5/4“ for VestoWIN Premium 200-202, VestoWIN Klassik 170-220	0	9999999999999
670	080659	de: Wandabschlußleiste (502x108x1,25) KSN160/200/150/VEK170 KSN045	0	9999999999999
675	080985	de: Welle für Drosselklappe (D8x253) KSN150/160/200,ZHN16	0	9999999999999
680	004006	KSN097 Bracket no.92 3/8“ for ZHN,KSN,VestoWIN Klassik 170-220, VestoWIN Premium 200-202	0	9999999999999
700	081299	de: Zugeinhängung links für KSN 200/150 KSN0551	0	9999999999999
710	081302	de: Zugeinhängung rechts für KSN 200/150 KSN0561	0	9999999999999

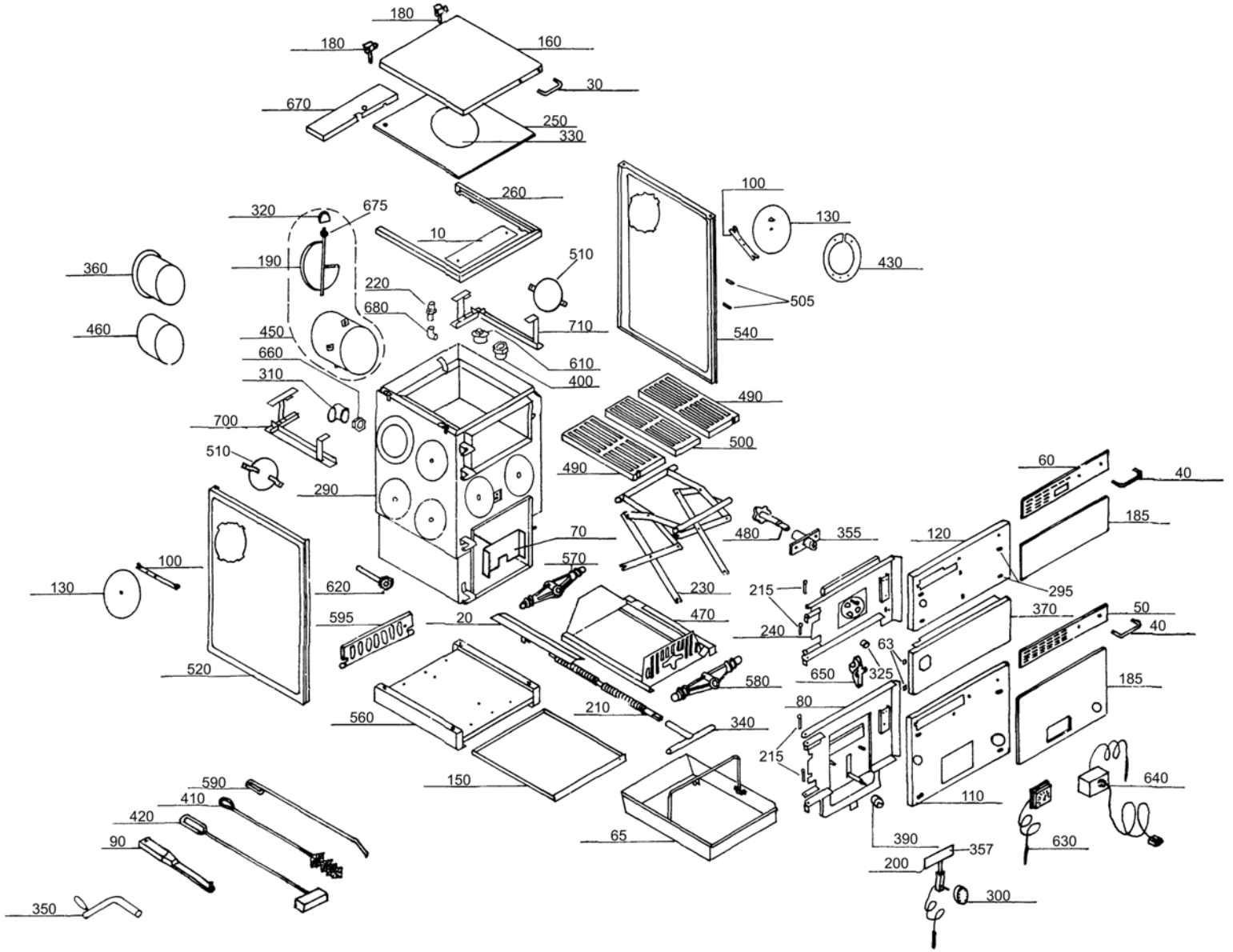
180
180
160
30
670
250
330
260
100
130
430
320
675
10
190
510
360
220
680
505
460
450
710
540
660
610
310
400
490
700
500
510
490
60
40
290
185
70
480
355
120
100
570
130
620
230
215
295
595
20
470
370
50
240
40
63
520
650
325
580
185
80
560
210
340
215
590
150
640
410
110
420
65
390
357
630
90
200
300
350

Item no.	Article no.	Description	Serialnumber from	Serialnumber t
10	076244	Oven frame cover (572x85x0,9) for KSL,KSN250,VestoWIN Klassik 220	0	9999999999999
20	081582	Cover for threaded spindle for KSN,ZHN,VestoWIN Klassik 170-220	0	9999999999999
30	004332	de: Alu-Griff LA 130mm,SH 45mm BR Deckel KSN,ZHN	0	9999999999999
36	025925	de: Knopf für Zweitluft D10x10 elox. KSN/ZHN	0	9999999999999
40	004340	de: Alu-Griff LA 130mm,SH 35mm BR, ZHN,KSN,ASN/E	0	9999999999999
50	000744	de: Alu-Türgriffblende eloxiert KSN 250 Aschetür	0	9999999999999
60	000752	de: Alu-Türgriffblende eloxiert KSN 250 Heiztür	0	9999999999999
63	008893	de: Arretierung schwarz E/SKX,HMX,FKX,MIRA	0	9999999999999
65	059145	de: Aschelade für KSN 250	0	9999999999999
70	059153	de: Aschekippblech für KSN210/250	0	9999999999999
80	085219	de: Aschetür für KSN 250/210	0	9999999999999
90	073407	Operating handle for FKV,KSL,ZHL,FKN,FAX,ZHN,KSN,FKH,HMX,VestoWIN Premium 200-202, VestoWIN Klassik 170-220	0	9999999999999
100	080098	KSN0341 Fastening clip for dummy washer for HN,KSN,ASN/E, fittings cabinet Vesto 200	0	9999999999999
110	085235	de: Blende für Aschetür braun für KSN 250	0	9999999999999
120	085227	de: Blende für Heiztür braun für KSN 250	0	9999999999999
130	081221	de: Blindscheibe weiß für ASN,KSN,ZHN KSN134	0	9999999999999
130	082198	de: Blindscheibe braun für KSN,ASN,ZHN	0	9999999999999
150	059102	Ground protection tray for KSN250, VestoWIN Klassik 220	0	9999999999999
160	085154	de: Deckel weiß für KSN 210/250 KSN089	0	9999999999999
160	086444	de: Deckel braun für KSN 210/250 KSN080	0	9999999999999
170	023922	Insulating cover support Ø20x15mm for KSN/ZHN,VestoWIN Klassik 170-220, VestoWIN Premium 200-202	0	9999999999999
180	004308	Cover hinge for KSN/ZHN, VestoWIN Klassik 170-220, VestoWIN Premium 200-202	0	9999999999999
185	503026	de: KSN053 Dekor rotbraun zu KSN 210/250	0	9999999999999
185	503028	KSN056 Pearl white for KSN 210/250	0	9999999999999
185	503029	KSN057 Dekor sahara-beige zu KSN 210/250	0	9999999999999
185	503030	KSN058 Dekor braun-beige zu KSN 210/250	0	9999999999999
185	503031	KSN060 Dekor dunkelbraun zu KSN 210/250	0	9999999999999
190	041693	Throttle flap for KSN210/250,ZHN18/21,VestoWIN Klassik 220	0	9999999999999
200	004030	Combustion controlling mechanism for KSN,ZHN,FKV,VestoWIN Klassik 170-220, VestoWIN Premium 200-202	0	9999999999999
210	081213	Threaded spindle (Ø20x377) for KSN,ZHN,VestoWIN Klassik 170-220, VestoWIN Premium 200-202	0	9999999999999
215	012998	de: HR-Stifte 6X41 gerändelt KSN,ZHN	0	9999999999999
220	004863	Manually operated bleeder VFR 3/8" for ZHN,KSN,GKW,NBE115,GKA/E,VestoWIN Klassik 170-220, VestoWIN Premium 200-202	0	9999999999999
230	059366	Lifting jack for KSN250, VestoWIN Klassik 220	0	9999999999999
240	085170	de: Heiztür für KSN 250	0	9999999999999
250	001139	Hot plate for KSN210/250, VestoWIN Klassik 220	0	9999999999999
250	004656	KSN017 Steel hot plate	0	9999999999999
260	059234	Stove frame KSN250,VEK220 to lot 4	0	9999999999999
290	060561	de: Kessel für KSN 250/210	0	9999999999999
291	060287	de: Zubehör für Kesseltausch für KSN	0	9999999999999
295	023949	de: Hutfix SCO 6820 VERZ/GE Klammern Dekor ASN,ZHN,KSN,OEX	0	9999999999999
300	004057	Knob no.30.298-002-001 for ZHN,FKV,VestoWIN Klassik 170-220, VestoWIN Premium 200-202	0	9999999999999
310	012513	Knee no.95T 5/4“ for KSN, VestoWIN Premium 200-202, VestoWIN Klassik 170-220	0	9999999999999
320	023906	Throttle flap button (D10x15) for KSN,ZHN,VestoWIN Klassik 170-220, VestoWIN Premium 200-202	0	9999999999999
325	025925	de: Knopf für Zweitluft D10x10 elox. KSN/ZHN	0	9999999999999
330	056780	Smoke hole cover (Ø=220mm) for ZHN,KSN,KSL,VestoWIN Klassik 170-220	0	9999999999999
340	081094	de: Kurbel für Hebevorrichtung für ZHN,KSN KSN192	0	9999999999999
350	085146	Crank for vibration device and grate lifting equipment for KSN,ZHN,VestoWIN Klassik 170-220	0	9999999999999
355	081043	de: Lagerbock für Rüttelachse für KSN,ZHN180/182,210/212	0	9999999999999
357	086398	de: Luftklappe für KSN210/250 179X79X0,75	0	9999999999999
360	072230	Wall support for ZHN16,KSN160/200/150, VestoWIN Klassik 170	0	9999999999999
370	059080	de: Mittelblende braun für KSN 210/250	0	9999999999999

Item no.	Article no.	Description	Serialnumber from	Serialnumber t
370	067290	de: Mittelblende weiß für KSN 250 KSN088	0	9999999999999
390	004065	KSN809 Knurled button for ZHN,KSN,VestoWIN Klassik 170-220, VestoWIN Premium 200-202, EasyWIN Klassik/Premium 180	0	9999999999999
400	004014	KSN095 241 5/4“-1“ reduction nipple, black for KSN,ZHN,VestoWIN Klassik 170-220, VestoWIN Premium 200-202	0	9999999999999
410	000280	KSL194 Cleaning brush (680x80/57x40) for FKU,ZHN,KSN,ZHL,KS,FKX,VestoWIN Klassik 170-220, VestoWIN Premium 200-202	0	9999999999999
420	072192	Scratcher	0	9999999999999
430	067253	de: Ring für Rohrstutzen weiß für ZHN,KSN250 ZHN054	0	9999999999999
430	067938	de: Ring für Rohrstutzen braun für ZHN,KSN250 ZHN254	0	9999999999999
450	085200	Flue outlet with throttle flap for KSN 210/250,VestoWIN Klassik 220	0	9999999999999
460	075744	KSL411 Smoke pipe for KSL25,ZHL,ZHN21/18,KSN250,VestoWIN Klassik 220	0	9999999999999
470	059323	KSN919 Grate support for KSN250,VestoWIN Klassik 220	0	9999999999999
480	080861	de: Rüttelachse (D16x133) KSN,ZHN KSN0051	0	9999999999999
490	004111	de: Rüttelrost (1-322-04111) KSN160/210/250	0	9999999999999
500	000809	de: Rüttelrost Mittelstück (1-323-00809) KSN 250	0	9999999999999
505	008885	Locking pin, black Nr: 00910-000-000 FKN088, HMX,NBL,E/SKX,FKX	0	9999999999999
510	059609	KSN954 Protective plate for extraction of flue gas for KSN210/250,VestoWIN Klassik 220	0	9999999999999
520	075183	de: Seitenwand links weiß kpl. KSN,ZHN	0	9999999999999
520	082147	de: Seitenwand links braun KSN/ZHN	0	9999999999999
540	075191	de: Seitenwand rechts weiß kpl. KSN,ZHN	0	9999999999999
540	082163	de: Seitenwand rechts braun KSN,ZHN	0	9999999999999
560	085189	de: Sockel für KSN 250	0	9999999999999
570	060562	Nut for lifting equipment rear for KSN 250, VestoWIN Klassik 220	0	9999999999999
580	059730	Nut for lifting equipment front for KSN250, VestoWIN Klassik 220	0	9999999999999
590	072222	Poker (D9x750) for KSL,ZHL,ZHN,KSN,VestoWIN Klassik 170-220, VestoWIN Premium 200-202	0	9999999999999
595	059579	de: Stehrost für KSN 210/250	0	9999999999999
610	004197	KSN094 WAF Plug no.290 5/4" for ZHN,KSN,Vesto WIN Klassik 170-220, VestoWIN Premium 200-202	0	9999999999999
620	005452	OK-915 Immersion sleeve (129 mm) No.55501.04 for EKX,OK/E,GWX,KSN,ZHN,OK-915,ETX,SNX,FKX,MIRA,FireWIN,VestoWIN Klassik 170-220,	0	9999999999999
630	004049	KSN027 Thermometer Z.Nr.SK 2014 IFC 52-052 KRF for ZHN,OEX,KSN,ASN,NBE,VestoWIN Premium 200-202, VestoWIN Klassik 170-220, fitting	0	9999999999999
640	010421	KSN100 Thermostat minimal 716 RU-9289 0-95 Grades for FK,GWX,KSN,ZHN,GSX,ETX,SNX,FKX,VestoWIN Klassik 170-220, VestoWIN Premium 20	0	9999999999999
650	061840	KSN022 Door catch for KSN,ZHN,PMX, VestoWIN Premium 200-202, VestoWIN Klassik 170-220	0	9999999999999
660	004413	KSN099 Union nut no.374 5/4“ for VestoWIN Premium 200-202, VestoWIN Klassik 170-220	0	9999999999999
670	059242	KSN945, VEK22 Wall end plate for KSN250,VestoWIN Klassik 170-220	0	9999999999999
675	066567	KSN9492 Throttle flap shaft for KSN210/250,ZHN18/21,VestoWIN Klassik 170-220, VestoWIN Premium 200-202	0	9999999999999
680	004006	KSN097 Bracket no.92 3/8“ for ZHN,KSN,VestoWIN Klassik 170-220, VestoWIN Premium 200-202	0	9999999999999
700	059528	de: Zugeinhängung links für KSN 210/250	0	9999999999999
710	059501	de: Zugeinhängung rechts für KSN 210/250	0	9999999999999

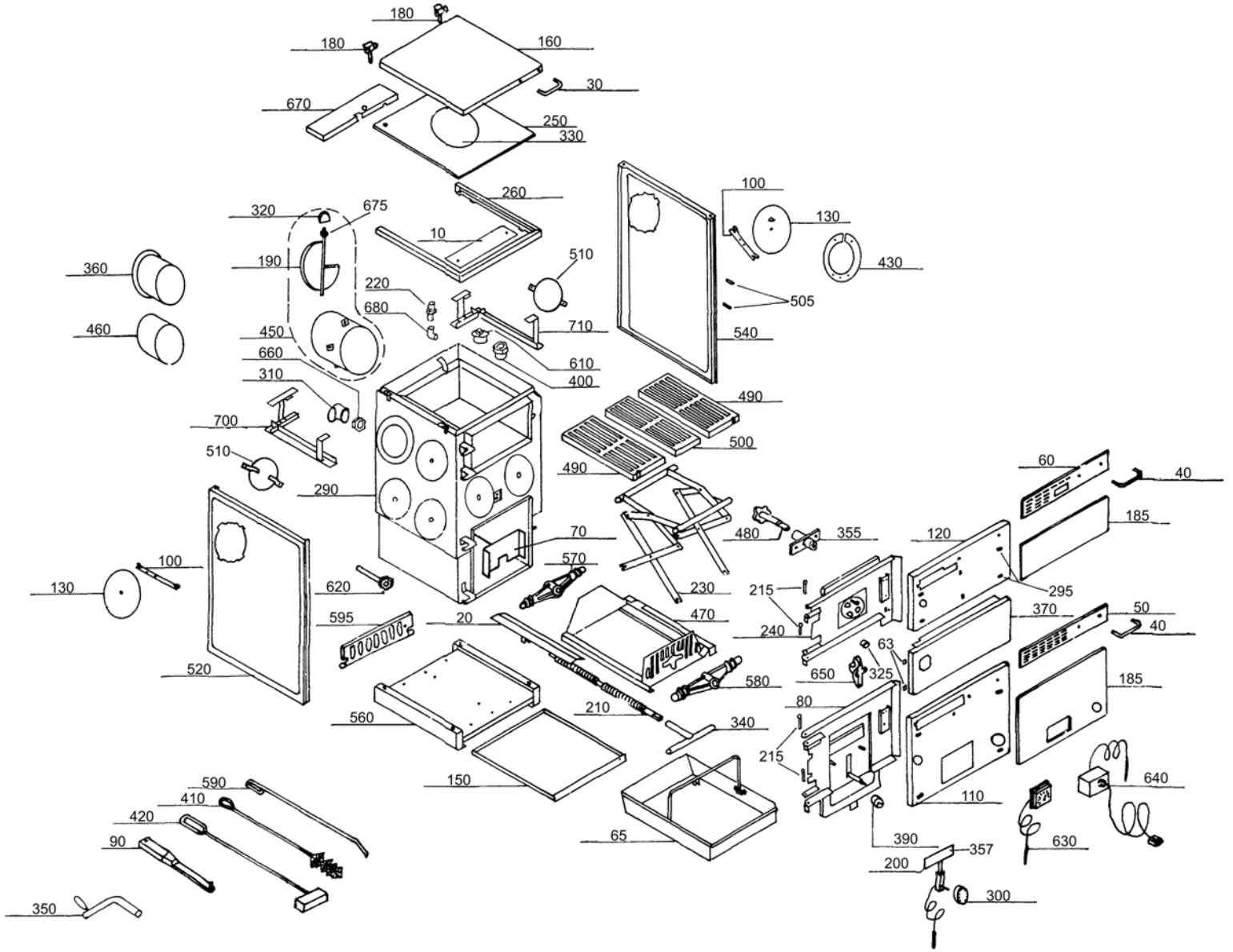
180
180
160
30
670
250
330
260
100
130
430
320
675
10
190
510
360
220
680
505
460
450
710
540
660
610
310
400
490
700
500
510
490
60
40
290
185
70
480
355
120
100
570
130
620
230
215
295
595
20
470
370
50
40
240
63
520
650
325
580
185
80
560
210
340
215
590
150
640
410
110
420
65
390
357
630
90
200
300
350

Item no.	Article no.	Description	Serialnumber from	Serialnumber
10	076244	Oven frame cover (572x85x0,9) for KSL,KSN250,VestoWIN Klassik 220	0	9999999999999
20	081582	Cover for threaded spindle for KSN,ZHN,VestoWIN Klassik 170-220	0	9999999999999
30	004332	de: Alu-Griff LA 130mm,SH 45mm BR Deckel KSN,ZHN	0	9999999999999
36	025925	de: Knopf für Zweitluft D10x10 elox. KSN/ZHN	0	9999999999999
40	004340	de: Alu-Griff LA 130mm,SH 35mm BR, ZHN,KSN,ASN/E	0	9999999999999
50	000744	de: Alu-Türgriffblende eloxiert KSN 250 Aschetür	0	9999999999999
60	000752	de: Alu-Türgriffblende eloxiert KSN 250 Heiztür	0	9999999999999
63	008893	de: Arretierung schwarz E/SKX,HMX,FKX,MIRA	0	9999999999999
65	059145	de: Aschelade für KSN 250	0	9999999999999
70	059153	de: Aschekippblech für KSN210/250	0	9999999999999
80	085219	de: Aschetür für KSN 250/210	0	9999999999999
90	073407	Operating handle for FKV,KSL,ZHL,FKN,FAX,ZHN,KSN,FKH,HMX,VestoWIN Premium 200-202, VestoWIN Klassik 170-220	0	9999999999999
100	080098	KSN0341 Fastening clip for dummy washer for HN,KSN,ASN/E, fittings cabinet Vesto 200	0	9999999999999
110	085235	de: Blende für Aschetür braun für KSN 250	0	9999999999999
120	085227	de: Blende für Heiztür braun für KSN 250	0	9999999999999
130	081221	de: Blindscheibe weiß für ASN,KSN,ZHN KSN134	0	9999999999999
130	082198	de: Blindscheibe braun für KSN,ASN,ZHN	0	9999999999999
150	059102	Ground protection tray for KSN250, VestoWIN Klassik 220	0	9999999999999
160	085154	de: Deckel weiß für KSN 210/250 KSN089	0	9999999999999
160	086444	de: Deckel braun für KSN 210/250 KSN080	0	9999999999999
170	023922	Insulating cover support Ø20x15mm for KSN/ZHN,VestoWIN Klassik 170-220, VestoWIN Premium 200-202	0	9999999999999
180	004308	Cover hinge for KSN/ZHN, VestoWIN Klassik 170-220, VestoWIN Premium 200-202	0	9999999999999
185	503026	de: KSN053 Dekor rotbraun zu KSN 210/250	0	9999999999999
185	503028	KSN056 Pearl white for KSN 210/250	0	9999999999999
185	503029	KSN057 Dekor sahara-beige zu KSN 210/250	0	9999999999999
185	503030	KSN058 Dekor braun-beige zu KSN 210/250	0	9999999999999
185	503031	KSN060 Dekor dunkelbraun zu KSN 210/250	0	9999999999999
190	041693	Throttle flap for KSN210/250,ZHN18/21,VestoWIN Klassik 220	0	9999999999999
200	004030	Combustion controlling mechanism for KSN,ZHN,FKV,VestoWIN Klassik 170-220, VestoWIN Premium 200-202	0	9999999999999
210	081213	Threaded spindle (Ø20x377) for KSN,ZHN,VestoWIN Klassik 170-220, VestoWIN Premium 200-202	0	9999999999999
215	012998	de: HR-Stifte 6X41 gerändelt KSN,ZHN	0	9999999999999
220	004863	Manually operated bleeder VFR 3/8" for ZHN,KSN,GKW,NBE115,GKA/E,VestoWIN Klassik 170-220, VestoWIN Premium 200-202	0	9999999999999
230	059366	Lifting jack for KSN250, VestoWIN Klassik 220	0	9999999999999
240	085170	de: Heiztür für KSN 250	0	9999999999999
250	001139	Hot plate for KSN210/250, VestoWIN Klassik 220	0	9999999999999
250	004656	KSN017 Steel hot plate	0	9999999999999
260	059234	Stove frame KSN250,VEK220 to lot 4	0	9999999999999
290	060561	de: Kessel für KSN 250/210	0	9999999999999
291	060287	de: Zubehör für Kesseltausch für KSN	0	9999999999999
295	023949	de: Hutfix SCO 6820 VERZ/GE Klammern Dekor ASN,ZHN,KSN,OEX	0	9999999999999
300	004057	Knob no.30.298-002-001 for ZHN,FKV,VestoWIN Klassik 170-220, VestoWIN Premium 200-202	0	9999999999999
310	012513	Knee no.95T 5/4“ for KSN, VestoWIN Premium 200-202, VestoWIN Klassik 170-220	0	9999999999999
320	023906	Throttle flap button (D10x15) for KSN,ZHN,VestoWIN Klassik 170-220, VestoWIN Premium 200-202	0	9999999999999
325	025925	de: Knopf für Zweitluft D10x10 elox. KSN/ZHN	0	9999999999999
330	056780	Smoke hole cover (Ø=220mm) for ZHN,KSN,KSL,VestoWIN Klassik 170-220	0	9999999999999
340	081094	de: Kurbel für Hebevorrichtung für ZHN,KSN KSN192	0	9999999999999
350	085146	Crank for vibration device and grate lifting equipment for KSN,ZHN,VestoWIN Klassik 170-220	0	9999999999999
355	081043	de: Lagerbock für Rüttelachse für KSN,ZHN180/182,210/212	0	9999999999999
357	086398	de: Luftklappe für KSN210/250 179X79X0,75	0	9999999999999
360	072230	Wall support for ZHN16,KSN160/200/150, VestoWIN Klassik 170	0	9999999999999
370	059080	de: Mittelblende braun für KSN 210/250	0	9999999999999

Item no.	Article no.	Description	Serialnumber from	Serialnumber t
370	067290	de: Mittelblende weiß für KSN 250 KSN088	0	9999999999999
390	004065	KSN809 Knurled button for ZHN,KSN,VestoWIN Klassik 170-220, VestoWIN Premium 200-202, EasyWIN Klassik/Premium 180	0	9999999999999
400	004014	KSN095 241 5/4“-1“ reduction nipple, black for KSN,ZHN,VestoWIN Klassik 170-220, VestoWIN Premium 200-202	0	9999999999999
410	000280	KSL194 Cleaning brush (680x80/57x40) for FKU,ZHN,KSN,ZHL,KS,FKX,VestoWIN Klassik 170-220, VestoWIN Premium 200-202	0	9999999999999
420	072192	Scratcher	0	9999999999999
430	067253	de: Ring für Rohrstutzen weiß für ZHN,KSN250 ZHN054	0	9999999999999
430	067938	de: Ring für Rohrstutzen braun für ZHN,KSN250 ZHN254	0	9999999999999
450	085200	Flue outlet with throttle flap for KSN 210/250,VestoWIN Klassik 220	0	9999999999999
460	075744	KSL411 Smoke pipe for KSL25,ZHL,ZHN21/18,KSN250,VestoWIN Klassik 220	0	9999999999999
470	059323	KSN919 Grate support for KSN250,VestoWIN Klassik 220	0	9999999999999
480	080861	de: Rüttelachse (D16x133) KSN,ZHN KSN0051	0	9999999999999
490	004111	de: Rüttelrost (1-322-04111) KSN160/210/250	0	9999999999999
500	000809	de: Rüttelrost Mittelstück (1-323-00809) KSN 250	0	9999999999999
505	008885	Locking pin, black Nr: 00910-000-000 FKN088, HMX,NBL,E/SKX,FKX	0	9999999999999
510	059609	KSN954 Protective plate for extraction of flue gas for KSN210/250,VestoWIN Klassik 220	0	9999999999999
520	075183	de: Seitenwand links weiß kpl. KSN,ZHN	0	9999999999999
520	082147	de: Seitenwand links braun KSN/ZHN	0	9999999999999
540	075191	de: Seitenwand rechts weiß kpl. KSN,ZHN	0	9999999999999
540	082163	de: Seitenwand rechts braun KSN,ZHN	0	9999999999999
560	085189	de: Sockel für KSN 250	0	9999999999999
570	060562	Nut for lifting equipment rear for KSN 250, VestoWIN Klassik 220	0	9999999999999
580	059730	Nut for lifting equipment front for KSN250, VestoWIN Klassik 220	0	9999999999999
590	072222	Poker (D9x750) for KSL,ZHL,ZHN,KSN,VestoWIN Klassik 170-220, VestoWIN Premium 200-202	0	9999999999999
595	059579	de: Stehrost für KSN 210/250	0	9999999999999
610	004197	KSN094 WAF Plug no.290 5/4" for ZHN,KSN,Vesto WIN Klassik 170-220, VestoWIN Premium 200-202	0	9999999999999
620	005452	OK-915 Immersion sleeve (129 mm) No.55501.04 for EKX,OK/E,GWX,KSN,ZHN,OK-915,ETX,SNX,FKX,MIRA,FireWIN,VestoWIN Klassik 170-220,	0	9999999999999
630	004049	KSN027 Thermometer Z.Nr.SK 2014 IFC 52-052 KRF for ZHN,OEX,KSN,ASN,NBE,VestoWIN Premium 200-202, VestoWIN Klassik 170-220, fitting	0	9999999999999
640	010421	KSN100 Thermostat minimal 716 RU-9289 0-95 Grades for FK,GWX,KSN,ZHN,GSX,ETX,SNX,FKX,VestoWIN Klassik 170-220, VestoWIN Premium 20	0	9999999999999
650	061840	KSN022 Door catch for KSN,ZHN,PMX, VestoWIN Premium 200-202, VestoWIN Klassik 170-220	0	9999999999999
660	004413	KSN099 Union nut no.374 5/4“ for VestoWIN Premium 200-202, VestoWIN Klassik 170-220	0	9999999999999
670	059242	KSN945, VEK22 Wall end plate for KSN250,VestoWIN Klassik 170-220	0	9999999999999
675	066567	KSN9492 Throttle flap shaft for KSN210/250,ZHN18/21,VestoWIN Klassik 170-220, VestoWIN Premium 200-202	0	9999999999999
680	004006	KSN097 Bracket no.92 3/8“ for ZHN,KSN,VestoWIN Klassik 170-220, VestoWIN Premium 200-202	0	9999999999999
700	059528	de: Zugeinhängung links für KSN 210/250	0	9999999999999
710	059501	de: Zugeinhängung rechts für KSN 210/250	0	9999999999999

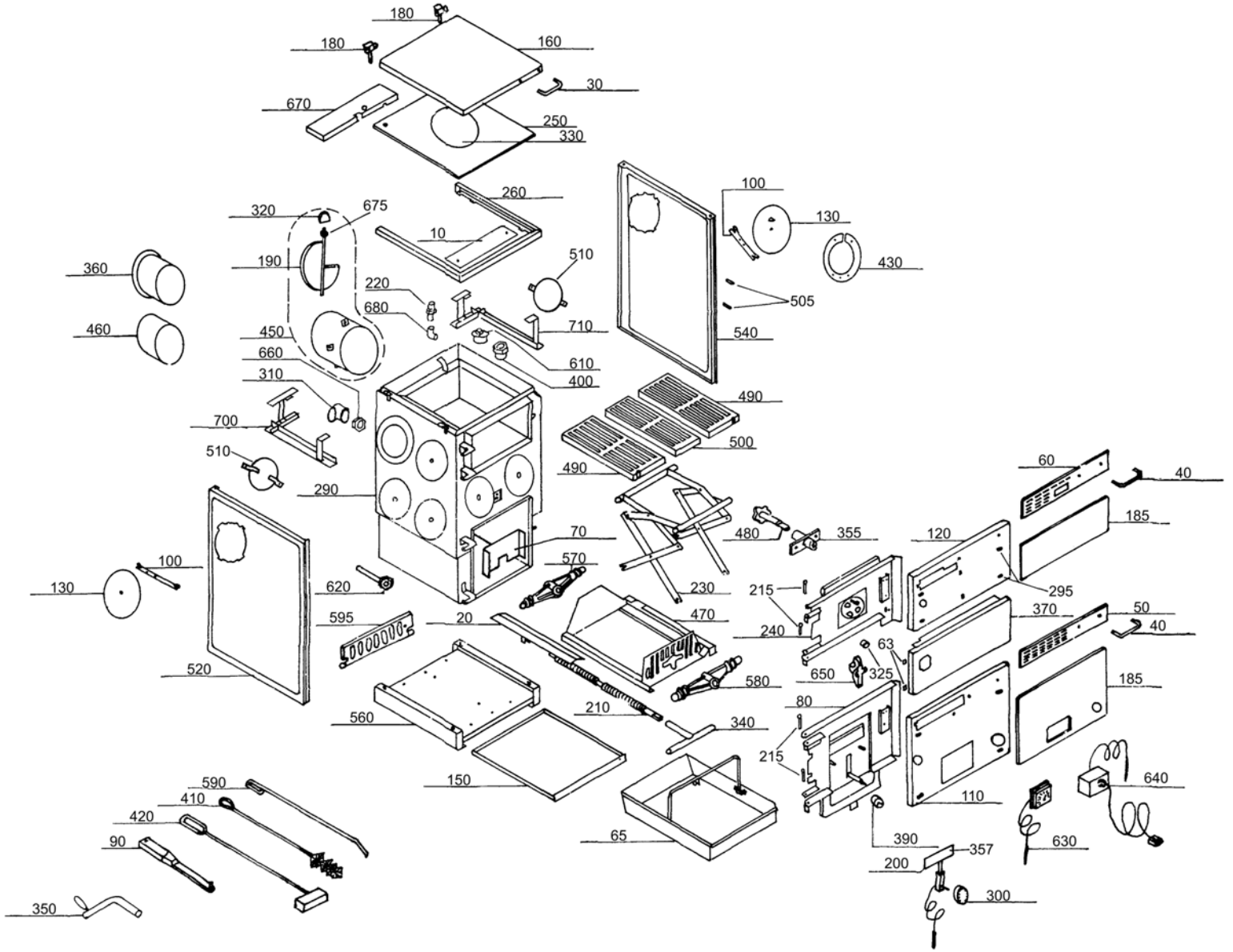
180
180
160
30
670
250
330
260
100
130
430
320
675
10
190
510
360
220
680
505
460
450
710
540
660
610
310
400
490
700
500
510
490
60
40
290
185
70
480
355
120
100
570
130
620
230
215
295
595
20
470
370
50
40
240
63
520
650
325
580
185
80
560
210
340
215
590
150
640
410
110
420
65
390
357
630
90
200
300
350

Item no.	Article no.	Description	Serialnumber from	Serialnumber t
10	076244	Oven frame cover (572x85x0,9) for KSL,KSN250,VestoWIN Klassik 220	0	9999999999999
20	081582	Cover for threaded spindle for KSN,ZHN,VestoWIN Klassik 170-220	0	9999999999999
30	004332	de: Alu-Griff LA 130mm,SH 45mm BR Deckel KSN,ZHN	0	9999999999999
36	025925	de: Knopf für Zweitluft D10x10 elox. KSN/ZHN	0	9999999999999
40	004340	de: Alu-Griff LA 130mm,SH 35mm BR, ZHN,KSN,ASN/E	0	9999999999999
50	000744	de: Alu-Türgriffblende eloxiert KSN 250 Aschetür	0	9999999999999
60	000752	de: Alu-Türgriffblende eloxiert KSN 250 Heiztür	0	9999999999999
63	008893	de: Arretierung schwarz E/SKX,HMX,FKX,MIRA	0	9999999999999
65	059145	de: Aschelade für KSN 250	0	9999999999999
70	059153	de: Aschekippblech für KSN210/250	0	9999999999999
80	085219	de: Aschetür für KSN 250/210	0	9999999999999
90	073407	Operating handle for FKV,KSL,ZHL,FKN,FAX,ZHN,KSN,FKH,HMX,VestoWIN Premium 200-202, VestoWIN Klassik 170-220	0	9999999999999
100	080098	KSN0341 Fastening clip for dummy washer for HN,KSN,ASN/E, fittings cabinet Vesto 200	0	9999999999999
110	085235	de: Blende für Aschetür braun für KSN 250	0	9999999999999
120	085227	de: Blende für Heiztür braun für KSN 250	0	9999999999999
130	081221	de: Blindscheibe weiß für ASN,KSN,ZHN KSN134	0	9999999999999
130	082198	de: Blindscheibe braun für KSN,ASN,ZHN	0	9999999999999
150	059102	Ground protection tray for KSN250, VestoWIN Klassik 220	0	9999999999999
160	085154	de: Deckel weiß für KSN 210/250 KSN089	0	9999999999999
160	086444	de: Deckel braun für KSN 210/250 KSN080	0	9999999999999
170	023922	Insulating cover support Ø20x15mm for KSN/ZHN,VestoWIN Klassik 170-220, VestoWIN Premium 200-202	0	9999999999999
180	004308	Cover hinge for KSN/ZHN, VestoWIN Klassik 170-220, VestoWIN Premium 200-202	0	9999999999999
185	503026	de: KSN053 Dekor rotbraun zu KSN 210/250	0	9999999999999
185	503028	KSN056 Pearl white for KSN 210/250	0	9999999999999
185	503029	KSN057 Dekor sahara-beige zu KSN 210/250	0	9999999999999
185	503030	KSN058 Dekor braun-beige zu KSN 210/250	0	9999999999999
185	503031	KSN060 Dekor dunkelbraun zu KSN 210/250	0	9999999999999
190	041693	Throttle flap for KSN210/250,ZHN18/21,VestoWIN Klassik 220	0	9999999999999
200	004030	Combustion controlling mechanism for KSN,ZHN,FKV,VestoWIN Klassik 170-220, VestoWIN Premium 200-202	0	9999999999999
210	081213	Threaded spindle (Ø20x377) for KSN,ZHN,VestoWIN Klassik 170-220, VestoWIN Premium 200-202	0	9999999999999
215	012998	de: HR-Stifte 6X41 gerändelt KSN,ZHN	0	9999999999999
220	004863	Manually operated bleeder VFR 3/8" for ZHN,KSN,GKW,NBE115,GKA/E,VestoWIN Klassik 170-220, VestoWIN Premium 200-202	0	9999999999999
230	059366	Lifting jack for KSN250, VestoWIN Klassik 220	0	9999999999999
240	085170	de: Heiztür für KSN 250	0	9999999999999
250	001139	Hot plate for KSN210/250, VestoWIN Klassik 220	0	9999999999999
250	004656	KSN017 Steel hot plate	0	9999999999999
260	059234	Stove frame KSN250,VEK220 to lot 4	0	9999999999999
290	060561	de: Kessel für KSN 250/210	0	9999999999999
291	060287	de: Zubehör für Kesseltausch für KSN	0	9999999999999
295	023949	de: Hutfix SCO 6820 VERZ/GE Klammern Dekor ASN,ZHN,KSN,OEX	0	9999999999999
300	004057	Knob no.30.298-002-001 for ZHN,FKV,VestoWIN Klassik 170-220, VestoWIN Premium 200-202	0	9999999999999
310	012513	Knee no.95T 5/4“ for KSN, VestoWIN Premium 200-202, VestoWIN Klassik 170-220	0	9999999999999
320	023906	Throttle flap button (D10x15) for KSN,ZHN,VestoWIN Klassik 170-220, VestoWIN Premium 200-202	0	9999999999999
325	025925	de: Knopf für Zweitluft D10x10 elox. KSN/ZHN	0	9999999999999
330	056780	Smoke hole cover (Ø=220mm) for ZHN,KSN,KSL,VestoWIN Klassik 170-220	0	9999999999999
340	081094	de: Kurbel für Hebevorrichtung für ZHN,KSN KSN192	0	9999999999999
350	085146	Crank for vibration device and grate lifting equipment for KSN,ZHN,VestoWIN Klassik 170-220	0	9999999999999
355	081043	de: Lagerbock für Rüttelachse für KSN,ZHN180/182,210/212	0	9999999999999
357	086398	de: Luftklappe für KSN210/250 179X79X0,75	0	9999999999999
360	072230	Wall support for ZHN16,KSN160/200/150, VestoWIN Klassik 170	0	9999999999999
370	059080	de: Mittelblende braun für KSN 210/250	0	9999999999999

Item no.	Article no.	Description	Serialnumber from	Serialnumber t
370	067290	de: Mittelblende weiß für KSN 250 KSN088	0	9999999999999
390	004065	KSN809 Knurled button for ZHN,KSN,VestoWIN Klassik 170-220, VestoWIN Premium 200-202, EasyWIN Klassik/Premium 180	0	9999999999999
400	004014	KSN095 241 5/4“-1“ reduction nipple, black for KSN,ZHN,VestoWIN Klassik 170-220, VestoWIN Premium 200-202	0	9999999999999
410	000280	KSL194 Cleaning brush (680x80/57x40) for FKU,ZHN,KSN,ZHL,KS,FKX,VestoWIN Klassik 170-220, VestoWIN Premium 200-202	0	9999999999999
420	072192	Scratcher	0	9999999999999
430	067253	de: Ring für Rohrstutzen weiß für ZHN,KSN250 ZHN054	0	9999999999999
430	067938	de: Ring für Rohrstutzen braun für ZHN,KSN250 ZHN254	0	9999999999999
450	085200	Flue outlet with throttle flap for KSN 210/250,VestoWIN Klassik 220	0	9999999999999
460	075744	KSL411 Smoke pipe for KSL25,ZHL,ZHN21/18,KSN250,VestoWIN Klassik 220	0	9999999999999
470	059323	KSN919 Grate support for KSN250,VestoWIN Klassik 220	0	9999999999999
480	080861	de: Rüttelachse (D16x133) KSN,ZHN KSN0051	0	9999999999999
490	004111	de: Rüttelrost (1-322-04111) KSN160/210/250	0	9999999999999
500	000809	de: Rüttelrost Mittelstück (1-323-00809) KSN 250	0	9999999999999
505	008885	Locking pin, black Nr: 00910-000-000 FKN088, HMX,NBL,E/SKX,FKX	0	9999999999999
510	059609	KSN954 Protective plate for extraction of flue gas for KSN210/250,VestoWIN Klassik 220	0	9999999999999
520	075183	de: Seitenwand links weiß kpl. KSN,ZHN	0	9999999999999
520	082147	de: Seitenwand links braun KSN/ZHN	0	9999999999999
540	075191	de: Seitenwand rechts weiß kpl. KSN,ZHN	0	9999999999999
540	082163	de: Seitenwand rechts braun KSN,ZHN	0	9999999999999
560	085189	de: Sockel für KSN 250	0	9999999999999
570	060562	Nut for lifting equipment rear for KSN 250, VestoWIN Klassik 220	0	9999999999999
580	059730	Nut for lifting equipment front for KSN250, VestoWIN Klassik 220	0	9999999999999
590	072222	Poker (D9x750) for KSL,ZHL,ZHN,KSN,VestoWIN Klassik 170-220, VestoWIN Premium 200-202	0	9999999999999
595	059579	de: Stehrost für KSN 210/250	0	9999999999999
610	004197	KSN094 WAF Plug no.290 5/4" for ZHN,KSN,Vesto WIN Klassik 170-220, VestoWIN Premium 200-202	0	9999999999999
620	005452	OK-915 Immersion sleeve (129 mm) No.55501.04 for EKX,OK/E,GWX,KSN,ZHN,OK-915,ETX,SNX,FKX,MIRA,FireWIN,VestoWIN Klassik 170-220,	0	9999999999999
630	004049	KSN027 Thermometer Z.Nr.SK 2014 IFC 52-052 KRF for ZHN,OEX,KSN,ASN,NBE,VestoWIN Premium 200-202, VestoWIN Klassik 170-220, fitting	0	9999999999999
640	010421	KSN100 Thermostat minimal 716 RU-9289 0-95 Grades for FK,GWX,KSN,ZHN,GSX,ETX,SNX,FKX,VestoWIN Klassik 170-220, VestoWIN Premium 20	0	9999999999999
650	061840	KSN022 Door catch for KSN,ZHN,PMX, VestoWIN Premium 200-202, VestoWIN Klassik 170-220	0	9999999999999
660	004413	KSN099 Union nut no.374 5/4“ for VestoWIN Premium 200-202, VestoWIN Klassik 170-220	0	9999999999999
670	059242	KSN945, VEK22 Wall end plate for KSN250,VestoWIN Klassik 170-220	0	9999999999999
675	066567	KSN9492 Throttle flap shaft for KSN210/250,ZHN18/21,VestoWIN Klassik 170-220, VestoWIN Premium 200-202	0	9999999999999
680	004006	KSN097 Bracket no.92 3/8“ for ZHN,KSN,VestoWIN Klassik 170-220, VestoWIN Premium 200-202	0	9999999999999
700	059528	de: Zugeinhängung links für KSN 210/250	0	9999999999999
710	059501	de: Zugeinhängung rechts für KSN 210/250	0	9999999999999

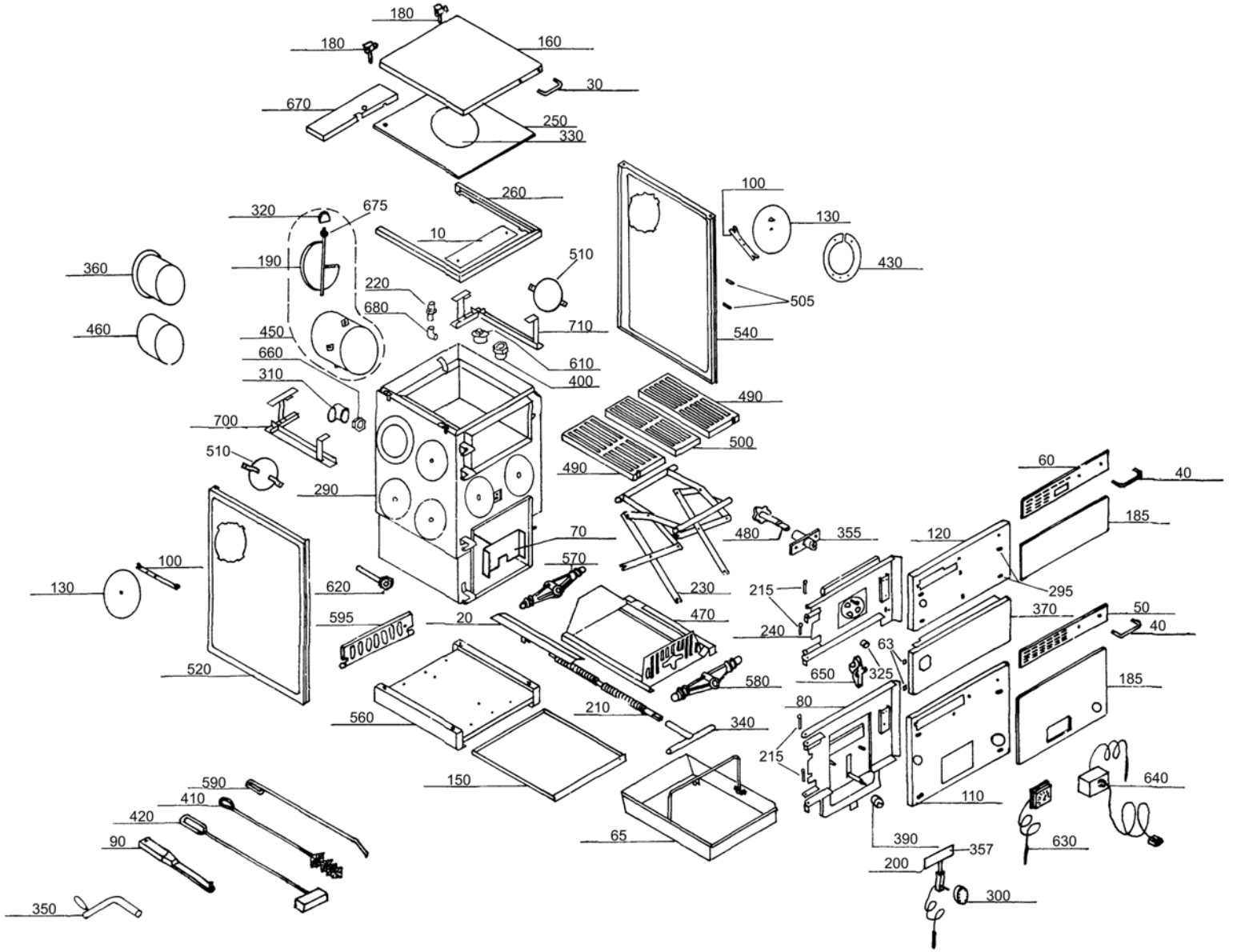
180
180
160
30
670
250
330
260
100
130
430
320
675
10
190
510
360
220
680
505
460
450
710
540
660
610
310
400
490
700
500
510
490
60
40
290
185
70
480
355
120
570
100
130
620
230
215
295
595
20
470
370
50
40
240
63
520
650
325
580
185
80
560
210
340
215
590
150
640
410
110
420
65
390
357
630
90
200
300
350

Item no.	Article no.	Description	Serialnumber from	Serialnumber t
10	076244	Oven frame cover (572x85x0,9) for KSL,KSN250,VestoWIN Klassik 220	0	9999999999999
20	081582	Cover for threaded spindle for KSN,ZHN,VestoWIN Klassik 170-220	0	9999999999999
30	004332	de: Alu-Griff LA 130mm,SH 45mm BR Deckel KSN,ZHN	0	9999999999999
36	025925	de: Knopf für Zweitluft D10x10 elox. KSN/ZHN	0	9999999999999
40	004340	de: Alu-Griff LA 130mm,SH 35mm BR, ZHN,KSN,ASN/E	0	9999999999999
50	000744	de: Alu-Türgriffblende eloxiert KSN 250 Aschetür	0	9999999999999
60	000752	de: Alu-Türgriffblende eloxiert KSN 250 Heiztür	0	9999999999999
63	008893	de: Arretierung schwarz E/SKX,HMX,FKX,MIRA	0	9999999999999
65	059145	de: Aschelade für KSN 250	0	9999999999999
70	059153	de: Aschekippblech für KSN210/250	0	9999999999999
80	085219	de: Aschetür für KSN 250/210	0	9999999999999
90	073407	Operating handle for FKV,KSL,ZHL,FKN,FAX,ZHN,KSN,FKH,HMX,VestoWIN Premium 200-202, VestoWIN Klassik 170-220	0	9999999999999
100	080098	KSN0341 Fastening clip for dummy washer for HN,KSN,ASN/E, fittings cabinet Vesto 200	0	9999999999999
110	085235	de: Blende für Aschetür braun für KSN 250	0	9999999999999
120	085227	de: Blende für Heiztür braun für KSN 250	0	9999999999999
130	081221	de: Blindscheibe weiß für ASN,KSN,ZHN KSN134	0	9999999999999
130	082198	de: Blindscheibe braun für KSN,ASN,ZHN	0	9999999999999
150	059102	Ground protection tray for KSN250, VestoWIN Klassik 220	0	9999999999999
160	085154	de: Deckel weiß für KSN 210/250 KSN089	0	9999999999999
160	086444	de: Deckel braun für KSN 210/250 KSN080	0	9999999999999
170	023922	Insulating cover support Ø20x15mm for KSN/ZHN,VestoWIN Klassik 170-220, VestoWIN Premium 200-202	0	9999999999999
180	004308	Cover hinge for KSN/ZHN, VestoWIN Klassik 170-220, VestoWIN Premium 200-202	0	9999999999999
185	503026	de: KSN053 Dekor rotbraun zu KSN 210/250	0	9999999999999
185	503028	KSN056 Pearl white for KSN 210/250	0	9999999999999
185	503029	KSN057 Dekor sahara-beige zu KSN 210/250	0	9999999999999
185	503030	KSN058 Dekor braun-beige zu KSN 210/250	0	9999999999999
185	503031	KSN060 Dekor dunkelbraun zu KSN 210/250	0	9999999999999
190	041693	Throttle flap for KSN210/250,ZHN18/21,VestoWIN Klassik 220	0	9999999999999
200	004030	Combustion controlling mechanism for KSN,ZHN,FKV,VestoWIN Klassik 170-220, VestoWIN Premium 200-202	0	9999999999999
210	081213	Threaded spindle (Ø20x377) for KSN,ZHN,VestoWIN Klassik 170-220, VestoWIN Premium 200-202	0	9999999999999
215	012998	de: HR-Stifte 6X41 gerändelt KSN,ZHN	0	9999999999999
220	004863	Manually operated bleeder VFR 3/8" for ZHN,KSN,GKW,NBE115,GKA/E,VestoWIN Klassik 170-220, VestoWIN Premium 200-202	0	9999999999999
230	059366	Lifting jack for KSN250, VestoWIN Klassik 220	0	9999999999999
240	085170	de: Heiztür für KSN 250	0	9999999999999
250	001139	Hot plate for KSN210/250, VestoWIN Klassik 220	0	9999999999999
250	004656	KSN017 Steel hot plate	0	9999999999999
260	059234	Stove frame KSN250,VEK220 to lot 4	0	9999999999999
290	060561	de: Kessel für KSN 250/210	0	9999999999999
291	060287	de: Zubehör für Kesseltausch für KSN	0	9999999999999
295	023949	de: Hutfix SCO 6820 VERZ/GE Klammern Dekor ASN,ZHN,KSN,OEX	0	9999999999999
300	004057	Knob no.30.298-002-001 for ZHN,FKV,VestoWIN Klassik 170-220, VestoWIN Premium 200-202	0	9999999999999
310	012513	Knee no.95T 5/4“ for KSN, VestoWIN Premium 200-202, VestoWIN Klassik 170-220	0	9999999999999
320	023906	Throttle flap button (D10x15) for KSN,ZHN,VestoWIN Klassik 170-220, VestoWIN Premium 200-202	0	9999999999999
325	025925	de: Knopf für Zweitluft D10x10 elox. KSN/ZHN	0	9999999999999
330	056780	Smoke hole cover (Ø=220mm) for ZHN,KSN,KSL,VestoWIN Klassik 170-220	0	9999999999999
340	081094	de: Kurbel für Hebevorrichtung für ZHN,KSN KSN192	0	9999999999999
350	085146	Crank for vibration device and grate lifting equipment for KSN,ZHN,VestoWIN Klassik 170-220	0	9999999999999
355	081043	de: Lagerbock für Rüttelachse für KSN,ZHN180/182,210/212	0	9999999999999
357	086398	de: Luftklappe für KSN210/250 179X79X0,75	0	9999999999999
360	072230	Wall support for ZHN16,KSN160/200/150, VestoWIN Klassik 170	0	9999999999999
370	059080	de: Mittelblende braun für KSN 210/250	0	9999999999999

Item no.	Article no.	Description	Serialnumber from	Serialnumber t
370	067290	de: Mittelblende weiß für KSN 250 KSN088	0	9999999999999
390	004065	KSN809 Knurled button for ZHN,KSN,VestoWIN Klassik 170-220, VestoWIN Premium 200-202, EasyWIN Klassik/Premium 180	0	9999999999999
400	004014	KSN095 241 5/4“-1“ reduction nipple, black for KSN,ZHN,VestoWIN Klassik 170-220, VestoWIN Premium 200-202	0	9999999999999
410	000280	KSL194 Cleaning brush (680x80/57x40) for FKU,ZHN,KSN,ZHL,KS,FKX,VestoWIN Klassik 170-220, VestoWIN Premium 200-202	0	9999999999999
420	072192	Scratcher	0	9999999999999
430	067253	de: Ring für Rohrstutzen weiß für ZHN,KSN250 ZHN054	0	9999999999999
430	067938	de: Ring für Rohrstutzen braun für ZHN,KSN250 ZHN254	0	9999999999999
450	085200	Flue outlet with throttle flap for KSN 210/250,VestoWIN Klassik 220	0	9999999999999
460	075744	KSL411 Smoke pipe for KSL25,ZHL,ZHN21/18,KSN250,VestoWIN Klassik 220	0	9999999999999
470	059323	KSN919 Grate support for KSN250,VestoWIN Klassik 220	0	9999999999999
480	080861	de: Rüttelachse (D16x133) KSN,ZHN KSN0051	0	9999999999999
490	004111	de: Rüttelrost (1-322-04111) KSN160/210/250	0	9999999999999
500	000809	de: Rüttelrost Mittelstück (1-323-00809) KSN 250	0	9999999999999
505	008885	Locking pin, black Nr: 00910-000-000 FKN088, HMX,NBL,E/SKX,FKX	0	9999999999999
510	059609	KSN954 Protective plate for extraction of flue gas for KSN210/250,VestoWIN Klassik 220	0	9999999999999
520	075183	de: Seitenwand links weiß kpl. KSN,ZHN	0	9999999999999
520	082147	de: Seitenwand links braun KSN/ZHN	0	9999999999999
540	075191	de: Seitenwand rechts weiß kpl. KSN,ZHN	0	9999999999999
540	082163	de: Seitenwand rechts braun KSN,ZHN	0	9999999999999
560	085189	de: Sockel für KSN 250	0	9999999999999
570	060562	Nut for lifting equipment rear for KSN 250, VestoWIN Klassik 220	0	9999999999999
580	059730	Nut for lifting equipment front for KSN250, VestoWIN Klassik 220	0	9999999999999
590	072222	Poker (D9x750) for KSL,ZHL,ZHN,KSN,VestoWIN Klassik 170-220, VestoWIN Premium 200-202	0	9999999999999
595	059579	de: Stehrost für KSN 210/250	0	9999999999999
610	004197	KSN094 WAF Plug no.290 5/4" for ZHN,KSN,Vesto WIN Klassik 170-220, VestoWIN Premium 200-202	0	9999999999999
620	005452	OK-915 Immersion sleeve (129 mm) No.55501.04 for EKX,OK/E,GWX,KSN,ZHN,OK-915,ETX,SNX,FKX,MIRA,FireWIN,VestoWIN Klassik 170-220,	0	9999999999999
630	004049	KSN027 Thermometer Z.Nr.SK 2014 IFC 52-052 KRF for ZHN,OEX,KSN,ASN,NBE,VestoWIN Premium 200-202, VestoWIN Klassik 170-220, fitting	0	9999999999999
640	010421	KSN100 Thermostat minimal 716 RU-9289 0-95 Grades for FK,GWX,KSN,ZHN,GSX,ETX,SNX,FKX,VestoWIN Klassik 170-220, VestoWIN Premium 20	0	9999999999999
650	061840	KSN022 Door catch for KSN,ZHN,PMX, VestoWIN Premium 200-202, VestoWIN Klassik 170-220	0	9999999999999
660	004413	KSN099 Union nut no.374 5/4“ for VestoWIN Premium 200-202, VestoWIN Klassik 170-220	0	9999999999999
670	059242	KSN945, VEK22 Wall end plate for KSN250,VestoWIN Klassik 170-220	0	9999999999999
675	066567	KSN9492 Throttle flap shaft for KSN210/250,ZHN18/21,VestoWIN Klassik 170-220, VestoWIN Premium 200-202	0	9999999999999
680	004006	KSN097 Bracket no.92 3/8“ for ZHN,KSN,VestoWIN Klassik 170-220, VestoWIN Premium 200-202	0	9999999999999
700	059528	de: Zugeinhängung links für KSN 210/250	0	9999999999999
710	059501	de: Zugeinhängung rechts für KSN 210/250	0	9999999999999

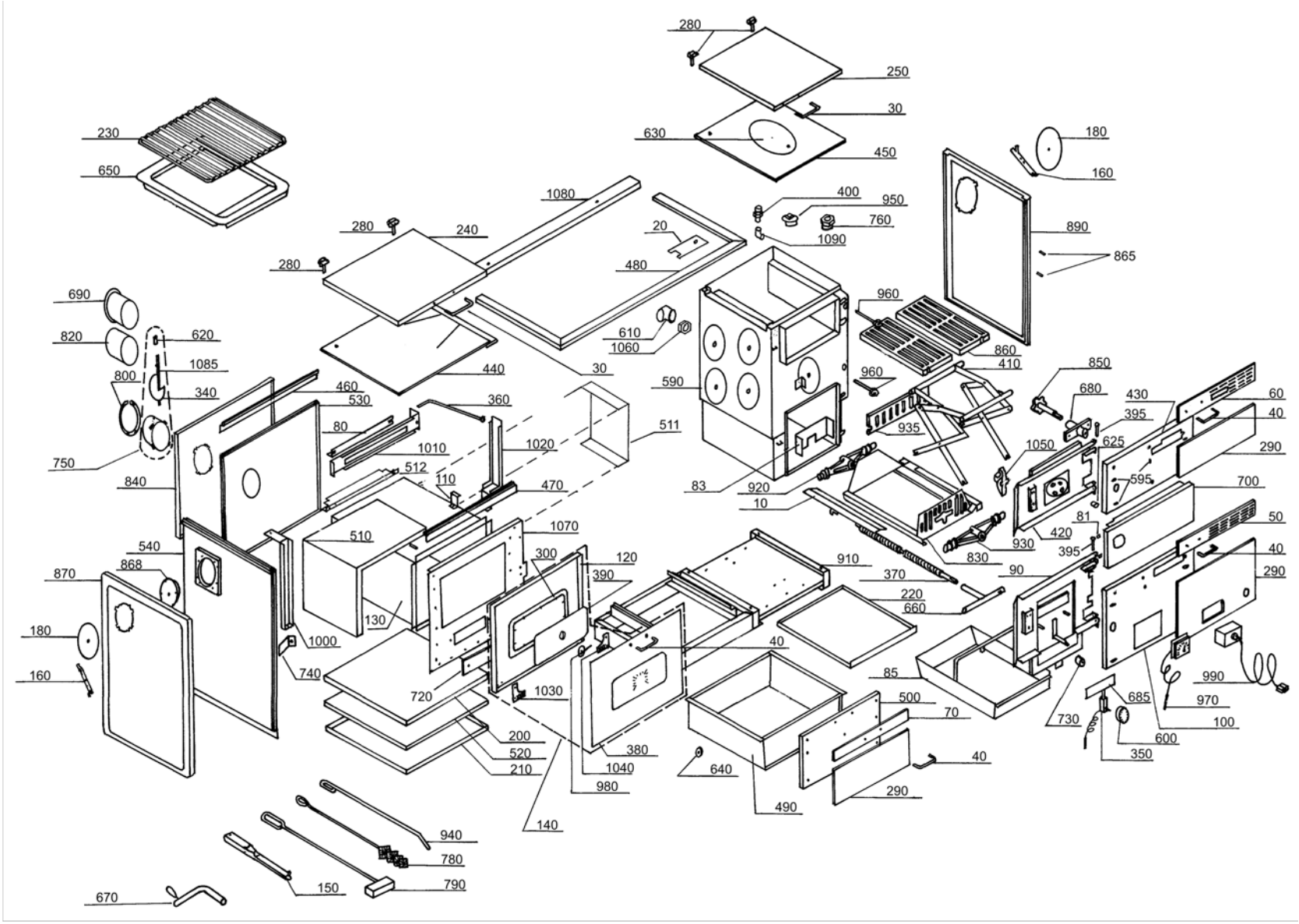
280
250
30
630
450
180
160
230
650
1080
400
950
760
1090
890
865
280
240
20
280
480
690
960
820
620
610
1060
860
410
1085
800
440
30
590
960
850
340
460
530
360
680
430
60
395
40
80
511
935
1010
1020
1050
625
290
750
512
110
470
83
920
595
700
840
10
81
50
510
1070
420
540
300
120
930
395
40
868
390
910
830
870
370
90
290
220
660
130
180
1000
40
85
990
160
740
720
1030
500
685
970
70
730
100
200
380
600
520
1040
640
40
350
210
980
290
490
140
940
780
150
790
670

Item no.	Article no.	Description	Serialnumber from	Serialnumber t
10	081582	Cover for threaded spindle for KSN,ZHN,VestoWIN Klassik 170-220	0	9999999999999
20	076031	de: Abdeckung für Herdrahmen für ZHN,ZHL 160	0	9999999999999
30	004332	de: Alu-Griff LA 130mm,SH 45mm BR Deckel KSN,ZHN	0	9999999999999
36	025925	de: Knopf für Zweitluft D10x10 elox. KSN/ZHN	0	9999999999999
40	000477	Aluminium handle for VarioWIN	0	9999999999999
40	004340	de: Alu-Griff LA 130mm,SH 35mm BR, ZHN,KSN,ASN/E	0	9999999999999
50	000523	de: Alu-Türgriffblende (338mm) ZHN 160/162 Aschetür	0	9999999999999
60	000515	de: Alu-Türgriffblende (338mm) ZHN 160/162 Heiztür ZHN924	0	9999999999999
70	004693	de: Alu-Türgriffblende ZHN Holzlade	0	9999999999999
80	067121	Heating flap for ZHL,ZHN,VestoWIN Premium 200-202 ZHN036	0	9999999999999
81	008893	de: Arretierung schwarz E/SKX,HMX,FKX,MIRA	0	9999999999999
83	081507	de: Aschekippblech (254x82x3) für KSN150/160/200 KSN110	0	9999999999999
85	080810	de: Aschelade für ZHN, KSN150/160/200	0	9999999999999
90	089842	de: Aschetür für ZHN 160	0	9999999999999
100	089834	de: Aschetürbombe für ZHN160	0	9999999999999
110	069418	de: Auflage für Anheizklappe (39x33x1,5) ZHN 160/162	0	9999999999999
120	065005	de: Backrohr Innentür für ZHN	0	9999999999999
130	050301	Oven set for ZHN	0	9999999999999
140	085448	de: Backrohrtür für ZHN	0	9999999999999
150	073407	Operating handle for FKV,KSL,ZHL,FKN,FAX,ZHN,KSN,FKH,HMX,VestoWIN Premium 200-202, VestoWIN Klassik 170-220	0	9999999999999
160	080098	KSN0341 Fastening clip for dummy washer for HN,KSN,ASN/E, fittings cabinet Vesto 200	0	9999999999999
170	067911	Flue protection plate for ZHN, VestoWIN Premium 200-202	0	9999999999999
180	081221	de: Blindscheibe weiß für ASN,KSN,ZHN KSN134	0	9999999999999
180	082198	de: Blindscheibe braun für KSN,ASN,ZHN	0	9999999999999
200	066834	Buttom for ZHN,VEP	0	9999999999999
210	066842	Bottom for ZHN,VEP	0	9999999999999
220	069086	de: Bodentasse (498x316x0,9) für ZHN 160/162	0	9999999999999
230	003174	Grid iron for ZHN, VestoWIN Premium 200-202	0	9999999999999
240	040800	de: Deckel weiß für ZHN Backrohrseite	0	9999999999999
240	086509	de: Deckel braun für ZHN Backrohrseite	0	9999999999999
250	086665	de: Deckel weiß ZHN160 Kessel u.ZHN180 Abgasanschluß oben	0	9999999999999
250	089788	de: Deckel braun ZHN 160 Kessel u.ZHN180 Abgasanschluß oben	0	9999999999999
280	004308	Cover hinge for KSN/ZHN, VestoWIN Klassik 170-220, VestoWIN Premium 200-202	0	9999999999999
290	503096	de: ZHN053 Dekor rotbraun zu ZHN160	0	9999999999999
290	503098	de: ZHN056 Dekor weiß zu ZHN160	0	9999999999999
290	503099	de: ZHN057 Dekor sahara-beige zu ZHN160	0	9999999999999
290	503100	de: ZHN058 Dekor braun-beige zu ZHN160	0	9999999999999
290	503101	de: ZHN060 Dekor dunkelbraun zu ZHN160	0	9999999999999
300	004928	Glass fibre cord 5/5mm for FireWIN, ZHN, VestoWIN Premium 200-202	0	9999999999999
340	041694	Throttle flap for KSN150/160/200,ZHN160/162, VestoWIN Klassik 170	0	9999999999999
350	004030	Combustion controlling mechanism for KSN,ZHN,FKV,VestoWIN Klassik 170-220, VestoWIN Premium 200-202	0	9999999999999
360	067326	Heating flap linkage for ZHN160/210, VestoWIN Premium 200	0	9999999999999
370	081213	Threaded spindle (Ø20x377) for KSN,ZHN,VestoWIN Klassik 170-220, VestoWIN Premium 200-202	0	9999999999999
380	067703	de: Glasscheibe außen für ZHN-Backrohrtüre (543x383mm)	0	9999999999999
390	054003	de: Glasscheibe inkl. Thermometer für Backrohrtüre ZHN und VEP bis 01/2014	0	9999999999999
395	012998	de: HR-Stifte 6X41 gerändelt KSN,ZHN	0	9999999999999
400	004863	Manually operated bleeder VFR 3/8" for ZHN,KSN,GKW,NBE115,GKA/E,VestoWIN Klassik 170-220, VestoWIN Premium 200-202	0	9999999999999
410	069116	de: Hebeschere für ZHN 160/162	0	9999999999999
420	089737	de: Heiztür für ZHN 160	0	9999999999999
430	089710	de: Heiztürbombe für ZHN160	0	9999999999999
440	004618	Oven hot plate (547x505x7mm) for ZHN160/180/210, VestoWIN Premium 200	0	9999999999999

Item no.	Article no.	Description	Serialnumber from	Serialnumber t
440	048171	Hot plate - flue tube top for VestoWIN Premium 200	0	9999999999999
450	051756	de: Herdplatte (505x317x7mm) zu Kesselseite für ZHN160/162	0	9999999999999
460	067598	de: Herdplattenauflage hinten für ZHN	0	9999999999999
470	067644	Hot plate support front for ZHN066, VestoWIN Premium 200-202	0	9999999999999
480	068748	de: Herdrahmen (1999x70x1,25) für ZHN160/162	0	9999999999999
490	050189	de: Holzlade mit Rollen für ZHN, VEP bis SN:104999	0	9999999999999
500	085421	de: Holzladebombe braun für ZHN	0	9999999999999
510	067091	Insolate sheet for ZHN	0	9999999999999
511	075442	Oven cover plate side for VestoWIN Premium 200-202	0	9999999999999
512	075450	de: Isolierblech hinten Backrohr ZHN (405X126X1-1,25)	0	9999999999999
520	060383	de: Isolierung für Backrohrboden für ZHN *ZHN0831	0	9999999999999
530	066826	de: Isolierwand hinten ZHN160/210,VEP200 bis SN: 104999	0	9999999999999
540	066893	de: Isolierwand seitlich für ZHN160/210,VEP200	0	9999999999999
590	060582	de: Kessel ZHN 160 (Ausführung mit Rauchabzug links)	0	9999999999999
591	060288	de: Zubehör für Kesseltausch für ZHN	0	9999999999999
595	023949	de: Hutfix SCO 6820 VERZ/GE Klammern Dekor ASN,ZHN,KSN,OEX	0	9999999999999
600	004057	Knob no.30.298-002-001 for ZHN,FKV,VestoWIN Klassik 170-220, VestoWIN Premium 200-202	0	9999999999999
610	012513	Knee no.95T 5/4“ for KSN, VestoWIN Premium 200-202, VestoWIN Klassik 170-220	0	9999999999999
620	023906	Throttle flap button (D10x15) for KSN,ZHN,VestoWIN Klassik 170-220, VestoWIN Premium 200-202	0	9999999999999
625	025925	de: Knopf für Zweitluft D10x10 elox. KSN/ZHN	0	9999999999999
630	056780	Smoke hole cover (Ø=220mm) for ZHN,KSN,KSL,VestoWIN Klassik 170-220	0	9999999999999
640	085332	de: Kohleladerad für Holzlade inkl.Schraube für ZHN,ZH	0	9999999999999
650	047084	Baking tray for ZHL,ZHN,VestoWIN Premium 200-202	0	9999999999999
660	081094	de: Kurbel für Hebevorrichtung für ZHN,KSN KSN192	0	9999999999999
670	085146	Crank for vibration device and grate lifting equipment for KSN,ZHN,VestoWIN Klassik 170-220	0	9999999999999
680	068977	de: Lagerbock für Rüttelachse für ZHN160/162	0	9999999999999
685	072362	de: Luftklappe für Feuerungsregler (191x82x0,75) für KSL,ZHL KSL317 ZHN,KSN150/160/200	0	9999999999999
690	072230	Wall support for ZHN16,KSN160/200/150, VestoWIN Klassik 170	0	9999999999999
700	064048	de: Mittelblende weiß für ZHN 160/162	0	9999999999999
700	069019	de: Mittelblende braun für ZHN160/162	0	9999999999999
720	066613	de: Reinigungstür für ZHN	0	9999999999999
730	004065	KSN809 Knurled button for ZHN,KSN,VestoWIN Klassik 170-220, VestoWIN Premium 200-202, EasyWIN Klassik/Premium 180	0	9999999999999
740	067296	Flue gas baffle plate for ZHN, VestoWIN Premium 200-202	0	9999999999999
750	089850	de: Rauchrohrstutzen mit Drosselklappe für ZHN160/162	0	9999999999999
760	004014	KSN095 241 5/4“-1“ reduction nipple, black for KSN,ZHN,VestoWIN Klassik 170-220, VestoWIN Premium 200-202	0	9999999999999
780	000280	KSL194 Cleaning brush (680x80/57x40) for FKU,ZHN,KSN,ZHL,KS,FKX,VestoWIN Klassik 170-220, VestoWIN Premium 200-202	0	9999999999999
790	072192	Scratcher	0	9999999999999
800	067253	de: Ring für Rohrstutzen weiß für ZHN,KSN250 ZHN054	0	9999999999999
800	067938	de: Ring für Rohrstutzen braun für ZHN,KSN250 ZHN254	0	9999999999999
820	072249	KSL051 Smoke pipe (Ø=130mm) for KSL15/20,ZHN16,KSN160/200/150, VestoWIN Premium 170	0	9999999999999
830	068853	de: Rostauflage für ZHN 160/162	0	9999999999999
840	066761	Rear wall for ZHN160/210,VestoWIN Premium 200	0	9999999999999
850	080861	de: Rüttelachse (D16x133) KSN,ZHN KSN0051	0	9999999999999
860	000396	de: Rüttelrost (360x230mm) für ZHN160/162	0	9999999999999
865	008885	Locking pin, black Nr: 00910-000-000 FKN088, HMX,NBL,E/SKX,FKX	0	9999999999999
868	067911	Flue protection plate for ZHN, VestoWIN Premium 200-202	0	9999999999999
870	075183	de: Seitenwand links weiß kpl. KSN,ZHN	0	9999999999999
870	082147	de: Seitenwand links braun KSN/ZHN	0	9999999999999
890	075191	de: Seitenwand rechts weiß kpl. KSN,ZHN	0	9999999999999
890	082163	de: Seitenwand rechts braun KSN,ZHN	0	9999999999999
910	068756	de: Sockel für ZHN162	0	9999999999999

Item no.	Article no.	Description	Serialnumber from	Serialnumber t
920	060602	de: Spindelmutter hinten Nr: 3-390-00388 für ZHN 160/162	0	9999999999999
930	068519	de: Spindelmutter vorne Nr: 3-390-00388 für ZHN 160/162	0	9999999999999
935	082015	de: Stehrost für KSN 160/200/150, ZHN	0	9999999999999
940	072222	Poker (D9x750) for KSL,ZHL,ZHN,KSN,VestoWIN Klassik 170-220, VestoWIN Premium 200-202	0	9999999999999
950	004197	KSN094 WAF Plug no.290 5/4" for ZHN,KSN,Vesto WIN Klassik 170-220, VestoWIN Premium 200-202	0	9999999999999
960	005452	OK-915 Immersion sleeve (129 mm) No.55501.04 for EKX,OK/E,GWX,KSN,ZHN,OK-915,ETX,SNX,FKX,MIRA,FireWIN,VestoWIN Klassik 170-220,	0	9999999999999
970	004049	KSN027 Thermometer Z.Nr.SK 2014 IFC 52-052 KRF for ZHN,OEX,KSN,ASN,NBE,VestoWIN Premium 200-202, VestoWIN Klassik 170-220, fitting	0	9999999999999
980	054003	de: Glasscheibe inkl. Thermometer für Backrohrtüre ZHN und VEP bis 01/2014	0	9999999999999
990	010421	KSN100 Thermostat minimal 716 RU-9289 0-95 Grades for FK,GWX,KSN,ZHN,GSX,ETX,SNX,FKX,VestoWIN Klassik 170-220, VestoWIN Premium 20	0	9999999999999
1000	067199	Oven dividing/insulating wall for VestoWIN Premium 200-202	0	9999999999999
1010	067040	Dividing wall top for ZHN160/210,VestoWIN Premium 200	0	9999999999999
1020	067180	Dividing wall between boiler and oven for ZHN, VestoWIN Premium 200-202	0	9999999999999
1030	048063	de: Türscharnier links inkl.Schrauben für Backrohr ZHN	0	9999999999999
1040	048065	de: Türscharnier rechts inkl.Schrauben für Backrohr ZHN	0	9999999999999
1050	061840	KSN022 Door catch for KSN,ZHN,PMX, VestoWIN Premium 200-202, VestoWIN Klassik 170-220	0	9999999999999
1060	004413	KSN099 Union nut no.374 5/4“ for VestoWIN Premium 200-202, VestoWIN Klassik 170-220	0	9999999999999
1070	066745	de: Vorderwand für Backrohr für ZHN 160/210	0	9999999999999
1080	073458	Wall end plate (954x108x1,25) for ZHN160, VestoWIN Premium 202	0	9999999999999
1085	080985	de: Welle für Drosselklappe (D8x253) KSN150/160/200,ZHN16	0	9999999999999
1090	004006	KSN097 Bracket no.92 3/8“ for ZHN,KSN,VestoWIN Klassik 170-220, VestoWIN Premium 200-202	0	9999999999999

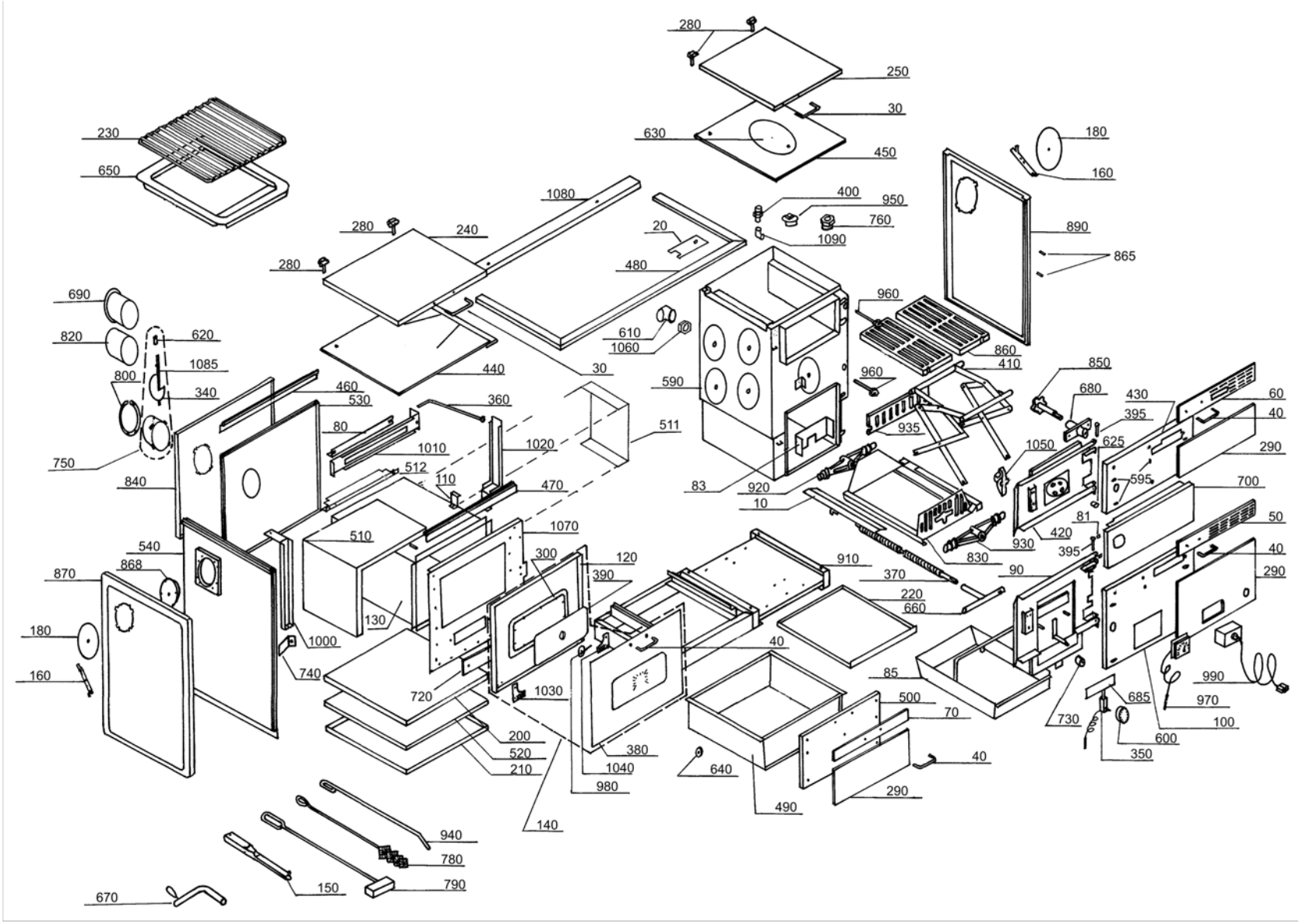
280
250
30
630
450
180
160
230
650
1080
400
950
760
1090
890
865
280
240
20
480
280
690
820
620
1085
800
340
460
530
440
30
610
1060
960
860
410
850
680
430
395
60
40
290
590
960
935
1050
625
595
700
750
840
80
1010
512
110
1020
360
511
470
83
920
10
81
420
930
830
395
50
40
290
540
868
870
510
1070
300
120
390
910
370
90
220
660
180
160
130
1000
740
720
1030
40
85
500
70
730
685
990
970
100
600
350
200
520
210
380
1040
980
640
490
40
290
140
940
780
790
150
670

Item no.	Article no.	Description	Serialnumber from	Serialnumber t
10	081582	Cover for threaded spindle for KSN,ZHN,VestoWIN Klassik 170-220	0	9999999999999
20	076031	de: Abdeckung für Herdrahmen für ZHN,ZHL 160	0	9999999999999
30	004332	de: Alu-Griff LA 130mm,SH 45mm BR Deckel KSN,ZHN	0	9999999999999
36	025925	de: Knopf für Zweitluft D10x10 elox. KSN/ZHN	0	9999999999999
40	000477	Aluminium handle for VarioWIN	0	9999999999999
40	004340	de: Alu-Griff LA 130mm,SH 35mm BR, ZHN,KSN,ASN/E	0	9999999999999
50	000523	de: Alu-Türgriffblende (338mm) ZHN 160/162 Aschetür	0	9999999999999
60	000515	de: Alu-Türgriffblende (338mm) ZHN 160/162 Heiztür ZHN924	0	9999999999999
70	004693	de: Alu-Türgriffblende ZHN Holzlade	0	9999999999999
80	067121	Heating flap for ZHL,ZHN,VestoWIN Premium 200-202 ZHN036	0	9999999999999
81	008893	de: Arretierung schwarz E/SKX,HMX,FKX,MIRA	0	9999999999999
83	081507	de: Aschekippblech (254x82x3) für KSN150/160/200 KSN110	0	9999999999999
85	080810	de: Aschelade für ZHN, KSN150/160/200	0	9999999999999
90	089842	de: Aschetür für ZHN 160	0	9999999999999
100	089834	de: Aschetürbombe für ZHN160	0	9999999999999
110	069418	de: Auflage für Anheizklappe (39x33x1,5) ZHN 160/162	0	9999999999999
120	065005	de: Backrohr Innentür für ZHN	0	9999999999999
130	050301	Oven set for ZHN	0	9999999999999
140	085448	de: Backrohrtür für ZHN	0	9999999999999
150	073407	Operating handle for FKV,KSL,ZHL,FKN,FAX,ZHN,KSN,FKH,HMX,VestoWIN Premium 200-202, VestoWIN Klassik 170-220	0	9999999999999
160	080098	KSN0341 Fastening clip for dummy washer for HN,KSN,ASN/E, fittings cabinet Vesto 200	0	9999999999999
170	067911	Flue protection plate for ZHN, VestoWIN Premium 200-202	0	9999999999999
180	081221	de: Blindscheibe weiß für ASN,KSN,ZHN KSN134	0	9999999999999
180	082198	de: Blindscheibe braun für KSN,ASN,ZHN	0	9999999999999
200	066834	Buttom for ZHN,VEP	0	9999999999999
210	066842	Bottom for ZHN,VEP	0	9999999999999
220	069086	de: Bodentasse (498x316x0,9) für ZHN 160/162	0	9999999999999
230	003174	Grid iron for ZHN, VestoWIN Premium 200-202	0	9999999999999
240	040800	de: Deckel weiß für ZHN Backrohrseite	0	9999999999999
240	086509	de: Deckel braun für ZHN Backrohrseite	0	9999999999999
250	086665	de: Deckel weiß ZHN160 Kessel u.ZHN180 Abgasanschluß oben	0	9999999999999
250	089788	de: Deckel braun ZHN 160 Kessel u.ZHN180 Abgasanschluß oben	0	9999999999999
280	004308	Cover hinge for KSN/ZHN, VestoWIN Klassik 170-220, VestoWIN Premium 200-202	0	9999999999999
290	503096	de: ZHN053 Dekor rotbraun zu ZHN160	0	9999999999999
290	503098	de: ZHN056 Dekor weiß zu ZHN160	0	9999999999999
290	503099	de: ZHN057 Dekor sahara-beige zu ZHN160	0	9999999999999
290	503100	de: ZHN058 Dekor braun-beige zu ZHN160	0	9999999999999
290	503101	de: ZHN060 Dekor dunkelbraun zu ZHN160	0	9999999999999
300	004928	Glass fibre cord 5/5mm for FireWIN, ZHN, VestoWIN Premium 200-202	0	9999999999999
340	041694	Throttle flap for KSN150/160/200,ZHN160/162, VestoWIN Klassik 170	0	9999999999999
350	004030	Combustion controlling mechanism for KSN,ZHN,FKV,VestoWIN Klassik 170-220, VestoWIN Premium 200-202	0	9999999999999
360	067326	Heating flap linkage for ZHN160/210, VestoWIN Premium 200	0	9999999999999
370	081213	Threaded spindle (Ø20x377) for KSN,ZHN,VestoWIN Klassik 170-220, VestoWIN Premium 200-202	0	9999999999999
380	067703	de: Glasscheibe außen für ZHN-Backrohrtüre (543x383mm)	0	9999999999999
390	054003	de: Glasscheibe inkl. Thermometer für Backrohrtüre ZHN und VEP bis 01/2014	0	9999999999999
395	012998	de: HR-Stifte 6X41 gerändelt KSN,ZHN	0	9999999999999
400	004863	Manually operated bleeder VFR 3/8" for ZHN,KSN,GKW,NBE115,GKA/E,VestoWIN Klassik 170-220, VestoWIN Premium 200-202	0	9999999999999
410	069116	de: Hebeschere für ZHN 160/162	0	9999999999999
420	089737	de: Heiztür für ZHN 160	0	9999999999999
430	089710	de: Heiztürbombe für ZHN160	0	9999999999999
440	004618	Oven hot plate (547x505x7mm) for ZHN160/180/210, VestoWIN Premium 200	0	9999999999999

Item no.	Article no.	Description	Serialnumber from	Serialnumber t
440	048171	Hot plate - flue tube top for VestoWIN Premium 200	0	9999999999999
450	051756	de: Herdplatte (505x317x7mm) zu Kesselseite für ZHN160/162	0	9999999999999
460	067598	de: Herdplattenauflage hinten für ZHN	0	9999999999999
470	067644	Hot plate support front for ZHN066, VestoWIN Premium 200-202	0	9999999999999
480	068748	de: Herdrahmen (1999x70x1,25) für ZHN160/162	0	9999999999999
490	050189	de: Holzlade mit Rollen für ZHN, VEP bis SN:104999	0	9999999999999
500	085421	de: Holzladebombe braun für ZHN	0	9999999999999
510	067091	Insolate sheet for ZHN	0	9999999999999
511	075442	Oven cover plate side for VestoWIN Premium 200-202	0	9999999999999
512	075450	de: Isolierblech hinten Backrohr ZHN (405X126X1-1,25)	0	9999999999999
520	060383	de: Isolierung für Backrohrboden für ZHN *ZHN0831	0	9999999999999
530	066826	de: Isolierwand hinten ZHN160/210,VEP200 bis SN: 104999	0	9999999999999
540	066893	de: Isolierwand seitlich für ZHN160/210,VEP200	0	9999999999999
590	060582	de: Kessel ZHN 160 (Ausführung mit Rauchabzug links)	0	9999999999999
591	060288	de: Zubehör für Kesseltausch für ZHN	0	9999999999999
595	023949	de: Hutfix SCO 6820 VERZ/GE Klammern Dekor ASN,ZHN,KSN,OEX	0	9999999999999
600	004057	Knob no.30.298-002-001 for ZHN,FKV,VestoWIN Klassik 170-220, VestoWIN Premium 200-202	0	9999999999999
610	012513	Knee no.95T 5/4“ for KSN, VestoWIN Premium 200-202, VestoWIN Klassik 170-220	0	9999999999999
620	023906	Throttle flap button (D10x15) for KSN,ZHN,VestoWIN Klassik 170-220, VestoWIN Premium 200-202	0	9999999999999
625	025925	de: Knopf für Zweitluft D10x10 elox. KSN/ZHN	0	9999999999999
630	056780	Smoke hole cover (Ø=220mm) for ZHN,KSN,KSL,VestoWIN Klassik 170-220	0	9999999999999
640	085332	de: Kohleladerad für Holzlade inkl.Schraube für ZHN,ZH	0	9999999999999
650	047084	Baking tray for ZHL,ZHN,VestoWIN Premium 200-202	0	9999999999999
660	081094	de: Kurbel für Hebevorrichtung für ZHN,KSN KSN192	0	9999999999999
670	085146	Crank for vibration device and grate lifting equipment for KSN,ZHN,VestoWIN Klassik 170-220	0	9999999999999
680	068977	de: Lagerbock für Rüttelachse für ZHN160/162	0	9999999999999
685	072362	de: Luftklappe für Feuerungsregler (191x82x0,75) für KSL,ZHL KSL317 ZHN,KSN150/160/200	0	9999999999999
690	072230	Wall support for ZHN16,KSN160/200/150, VestoWIN Klassik 170	0	9999999999999
700	064048	de: Mittelblende weiß für ZHN 160/162	0	9999999999999
700	069019	de: Mittelblende braun für ZHN160/162	0	9999999999999
720	066613	de: Reinigungstür für ZHN	0	9999999999999
730	004065	KSN809 Knurled button for ZHN,KSN,VestoWIN Klassik 170-220, VestoWIN Premium 200-202, EasyWIN Klassik/Premium 180	0	9999999999999
740	067296	Flue gas baffle plate for ZHN, VestoWIN Premium 200-202	0	9999999999999
750	089850	de: Rauchrohrstutzen mit Drosselklappe für ZHN160/162	0	9999999999999
760	004014	KSN095 241 5/4“-1“ reduction nipple, black for KSN,ZHN,VestoWIN Klassik 170-220, VestoWIN Premium 200-202	0	9999999999999
780	000280	KSL194 Cleaning brush (680x80/57x40) for FKU,ZHN,KSN,ZHL,KS,FKX,VestoWIN Klassik 170-220, VestoWIN Premium 200-202	0	9999999999999
790	072192	Scratcher	0	9999999999999
800	067253	de: Ring für Rohrstutzen weiß für ZHN,KSN250 ZHN054	0	9999999999999
800	067938	de: Ring für Rohrstutzen braun für ZHN,KSN250 ZHN254	0	9999999999999
820	072249	KSL051 Smoke pipe (Ø=130mm) for KSL15/20,ZHN16,KSN160/200/150, VestoWIN Premium 170	0	9999999999999
830	068853	de: Rostauflage für ZHN 160/162	0	9999999999999
840	066761	Rear wall for ZHN160/210,VestoWIN Premium 200	0	9999999999999
850	080861	de: Rüttelachse (D16x133) KSN,ZHN KSN0051	0	9999999999999
860	000396	de: Rüttelrost (360x230mm) für ZHN160/162	0	9999999999999
865	008885	Locking pin, black Nr: 00910-000-000 FKN088, HMX,NBL,E/SKX,FKX	0	9999999999999
868	067911	Flue protection plate for ZHN, VestoWIN Premium 200-202	0	9999999999999
870	075183	de: Seitenwand links weiß kpl. KSN,ZHN	0	9999999999999
870	082147	de: Seitenwand links braun KSN/ZHN	0	9999999999999
890	075191	de: Seitenwand rechts weiß kpl. KSN,ZHN	0	9999999999999
890	082163	de: Seitenwand rechts braun KSN,ZHN	0	9999999999999
910	068756	de: Sockel für ZHN162	0	9999999999999

Item no.	Article no.	Description	Serialnumber from	Serialnumber t
920	060602	de: Spindelmutter hinten Nr: 3-390-00388 für ZHN 160/162	0	9999999999999
930	068519	de: Spindelmutter vorne Nr: 3-390-00388 für ZHN 160/162	0	9999999999999
935	082015	de: Stehrost für KSN 160/200/150, ZHN	0	9999999999999
940	072222	Poker (D9x750) for KSL,ZHL,ZHN,KSN,VestoWIN Klassik 170-220, VestoWIN Premium 200-202	0	9999999999999
950	004197	KSN094 WAF Plug no.290 5/4" for ZHN,KSN,Vesto WIN Klassik 170-220, VestoWIN Premium 200-202	0	9999999999999
960	005452	OK-915 Immersion sleeve (129 mm) No.55501.04 for EKX,OK/E,GWX,KSN,ZHN,OK-915,ETX,SNX,FKX,MIRA,FireWIN,VestoWIN Klassik 170-220,	0	9999999999999
970	004049	KSN027 Thermometer Z.Nr.SK 2014 IFC 52-052 KRF for ZHN,OEX,KSN,ASN,NBE,VestoWIN Premium 200-202, VestoWIN Klassik 170-220, fitting	0	9999999999999
980	054003	de: Glasscheibe inkl. Thermometer für Backrohrtüre ZHN und VEP bis 01/2014	0	9999999999999
990	010421	KSN100 Thermostat minimal 716 RU-9289 0-95 Grades for FK,GWX,KSN,ZHN,GSX,ETX,SNX,FKX,VestoWIN Klassik 170-220, VestoWIN Premium 20	0	9999999999999
1000	067199	Oven dividing/insulating wall for VestoWIN Premium 200-202	0	9999999999999
1010	067040	Dividing wall top for ZHN160/210,VestoWIN Premium 200	0	9999999999999
1020	067180	Dividing wall between boiler and oven for ZHN, VestoWIN Premium 200-202	0	9999999999999
1030	048063	de: Türscharnier links inkl.Schrauben für Backrohr ZHN	0	9999999999999
1040	048065	de: Türscharnier rechts inkl.Schrauben für Backrohr ZHN	0	9999999999999
1050	061840	KSN022 Door catch for KSN,ZHN,PMX, VestoWIN Premium 200-202, VestoWIN Klassik 170-220	0	9999999999999
1060	004413	KSN099 Union nut no.374 5/4“ for VestoWIN Premium 200-202, VestoWIN Klassik 170-220	0	9999999999999
1070	066745	de: Vorderwand für Backrohr für ZHN 160/210	0	9999999999999
1080	073458	Wall end plate (954x108x1,25) for ZHN160, VestoWIN Premium 202	0	9999999999999
1085	080985	de: Welle für Drosselklappe (D8x253) KSN150/160/200,ZHN16	0	9999999999999
1090	004006	KSN097 Bracket no.92 3/8“ for ZHN,KSN,VestoWIN Klassik 170-220, VestoWIN Premium 200-202	0	9999999999999

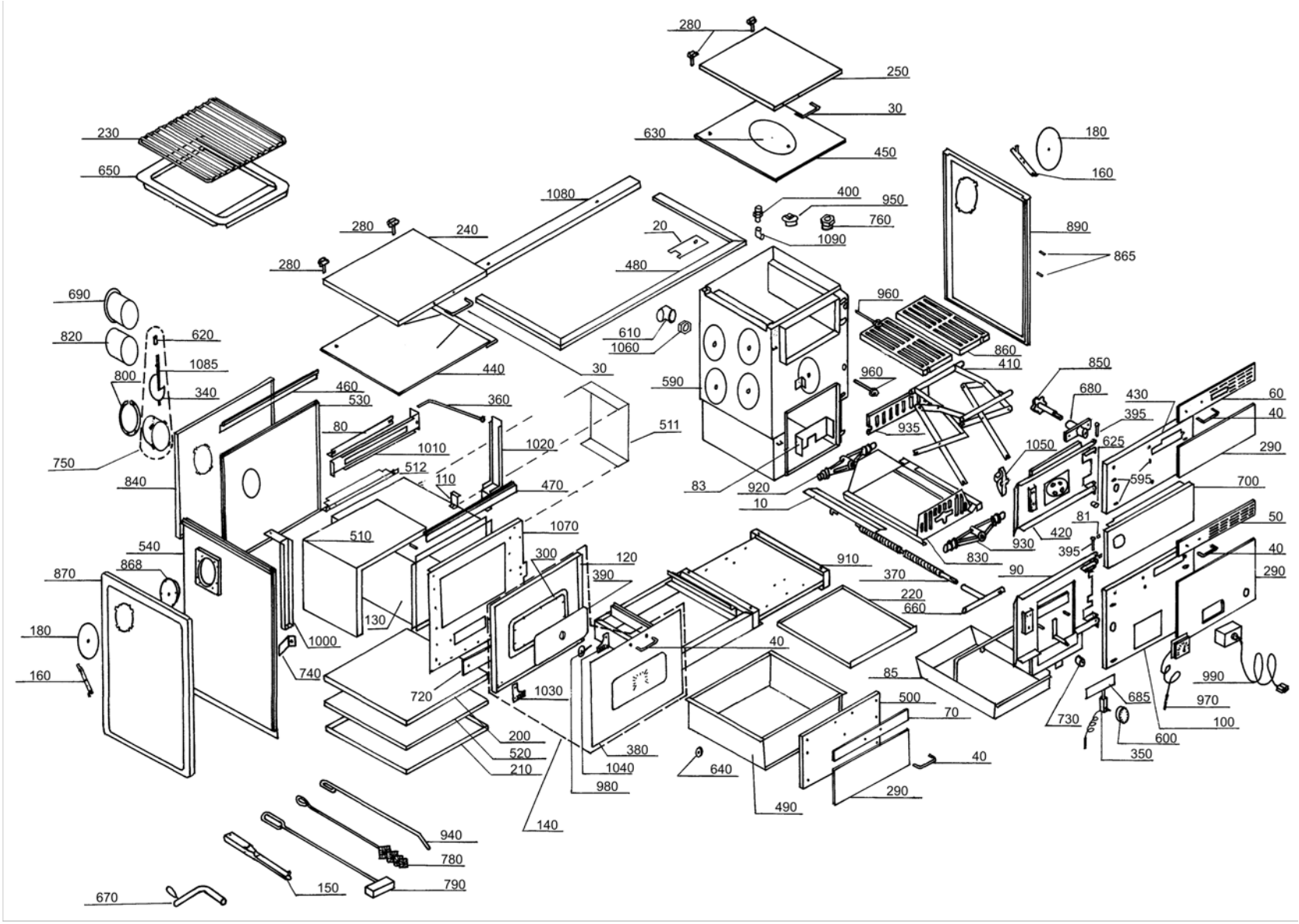
280
250
30
630
450
180
160
230
650
1080
400
950
760
1090
890
865
280
240
20
280
480
690
960
820
620
610
1060
860
410
1085
800
440
30
590
960
850
340
460
530
360
680
430
60
395
40
80
511
935
1010
1020
1050
625
290
750
512
110
470
83
920
595
700
840
10
81
50
1070
510
420
930
540
300
120
910
830
395
40
868
390
370
90
290
870
220
660
130
180
1000
40
85
990
160
740
720
1030
500
685
970
70
730
100
200
380
600
520
1040
640
40
350
210
980
290
490
140
940
780
150
790
670

Item no.	Article no.	Description	Serialnumber from	Serialnumber t
10	081582	Cover for threaded spindle for KSN,ZHN,VestoWIN Klassik 170-220	0	9999999999999
20	076031	de: Abdeckung für Herdrahmen für ZHN,ZHL 160	0	9999999999999
30	004332	de: Alu-Griff LA 130mm,SH 45mm BR Deckel KSN,ZHN	0	9999999999999
36	025925	de: Knopf für Zweitluft D10x10 elox. KSN/ZHN	0	9999999999999
40	000477	Aluminium handle for VarioWIN	0	9999999999999
40	004340	de: Alu-Griff LA 130mm,SH 35mm BR, ZHN,KSN,ASN/E	0	9999999999999
50	000523	de: Alu-Türgriffblende (338mm) ZHN 160/162 Aschetür	0	9999999999999
60	000515	de: Alu-Türgriffblende (338mm) ZHN 160/162 Heiztür ZHN924	0	9999999999999
70	004693	de: Alu-Türgriffblende ZHN Holzlade	0	9999999999999
80	067121	Heating flap for ZHL,ZHN,VestoWIN Premium 200-202 ZHN036	0	9999999999999
81	008893	de: Arretierung schwarz E/SKX,HMX,FKX,MIRA	0	9999999999999
83	081507	de: Aschekippblech (254x82x3) für KSN150/160/200 KSN110	0	9999999999999
85	080810	de: Aschelade für ZHN, KSN150/160/200	0	9999999999999
90	089818	de: Aschetür für ZHN162 ZHN812	0	9999999999999
100	089826	de: Aschetürbombe für ZHN162	0	9999999999999
110	069418	de: Auflage für Anheizklappe (39x33x1,5) ZHN 160/162	0	9999999999999
120	065005	de: Backrohr Innentür für ZHN	0	9999999999999
130	050301	Oven set for ZHN	0	9999999999999
140	085448	de: Backrohrtür für ZHN	0	9999999999999
150	073407	Operating handle for FKV,KSL,ZHL,FKN,FAX,ZHN,KSN,FKH,HMX,VestoWIN Premium 200-202, VestoWIN Klassik 170-220	0	9999999999999
160	080098	KSN0341 Fastening clip for dummy washer for HN,KSN,ASN/E, fittings cabinet Vesto 200	0	9999999999999
170	067911	Flue protection plate for ZHN, VestoWIN Premium 200-202	0	9999999999999
180	081221	de: Blindscheibe weiß für ASN,KSN,ZHN KSN134	0	9999999999999
180	082198	de: Blindscheibe braun für KSN,ASN,ZHN	0	9999999999999
200	066834	Buttom for ZHN,VEP	0	9999999999999
210	066842	Bottom for ZHN,VEP	0	9999999999999
220	069086	de: Bodentasse (498x316x0,9) für ZHN 160/162	0	9999999999999
230	003174	Grid iron for ZHN, VestoWIN Premium 200-202	0	9999999999999
240	040800	de: Deckel weiß für ZHN Backrohrseite	0	9999999999999
240	086509	de: Deckel braun für ZHN Backrohrseite	0	9999999999999
250	086576	de: Deckel weiß ZHN162 Kesselse.u.ZHN182 Abgasanschluß oben	0	9999999999999
250	089761	de: Deckel braun ZHN162 Kessel u. ZHN182 Abgasanschluß oben	0	9999999999999
280	004308	Cover hinge for KSN/ZHN, VestoWIN Klassik 170-220, VestoWIN Premium 200-202	0	9999999999999
290	503108	de: ZHN073 Dekor rotbraun zu ZHN162	0	9999999999999
290	503110	de: ZHN076 Dekor weiß zu ZHN162	0	9999999999999
290	503111	de: ZHN077 Dekor sahara-beige zu ZHN162	0	9999999999999
290	503112	de: ZHN078 Dekor braun-beige zu ZHN162	0	9999999999999
290	503114	de: ZHN080 Dekor dunkelbraun zu ZHN162	0	9999999999999
300	004928	Glass fibre cord 5/5mm for FireWIN, ZHN, VestoWIN Premium 200-202	0	9999999999999
340	041694	Throttle flap for KSN150/160/200,ZHN160/162, VestoWIN Klassik 170	0	9999999999999
350	004030	Combustion controlling mechanism for KSN,ZHN,FKV,VestoWIN Klassik 170-220, VestoWIN Premium 200-202	0	9999999999999
360	067148	Heating flap linkage for ZHN162/212, ZHN0364, VestoWIN Premium 202	0	9999999999999
370	081213	Threaded spindle (Ø20x377) for KSN,ZHN,VestoWIN Klassik 170-220, VestoWIN Premium 200-202	0	9999999999999
380	067703	de: Glasscheibe außen für ZHN-Backrohrtüre (543x383mm)	0	9999999999999
390	054003	de: Glasscheibe inkl. Thermometer für Backrohrtüre ZHN und VEP bis 01/2014	0	9999999999999
395	012998	de: HR-Stifte 6X41 gerändelt KSN,ZHN	0	9999999999999
400	004863	Manually operated bleeder VFR 3/8" for ZHN,KSN,GKW,NBE115,GKA/E,VestoWIN Klassik 170-220, VestoWIN Premium 200-202	0	9999999999999
410	069116	de: Hebeschere für ZHN 160/162	0	9999999999999
420	089729	de: Heiztür für ZHN 162	0	9999999999999
430	089702	de: Heiztürbombe für ZHN162	0	9999999999999
440	004626	Oven hot plate (547x505x7mm) for ZHN162/182/212 ZHN0621, VestoWIN Premium 202	0	9999999999999

Item no.	Article no.	Description	Serialnumber from	Serialnumber t
440	048172	Hot plate - flue tube top for VestoWIN Premium 202	0	9999999999999
450	051756	de: Herdplatte (505x317x7mm) zu Kesselseite für ZHN160/162	0	9999999999999
460	067598	de: Herdplattenauflage hinten für ZHN	0	9999999999999
470	067644	Hot plate support front for ZHN066, VestoWIN Premium 200-202	0	9999999999999
480	068748	de: Herdrahmen (1999x70x1,25) für ZHN160/162	0	9999999999999
490	050189	de: Holzlade mit Rollen für ZHN, VEP bis SN:104999	0	9999999999999
500	085421	de: Holzladebombe braun für ZHN	0	9999999999999
510	067091	Insolate sheet for ZHN	0	9999999999999
511	075442	Oven cover plate side for VestoWIN Premium 200-202	0	9999999999999
512	075450	de: Isolierblech hinten Backrohr ZHN (405X126X1-1,25)	0	9999999999999
520	060383	de: Isolierung für Backrohrboden für ZHN *ZHN0831	0	9999999999999
530	066818	Insolate rear wall ZHN162/212,VEP202 to lot 4	0	9999999999999
540	066885	Insolate sidewards ZHN162/212,VEP202	0	9999999999999
590	060581	de: Kessel ZHN 162 (Ausführung mit Rauchabzug rechts)	0	9999999999999
591	060288	de: Zubehör für Kesseltausch für ZHN	0	9999999999999
595	023949	de: Hutfix SCO 6820 VERZ/GE Klammern Dekor ASN,ZHN,KSN,OEX	0	9999999999999
600	004057	Knob no.30.298-002-001 for ZHN,FKV,VestoWIN Klassik 170-220, VestoWIN Premium 200-202	0	9999999999999
610	012513	Knee no.95T 5/4“ for KSN, VestoWIN Premium 200-202, VestoWIN Klassik 170-220	0	9999999999999
620	023906	Throttle flap button (D10x15) for KSN,ZHN,VestoWIN Klassik 170-220, VestoWIN Premium 200-202	0	9999999999999
625	025925	de: Knopf für Zweitluft D10x10 elox. KSN/ZHN	0	9999999999999
630	056780	Smoke hole cover (Ø=220mm) for ZHN,KSN,KSL,VestoWIN Klassik 170-220	0	9999999999999
640	085332	de: Kohleladerad für Holzlade inkl.Schraube für ZHN,ZH	0	9999999999999
650	047084	Baking tray for ZHL,ZHN,VestoWIN Premium 200-202	0	9999999999999
660	081094	de: Kurbel für Hebevorrichtung für ZHN,KSN KSN192	0	9999999999999
670	085146	Crank for vibration device and grate lifting equipment for KSN,ZHN,VestoWIN Klassik 170-220	0	9999999999999
680	068977	de: Lagerbock für Rüttelachse für ZHN160/162	0	9999999999999
685	072362	de: Luftklappe für Feuerungsregler (191x82x0,75) für KSL,ZHL KSL317 ZHN,KSN150/160/200	0	9999999999999
690	072230	Wall support for ZHN16,KSN160/200/150, VestoWIN Klassik 170	0	9999999999999
700	064048	de: Mittelblende weiß für ZHN 160/162	0	9999999999999
700	069019	de: Mittelblende braun für ZHN160/162	0	9999999999999
720	066613	de: Reinigungstür für ZHN	0	9999999999999
730	004065	KSN809 Knurled button for ZHN,KSN,VestoWIN Klassik 170-220, VestoWIN Premium 200-202, EasyWIN Klassik/Premium 180	0	9999999999999
740	067296	Flue gas baffle plate for ZHN, VestoWIN Premium 200-202	0	9999999999999
750	089850	de: Rauchrohrstutzen mit Drosselklappe für ZHN160/162	0	9999999999999
760	004014	KSN095 241 5/4“-1“ reduction nipple, black for KSN,ZHN,VestoWIN Klassik 170-220, VestoWIN Premium 200-202	0	9999999999999
780	000280	KSL194 Cleaning brush (680x80/57x40) for FKU,ZHN,KSN,ZHL,KS,FKX,VestoWIN Klassik 170-220, VestoWIN Premium 200-202	0	9999999999999
790	072192	Scratcher	0	9999999999999
800	067253	de: Ring für Rohrstutzen weiß für ZHN,KSN250 ZHN054	0	9999999999999
800	067938	de: Ring für Rohrstutzen braun für ZHN,KSN250 ZHN254	0	9999999999999
820	072249	KSL051 Smoke pipe (Ø=130mm) for KSL15/20,ZHN16,KSN160/200/150, VestoWIN Premium 170	0	9999999999999
830	068853	de: Rostauflage für ZHN 160/162	0	9999999999999
840	066753	Rear wall for ZHN162/212,VestoWIN Premium 202	0	9999999999999
850	080861	de: Rüttelachse (D16x133) KSN,ZHN KSN0051	0	9999999999999
860	000396	de: Rüttelrost (360x230mm) für ZHN160/162	0	9999999999999
865	008885	Locking pin, black Nr: 00910-000-000 FKN088, HMX,NBL,E/SKX,FKX	0	9999999999999
868	067911	Flue protection plate for ZHN, VestoWIN Premium 200-202	0	9999999999999
870	075183	de: Seitenwand links weiß kpl. KSN,ZHN	0	9999999999999
870	082147	de: Seitenwand links braun KSN/ZHN	0	9999999999999
890	075191	de: Seitenwand rechts weiß kpl. KSN,ZHN	0	9999999999999
890	082163	de: Seitenwand rechts braun KSN,ZHN	0	9999999999999
910	068764	de: Sockel für ZHN 162	0	9999999999999

Item no.	Article no.	Description	Serialnumber from	Serialnumber t
920	060602	de: Spindelmutter hinten Nr: 3-390-00388 für ZHN 160/162	0	9999999999999
930	068519	de: Spindelmutter vorne Nr: 3-390-00388 für ZHN 160/162	0	9999999999999
935	082015	de: Stehrost für KSN 160/200/150, ZHN	0	9999999999999
940	072222	Poker (D9x750) for KSL,ZHL,ZHN,KSN,VestoWIN Klassik 170-220, VestoWIN Premium 200-202	0	9999999999999
950	004197	KSN094 WAF Plug no.290 5/4" for ZHN,KSN,Vesto WIN Klassik 170-220, VestoWIN Premium 200-202	0	9999999999999
960	005452	OK-915 Immersion sleeve (129 mm) No.55501.04 for EKX,OK/E,GWX,KSN,ZHN,OK-915,ETX,SNX,FKX,MIRA,FireWIN,VestoWIN Klassik 170-220,	0	9999999999999
970	004049	KSN027 Thermometer Z.Nr.SK 2014 IFC 52-052 KRF for ZHN,OEX,KSN,ASN,NBE,VestoWIN Premium 200-202, VestoWIN Klassik 170-220, fitting	0	9999999999999
980	054003	de: Glasscheibe inkl. Thermometer für Backrohrtüre ZHN und VEP bis 01/2014	0	9999999999999
990	010421	KSN100 Thermostat minimal 716 RU-9289 0-95 Grades for FK,GWX,KSN,ZHN,GSX,ETX,SNX,FKX,VestoWIN Klassik 170-220, VestoWIN Premium 20	0	9999999999999
1000	067199	Oven dividing/insulating wall for VestoWIN Premium 200-202	0	9999999999999
1010	067113	Dividing wall top for ZHN162/212,VestoWIN Premium 202	0	9999999999999
1020	067180	Dividing wall between boiler and oven for ZHN, VestoWIN Premium 200-202	0	9999999999999
1030	048063	de: Türscharnier links inkl.Schrauben für Backrohr ZHN	0	9999999999999
1040	048065	de: Türscharnier rechts inkl.Schrauben für Backrohr ZHN	0	9999999999999
1050	061840	KSN022 Door catch for KSN,ZHN,PMX, VestoWIN Premium 200-202, VestoWIN Klassik 170-220	0	9999999999999
1060	004413	KSN099 Union nut no.374 5/4“ for VestoWIN Premium 200-202, VestoWIN Klassik 170-220	0	9999999999999
1070	066397	de: Vorderwand für Backrohr für ZHN 162/212	0	9999999999999
1080	069000	de: Wandabschlußleiste rechte (954x108x1,25) für ZHN 162	0	9999999999999
1085	080985	de: Welle für Drosselklappe (D8x253) KSN150/160/200,ZHN16	0	9999999999999
1090	004006	KSN097 Bracket no.92 3/8“ for ZHN,KSN,VestoWIN Klassik 170-220, VestoWIN Premium 200-202	0	9999999999999

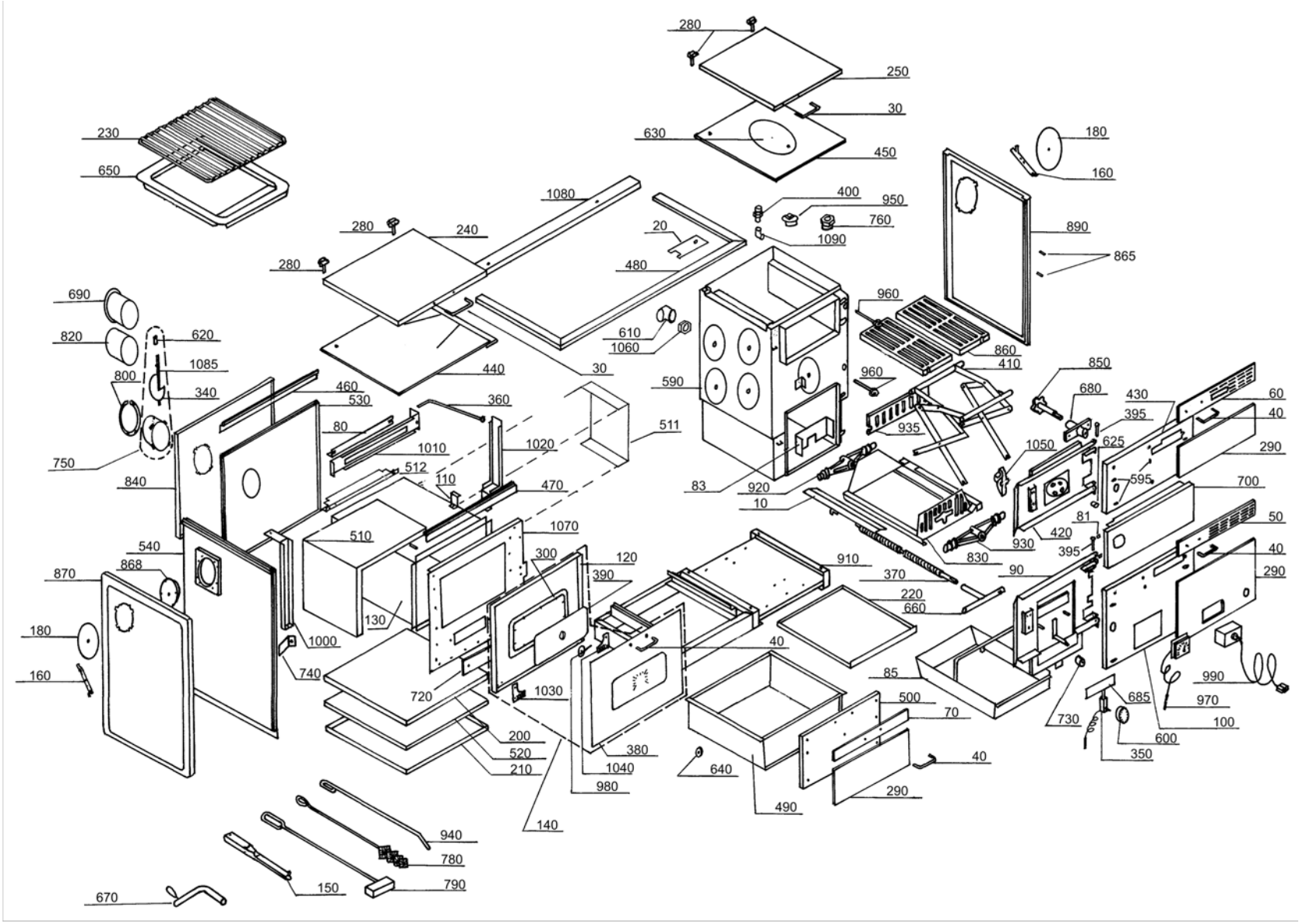
280
250
30
630
450
180
160
230
650
1080
400
950
760
1090
890
865
280
240
20
280
480
690
960
820
620
610
1060
860
410
1085
800
440
30
590
960
850
340
460
530
360
680
430
60
395
40
80
511
935
1010
1020
1050
625
290
750
512
110
470
83
920
595
700
840
10
81
50
1070
510
420
930
540
300
120
910
830
395
40
868
390
370
90
290
870
220
660
130
180
1000
40
85
990
160
740
720
1030
500
685
970
70
730
100
200
380
600
520
1040
640
40
350
210
980
290
490
140
940
780
150
790
670

Item no.	Article no.	Description	Serialnumber from	Serialnumber t
10	081582	Cover for threaded spindle for KSN,ZHN,VestoWIN Klassik 170-220	0	9999999999999
20	076031	de: Abdeckung für Herdrahmen für ZHN,ZHL 160	0	9999999999999
30	004332	de: Alu-Griff LA 130mm,SH 45mm BR Deckel KSN,ZHN	0	9999999999999
36	025925	de: Knopf für Zweitluft D10x10 elox. KSN/ZHN	0	9999999999999
40	000477	Aluminium handle for VarioWIN	0	9999999999999
40	004340	de: Alu-Griff LA 130mm,SH 35mm BR, ZHN,KSN,ASN/E	0	9999999999999
50	000523	de: Alu-Türgriffblende (338mm) ZHN 160/162 Aschetür	0	9999999999999
60	000515	de: Alu-Türgriffblende (338mm) ZHN 160/162 Heiztür ZHN924	0	9999999999999
70	004693	de: Alu-Türgriffblende ZHN Holzlade	0	9999999999999
80	067121	Heating flap for ZHL,ZHN,VestoWIN Premium 200-202 ZHN036	0	9999999999999
81	008893	de: Arretierung schwarz E/SKX,HMX,FKX,MIRA	0	9999999999999
83	081507	de: Aschekippblech (254x82x3) für KSN150/160/200 KSN110	0	9999999999999
85	080810	de: Aschelade für ZHN, KSN150/160/200	0	9999999999999
90	089818	de: Aschetür für ZHN162 ZHN812	0	9999999999999
100	089826	de: Aschetürbombe für ZHN162	0	9999999999999
110	069418	de: Auflage für Anheizklappe (39x33x1,5) ZHN 160/162	0	9999999999999
120	065005	de: Backrohr Innentür für ZHN	0	9999999999999
130	050301	Oven set for ZHN	0	9999999999999
140	085448	de: Backrohrtür für ZHN	0	9999999999999
150	073407	Operating handle for FKV,KSL,ZHL,FKN,FAX,ZHN,KSN,FKH,HMX,VestoWIN Premium 200-202, VestoWIN Klassik 170-220	0	9999999999999
160	080098	KSN0341 Fastening clip for dummy washer for HN,KSN,ASN/E, fittings cabinet Vesto 200	0	9999999999999
170	067911	Flue protection plate for ZHN, VestoWIN Premium 200-202	0	9999999999999
180	081221	de: Blindscheibe weiß für ASN,KSN,ZHN KSN134	0	9999999999999
180	082198	de: Blindscheibe braun für KSN,ASN,ZHN	0	9999999999999
200	066834	Buttom for ZHN,VEP	0	9999999999999
210	066842	Bottom for ZHN,VEP	0	9999999999999
220	069086	de: Bodentasse (498x316x0,9) für ZHN 160/162	0	9999999999999
230	003174	Grid iron for ZHN, VestoWIN Premium 200-202	0	9999999999999
240	040800	de: Deckel weiß für ZHN Backrohrseite	0	9999999999999
240	086509	de: Deckel braun für ZHN Backrohrseite	0	9999999999999
250	086576	de: Deckel weiß ZHN162 Kesselse.u.ZHN182 Abgasanschluß oben	0	9999999999999
250	089761	de: Deckel braun ZHN162 Kessel u. ZHN182 Abgasanschluß oben	0	9999999999999
280	004308	Cover hinge for KSN/ZHN, VestoWIN Klassik 170-220, VestoWIN Premium 200-202	0	9999999999999
290	503108	de: ZHN073 Dekor rotbraun zu ZHN162	0	9999999999999
290	503110	de: ZHN076 Dekor weiß zu ZHN162	0	9999999999999
290	503111	de: ZHN077 Dekor sahara-beige zu ZHN162	0	9999999999999
290	503112	de: ZHN078 Dekor braun-beige zu ZHN162	0	9999999999999
290	503114	de: ZHN080 Dekor dunkelbraun zu ZHN162	0	9999999999999
300	004928	Glass fibre cord 5/5mm for FireWIN, ZHN, VestoWIN Premium 200-202	0	9999999999999
340	041694	Throttle flap for KSN150/160/200,ZHN160/162, VestoWIN Klassik 170	0	9999999999999
350	004030	Combustion controlling mechanism for KSN,ZHN,FKV,VestoWIN Klassik 170-220, VestoWIN Premium 200-202	0	9999999999999
360	067148	Heating flap linkage for ZHN162/212, ZHN0364, VestoWIN Premium 202	0	9999999999999
370	081213	Threaded spindle (Ø20x377) for KSN,ZHN,VestoWIN Klassik 170-220, VestoWIN Premium 200-202	0	9999999999999
380	067703	de: Glasscheibe außen für ZHN-Backrohrtüre (543x383mm)	0	9999999999999
390	054003	de: Glasscheibe inkl. Thermometer für Backrohrtüre ZHN und VEP bis 01/2014	0	9999999999999
395	012998	de: HR-Stifte 6X41 gerändelt KSN,ZHN	0	9999999999999
400	004863	Manually operated bleeder VFR 3/8" for ZHN,KSN,GKW,NBE115,GKA/E,VestoWIN Klassik 170-220, VestoWIN Premium 200-202	0	9999999999999
410	069116	de: Hebeschere für ZHN 160/162	0	9999999999999
420	089729	de: Heiztür für ZHN 162	0	9999999999999
430	089702	de: Heiztürbombe für ZHN162	0	9999999999999
440	004626	Oven hot plate (547x505x7mm) for ZHN162/182/212 ZHN0621, VestoWIN Premium 202	0	9999999999999

Item no.	Article no.	Description	Serialnumber from	Serialnumber t
440	048172	Hot plate - flue tube top for VestoWIN Premium 202	0	9999999999999
450	051756	de: Herdplatte (505x317x7mm) zu Kesselseite für ZHN160/162	0	9999999999999
460	067598	de: Herdplattenauflage hinten für ZHN	0	9999999999999
470	067644	Hot plate support front for ZHN066, VestoWIN Premium 200-202	0	9999999999999
480	068748	de: Herdrahmen (1999x70x1,25) für ZHN160/162	0	9999999999999
490	050189	de: Holzlade mit Rollen für ZHN, VEP bis SN:104999	0	9999999999999
500	085421	de: Holzladebombe braun für ZHN	0	9999999999999
510	067091	Insolate sheet for ZHN	0	9999999999999
511	075442	Oven cover plate side for VestoWIN Premium 200-202	0	9999999999999
512	075450	de: Isolierblech hinten Backrohr ZHN (405X126X1-1,25)	0	9999999999999
520	060383	de: Isolierung für Backrohrboden für ZHN *ZHN0831	0	9999999999999
530	066818	Insolate rear wall ZHN162/212,VEP202 to lot 4	0	9999999999999
540	066885	Insolate sidewards ZHN162/212,VEP202	0	9999999999999
590	060581	de: Kessel ZHN 162 (Ausführung mit Rauchabzug rechts)	0	9999999999999
591	060288	de: Zubehör für Kesseltausch für ZHN	0	9999999999999
595	023949	de: Hutfix SCO 6820 VERZ/GE Klammern Dekor ASN,ZHN,KSN,OEX	0	9999999999999
600	004057	Knob no.30.298-002-001 for ZHN,FKV,VestoWIN Klassik 170-220, VestoWIN Premium 200-202	0	9999999999999
610	012513	Knee no.95T 5/4“ for KSN, VestoWIN Premium 200-202, VestoWIN Klassik 170-220	0	9999999999999
620	023906	Throttle flap button (D10x15) for KSN,ZHN,VestoWIN Klassik 170-220, VestoWIN Premium 200-202	0	9999999999999
625	025925	de: Knopf für Zweitluft D10x10 elox. KSN/ZHN	0	9999999999999
630	056780	Smoke hole cover (Ø=220mm) for ZHN,KSN,KSL,VestoWIN Klassik 170-220	0	9999999999999
640	085332	de: Kohleladerad für Holzlade inkl.Schraube für ZHN,ZH	0	9999999999999
650	047084	Baking tray for ZHL,ZHN,VestoWIN Premium 200-202	0	9999999999999
660	081094	de: Kurbel für Hebevorrichtung für ZHN,KSN KSN192	0	9999999999999
670	085146	Crank for vibration device and grate lifting equipment for KSN,ZHN,VestoWIN Klassik 170-220	0	9999999999999
680	068977	de: Lagerbock für Rüttelachse für ZHN160/162	0	9999999999999
685	072362	de: Luftklappe für Feuerungsregler (191x82x0,75) für KSL,ZHL KSL317 ZHN,KSN150/160/200	0	9999999999999
690	072230	Wall support for ZHN16,KSN160/200/150, VestoWIN Klassik 170	0	9999999999999
700	064048	de: Mittelblende weiß für ZHN 160/162	0	9999999999999
700	069019	de: Mittelblende braun für ZHN160/162	0	9999999999999
720	066613	de: Reinigungstür für ZHN	0	9999999999999
730	004065	KSN809 Knurled button for ZHN,KSN,VestoWIN Klassik 170-220, VestoWIN Premium 200-202, EasyWIN Klassik/Premium 180	0	9999999999999
740	067296	Flue gas baffle plate for ZHN, VestoWIN Premium 200-202	0	9999999999999
750	089850	de: Rauchrohrstutzen mit Drosselklappe für ZHN160/162	0	9999999999999
760	004014	KSN095 241 5/4“-1“ reduction nipple, black for KSN,ZHN,VestoWIN Klassik 170-220, VestoWIN Premium 200-202	0	9999999999999
780	000280	KSL194 Cleaning brush (680x80/57x40) for FKU,ZHN,KSN,ZHL,KS,FKX,VestoWIN Klassik 170-220, VestoWIN Premium 200-202	0	9999999999999
790	072192	Scratcher	0	9999999999999
800	067253	de: Ring für Rohrstutzen weiß für ZHN,KSN250 ZHN054	0	9999999999999
800	067938	de: Ring für Rohrstutzen braun für ZHN,KSN250 ZHN254	0	9999999999999
820	072249	KSL051 Smoke pipe (Ø=130mm) for KSL15/20,ZHN16,KSN160/200/150, VestoWIN Premium 170	0	9999999999999
830	068853	de: Rostauflage für ZHN 160/162	0	9999999999999
840	066753	Rear wall for ZHN162/212,VestoWIN Premium 202	0	9999999999999
850	080861	de: Rüttelachse (D16x133) KSN,ZHN KSN0051	0	9999999999999
860	000396	de: Rüttelrost (360x230mm) für ZHN160/162	0	9999999999999
865	008885	Locking pin, black Nr: 00910-000-000 FKN088, HMX,NBL,E/SKX,FKX	0	9999999999999
868	067911	Flue protection plate for ZHN, VestoWIN Premium 200-202	0	9999999999999
870	075183	de: Seitenwand links weiß kpl. KSN,ZHN	0	9999999999999
870	082147	de: Seitenwand links braun KSN/ZHN	0	9999999999999
890	075191	de: Seitenwand rechts weiß kpl. KSN,ZHN	0	9999999999999
890	082163	de: Seitenwand rechts braun KSN,ZHN	0	9999999999999
910	068764	de: Sockel für ZHN 162	0	9999999999999

Item no.	Article no.	Description	Serialnumber from	Serialnumber t
920	060602	de: Spindelmutter hinten Nr: 3-390-00388 für ZHN 160/162	0	9999999999999
930	068519	de: Spindelmutter vorne Nr: 3-390-00388 für ZHN 160/162	0	9999999999999
935	082015	de: Stehrost für KSN 160/200/150, ZHN	0	9999999999999
940	072222	Poker (D9x750) for KSL,ZHL,ZHN,KSN,VestoWIN Klassik 170-220, VestoWIN Premium 200-202	0	9999999999999
950	004197	KSN094 WAF Plug no.290 5/4" for ZHN,KSN,Vesto WIN Klassik 170-220, VestoWIN Premium 200-202	0	9999999999999
960	005452	OK-915 Immersion sleeve (129 mm) No.55501.04 for EKX,OK/E,GWX,KSN,ZHN,OK-915,ETX,SNX,FKX,MIRA,FireWIN,VestoWIN Klassik 170-220,	0	9999999999999
970	004049	KSN027 Thermometer Z.Nr.SK 2014 IFC 52-052 KRF for ZHN,OEX,KSN,ASN,NBE,VestoWIN Premium 200-202, VestoWIN Klassik 170-220, fitting	0	9999999999999
980	054003	de: Glasscheibe inkl. Thermometer für Backrohrtüre ZHN und VEP bis 01/2014	0	9999999999999
990	010421	KSN100 Thermostat minimal 716 RU-9289 0-95 Grades for FK,GWX,KSN,ZHN,GSX,ETX,SNX,FKX,VestoWIN Klassik 170-220, VestoWIN Premium 20	0	9999999999999
1000	067199	Oven dividing/insulating wall for VestoWIN Premium 200-202	0	9999999999999
1010	067113	Dividing wall top for ZHN162/212,VestoWIN Premium 202	0	9999999999999
1020	067180	Dividing wall between boiler and oven for ZHN, VestoWIN Premium 200-202	0	9999999999999
1030	048063	de: Türscharnier links inkl.Schrauben für Backrohr ZHN	0	9999999999999
1040	048065	de: Türscharnier rechts inkl.Schrauben für Backrohr ZHN	0	9999999999999
1050	061840	KSN022 Door catch for KSN,ZHN,PMX, VestoWIN Premium 200-202, VestoWIN Klassik 170-220	0	9999999999999
1060	004413	KSN099 Union nut no.374 5/4“ for VestoWIN Premium 200-202, VestoWIN Klassik 170-220	0	9999999999999
1070	066397	de: Vorderwand für Backrohr für ZHN 162/212	0	9999999999999
1080	069000	de: Wandabschlußleiste rechte (954x108x1,25) für ZHN 162	0	9999999999999
1085	080985	de: Welle für Drosselklappe (D8x253) KSN150/160/200,ZHN16	0	9999999999999
1090	004006	KSN097 Bracket no.92 3/8“ for ZHN,KSN,VestoWIN Klassik 170-220, VestoWIN Premium 200-202	0	9999999999999

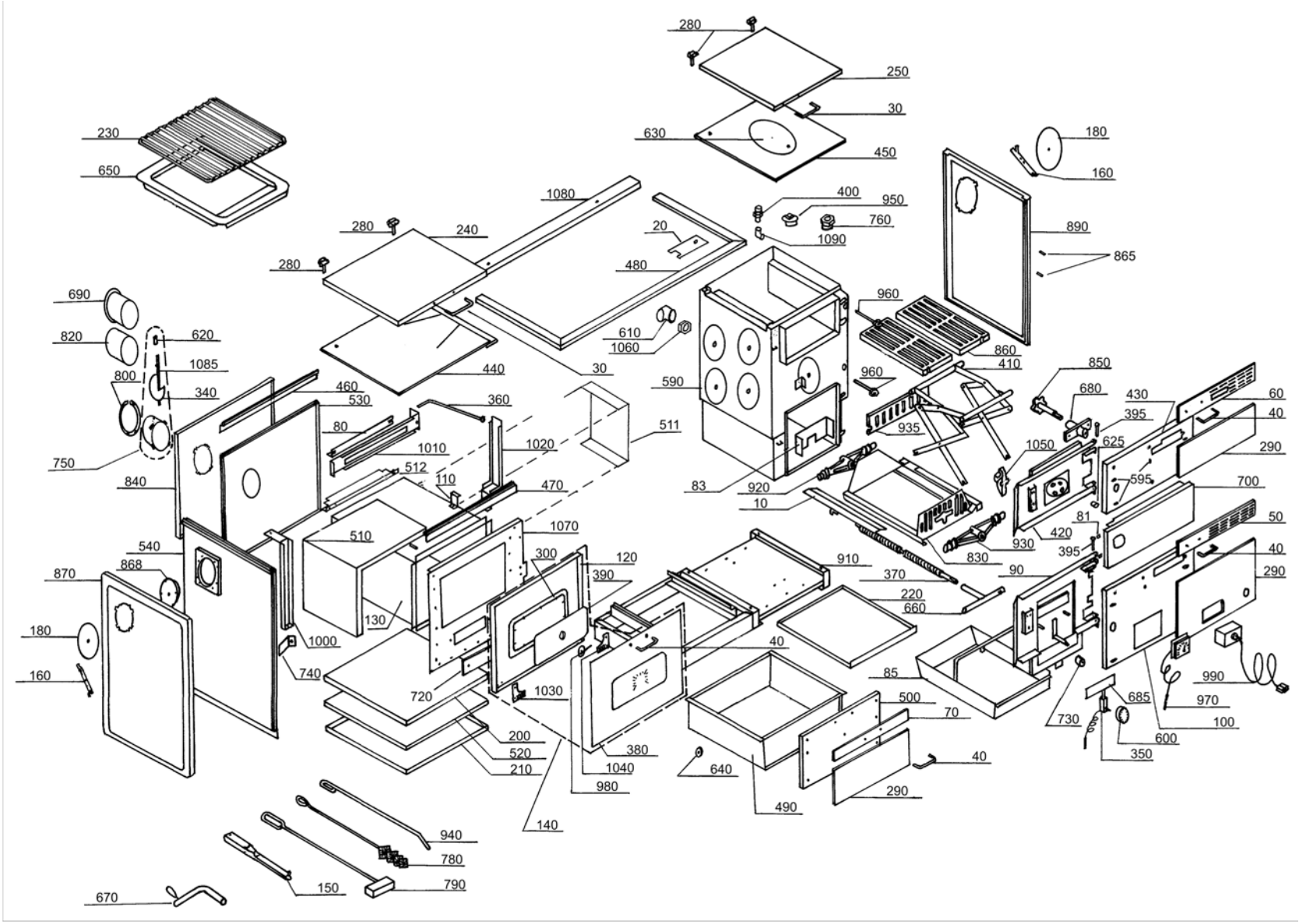
280
250
30
630
450
180
160
230
650
1080
400
950
760
1090
890
865
280
240
20
280
480
690
960
820
620
610
1060
860
410
1085
800
440
30
590
960
850
340
460
530
360
680
430
60
395
40
80
511
935
1010
1020
1050
625
290
750
512
110
470
83
920
595
700
840
10
81
50
1070
510
420
930
540
300
120
910
830
395
40
868
390
370
90
290
870
220
660
130
180
1000
40
85
990
160
740
720
1030
500
685
970
70
730
100
200
380
600
520
1040
640
40
350
210
980
290
490
140
940
780
150
790
670

Item no.	Article no.	Description	Serialnumber from	Serialnumber t
10	081582	Cover for threaded spindle for KSN,ZHN,VestoWIN Klassik 170-220	0	9999999999999
20	075574	Oven frame cover for VestoWIN Premium 200-202	0	9999999999999
30	004332	de: Alu-Griff LA 130mm,SH 45mm BR Deckel KSN,ZHN	0	9999999999999
36	025925	de: Knopf für Zweitluft D10x10 elox. KSN/ZHN	0	9999999999999
40	004340	de: Alu-Griff LA 130mm,SH 35mm BR, ZHN,KSN,ASN/E	0	9999999999999
50	004162	de: Alu-Türgriffblende eloxiert ZHN,KSN150/160/200 Heiztür	0	9999999999999
60	004634	de: Alu-Türgriffblende eloxiert KSN,ZHN 21 HT	0	9999999999999
70	004693	de: Alu-Türgriffblende ZHN Holzlade	0	9999999999999
80	067121	Heating flap for ZHL,ZHN,VestoWIN Premium 200-202 ZHN036	0	9999999999999
81	008893	de: Arretierung schwarz E/SKX,HMX,FKX,MIRA	0	9999999999999
83	081507	de: Aschekippblech (254x82x3) für KSN150/160/200 KSN110	0	9999999999999
85	080810	de: Aschelade für ZHN, KSN150/160/200	0	9999999999999
90	085294	de: Aschetür für ZHN 210	0	9999999999999
100	085383	de: Aschetürbombe für ZHN 210 (Ausführung Rauchabzug links)	0	9999999999999
110	069418	de: Auflage für Anheizklappe (39x33x1,5) ZHN 160/162	0	9999999999999
120	065005	de: Backrohr Innentür für ZHN	0	9999999999999
130	050301	Oven set for ZHN	0	9999999999999
140	085448	de: Backrohrtür für ZHN	0	9999999999999
150	073407	Operating handle for FKV,KSL,ZHL,FKN,FAX,ZHN,KSN,FKH,HMX,VestoWIN Premium 200-202, VestoWIN Klassik 170-220	0	9999999999999
160	080098	KSN0341 Fastening clip for dummy washer for HN,KSN,ASN/E, fittings cabinet Vesto 200	0	9999999999999
170	067911	Flue protection plate for ZHN, VestoWIN Premium 200-202	0	9999999999999
180	081221	de: Blindscheibe weiß für ASN,KSN,ZHN KSN134	0	9999999999999
180	082198	de: Blindscheibe braun für KSN,ASN,ZHN	0	9999999999999
200	066834	Buttom for ZHN,VEP	0	9999999999999
210	066842	Bottom for ZHN,VEP	0	9999999999999
220	080500	Ground tray (498x416x0,9) for ZHN,KSN150/160/200, VestoWIN Premium 200-202, VestoWIN Klassik 170	0	9999999999999
230	003174	Grid iron for ZHN, VestoWIN Premium 200-202	0	9999999999999
240	040800	de: Deckel weiß für ZHN Backrohrseite	0	9999999999999
240	086509	de: Deckel braun für ZHN Backrohrseite	0	9999999999999
250	040878	de: Deckel weiß ZHN 210 Kesselseite	0	9999999999999
250	085367	de: Deckel braun für ZHN 210 Kesselseite	0	9999999999999
280	004308	Cover hinge for KSN/ZHN, VestoWIN Klassik 170-220, VestoWIN Premium 200-202	0	9999999999999
290	503077	ZHN003 Dekor rotbraun zu ZHN 180/182	0	9999999999999
290	503079	ZHN006 Pearl white ZHN 180/182	0	9999999999999
290	503080	ZHN007 Sahara beige ZHN 180/182	0	9999999999999
290	503081	ZHN008 Brown beige ZHN 180/182	0	9999999999999
290	503083	ZHN010 Dark brown ZHN 180/182	0	9999999999999
300	004928	Glass fibre cord 5/5mm for FireWIN, ZHN, VestoWIN Premium 200-202	0	9999999999999
340	041693	Throttle flap for KSN210/250,ZHN18/21,VestoWIN Klassik 220	0	9999999999999
350	004030	Combustion controlling mechanism for KSN,ZHN,FKV,VestoWIN Klassik 170-220, VestoWIN Premium 200-202	0	9999999999999
360	067326	Heating flap linkage for ZHN160/210, VestoWIN Premium 200	0	9999999999999
370	081213	Threaded spindle (Ø20x377) for KSN,ZHN,VestoWIN Klassik 170-220, VestoWIN Premium 200-202	0	9999999999999
380	067703	de: Glasscheibe außen für ZHN-Backrohrtüre (543x383mm)	0	9999999999999
390	054003	de: Glasscheibe inkl. Thermometer für Backrohrtüre ZHN und VEP bis 01/2014	0	9999999999999
395	012998	de: HR-Stifte 6X41 gerändelt KSN,ZHN	0	9999999999999
400	004863	Manually operated bleeder VFR 3/8" for ZHN,KSN,GKW,NBE115,GKA/E,VestoWIN Klassik 170-220, VestoWIN Premium 200-202	0	9999999999999
410	080675	Lifting jack for ZHN,KSN160/200/150, VestoWIN Premium 200-202, VestoWIN Klassik 170	0	9999999999999
420	085340	de: Heiztür für ZHN 210	0	9999999999999
430	085405	de: Heiztürbombe für ZHN 210	0	9999999999999
440	004618	Oven hot plate (547x505x7mm) for ZHN160/180/210, VestoWIN Premium 200	0	9999999999999
440	048171	Hot plate - flue tube top for VestoWIN Premium 200	0	9999999999999

Item no.	Article no.	Description	Serialnumber from	Serialnumber t
450	004081	Boiler hot plate (418x505x7mm) for KSN160/200/150,ZHN18/21, VestoWIN Premium 200-202, VestoWIN Klassik 170	0	9999999999999
460	067598	de: Herdplattenauflage hinten für ZHN	0	9999999999999
470	067644	Hot plate support front for ZHN066, VestoWIN Premium 200-202	0	9999999999999
480	066710	Oven frame for ZHN210/212/180/182/173, VestoWIN Premium 200-202	0	9999999999999
490	050189	de: Holzlade mit Rollen für ZHN, VEP bis SN:104999	0	9999999999999
500	085421	de: Holzladebombe braun für ZHN	0	9999999999999
510	067091	Insolate sheet for ZHN	0	9999999999999
511	075442	Oven cover plate side for VestoWIN Premium 200-202	0	9999999999999
512	075450	de: Isolierblech hinten Backrohr ZHN (405X126X1-1,25)	0	9999999999999
520	060383	de: Isolierung für Backrohrboden für ZHN *ZHN0831	0	9999999999999
530	066826	de: Isolierwand hinten ZHN160/210,VEP200 bis SN: 104999	0	9999999999999
540	066893	de: Isolierwand seitlich für ZHN160/210,VEP200	0	9999999999999
590	060378	de: Kessel für ZHN 210/180 (Rauchabzug links)	0	9999999999999
591	060288	de: Zubehör für Kesseltausch für ZHN	0	9999999999999
595	023949	de: Hutfix SCO 6820 VERZ/GE Klammern Dekor ASN,ZHN,KSN,OEX	0	9999999999999
600	004057	Knob no.30.298-002-001 for ZHN,FKV,VestoWIN Klassik 170-220, VestoWIN Premium 200-202	0	9999999999999
610	012513	Knee no.95T 5/4“ for KSN, VestoWIN Premium 200-202, VestoWIN Klassik 170-220	0	9999999999999
620	023906	Throttle flap button (D10x15) for KSN,ZHN,VestoWIN Klassik 170-220, VestoWIN Premium 200-202	0	9999999999999
625	025925	de: Knopf für Zweitluft D10x10 elox. KSN/ZHN	0	9999999999999
630	056780	Smoke hole cover (Ø=220mm) for ZHN,KSN,KSL,VestoWIN Klassik 170-220	0	9999999999999
640	085332	de: Kohleladerad für Holzlade inkl.Schraube für ZHN,ZH	0	9999999999999
650	047084	Baking tray for ZHL,ZHN,VestoWIN Premium 200-202	0	9999999999999
660	081094	de: Kurbel für Hebevorrichtung für ZHN,KSN KSN192	0	9999999999999
670	085146	Crank for vibration device and grate lifting equipment for KSN,ZHN,VestoWIN Klassik 170-220	0	9999999999999
680	081043	de: Lagerbock für Rüttelachse für KSN,ZHN180/182,210/212	0	9999999999999
685	072362	de: Luftklappe für Feuerungsregler (191x82x0,75) für KSL,ZHL KSL317 ZHN,KSN150/160/200	0	9999999999999
690	075752	Wall support for KSL25,ZHL,KSN250,ZHN18/21,VestoWIN Klassik 220, VestoWIN Premium 200-202	0	9999999999999
700	066961	de: Mittelblende weiß für ZHN 210/212	0	9999999999999
700	067202	de: Mittelblende braun für ZHN 210/212 ZHN225	0	9999999999999
720	066613	de: Reinigungstür für ZHN	0	9999999999999
730	004065	KSN809 Knurled button for ZHN,KSN,VestoWIN Klassik 170-220, VestoWIN Premium 200-202, EasyWIN Klassik/Premium 180	0	9999999999999
740	067296	Flue gas baffle plate for ZHN, VestoWIN Premium 200-202	0	9999999999999
750	085472	Flue outlet with throttle flap for VestoWIN Premium 200-202	0	9999999999999
760	004014	KSN095 241 5/4“-1“ reduction nipple, black for KSN,ZHN,VestoWIN Klassik 170-220, VestoWIN Premium 200-202	0	9999999999999
780	000280	KSL194 Cleaning brush (680x80/57x40) for FKU,ZHN,KSN,ZHL,KS,FKX,VestoWIN Klassik 170-220, VestoWIN Premium 200-202	0	9999999999999
790	072192	Scratcher	0	9999999999999
800	067253	de: Ring für Rohrstutzen weiß für ZHN,KSN250 ZHN054	0	9999999999999
800	067938	de: Ring für Rohrstutzen braun für ZHN,KSN250 ZHN254	0	9999999999999
820	075744	KSL411 Smoke pipe for KSL25,ZHL,ZHN21/18,KSN250,VestoWIN Klassik 220	0	9999999999999
830	080292	KSN019 Grate support complete for ZHN,KSN160/200/150, VestoWIN Premium 200-202, VestoWIN Klassik 170	0	9999999999999
840	066761	Rear wall for ZHN160/210,VestoWIN Premium 200	0	9999999999999
850	080861	de: Rüttelachse (D16x133) KSN,ZHN KSN0051	0	9999999999999
860	004138	de: Rüttelrost (Mod.1-322-261) ZHN18/21,KSN150/200	0	9999999999999
865	008885	Locking pin, black Nr: 00910-000-000 FKN088, HMX,NBL,E/SKX,FKX	0	9999999999999
868	067911	Flue protection plate for ZHN, VestoWIN Premium 200-202	0	9999999999999
870	075183	de: Seitenwand links weiß kpl. KSN,ZHN	0	9999999999999
870	082147	de: Seitenwand links braun KSN/ZHN	0	9999999999999
890	075191	de: Seitenwand rechts weiß kpl. KSN,ZHN	0	9999999999999
890	082163	de: Seitenwand rechts braun KSN,ZHN	0	9999999999999
910	067792	de: Sockel schwarz für ZHN 210	0	9999999999999
920	060558	Nut for lifting equipment rear for ZHN210/212,KSN160/200/150,VestoWIN Klassik 170, VestoWIN Premium 200-202	0	9999999999999

Item no.	Article no.	Description	Serialnumber from	Serialnumber t
930	081485	Nut for lifting equipment front for ZHN210/212,KSN160/200/150,VestoWIN Klassik 170, VestoWIN Premium 200-202	0	9999999999999
935	082015	de: Stehrost für KSN 160/200/150, ZHN	0	9999999999999
940	072222	Poker (D9x750) for KSL,ZHL,ZHN,KSN,VestoWIN Klassik 170-220, VestoWIN Premium 200-202	0	9999999999999
950	004197	KSN094 WAF Plug no.290 5/4" for ZHN,KSN,Vesto WIN Klassik 170-220, VestoWIN Premium 200-202	0	9999999999999
960	005452	OK-915 Immersion sleeve (129 mm) No.55501.04 for EKX,OK/E,GWX,KSN,ZHN,OK-915,ETX,SNX,FKX,MIRA,FireWIN,VestoWIN Klassik 170-220,	0	9999999999999
970	004049	KSN027 Thermometer Z.Nr.SK 2014 IFC 52-052 KRF for ZHN,OEX,KSN,ASN,NBE,VestoWIN Premium 200-202, VestoWIN Klassik 170-220, fitting	0	9999999999999
980	054003	de: Glasscheibe inkl. Thermometer für Backrohrtüre ZHN und VEP bis 01/2014	0	9999999999999
990	010421	KSN100 Thermostat minimal 716 RU-9289 0-95 Grades for FK,GWX,KSN,ZHN,GSX,ETX,SNX,FKX,VestoWIN Klassik 170-220, VestoWIN Premium 20	0	9999999999999
1000	067199	Oven dividing/insulating wall for VestoWIN Premium 200-202	0	9999999999999
1010	067040	Dividing wall top for ZHN160/210,VestoWIN Premium 200	0	9999999999999
1020	067180	Dividing wall between boiler and oven for ZHN, VestoWIN Premium 200-202	0	9999999999999
1030	048063	de: Türscharnier links inkl.Schrauben für Backrohr ZHN	0	9999999999999
1040	048065	de: Türscharnier rechts inkl.Schrauben für Backrohr ZHN	0	9999999999999
1050	061840	KSN022 Door catch for KSN,ZHN,PMX, VestoWIN Premium 200-202, VestoWIN Klassik 170-220	0	9999999999999
1060	004413	KSN099 Union nut no.374 5/4“ for VestoWIN Premium 200-202, VestoWIN Klassik 170-220	0	9999999999999
1070	066745	de: Vorderwand für Backrohr für ZHN 160/210	0	9999999999999
1080	067679	Wall end plate (105x108x1,25) for ZHN210, VestoWIN Premium 200	0	9999999999999
1085	066567	KSN9492 Throttle flap shaft for KSN210/250,ZHN18/21,VestoWIN Klassik 170-220, VestoWIN Premium 200-202	0	9999999999999
1090	004006	KSN097 Bracket no.92 3/8“ for ZHN,KSN,VestoWIN Klassik 170-220, VestoWIN Premium 200-202	0	9999999999999

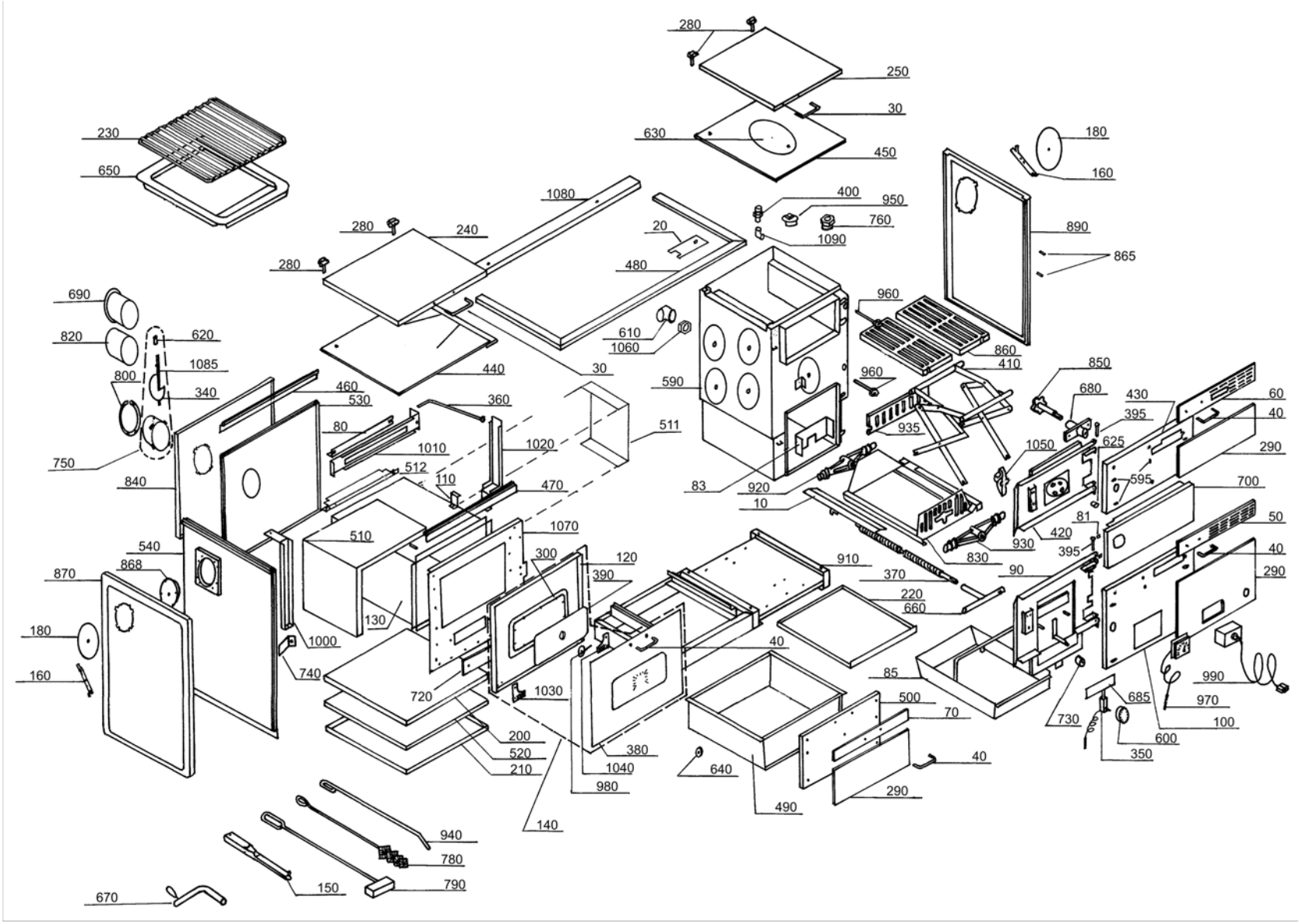
280
250
30
630
450
180
160
230
650
1080
400
950
760
1090
890
865
280
240
20
480
280
690
820
620
1085
800
340
460
530
440
30
610
1060
960
860
410
850
680
430
395
60
40
290
590
960
935
1050
625
595
700
750
840
80
1010
512
110
1020
360
511
470
83
920
10
81
420
930
830
395
50
40
290
540
868
870
510
1070
300
120
390
910
370
220
660
90
180
160
130
1000
740
720
1030
40
85
500
70
730
685
990
970
100
600
350
200
520
210
380
1040
980
640
490
40
290
140
940
780
790
150
670

Item no.	Article no.	Description	Serialnumber from	Serialnumber t
10	081582	Cover for threaded spindle for KSN,ZHN,VestoWIN Klassik 170-220	0	9999999999999
20	075574	Oven frame cover for VestoWIN Premium 200-202	0	9999999999999
30	004332	de: Alu-Griff LA 130mm,SH 45mm BR Deckel KSN,ZHN	0	9999999999999
36	025925	de: Knopf für Zweitluft D10x10 elox. KSN/ZHN	0	9999999999999
40	004340	de: Alu-Griff LA 130mm,SH 35mm BR, ZHN,KSN,ASN/E	0	9999999999999
50	004162	de: Alu-Türgriffblende eloxiert ZHN,KSN150/160/200 Heiztür	0	9999999999999
60	004634	de: Alu-Türgriffblende eloxiert KSN,ZHN 21 HT	0	9999999999999
70	004693	de: Alu-Türgriffblende ZHN Holzlade	0	9999999999999
80	067121	Heating flap for ZHL,ZHN,VestoWIN Premium 200-202 ZHN036	0	9999999999999
81	008893	de: Arretierung schwarz E/SKX,HMX,FKX,MIRA	0	9999999999999
83	081507	de: Aschekippblech (254x82x3) für KSN150/160/200 KSN110	0	9999999999999
85	080810	de: Aschelade für ZHN, KSN150/160/200	0	9999999999999
90	085294	de: Aschetür für ZHN 210	0	9999999999999
100	085383	de: Aschetürbombe für ZHN 210 (Ausführung Rauchabzug links)	0	9999999999999
110	069418	de: Auflage für Anheizklappe (39x33x1,5) ZHN 160/162	0	9999999999999
120	065005	de: Backrohr Innentür für ZHN	0	9999999999999
130	050301	Oven set for ZHN	0	9999999999999
140	085448	de: Backrohrtür für ZHN	0	9999999999999
150	073407	Operating handle for FKV,KSL,ZHL,FKN,FAX,ZHN,KSN,FKH,HMX,VestoWIN Premium 200-202, VestoWIN Klassik 170-220	0	9999999999999
160	080098	KSN0341 Fastening clip for dummy washer for HN,KSN,ASN/E, fittings cabinet Vesto 200	0	9999999999999
170	067911	Flue protection plate for ZHN, VestoWIN Premium 200-202	0	9999999999999
180	081221	de: Blindscheibe weiß für ASN,KSN,ZHN KSN134	0	9999999999999
180	082198	de: Blindscheibe braun für KSN,ASN,ZHN	0	9999999999999
200	066834	Buttom for ZHN,VEP	0	9999999999999
210	066842	Bottom for ZHN,VEP	0	9999999999999
220	080500	Ground tray (498x416x0,9) for ZHN,KSN150/160/200, VestoWIN Premium 200-202, VestoWIN Klassik 170	0	9999999999999
230	003174	Grid iron for ZHN, VestoWIN Premium 200-202	0	9999999999999
240	040800	de: Deckel weiß für ZHN Backrohrseite	0	9999999999999
240	086509	de: Deckel braun für ZHN Backrohrseite	0	9999999999999
250	040878	de: Deckel weiß ZHN 210 Kesselseite	0	9999999999999
250	085367	de: Deckel braun für ZHN 210 Kesselseite	0	9999999999999
280	004308	Cover hinge for KSN/ZHN, VestoWIN Klassik 170-220, VestoWIN Premium 200-202	0	9999999999999
290	503077	ZHN003 Dekor rotbraun zu ZHN 180/182	0	9999999999999
290	503079	ZHN006 Pearl white ZHN 180/182	0	9999999999999
290	503080	ZHN007 Sahara beige ZHN 180/182	0	9999999999999
290	503081	ZHN008 Brown beige ZHN 180/182	0	9999999999999
290	503083	ZHN010 Dark brown ZHN 180/182	0	9999999999999
300	004928	Glass fibre cord 5/5mm for FireWIN, ZHN, VestoWIN Premium 200-202	0	9999999999999
340	041693	Throttle flap for KSN210/250,ZHN18/21,VestoWIN Klassik 220	0	9999999999999
350	004030	Combustion controlling mechanism for KSN,ZHN,FKV,VestoWIN Klassik 170-220, VestoWIN Premium 200-202	0	9999999999999
360	067326	Heating flap linkage for ZHN160/210, VestoWIN Premium 200	0	9999999999999
370	081213	Threaded spindle (Ø20x377) for KSN,ZHN,VestoWIN Klassik 170-220, VestoWIN Premium 200-202	0	9999999999999
380	067703	de: Glasscheibe außen für ZHN-Backrohrtüre (543x383mm)	0	9999999999999
390	054003	de: Glasscheibe inkl. Thermometer für Backrohrtüre ZHN und VEP bis 01/2014	0	9999999999999
395	012998	de: HR-Stifte 6X41 gerändelt KSN,ZHN	0	9999999999999
400	004863	Manually operated bleeder VFR 3/8" for ZHN,KSN,GKW,NBE115,GKA/E,VestoWIN Klassik 170-220, VestoWIN Premium 200-202	0	9999999999999
410	080675	Lifting jack for ZHN,KSN160/200/150, VestoWIN Premium 200-202, VestoWIN Klassik 170	0	9999999999999
420	085340	de: Heiztür für ZHN 210	0	9999999999999
430	085405	de: Heiztürbombe für ZHN 210	0	9999999999999
440	004618	Oven hot plate (547x505x7mm) for ZHN160/180/210, VestoWIN Premium 200	0	9999999999999
440	048171	Hot plate - flue tube top for VestoWIN Premium 200	0	9999999999999

Item no.	Article no.	Description	Serialnumber from	Serialnumber t
450	004081	Boiler hot plate (418x505x7mm) for KSN160/200/150,ZHN18/21, VestoWIN Premium 200-202, VestoWIN Klassik 170	0	9999999999999
460	067598	de: Herdplattenauflage hinten für ZHN	0	9999999999999
470	067644	Hot plate support front for ZHN066, VestoWIN Premium 200-202	0	9999999999999
480	066710	Oven frame for ZHN210/212/180/182/173, VestoWIN Premium 200-202	0	9999999999999
490	050189	de: Holzlade mit Rollen für ZHN, VEP bis SN:104999	0	9999999999999
500	085421	de: Holzladebombe braun für ZHN	0	9999999999999
510	067091	Insolate sheet for ZHN	0	9999999999999
511	075442	Oven cover plate side for VestoWIN Premium 200-202	0	9999999999999
512	075450	de: Isolierblech hinten Backrohr ZHN (405X126X1-1,25)	0	9999999999999
520	060383	de: Isolierung für Backrohrboden für ZHN *ZHN0831	0	9999999999999
530	066826	de: Isolierwand hinten ZHN160/210,VEP200 bis SN: 104999	0	9999999999999
540	066893	de: Isolierwand seitlich für ZHN160/210,VEP200	0	9999999999999
590	060378	de: Kessel für ZHN 210/180 (Rauchabzug links)	0	9999999999999
591	060288	de: Zubehör für Kesseltausch für ZHN	0	9999999999999
595	023949	de: Hutfix SCO 6820 VERZ/GE Klammern Dekor ASN,ZHN,KSN,OEX	0	9999999999999
600	004057	Knob no.30.298-002-001 for ZHN,FKV,VestoWIN Klassik 170-220, VestoWIN Premium 200-202	0	9999999999999
610	012513	Knee no.95T 5/4“ for KSN, VestoWIN Premium 200-202, VestoWIN Klassik 170-220	0	9999999999999
620	023906	Throttle flap button (D10x15) for KSN,ZHN,VestoWIN Klassik 170-220, VestoWIN Premium 200-202	0	9999999999999
625	025925	de: Knopf für Zweitluft D10x10 elox. KSN/ZHN	0	9999999999999
630	056780	Smoke hole cover (Ø=220mm) for ZHN,KSN,KSL,VestoWIN Klassik 170-220	0	9999999999999
640	085332	de: Kohleladerad für Holzlade inkl.Schraube für ZHN,ZH	0	9999999999999
650	047084	Baking tray for ZHL,ZHN,VestoWIN Premium 200-202	0	9999999999999
660	081094	de: Kurbel für Hebevorrichtung für ZHN,KSN KSN192	0	9999999999999
670	085146	Crank for vibration device and grate lifting equipment for KSN,ZHN,VestoWIN Klassik 170-220	0	9999999999999
680	081043	de: Lagerbock für Rüttelachse für KSN,ZHN180/182,210/212	0	9999999999999
685	072362	de: Luftklappe für Feuerungsregler (191x82x0,75) für KSL,ZHL KSL317 ZHN,KSN150/160/200	0	9999999999999
690	075752	Wall support for KSL25,ZHL,KSN250,ZHN18/21,VestoWIN Klassik 220, VestoWIN Premium 200-202	0	9999999999999
700	066961	de: Mittelblende weiß für ZHN 210/212	0	9999999999999
700	067202	de: Mittelblende braun für ZHN 210/212 ZHN225	0	9999999999999
720	066613	de: Reinigungstür für ZHN	0	9999999999999
730	004065	KSN809 Knurled button for ZHN,KSN,VestoWIN Klassik 170-220, VestoWIN Premium 200-202, EasyWIN Klassik/Premium 180	0	9999999999999
740	067296	Flue gas baffle plate for ZHN, VestoWIN Premium 200-202	0	9999999999999
750	085472	Flue outlet with throttle flap for VestoWIN Premium 200-202	0	9999999999999
760	004014	KSN095 241 5/4“-1“ reduction nipple, black for KSN,ZHN,VestoWIN Klassik 170-220, VestoWIN Premium 200-202	0	9999999999999
780	000280	KSL194 Cleaning brush (680x80/57x40) for FKU,ZHN,KSN,ZHL,KS,FKX,VestoWIN Klassik 170-220, VestoWIN Premium 200-202	0	9999999999999
790	072192	Scratcher	0	9999999999999
800	067253	de: Ring für Rohrstutzen weiß für ZHN,KSN250 ZHN054	0	9999999999999
800	067938	de: Ring für Rohrstutzen braun für ZHN,KSN250 ZHN254	0	9999999999999
820	075744	KSL411 Smoke pipe for KSL25,ZHL,ZHN21/18,KSN250,VestoWIN Klassik 220	0	9999999999999
830	080292	KSN019 Grate support complete for ZHN,KSN160/200/150, VestoWIN Premium 200-202, VestoWIN Klassik 170	0	9999999999999
840	066761	Rear wall for ZHN160/210,VestoWIN Premium 200	0	9999999999999
850	080861	de: Rüttelachse (D16x133) KSN,ZHN KSN0051	0	9999999999999
860	004138	de: Rüttelrost (Mod.1-322-261) ZHN18/21,KSN150/200	0	9999999999999
865	008885	Locking pin, black Nr: 00910-000-000 FKN088, HMX,NBL,E/SKX,FKX	0	9999999999999
868	067911	Flue protection plate for ZHN, VestoWIN Premium 200-202	0	9999999999999
870	075183	de: Seitenwand links weiß kpl. KSN,ZHN	0	9999999999999
870	082147	de: Seitenwand links braun KSN/ZHN	0	9999999999999
890	075191	de: Seitenwand rechts weiß kpl. KSN,ZHN	0	9999999999999
890	082163	de: Seitenwand rechts braun KSN,ZHN	0	9999999999999
910	067792	de: Sockel schwarz für ZHN 210	0	9999999999999
920	060558	Nut for lifting equipment rear for ZHN210/212,KSN160/200/150,VestoWIN Klassik 170, VestoWIN Premium 200-202	0	9999999999999

Item no.	Article no.	Description	Serialnumber from	Serialnumber t
930	081485	Nut for lifting equipment front for ZHN210/212,KSN160/200/150,VestoWIN Klassik 170, VestoWIN Premium 200-202	0	9999999999999
935	082015	de: Stehrost für KSN 160/200/150, ZHN	0	9999999999999
940	072222	Poker (D9x750) for KSL,ZHL,ZHN,KSN,VestoWIN Klassik 170-220, VestoWIN Premium 200-202	0	9999999999999
950	004197	KSN094 WAF Plug no.290 5/4" for ZHN,KSN,Vesto WIN Klassik 170-220, VestoWIN Premium 200-202	0	9999999999999
960	005452	OK-915 Immersion sleeve (129 mm) No.55501.04 for EKX,OK/E,GWX,KSN,ZHN,OK-915,ETX,SNX,FKX,MIRA,FireWIN,VestoWIN Klassik 170-220,	0	9999999999999
970	004049	KSN027 Thermometer Z.Nr.SK 2014 IFC 52-052 KRF for ZHN,OEX,KSN,ASN,NBE,VestoWIN Premium 200-202, VestoWIN Klassik 170-220, fitting	0	9999999999999
980	054003	de: Glasscheibe inkl. Thermometer für Backrohrtüre ZHN und VEP bis 01/2014	0	9999999999999
990	010421	KSN100 Thermostat minimal 716 RU-9289 0-95 Grades for FK,GWX,KSN,ZHN,GSX,ETX,SNX,FKX,VestoWIN Klassik 170-220, VestoWIN Premium 20	0	9999999999999
1000	067199	Oven dividing/insulating wall for VestoWIN Premium 200-202	0	9999999999999
1010	067040	Dividing wall top for ZHN160/210,VestoWIN Premium 200	0	9999999999999
1020	067180	Dividing wall between boiler and oven for ZHN, VestoWIN Premium 200-202	0	9999999999999
1030	048063	de: Türscharnier links inkl.Schrauben für Backrohr ZHN	0	9999999999999
1040	048065	de: Türscharnier rechts inkl.Schrauben für Backrohr ZHN	0	9999999999999
1050	061840	KSN022 Door catch for KSN,ZHN,PMX, VestoWIN Premium 200-202, VestoWIN Klassik 170-220	0	9999999999999
1060	004413	KSN099 Union nut no.374 5/4“ for VestoWIN Premium 200-202, VestoWIN Klassik 170-220	0	9999999999999
1070	066745	de: Vorderwand für Backrohr für ZHN 160/210	0	9999999999999
1080	067679	Wall end plate (105x108x1,25) for ZHN210, VestoWIN Premium 200	0	9999999999999
1085	066567	KSN9492 Throttle flap shaft for KSN210/250,ZHN18/21,VestoWIN Klassik 170-220, VestoWIN Premium 200-202	0	9999999999999
1090	004006	KSN097 Bracket no.92 3/8“ for ZHN,KSN,VestoWIN Klassik 170-220, VestoWIN Premium 200-202	0	9999999999999

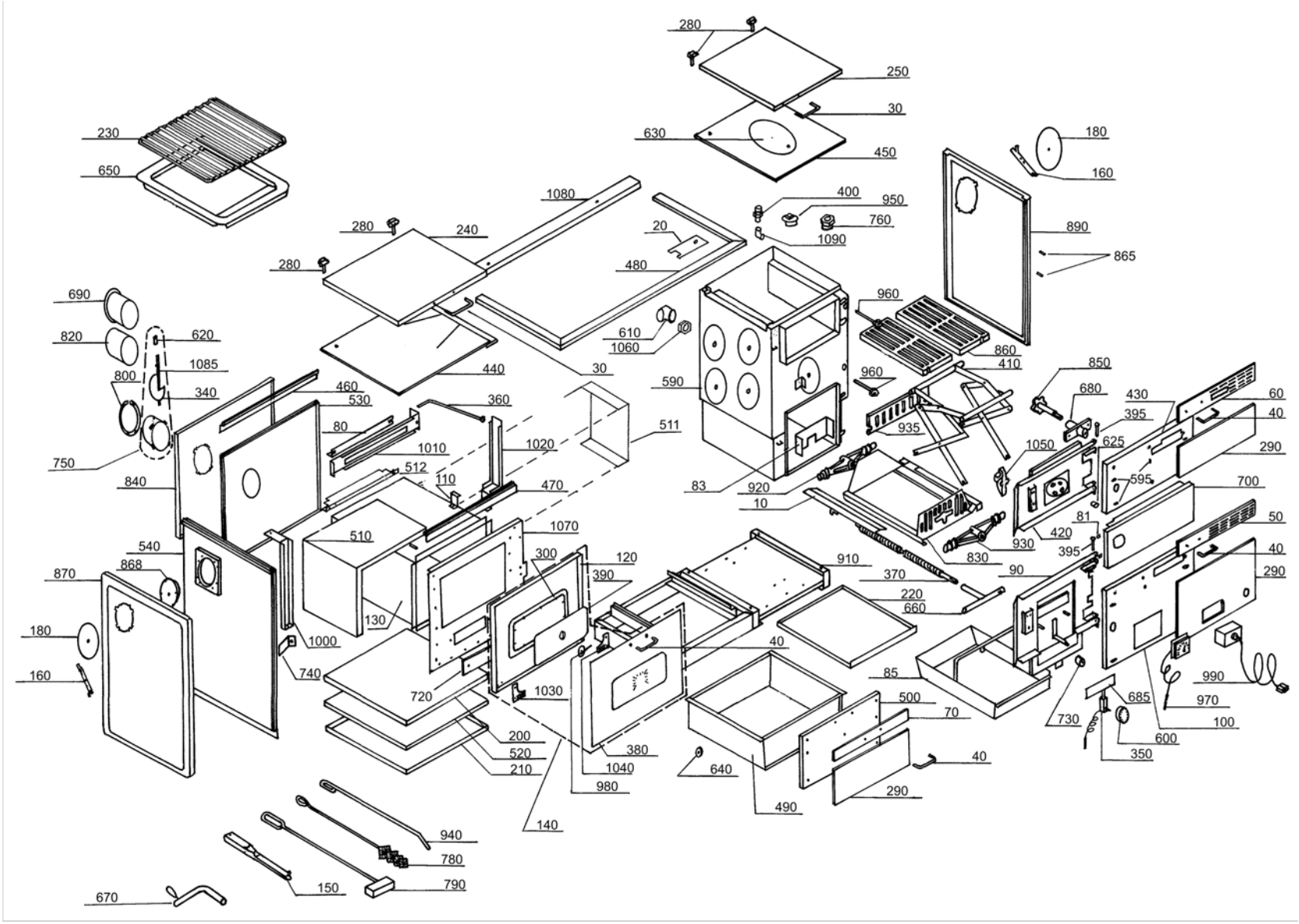
280
250
30
630
450
180
160
230
650
1080
400
950
760
1090
890
865
280
240
20
480
280
690
820
620
1085
800
340
460
530
440
30
610
1060
960
860
410
850
680
430
395
60
40
290
590
960
935
1050
625
595
700
750
840
80
1010
512
110
360
1020
511
470
83
920
10
81
420
930
830
395
50
40
290
540
868
870
510
1070
300
120
390
910
370
90
220
660
180
160
130
1000
740
720
1030
40
85
500
70
730
685
990
970
100
600
350
200
520
210
380
1040
980
640
490
40
290
140
940
780
790
150
670

Item no.	Article no.	Description	Serialnumber from	Serialnumber
10	081582	Cover for threaded spindle for KSN,ZHN,VestoWIN Klassik 170-220	0	9999999999999
20	075574	Oven frame cover for VestoWIN Premium 200-202	0	9999999999999
30	004332	de: Alu-Griff LA 130mm,SH 45mm BR Deckel KSN,ZHN	0	9999999999999
36	025925	de: Knopf für Zweitluft D10x10 elox. KSN/ZHN	0	9999999999999
40	004340	de: Alu-Griff LA 130mm,SH 35mm BR, ZHN,KSN,ASN/E	0	9999999999999
50	004162	de: Alu-Türgriffblende eloxiert ZHN,KSN150/160/200 Heiztür	0	9999999999999
60	004634	de: Alu-Türgriffblende eloxiert KSN,ZHN 21 HT	0	9999999999999
70	004693	de: Alu-Türgriffblende ZHN Holzlade	0	9999999999999
80	067121	Heating flap for ZHL,ZHN,VestoWIN Premium 200-202 ZHN036	0	9999999999999
81	008893	de: Arretierung schwarz E/SKX,HMX,FKX,MIRA	0	9999999999999
83	081507	de: Aschekippblech (254x82x3) für KSN150/160/200 KSN110	0	9999999999999
85	080810	de: Aschelade für ZHN, KSN150/160/200	0	9999999999999
90	085308	de: Aschetür für ZHN 212,KSN150/160/200	0	9999999999999
100	085391	de: Blende Aschetür braun ZHN 212,KSN150/160/200 KSN0121	0	9999999999999
110	069418	de: Auflage für Anheizklappe (39x33x1,5) ZHN 160/162	0	9999999999999
120	065005	de: Backrohr Innentür für ZHN	0	9999999999999
130	050301	Oven set for ZHN	0	9999999999999
140	085448	de: Backrohrtür für ZHN	0	9999999999999
150	073407	Operating handle for FKV,KSL,ZHL,FKN,FAX,ZHN,KSN,FKH,HMX,VestoWIN Premium 200-202, VestoWIN Klassik 170-220	0	9999999999999
160	080098	KSN0341 Fastening clip for dummy washer for HN,KSN,ASN/E, fittings cabinet Vesto 200	0	9999999999999
170	067911	Flue protection plate for ZHN, VestoWIN Premium 200-202	0	9999999999999
180	081221	de: Blindscheibe weiß für ASN,KSN,ZHN KSN134	0	9999999999999
180	082198	de: Blindscheibe braun für KSN,ASN,ZHN	0	9999999999999
200	066834	Buttom for ZHN,VEP	0	9999999999999
210	066842	Bottom for ZHN,VEP	0	9999999999999
220	080500	Ground tray (498x416x0,9) for ZHN,KSN150/160/200, VestoWIN Premium 200-202, VestoWIN Klassik 170	0	9999999999999
230	003174	Grid iron for ZHN, VestoWIN Premium 200-202	0	9999999999999
240	040800	de: Deckel weiß für ZHN Backrohrseite	0	9999999999999
240	086509	de: Deckel braun für ZHN Backrohrseite	0	9999999999999
250	076880	de: Deckel weiß für KSN 150/160/200,ZHN 212 Kesselseite KSN086	0	9999999999999
250	085375	de: Deckel braun KSN 150/160/200,ZHN 212 für Kesselseite	0	9999999999999
280	004308	Cover hinge for KSN/ZHN, VestoWIN Klassik 170-220, VestoWIN Premium 200-202	0	9999999999999
290	503077	ZHN003 Dekor rotbraun zu ZHN 180/182	0	9999999999999
290	503079	ZHN006 Pearl white ZHN 180/182	0	9999999999999
290	503080	ZHN007 Sahara beige ZHN 180/182	0	9999999999999
290	503081	ZHN008 Brown beige ZHN 180/182	0	9999999999999
290	503083	ZHN010 Dark brown ZHN 180/182	0	9999999999999
300	004928	Glass fibre cord 5/5mm for FireWIN, ZHN, VestoWIN Premium 200-202	0	9999999999999
340	041693	Throttle flap for KSN210/250,ZHN18/21,VestoWIN Klassik 220	0	9999999999999
350	004030	Combustion controlling mechanism for KSN,ZHN,FKV,VestoWIN Klassik 170-220, VestoWIN Premium 200-202	0	9999999999999
360	067148	Heating flap linkage for ZHN162/212, ZHN0364, VestoWIN Premium 202	0	9999999999999
370	081213	Threaded spindle (Ø20x377) for KSN,ZHN,VestoWIN Klassik 170-220, VestoWIN Premium 200-202	0	9999999999999
380	067703	de: Glasscheibe außen für ZHN-Backrohrtüre (543x383mm)	0	9999999999999
390	054003	de: Glasscheibe inkl. Thermometer für Backrohrtüre ZHN und VEP bis 01/2014	0	9999999999999
395	012998	de: HR-Stifte 6X41 gerändelt KSN,ZHN	0	9999999999999
400	004863	Manually operated bleeder VFR 3/8" for ZHN,KSN,GKW,NBE115,GKA/E,VestoWIN Klassik 170-220, VestoWIN Premium 200-202	0	9999999999999
410	080675	Lifting jack for ZHN,KSN160/200/150, VestoWIN Premium 200-202, VestoWIN Klassik 170	0	9999999999999
420	085359	de: Heiztür für KSN 160/200/150,ZHN 212	0	9999999999999
430	088986	de: Blende Heiztür braun KSN150/160/200,ZHN212/182 KSN0141	0	9999999999999
440	004626	Oven hot plate (547x505x7mm) for ZHN162/182/212 ZHN0621, VestoWIN Premium 202	0	9999999999999
440	048172	Hot plate - flue tube top for VestoWIN Premium 202	0	9999999999999

Item no.	Article no.	Description	Serialnumber from	Serialnumber t
450	004081	Boiler hot plate (418x505x7mm) for KSN160/200/150,ZHN18/21, VestoWIN Premium 200-202, VestoWIN Klassik 170	0	9999999999999
460	067598	de: Herdplattenauflage hinten für ZHN	0	9999999999999
470	067644	Hot plate support front for ZHN066, VestoWIN Premium 200-202	0	9999999999999
480	066710	Oven frame for ZHN210/212/180/182/173, VestoWIN Premium 200-202	0	9999999999999
490	050189	de: Holzlade mit Rollen für ZHN, VEP bis SN:104999	0	9999999999999
500	085421	de: Holzladebombe braun für ZHN	0	9999999999999
510	067091	Insolate sheet for ZHN	0	9999999999999
511	075442	Oven cover plate side for VestoWIN Premium 200-202	0	9999999999999
512	075450	de: Isolierblech hinten Backrohr ZHN (405X126X1-1,25)	0	9999999999999
520	060383	de: Isolierung für Backrohrboden für ZHN *ZHN0831	0	9999999999999
530	066818	Insolate rear wall ZHN162/212,VEP202 to lot 4	0	9999999999999
540	066885	Insolate sidewards ZHN162/212,VEP202	0	9999999999999
590	060379	de: Kessel für ZHN 212/182 (Rauchabzug rechts)	0	9999999999999
591	060288	de: Zubehör für Kesseltausch für ZHN	0	9999999999999
595	023949	de: Hutfix SCO 6820 VERZ/GE Klammern Dekor ASN,ZHN,KSN,OEX	0	9999999999999
600	004057	Knob no.30.298-002-001 for ZHN,FKV,VestoWIN Klassik 170-220, VestoWIN Premium 200-202	0	9999999999999
610	012513	Knee no.95T 5/4“ for KSN, VestoWIN Premium 200-202, VestoWIN Klassik 170-220	0	9999999999999
620	023906	Throttle flap button (D10x15) for KSN,ZHN,VestoWIN Klassik 170-220, VestoWIN Premium 200-202	0	9999999999999
625	025925	de: Knopf für Zweitluft D10x10 elox. KSN/ZHN	0	9999999999999
630	056780	Smoke hole cover (Ø=220mm) for ZHN,KSN,KSL,VestoWIN Klassik 170-220	0	9999999999999
640	085332	de: Kohleladerad für Holzlade inkl.Schraube für ZHN,ZH	0	9999999999999
650	047084	Baking tray for ZHL,ZHN,VestoWIN Premium 200-202	0	9999999999999
660	081094	de: Kurbel für Hebevorrichtung für ZHN,KSN KSN192	0	9999999999999
670	085146	Crank for vibration device and grate lifting equipment for KSN,ZHN,VestoWIN Klassik 170-220	0	9999999999999
680	081043	de: Lagerbock für Rüttelachse für KSN,ZHN180/182,210/212	0	9999999999999
685	072362	de: Luftklappe für Feuerungsregler (191x82x0,75) für KSL,ZHL KSL317 ZHN,KSN150/160/200	0	9999999999999
690	075752	Wall support for KSL25,ZHL,KSN250,ZHN18/21,VestoWIN Klassik 220, VestoWIN Premium 200-202	0	9999999999999
700	066961	de: Mittelblende weiß für ZHN 210/212	0	9999999999999
700	067202	de: Mittelblende braun für ZHN 210/212 ZHN225	0	9999999999999
720	066613	de: Reinigungstür für ZHN	0	9999999999999
730	004065	KSN809 Knurled button for ZHN,KSN,VestoWIN Klassik 170-220, VestoWIN Premium 200-202, EasyWIN Klassik/Premium 180	0	9999999999999
740	067296	Flue gas baffle plate for ZHN, VestoWIN Premium 200-202	0	9999999999999
750	085472	Flue outlet with throttle flap for VestoWIN Premium 200-202	0	9999999999999
760	004014	KSN095 241 5/4“-1“ reduction nipple, black for KSN,ZHN,VestoWIN Klassik 170-220, VestoWIN Premium 200-202	0	9999999999999
780	000280	KSL194 Cleaning brush (680x80/57x40) for FKU,ZHN,KSN,ZHL,KS,FKX,VestoWIN Klassik 170-220, VestoWIN Premium 200-202	0	9999999999999
790	072192	Scratcher	0	9999999999999
800	067253	de: Ring für Rohrstutzen weiß für ZHN,KSN250 ZHN054	0	9999999999999
800	067938	de: Ring für Rohrstutzen braun für ZHN,KSN250 ZHN254	0	9999999999999
820	075744	KSL411 Smoke pipe for KSL25,ZHL,ZHN21/18,KSN250,VestoWIN Klassik 220	0	9999999999999
830	080292	KSN019 Grate support complete for ZHN,KSN160/200/150, VestoWIN Premium 200-202, VestoWIN Klassik 170	0	9999999999999
840	066753	Rear wall for ZHN162/212,VestoWIN Premium 202	0	9999999999999
850	080861	de: Rüttelachse (D16x133) KSN,ZHN KSN0051	0	9999999999999
860	004138	de: Rüttelrost (Mod.1-322-261) ZHN18/21,KSN150/200	0	9999999999999
865	008885	Locking pin, black Nr: 00910-000-000 FKN088, HMX,NBL,E/SKX,FKX	0	9999999999999
868	067911	Flue protection plate for ZHN, VestoWIN Premium 200-202	0	9999999999999
870	075183	de: Seitenwand links weiß kpl. KSN,ZHN	0	9999999999999
870	082147	de: Seitenwand links braun KSN/ZHN	0	9999999999999
890	075191	de: Seitenwand rechts weiß kpl. KSN,ZHN	0	9999999999999
890	082163	de: Seitenwand rechts braun KSN,ZHN	0	9999999999999
910	066133	de: Sockel schwarz für ZHN 212	0	9999999999999
920	060558	Nut for lifting equipment rear for ZHN210/212,KSN160/200/150,VestoWIN Klassik 170, VestoWIN Premium 200-202	0	9999999999999

Item no.	Article no.	Description	Serialnumber from	Serialnumber t
930	081485	Nut for lifting equipment front for ZHN210/212,KSN160/200/150,VestoWIN Klassik 170, VestoWIN Premium 200-202	0	9999999999999
935	082015	de: Stehrost für KSN 160/200/150, ZHN	0	9999999999999
940	072222	Poker (D9x750) for KSL,ZHL,ZHN,KSN,VestoWIN Klassik 170-220, VestoWIN Premium 200-202	0	9999999999999
950	004197	KSN094 WAF Plug no.290 5/4" for ZHN,KSN,Vesto WIN Klassik 170-220, VestoWIN Premium 200-202	0	9999999999999
960	005452	OK-915 Immersion sleeve (129 mm) No.55501.04 for EKX,OK/E,GWX,KSN,ZHN,OK-915,ETX,SNX,FKX,MIRA,FireWIN,VestoWIN Klassik 170-220,	0	9999999999999
970	004049	KSN027 Thermometer Z.Nr.SK 2014 IFC 52-052 KRF for ZHN,OEX,KSN,ASN,NBE,VestoWIN Premium 200-202, VestoWIN Klassik 170-220, fitting	0	9999999999999
980	054003	de: Glasscheibe inkl. Thermometer für Backrohrtüre ZHN und VEP bis 01/2014	0	9999999999999
990	010421	KSN100 Thermostat minimal 716 RU-9289 0-95 Grades for FK,GWX,KSN,ZHN,GSX,ETX,SNX,FKX,VestoWIN Klassik 170-220, VestoWIN Premium 20	0	9999999999999
1000	067199	Oven dividing/insulating wall for VestoWIN Premium 200-202	0	9999999999999
1010	067113	Dividing wall top for ZHN162/212,VestoWIN Premium 202	0	9999999999999
1020	067180	Dividing wall between boiler and oven for ZHN, VestoWIN Premium 200-202	0	9999999999999
1030	048063	de: Türscharnier links inkl.Schrauben für Backrohr ZHN	0	9999999999999
1040	048065	de: Türscharnier rechts inkl.Schrauben für Backrohr ZHN	0	9999999999999
1050	061840	KSN022 Door catch for KSN,ZHN,PMX, VestoWIN Premium 200-202, VestoWIN Klassik 170-220	0	9999999999999
1060	004413	KSN099 Union nut no.374 5/4“ for VestoWIN Premium 200-202, VestoWIN Klassik 170-220	0	9999999999999
1070	066397	de: Vorderwand für Backrohr für ZHN 162/212	0	9999999999999
1080	066737	de: Wandabschlußleiste (105x108x1,25) ZHN 212/VEP202	0	9999999999999
1085	066567	KSN9492 Throttle flap shaft for KSN210/250,ZHN18/21,VestoWIN Klassik 170-220, VestoWIN Premium 200-202	0	9999999999999
1090	004006	KSN097 Bracket no.92 3/8“ for ZHN,KSN,VestoWIN Klassik 170-220, VestoWIN Premium 200-202	0	9999999999999

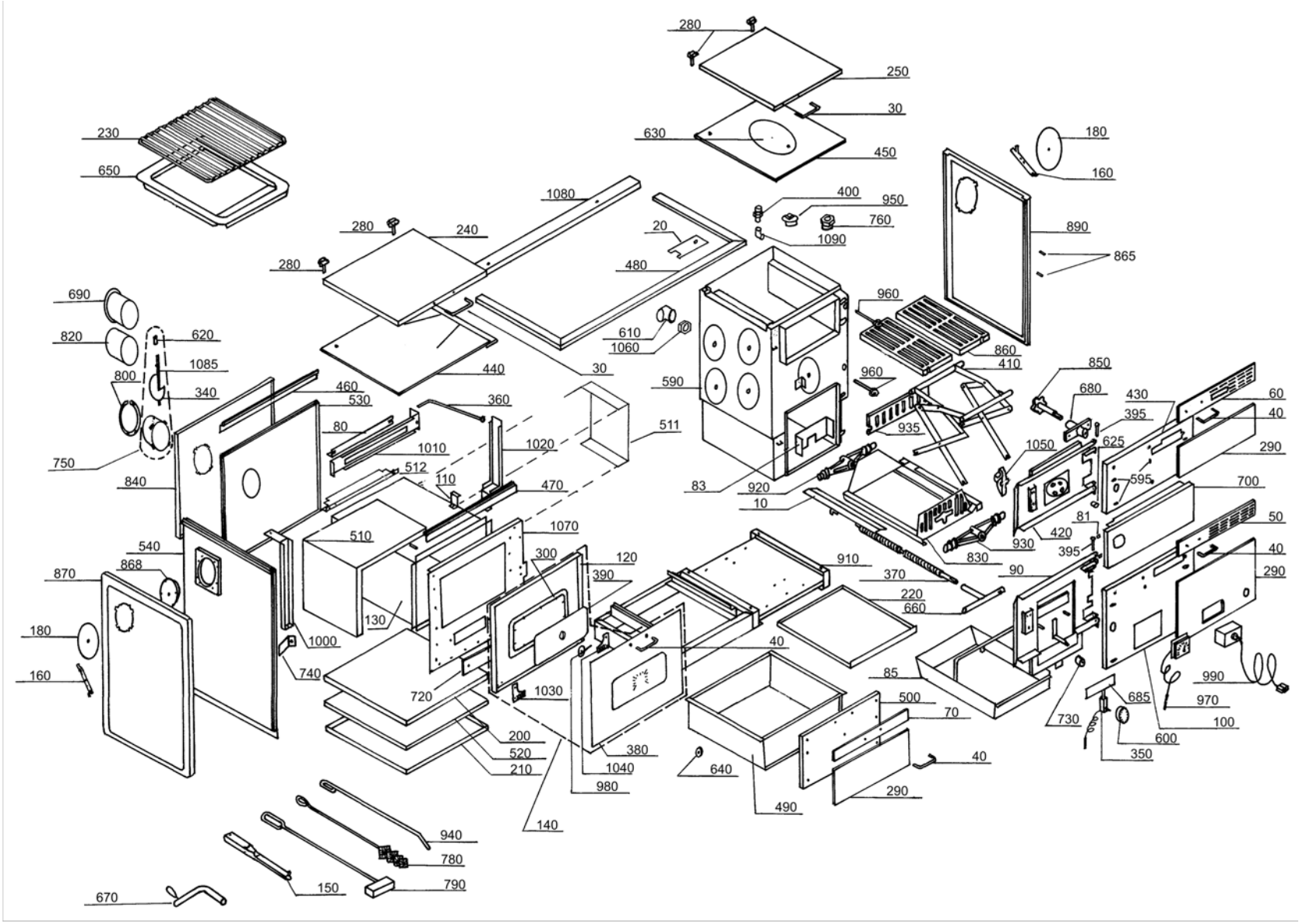
280
250
30
630
450
180
160
230
650
1080
400
950
760
1090
890
865
280
240
20
480
280
690
820
620
1085
800
340
460
530
440
30
610
1060
960
860
410
850
680
430
395
60
40
290
590
960
935
1050
625
595
700
750
840
80
1010
512
110
1020
511
470
83
920
10
81
420
930
830
395
50
40
290
540
868
870
510
1070
300
120
390
910
370
90
220
660
180
160
130
1000
740
720
1030
40
85
500
70
730
685
990
970
100
600
350
200
520
210
380
1040
980
640
40
290
490
140
940
780
790
150
670

Item no.	Article no.	Description	Serialnumber from	Serialnumber t
10	081582	Cover for threaded spindle for KSN,ZHN,VestoWIN Klassik 170-220	0	9999999999999
20	075574	Oven frame cover for VestoWIN Premium 200-202	0	9999999999999
30	004332	de: Alu-Griff LA 130mm,SH 45mm BR Deckel KSN,ZHN	0	9999999999999
36	025925	de: Knopf für Zweitluft D10x10 elox. KSN/ZHN	0	9999999999999
40	004340	de: Alu-Griff LA 130mm,SH 35mm BR, ZHN,KSN,ASN/E	0	9999999999999
50	004162	de: Alu-Türgriffblende eloxiert ZHN,KSN150/160/200 Heiztür	0	9999999999999
60	004634	de: Alu-Türgriffblende eloxiert KSN,ZHN 21 HT	0	9999999999999
70	004693	de: Alu-Türgriffblende ZHN Holzlade	0	9999999999999
80	067121	Heating flap for ZHL,ZHN,VestoWIN Premium 200-202 ZHN036	0	9999999999999
81	008893	de: Arretierung schwarz E/SKX,HMX,FKX,MIRA	0	9999999999999
83	081507	de: Aschekippblech (254x82x3) für KSN150/160/200 KSN110	0	9999999999999
85	080810	de: Aschelade für ZHN, KSN150/160/200	0	9999999999999
90	085308	de: Aschetür für ZHN 212,KSN150/160/200	0	9999999999999
100	085391	de: Blende Aschetür braun ZHN 212,KSN150/160/200 KSN0121	0	9999999999999
110	069418	de: Auflage für Anheizklappe (39x33x1,5) ZHN 160/162	0	9999999999999
120	065005	de: Backrohr Innentür für ZHN	0	9999999999999
130	050301	Oven set for ZHN	0	9999999999999
140	085448	de: Backrohrtür für ZHN	0	9999999999999
150	073407	Operating handle for FKV,KSL,ZHL,FKN,FAX,ZHN,KSN,FKH,HMX,VestoWIN Premium 200-202, VestoWIN Klassik 170-220	0	9999999999999
160	080098	KSN0341 Fastening clip for dummy washer for HN,KSN,ASN/E, fittings cabinet Vesto 200	0	9999999999999
170	067911	Flue protection plate for ZHN, VestoWIN Premium 200-202	0	9999999999999
180	081221	de: Blindscheibe weiß für ASN,KSN,ZHN KSN134	0	9999999999999
180	082198	de: Blindscheibe braun für KSN,ASN,ZHN	0	9999999999999
200	066834	Buttom for ZHN,VEP	0	9999999999999
210	066842	Bottom for ZHN,VEP	0	9999999999999
220	080500	Ground tray (498x416x0,9) for ZHN,KSN150/160/200, VestoWIN Premium 200-202, VestoWIN Klassik 170	0	9999999999999
230	003174	Grid iron for ZHN, VestoWIN Premium 200-202	0	9999999999999
240	040800	de: Deckel weiß für ZHN Backrohrseite	0	9999999999999
240	086509	de: Deckel braun für ZHN Backrohrseite	0	9999999999999
250	076880	de: Deckel weiß für KSN 150/160/200,ZHN 212 Kesselseite KSN086	0	9999999999999
250	085375	de: Deckel braun KSN 150/160/200,ZHN 212 für Kesselseite	0	9999999999999
280	004308	Cover hinge for KSN/ZHN, VestoWIN Klassik 170-220, VestoWIN Premium 200-202	0	9999999999999
290	503077	ZHN003 Dekor rotbraun zu ZHN 180/182	0	9999999999999
290	503079	ZHN006 Pearl white ZHN 180/182	0	9999999999999
290	503080	ZHN007 Sahara beige ZHN 180/182	0	9999999999999
290	503081	ZHN008 Brown beige ZHN 180/182	0	9999999999999
290	503083	ZHN010 Dark brown ZHN 180/182	0	9999999999999
300	004928	Glass fibre cord 5/5mm for FireWIN, ZHN, VestoWIN Premium 200-202	0	9999999999999
340	041693	Throttle flap for KSN210/250,ZHN18/21,VestoWIN Klassik 220	0	9999999999999
350	004030	Combustion controlling mechanism for KSN,ZHN,FKV,VestoWIN Klassik 170-220, VestoWIN Premium 200-202	0	9999999999999
360	067148	Heating flap linkage for ZHN162/212, ZHN0364, VestoWIN Premium 202	0	9999999999999
370	081213	Threaded spindle (Ø20x377) for KSN,ZHN,VestoWIN Klassik 170-220, VestoWIN Premium 200-202	0	9999999999999
380	067703	de: Glasscheibe außen für ZHN-Backrohrtüre (543x383mm)	0	9999999999999
390	054003	de: Glasscheibe inkl. Thermometer für Backrohrtüre ZHN und VEP bis 01/2014	0	9999999999999
395	012998	de: HR-Stifte 6X41 gerändelt KSN,ZHN	0	9999999999999
400	004863	Manually operated bleeder VFR 3/8" for ZHN,KSN,GKW,NBE115,GKA/E,VestoWIN Klassik 170-220, VestoWIN Premium 200-202	0	9999999999999
410	080675	Lifting jack for ZHN,KSN160/200/150, VestoWIN Premium 200-202, VestoWIN Klassik 170	0	9999999999999
420	085359	de: Heiztür für KSN 160/200/150,ZHN 212	0	9999999999999
430	088986	de: Blende Heiztür braun KSN150/160/200,ZHN212/182 KSN0141	0	9999999999999
440	004626	Oven hot plate (547x505x7mm) for ZHN162/182/212 ZHN0621, VestoWIN Premium 202	0	9999999999999
440	048172	Hot plate - flue tube top for VestoWIN Premium 202	0	9999999999999

Item no.	Article no.	Description	Serialnumber from	Serialnumber t
450	004081	Boiler hot plate (418x505x7mm) for KSN160/200/150,ZHN18/21, VestoWIN Premium 200-202, VestoWIN Klassik 170	0	9999999999999
460	067598	de: Herdplattenauflage hinten für ZHN	0	9999999999999
470	067644	Hot plate support front for ZHN066, VestoWIN Premium 200-202	0	9999999999999
480	066710	Oven frame for ZHN210/212/180/182/173, VestoWIN Premium 200-202	0	9999999999999
490	050189	de: Holzlade mit Rollen für ZHN, VEP bis SN:104999	0	9999999999999
500	085421	de: Holzladebombe braun für ZHN	0	9999999999999
510	067091	Insolate sheet for ZHN	0	9999999999999
511	075442	Oven cover plate side for VestoWIN Premium 200-202	0	9999999999999
512	075450	de: Isolierblech hinten Backrohr ZHN (405X126X1-1,25)	0	9999999999999
520	060383	de: Isolierung für Backrohrboden für ZHN *ZHN0831	0	9999999999999
530	066818	Insolate rear wall ZHN162/212,VEP202 to lot 4	0	9999999999999
540	066885	Insolate sidewards ZHN162/212,VEP202	0	9999999999999
590	060379	de: Kessel für ZHN 212/182 (Rauchabzug rechts)	0	9999999999999
591	060288	de: Zubehör für Kesseltausch für ZHN	0	9999999999999
595	023949	de: Hutfix SCO 6820 VERZ/GE Klammern Dekor ASN,ZHN,KSN,OEX	0	9999999999999
600	004057	Knob no.30.298-002-001 for ZHN,FKV,VestoWIN Klassik 170-220, VestoWIN Premium 200-202	0	9999999999999
610	012513	Knee no.95T 5/4“ for KSN, VestoWIN Premium 200-202, VestoWIN Klassik 170-220	0	9999999999999
620	023906	Throttle flap button (D10x15) for KSN,ZHN,VestoWIN Klassik 170-220, VestoWIN Premium 200-202	0	9999999999999
625	025925	de: Knopf für Zweitluft D10x10 elox. KSN/ZHN	0	9999999999999
630	056780	Smoke hole cover (Ø=220mm) for ZHN,KSN,KSL,VestoWIN Klassik 170-220	0	9999999999999
640	085332	de: Kohleladerad für Holzlade inkl.Schraube für ZHN,ZH	0	9999999999999
650	047084	Baking tray for ZHL,ZHN,VestoWIN Premium 200-202	0	9999999999999
660	081094	de: Kurbel für Hebevorrichtung für ZHN,KSN KSN192	0	9999999999999
670	085146	Crank for vibration device and grate lifting equipment for KSN,ZHN,VestoWIN Klassik 170-220	0	9999999999999
680	081043	de: Lagerbock für Rüttelachse für KSN,ZHN180/182,210/212	0	9999999999999
685	072362	de: Luftklappe für Feuerungsregler (191x82x0,75) für KSL,ZHL KSL317 ZHN,KSN150/160/200	0	9999999999999
690	075752	Wall support for KSL25,ZHL,KSN250,ZHN18/21,VestoWIN Klassik 220, VestoWIN Premium 200-202	0	9999999999999
700	066961	de: Mittelblende weiß für ZHN 210/212	0	9999999999999
700	067202	de: Mittelblende braun für ZHN 210/212 ZHN225	0	9999999999999
720	066613	de: Reinigungstür für ZHN	0	9999999999999
730	004065	KSN809 Knurled button for ZHN,KSN,VestoWIN Klassik 170-220, VestoWIN Premium 200-202, EasyWIN Klassik/Premium 180	0	9999999999999
740	067296	Flue gas baffle plate for ZHN, VestoWIN Premium 200-202	0	9999999999999
750	085472	Flue outlet with throttle flap for VestoWIN Premium 200-202	0	9999999999999
760	004014	KSN095 241 5/4“-1“ reduction nipple, black for KSN,ZHN,VestoWIN Klassik 170-220, VestoWIN Premium 200-202	0	9999999999999
780	000280	KSL194 Cleaning brush (680x80/57x40) for FKU,ZHN,KSN,ZHL,KS,FKX,VestoWIN Klassik 170-220, VestoWIN Premium 200-202	0	9999999999999
790	072192	Scratcher	0	9999999999999
800	067253	de: Ring für Rohrstutzen weiß für ZHN,KSN250 ZHN054	0	9999999999999
800	067938	de: Ring für Rohrstutzen braun für ZHN,KSN250 ZHN254	0	9999999999999
820	075744	KSL411 Smoke pipe for KSL25,ZHL,ZHN21/18,KSN250,VestoWIN Klassik 220	0	9999999999999
830	080292	KSN019 Grate support complete for ZHN,KSN160/200/150, VestoWIN Premium 200-202, VestoWIN Klassik 170	0	9999999999999
840	066753	Rear wall for ZHN162/212,VestoWIN Premium 202	0	9999999999999
850	080861	de: Rüttelachse (D16x133) KSN,ZHN KSN0051	0	9999999999999
860	004138	de: Rüttelrost (Mod.1-322-261) ZHN18/21,KSN150/200	0	9999999999999
865	008885	Locking pin, black Nr: 00910-000-000 FKN088, HMX,NBL,E/SKX,FKX	0	9999999999999
868	067911	Flue protection plate for ZHN, VestoWIN Premium 200-202	0	9999999999999
870	075183	de: Seitenwand links weiß kpl. KSN,ZHN	0	9999999999999
870	082147	de: Seitenwand links braun KSN/ZHN	0	9999999999999
890	075191	de: Seitenwand rechts weiß kpl. KSN,ZHN	0	9999999999999
890	082163	de: Seitenwand rechts braun KSN,ZHN	0	9999999999999
910	066133	de: Sockel schwarz für ZHN 212	0	9999999999999
920	060558	Nut for lifting equipment rear for ZHN210/212,KSN160/200/150,VestoWIN Klassik 170, VestoWIN Premium 200-202	0	9999999999999

Item no.	Article no.	Description	Serialnumber from	Serialnumber t
930	081485	Nut for lifting equipment front for ZHN210/212,KSN160/200/150,VestoWIN Klassik 170, VestoWIN Premium 200-202	0	9999999999999
935	082015	de: Stehrost für KSN 160/200/150, ZHN	0	9999999999999
940	072222	Poker (D9x750) for KSL,ZHL,ZHN,KSN,VestoWIN Klassik 170-220, VestoWIN Premium 200-202	0	9999999999999
950	004197	KSN094 WAF Plug no.290 5/4" for ZHN,KSN,Vesto WIN Klassik 170-220, VestoWIN Premium 200-202	0	9999999999999
960	005452	OK-915 Immersion sleeve (129 mm) No.55501.04 for EKX,OK/E,GWX,KSN,ZHN,OK-915,ETX,SNX,FKX,MIRA,FireWIN,VestoWIN Klassik 170-220,	0	9999999999999
970	004049	KSN027 Thermometer Z.Nr.SK 2014 IFC 52-052 KRF for ZHN,OEX,KSN,ASN,NBE,VestoWIN Premium 200-202, VestoWIN Klassik 170-220, fitting	0	9999999999999
980	054003	de: Glasscheibe inkl. Thermometer für Backrohrtüre ZHN und VEP bis 01/2014	0	9999999999999
990	010421	KSN100 Thermostat minimal 716 RU-9289 0-95 Grades for FK,GWX,KSN,ZHN,GSX,ETX,SNX,FKX,VestoWIN Klassik 170-220, VestoWIN Premium 20	0	9999999999999
1000	067199	Oven dividing/insulating wall for VestoWIN Premium 200-202	0	9999999999999
1010	067113	Dividing wall top for ZHN162/212,VestoWIN Premium 202	0	9999999999999
1020	067180	Dividing wall between boiler and oven for ZHN, VestoWIN Premium 200-202	0	9999999999999
1030	048063	de: Türscharnier links inkl.Schrauben für Backrohr ZHN	0	9999999999999
1040	048065	de: Türscharnier rechts inkl.Schrauben für Backrohr ZHN	0	9999999999999
1050	061840	KSN022 Door catch for KSN,ZHN,PMX, VestoWIN Premium 200-202, VestoWIN Klassik 170-220	0	9999999999999
1060	004413	KSN099 Union nut no.374 5/4“ for VestoWIN Premium 200-202, VestoWIN Klassik 170-220	0	9999999999999
1070	066397	de: Vorderwand für Backrohr für ZHN 162/212	0	9999999999999
1080	066737	de: Wandabschlußleiste (105x108x1,25) ZHN 212/VEP202	0	9999999999999
1085	066567	KSN9492 Throttle flap shaft for KSN210/250,ZHN18/21,VestoWIN Klassik 170-220, VestoWIN Premium 200-202	0	9999999999999
1090	004006	KSN097 Bracket no.92 3/8“ for ZHN,KSN,VestoWIN Klassik 170-220, VestoWIN Premium 200-202	0	9999999999999

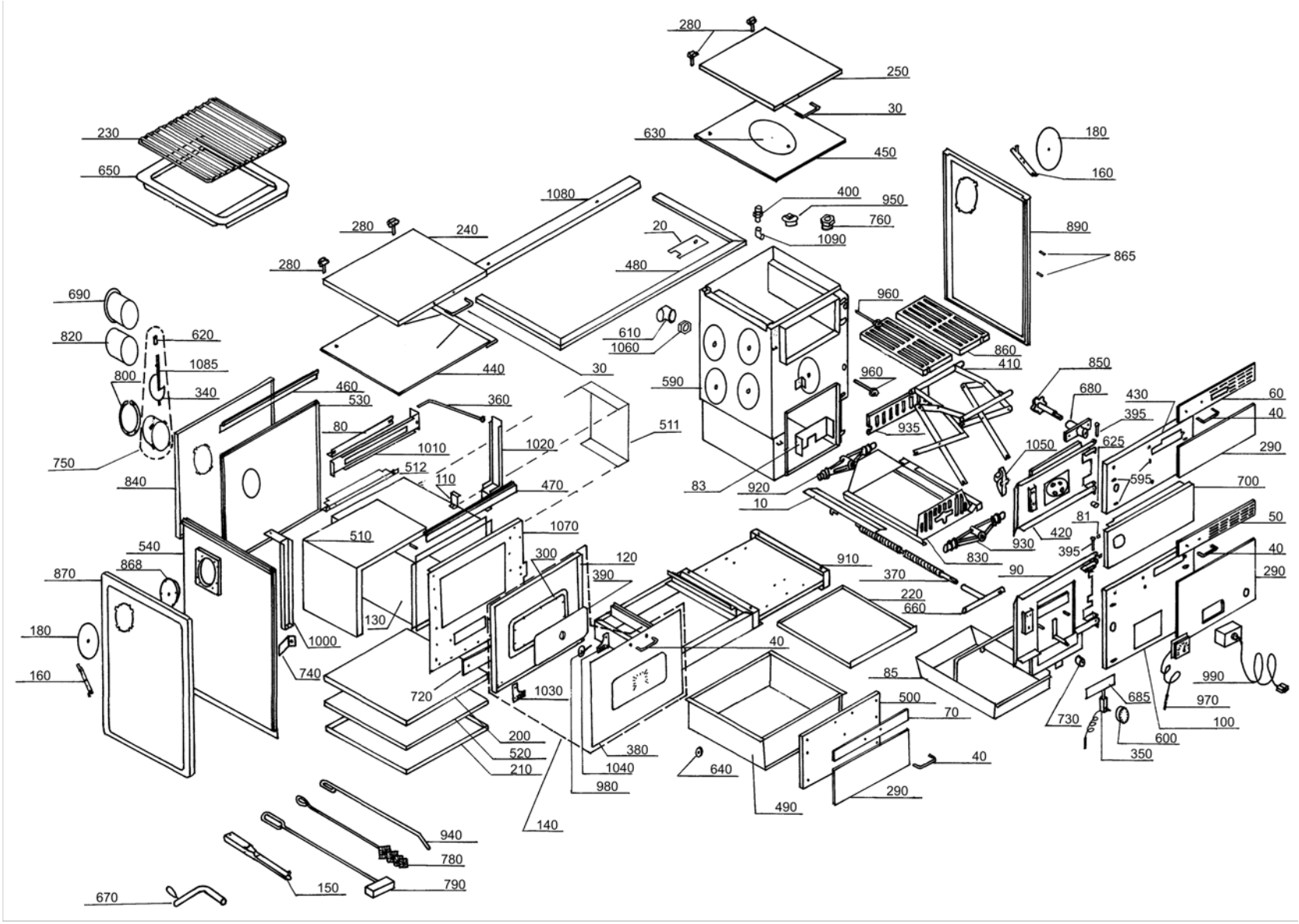
280
250
30
630
450
180
160
230
650
1080
400
950
760
1090
890
865
280
240
20
280
480
690
960
820
620
610
1060
860
410
1085
800
440
30
590
960
850
340
460
530
360
680
430
60
395
40
80
511
935
1010
1020
1050
625
290
750
512
110
470
83
920
595
700
840
10
81
50
510
1070
420
540
300
120
930
395
40
868
390
910
830
870
370
90
290
220
660
130
180
1000
40
85
990
160
740
720
1030
500
685
970
70
730
100
200
380
600
520
1040
640
40
350
210
980
290
490
140
940
780
150
790
670

Item no.	Article no.	Description	Serialnumber from	Serialnumber t
10	081582	Cover for threaded spindle for KSN,ZHN,VestoWIN Klassik 170-220	0	9999999999999
20	075574	Oven frame cover for VestoWIN Premium 200-202	0	9999999999999
30	004332	de: Alu-Griff LA 130mm,SH 45mm BR Deckel KSN,ZHN	0	9999999999999
36	025925	de: Knopf für Zweitluft D10x10 elox. KSN/ZHN	0	9999999999999
40	004340	de: Alu-Griff LA 130mm,SH 35mm BR, ZHN,KSN,ASN/E	0	9999999999999
50	004162	de: Alu-Türgriffblende eloxiert ZHN,KSN150/160/200 Heiztür	0	9999999999999
60	004634	de: Alu-Türgriffblende eloxiert KSN,ZHN 21 HT	0	9999999999999
70	004693	de: Alu-Türgriffblende ZHN Holzlade	0	9999999999999
80	067121	Heating flap for ZHL,ZHN,VestoWIN Premium 200-202 ZHN036	0	9999999999999
81	008893	de: Arretierung schwarz E/SKX,HMX,FKX,MIRA	0	9999999999999
83	081507	de: Aschekippblech (254x82x3) für KSN150/160/200 KSN110	0	9999999999999
85	080810	de: Aschelade für ZHN, KSN150/160/200	0	9999999999999
90	085294	de: Aschetür für ZHN 210	0	9999999999999
100	085383	de: Aschetürbombe für ZHN 210 (Ausführung Rauchabzug links)	0	9999999999999
110	069418	de: Auflage für Anheizklappe (39x33x1,5) ZHN 160/162	0	9999999999999
120	065005	de: Backrohr Innentür für ZHN	0	9999999999999
130	050301	Oven set for ZHN	0	9999999999999
140	085448	de: Backrohrtür für ZHN	0	9999999999999
150	073407	Operating handle for FKV,KSL,ZHL,FKN,FAX,ZHN,KSN,FKH,HMX,VestoWIN Premium 200-202, VestoWIN Klassik 170-220	0	9999999999999
160	080098	KSN0341 Fastening clip for dummy washer for HN,KSN,ASN/E, fittings cabinet Vesto 200	0	9999999999999
170	067911	Flue protection plate for ZHN, VestoWIN Premium 200-202	0	9999999999999
180	081221	de: Blindscheibe weiß für ASN,KSN,ZHN KSN134	0	9999999999999
180	082198	de: Blindscheibe braun für KSN,ASN,ZHN	0	9999999999999
200	066834	Buttom for ZHN,VEP	0	9999999999999
210	066842	Bottom for ZHN,VEP	0	9999999999999
220	080500	Ground tray (498x416x0,9) for ZHN,KSN150/160/200, VestoWIN Premium 200-202, VestoWIN Klassik 170	0	9999999999999
230	003174	Grid iron for ZHN, VestoWIN Premium 200-202	0	9999999999999
240	040800	de: Deckel weiß für ZHN Backrohrseite	0	9999999999999
240	086509	de: Deckel braun für ZHN Backrohrseite	0	9999999999999
250	040878	de: Deckel weiß ZHN 210 Kesselseite	0	9999999999999
250	085367	de: Deckel braun für ZHN 210 Kesselseite	0	9999999999999
280	004308	Cover hinge for KSN/ZHN, VestoWIN Klassik 170-220, VestoWIN Premium 200-202	0	9999999999999
290	503077	ZHN003 Dekor rotbraun zu ZHN 180/182	0	9999999999999
290	503079	ZHN006 Pearl white ZHN 180/182	0	9999999999999
290	503080	ZHN007 Sahara beige ZHN 180/182	0	9999999999999
290	503081	ZHN008 Brown beige ZHN 180/182	0	9999999999999
290	503083	ZHN010 Dark brown ZHN 180/182	0	9999999999999
300	004928	Glass fibre cord 5/5mm for FireWIN, ZHN, VestoWIN Premium 200-202	0	9999999999999
340	041693	Throttle flap for KSN210/250,ZHN18/21,VestoWIN Klassik 220	0	9999999999999
350	004030	Combustion controlling mechanism for KSN,ZHN,FKV,VestoWIN Klassik 170-220, VestoWIN Premium 200-202	0	9999999999999
360	067326	Heating flap linkage for ZHN160/210, VestoWIN Premium 200	0	9999999999999
370	081213	Threaded spindle (Ø20x377) for KSN,ZHN,VestoWIN Klassik 170-220, VestoWIN Premium 200-202	0	9999999999999
380	067703	de: Glasscheibe außen für ZHN-Backrohrtüre (543x383mm)	0	9999999999999
390	054003	de: Glasscheibe inkl. Thermometer für Backrohrtüre ZHN und VEP bis 01/2014	0	9999999999999
395	012998	de: HR-Stifte 6X41 gerändelt KSN,ZHN	0	9999999999999
400	004863	Manually operated bleeder VFR 3/8" for ZHN,KSN,GKW,NBE115,GKA/E,VestoWIN Klassik 170-220, VestoWIN Premium 200-202	0	9999999999999
410	080675	Lifting jack for ZHN,KSN160/200/150, VestoWIN Premium 200-202, VestoWIN Klassik 170	0	9999999999999
420	085340	de: Heiztür für ZHN 210	0	9999999999999
430	085405	de: Heiztürbombe für ZHN 210	0	9999999999999
440	004618	Oven hot plate (547x505x7mm) for ZHN160/180/210, VestoWIN Premium 200	0	9999999999999
440	048171	Hot plate - flue tube top for VestoWIN Premium 200	0	9999999999999

Item no.	Article no.	Description	Serialnumber from	Serialnumber t
450	004081	Boiler hot plate (418x505x7mm) for KSN160/200/150,ZHN18/21, VestoWIN Premium 200-202, VestoWIN Klassik 170	0	9999999999999
460	067598	de: Herdplattenauflage hinten für ZHN	0	9999999999999
470	067644	Hot plate support front for ZHN066, VestoWIN Premium 200-202	0	9999999999999
480	066710	Oven frame for ZHN210/212/180/182/173, VestoWIN Premium 200-202	0	9999999999999
490	050189	de: Holzlade mit Rollen für ZHN, VEP bis SN:104999	0	9999999999999
500	085421	de: Holzladebombe braun für ZHN	0	9999999999999
510	067091	Insolate sheet for ZHN	0	9999999999999
511	075442	Oven cover plate side for VestoWIN Premium 200-202	0	9999999999999
512	075450	de: Isolierblech hinten Backrohr ZHN (405X126X1-1,25)	0	9999999999999
520	060383	de: Isolierung für Backrohrboden für ZHN *ZHN0831	0	9999999999999
530	066826	de: Isolierwand hinten ZHN160/210,VEP200 bis SN: 104999	0	9999999999999
540	066893	de: Isolierwand seitlich für ZHN160/210,VEP200	0	9999999999999
590	060378	de: Kessel für ZHN 210/180 (Rauchabzug links)	0	9999999999999
591	060288	de: Zubehör für Kesseltausch für ZHN	0	9999999999999
595	023949	de: Hutfix SCO 6820 VERZ/GE Klammern Dekor ASN,ZHN,KSN,OEX	0	9999999999999
600	004057	Knob no.30.298-002-001 for ZHN,FKV,VestoWIN Klassik 170-220, VestoWIN Premium 200-202	0	9999999999999
610	012513	Knee no.95T 5/4“ for KSN, VestoWIN Premium 200-202, VestoWIN Klassik 170-220	0	9999999999999
620	023906	Throttle flap button (D10x15) for KSN,ZHN,VestoWIN Klassik 170-220, VestoWIN Premium 200-202	0	9999999999999
625	025925	de: Knopf für Zweitluft D10x10 elox. KSN/ZHN	0	9999999999999
630	056780	Smoke hole cover (Ø=220mm) for ZHN,KSN,KSL,VestoWIN Klassik 170-220	0	9999999999999
640	085332	de: Kohleladerad für Holzlade inkl.Schraube für ZHN,ZH	0	9999999999999
650	047084	Baking tray for ZHL,ZHN,VestoWIN Premium 200-202	0	9999999999999
660	081094	de: Kurbel für Hebevorrichtung für ZHN,KSN KSN192	0	9999999999999
670	085146	Crank for vibration device and grate lifting equipment for KSN,ZHN,VestoWIN Klassik 170-220	0	9999999999999
680	081043	de: Lagerbock für Rüttelachse für KSN,ZHN180/182,210/212	0	9999999999999
685	072362	de: Luftklappe für Feuerungsregler (191x82x0,75) für KSL,ZHL KSL317 ZHN,KSN150/160/200	0	9999999999999
690	075752	Wall support for KSL25,ZHL,KSN250,ZHN18/21,VestoWIN Klassik 220, VestoWIN Premium 200-202	0	9999999999999
700	066961	de: Mittelblende weiß für ZHN 210/212	0	9999999999999
700	067202	de: Mittelblende braun für ZHN 210/212 ZHN225	0	9999999999999
720	066613	de: Reinigungstür für ZHN	0	9999999999999
730	004065	KSN809 Knurled button for ZHN,KSN,VestoWIN Klassik 170-220, VestoWIN Premium 200-202, EasyWIN Klassik/Premium 180	0	9999999999999
740	067296	Flue gas baffle plate for ZHN, VestoWIN Premium 200-202	0	9999999999999
750	085472	Flue outlet with throttle flap for VestoWIN Premium 200-202	0	9999999999999
760	004014	KSN095 241 5/4“-1“ reduction nipple, black for KSN,ZHN,VestoWIN Klassik 170-220, VestoWIN Premium 200-202	0	9999999999999
780	000280	KSL194 Cleaning brush (680x80/57x40) for FKU,ZHN,KSN,ZHL,KS,FKX,VestoWIN Klassik 170-220, VestoWIN Premium 200-202	0	9999999999999
790	072192	Scratcher	0	9999999999999
800	067253	de: Ring für Rohrstutzen weiß für ZHN,KSN250 ZHN054	0	9999999999999
800	067938	de: Ring für Rohrstutzen braun für ZHN,KSN250 ZHN254	0	9999999999999
820	075744	KSL411 Smoke pipe for KSL25,ZHL,ZHN21/18,KSN250,VestoWIN Klassik 220	0	9999999999999
830	080292	KSN019 Grate support complete for ZHN,KSN160/200/150, VestoWIN Premium 200-202, VestoWIN Klassik 170	0	9999999999999
840	066761	Rear wall for ZHN160/210,VestoWIN Premium 200	0	9999999999999
850	080861	de: Rüttelachse (D16x133) KSN,ZHN KSN0051	0	9999999999999
860	004138	de: Rüttelrost (Mod.1-322-261) ZHN18/21,KSN150/200	0	9999999999999
865	008885	Locking pin, black Nr: 00910-000-000 FKN088, HMX,NBL,E/SKX,FKX	0	9999999999999
868	067911	Flue protection plate for ZHN, VestoWIN Premium 200-202	0	9999999999999
870	075183	de: Seitenwand links weiß kpl. KSN,ZHN	0	9999999999999
870	082147	de: Seitenwand links braun KSN/ZHN	0	9999999999999
890	075191	de: Seitenwand rechts weiß kpl. KSN,ZHN	0	9999999999999
890	082163	de: Seitenwand rechts braun KSN,ZHN	0	9999999999999
910	067792	de: Sockel schwarz für ZHN 210	0	9999999999999
920	060558	Nut for lifting equipment rear for ZHN210/212,KSN160/200/150,VestoWIN Klassik 170, VestoWIN Premium 200-202	0	9999999999999

Item no.	Article no.	Description	Serialnumber from	Serialnumber t
930	081485	Nut for lifting equipment front for ZHN210/212,KSN160/200/150,VestoWIN Klassik 170, VestoWIN Premium 200-202	0	9999999999999
935	082015	de: Stehrost für KSN 160/200/150, ZHN	0	9999999999999
940	072222	Poker (D9x750) for KSL,ZHL,ZHN,KSN,VestoWIN Klassik 170-220, VestoWIN Premium 200-202	0	9999999999999
950	004197	KSN094 WAF Plug no.290 5/4" for ZHN,KSN,Vesto WIN Klassik 170-220, VestoWIN Premium 200-202	0	9999999999999
960	005452	OK-915 Immersion sleeve (129 mm) No.55501.04 for EKX,OK/E,GWX,KSN,ZHN,OK-915,ETX,SNX,FKX,MIRA,FireWIN,VestoWIN Klassik 170-220,	0	9999999999999
970	004049	KSN027 Thermometer Z.Nr.SK 2014 IFC 52-052 KRF for ZHN,OEX,KSN,ASN,NBE,VestoWIN Premium 200-202, VestoWIN Klassik 170-220, fitting	0	9999999999999
980	054003	de: Glasscheibe inkl. Thermometer für Backrohrtüre ZHN und VEP bis 01/2014	0	9999999999999
990	010421	KSN100 Thermostat minimal 716 RU-9289 0-95 Grades for FK,GWX,KSN,ZHN,GSX,ETX,SNX,FKX,VestoWIN Klassik 170-220, VestoWIN Premium 20	0	9999999999999
1000	067199	Oven dividing/insulating wall for VestoWIN Premium 200-202	0	9999999999999
1010	067040	Dividing wall top for ZHN160/210,VestoWIN Premium 200	0	9999999999999
1020	067180	Dividing wall between boiler and oven for ZHN, VestoWIN Premium 200-202	0	9999999999999
1030	048063	de: Türscharnier links inkl.Schrauben für Backrohr ZHN	0	9999999999999
1040	048065	de: Türscharnier rechts inkl.Schrauben für Backrohr ZHN	0	9999999999999
1050	061840	KSN022 Door catch for KSN,ZHN,PMX, VestoWIN Premium 200-202, VestoWIN Klassik 170-220	0	9999999999999
1060	004413	KSN099 Union nut no.374 5/4“ for VestoWIN Premium 200-202, VestoWIN Klassik 170-220	0	9999999999999
1070	066745	de: Vorderwand für Backrohr für ZHN 160/210	0	9999999999999
1080	067679	Wall end plate (105x108x1,25) for ZHN210, VestoWIN Premium 200	0	9999999999999
1085	066567	KSN9492 Throttle flap shaft for KSN210/250,ZHN18/21,VestoWIN Klassik 170-220, VestoWIN Premium 200-202	0	9999999999999
1090	004006	KSN097 Bracket no.92 3/8“ for ZHN,KSN,VestoWIN Klassik 170-220, VestoWIN Premium 200-202	0	9999999999999

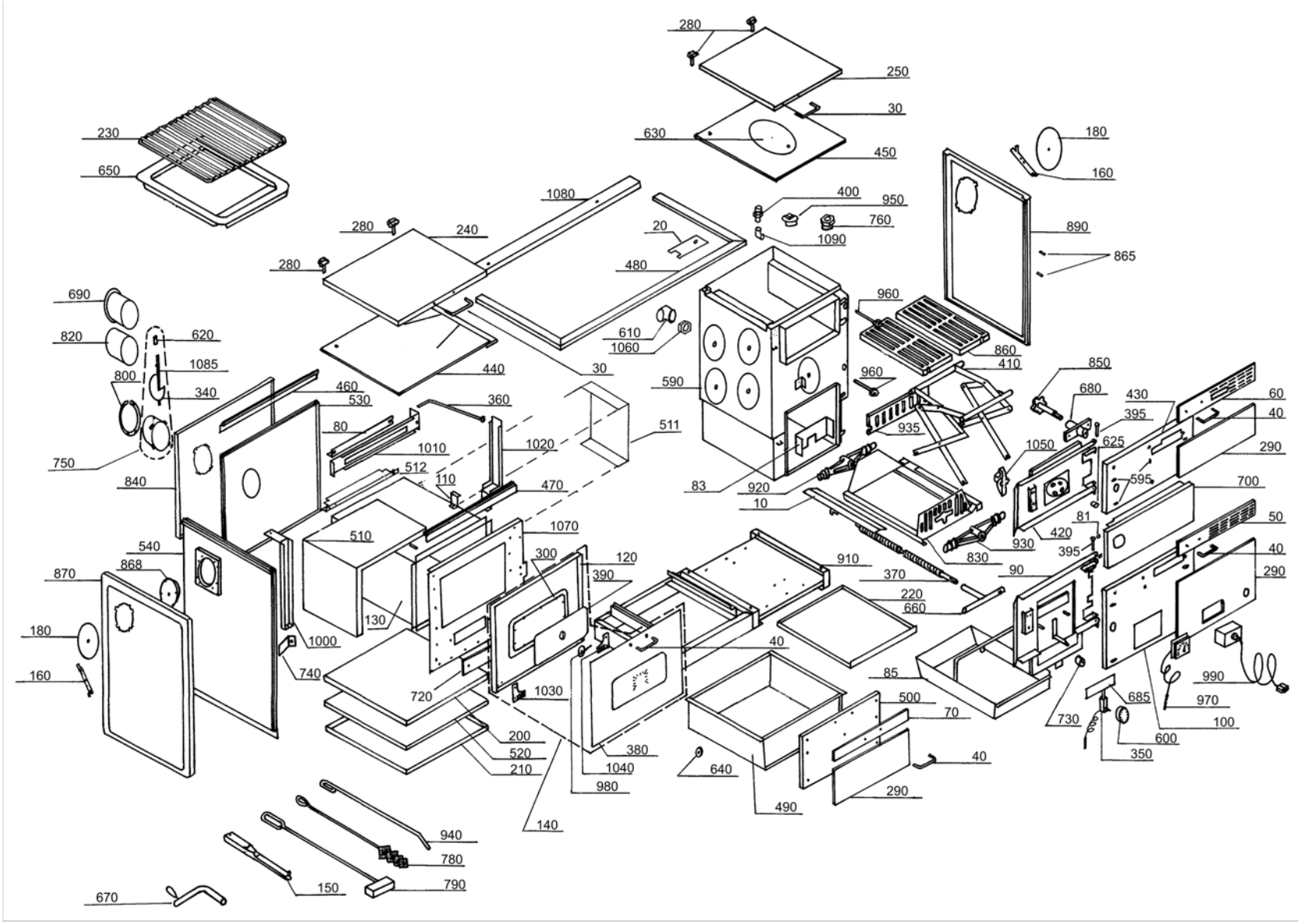
280
250
30
630
450
180
160
230
650
1080
400
950
760
1090
890
865
280
240
20
280
480
690
960
820
620
610
1060
860
410
1085
800
440
30
590
960
850
340
460
530
360
680
430
60
395
40
80
1010
1020
511
935
1050
625
290
750
512
110
470
83
920
10
595
700
840
1070
81
50
510
420
930
540
300
120
910
830
395
40
868
390
370
90
290
870
220
660
130
180
1000
40
85
990
160
740
720
1030
500
70
685
970
730
100
200
380
600
520
1040
640
40
350
210
980
290
490
140
940
780
150
790
670

Item no.	Article no.	Description	Serialnumber from	Serialnumber t
10	081582	Cover for threaded spindle for KSN,ZHN,VestoWIN Klassik 170-220	0	9999999999999
20	075574	Oven frame cover for VestoWIN Premium 200-202	0	9999999999999
30	004332	de: Alu-Griff LA 130mm,SH 45mm BR Deckel KSN,ZHN	0	9999999999999
36	025925	de: Knopf für Zweitluft D10x10 elox. KSN/ZHN	0	9999999999999
40	004340	de: Alu-Griff LA 130mm,SH 35mm BR, ZHN,KSN,ASN/E	0	9999999999999
50	004162	de: Alu-Türgriffblende eloxiert ZHN,KSN150/160/200 Heiztür	0	9999999999999
60	004634	de: Alu-Türgriffblende eloxiert KSN,ZHN 21 HT	0	9999999999999
70	004693	de: Alu-Türgriffblende ZHN Holzlade	0	9999999999999
80	067121	Heating flap for ZHL,ZHN,VestoWIN Premium 200-202 ZHN036	0	9999999999999
81	008893	de: Arretierung schwarz E/SKX,HMX,FKX,MIRA	0	9999999999999
83	081507	de: Aschekippblech (254x82x3) für KSN150/160/200 KSN110	0	9999999999999
85	080810	de: Aschelade für ZHN, KSN150/160/200	0	9999999999999
90	085294	de: Aschetür für ZHN 210	0	9999999999999
100	085383	de: Aschetürbombe für ZHN 210 (Ausführung Rauchabzug links)	0	9999999999999
110	069418	de: Auflage für Anheizklappe (39x33x1,5) ZHN 160/162	0	9999999999999
120	065005	de: Backrohr Innentür für ZHN	0	9999999999999
130	050301	Oven set for ZHN	0	9999999999999
140	085448	de: Backrohrtür für ZHN	0	9999999999999
150	073407	Operating handle for FKV,KSL,ZHL,FKN,FAX,ZHN,KSN,FKH,HMX,VestoWIN Premium 200-202, VestoWIN Klassik 170-220	0	9999999999999
160	080098	KSN0341 Fastening clip for dummy washer for HN,KSN,ASN/E, fittings cabinet Vesto 200	0	9999999999999
170	067911	Flue protection plate for ZHN, VestoWIN Premium 200-202	0	9999999999999
180	081221	de: Blindscheibe weiß für ASN,KSN,ZHN KSN134	0	9999999999999
180	082198	de: Blindscheibe braun für KSN,ASN,ZHN	0	9999999999999
200	066834	Buttom for ZHN,VEP	0	9999999999999
210	066842	Bottom for ZHN,VEP	0	9999999999999
220	080500	Ground tray (498x416x0,9) for ZHN,KSN150/160/200, VestoWIN Premium 200-202, VestoWIN Klassik 170	0	9999999999999
230	003174	Grid iron for ZHN, VestoWIN Premium 200-202	0	9999999999999
240	040800	de: Deckel weiß für ZHN Backrohrseite	0	9999999999999
240	086509	de: Deckel braun für ZHN Backrohrseite	0	9999999999999
250	040878	de: Deckel weiß ZHN 210 Kesselseite	0	9999999999999
250	085367	de: Deckel braun für ZHN 210 Kesselseite	0	9999999999999
280	004308	Cover hinge for KSN/ZHN, VestoWIN Klassik 170-220, VestoWIN Premium 200-202	0	9999999999999
290	503077	ZHN003 Dekor rotbraun zu ZHN 180/182	0	9999999999999
290	503079	ZHN006 Pearl white ZHN 180/182	0	9999999999999
290	503080	ZHN007 Sahara beige ZHN 180/182	0	9999999999999
290	503081	ZHN008 Brown beige ZHN 180/182	0	9999999999999
290	503083	ZHN010 Dark brown ZHN 180/182	0	9999999999999
300	004928	Glass fibre cord 5/5mm for FireWIN, ZHN, VestoWIN Premium 200-202	0	9999999999999
340	041693	Throttle flap for KSN210/250,ZHN18/21,VestoWIN Klassik 220	0	9999999999999
350	004030	Combustion controlling mechanism for KSN,ZHN,FKV,VestoWIN Klassik 170-220, VestoWIN Premium 200-202	0	9999999999999
360	067326	Heating flap linkage for ZHN160/210, VestoWIN Premium 200	0	9999999999999
370	081213	Threaded spindle (Ø20x377) for KSN,ZHN,VestoWIN Klassik 170-220, VestoWIN Premium 200-202	0	9999999999999
380	067703	de: Glasscheibe außen für ZHN-Backrohrtüre (543x383mm)	0	9999999999999
390	054003	de: Glasscheibe inkl. Thermometer für Backrohrtüre ZHN und VEP bis 01/2014	0	9999999999999
395	012998	de: HR-Stifte 6X41 gerändelt KSN,ZHN	0	9999999999999
400	004863	Manually operated bleeder VFR 3/8" for ZHN,KSN,GKW,NBE115,GKA/E,VestoWIN Klassik 170-220, VestoWIN Premium 200-202	0	9999999999999
410	080675	Lifting jack for ZHN,KSN160/200/150, VestoWIN Premium 200-202, VestoWIN Klassik 170	0	9999999999999
420	085340	de: Heiztür für ZHN 210	0	9999999999999
430	085405	de: Heiztürbombe für ZHN 210	0	9999999999999
440	004618	Oven hot plate (547x505x7mm) for ZHN160/180/210, VestoWIN Premium 200	0	9999999999999
440	048171	Hot plate - flue tube top for VestoWIN Premium 200	0	9999999999999

Item no.	Article no.	Description	Serialnumber from	Serialnumber t
450	004081	Boiler hot plate (418x505x7mm) for KSN160/200/150,ZHN18/21, VestoWIN Premium 200-202, VestoWIN Klassik 170	0	9999999999999
460	067598	de: Herdplattenauflage hinten für ZHN	0	9999999999999
470	067644	Hot plate support front for ZHN066, VestoWIN Premium 200-202	0	9999999999999
480	066710	Oven frame for ZHN210/212/180/182/173, VestoWIN Premium 200-202	0	9999999999999
490	050189	de: Holzlade mit Rollen für ZHN, VEP bis SN:104999	0	9999999999999
500	085421	de: Holzladebombe braun für ZHN	0	9999999999999
510	067091	Insolate sheet for ZHN	0	9999999999999
511	075442	Oven cover plate side for VestoWIN Premium 200-202	0	9999999999999
512	075450	de: Isolierblech hinten Backrohr ZHN (405X126X1-1,25)	0	9999999999999
520	060383	de: Isolierung für Backrohrboden für ZHN *ZHN0831	0	9999999999999
530	066826	de: Isolierwand hinten ZHN160/210,VEP200 bis SN: 104999	0	9999999999999
540	066893	de: Isolierwand seitlich für ZHN160/210,VEP200	0	9999999999999
590	060378	de: Kessel für ZHN 210/180 (Rauchabzug links)	0	9999999999999
591	060288	de: Zubehör für Kesseltausch für ZHN	0	9999999999999
595	023949	de: Hutfix SCO 6820 VERZ/GE Klammern Dekor ASN,ZHN,KSN,OEX	0	9999999999999
600	004057	Knob no.30.298-002-001 for ZHN,FKV,VestoWIN Klassik 170-220, VestoWIN Premium 200-202	0	9999999999999
610	012513	Knee no.95T 5/4“ for KSN, VestoWIN Premium 200-202, VestoWIN Klassik 170-220	0	9999999999999
620	023906	Throttle flap button (D10x15) for KSN,ZHN,VestoWIN Klassik 170-220, VestoWIN Premium 200-202	0	9999999999999
625	025925	de: Knopf für Zweitluft D10x10 elox. KSN/ZHN	0	9999999999999
630	056780	Smoke hole cover (Ø=220mm) for ZHN,KSN,KSL,VestoWIN Klassik 170-220	0	9999999999999
640	085332	de: Kohleladerad für Holzlade inkl.Schraube für ZHN,ZH	0	9999999999999
650	047084	Baking tray for ZHL,ZHN,VestoWIN Premium 200-202	0	9999999999999
660	081094	de: Kurbel für Hebevorrichtung für ZHN,KSN KSN192	0	9999999999999
670	085146	Crank for vibration device and grate lifting equipment for KSN,ZHN,VestoWIN Klassik 170-220	0	9999999999999
680	081043	de: Lagerbock für Rüttelachse für KSN,ZHN180/182,210/212	0	9999999999999
685	072362	de: Luftklappe für Feuerungsregler (191x82x0,75) für KSL,ZHL KSL317 ZHN,KSN150/160/200	0	9999999999999
690	075752	Wall support for KSL25,ZHL,KSN250,ZHN18/21,VestoWIN Klassik 220, VestoWIN Premium 200-202	0	9999999999999
700	066961	de: Mittelblende weiß für ZHN 210/212	0	9999999999999
700	067202	de: Mittelblende braun für ZHN 210/212 ZHN225	0	9999999999999
720	066613	de: Reinigungstür für ZHN	0	9999999999999
730	004065	KSN809 Knurled button for ZHN,KSN,VestoWIN Klassik 170-220, VestoWIN Premium 200-202, EasyWIN Klassik/Premium 180	0	9999999999999
740	067296	Flue gas baffle plate for ZHN, VestoWIN Premium 200-202	0	9999999999999
750	085472	Flue outlet with throttle flap for VestoWIN Premium 200-202	0	9999999999999
760	004014	KSN095 241 5/4“-1“ reduction nipple, black for KSN,ZHN,VestoWIN Klassik 170-220, VestoWIN Premium 200-202	0	9999999999999
780	000280	KSL194 Cleaning brush (680x80/57x40) for FKU,ZHN,KSN,ZHL,KS,FKX,VestoWIN Klassik 170-220, VestoWIN Premium 200-202	0	9999999999999
790	072192	Scratcher	0	9999999999999
800	067253	de: Ring für Rohrstutzen weiß für ZHN,KSN250 ZHN054	0	9999999999999
800	067938	de: Ring für Rohrstutzen braun für ZHN,KSN250 ZHN254	0	9999999999999
820	075744	KSL411 Smoke pipe for KSL25,ZHL,ZHN21/18,KSN250,VestoWIN Klassik 220	0	9999999999999
830	080292	KSN019 Grate support complete for ZHN,KSN160/200/150, VestoWIN Premium 200-202, VestoWIN Klassik 170	0	9999999999999
840	066761	Rear wall for ZHN160/210,VestoWIN Premium 200	0	9999999999999
850	080861	de: Rüttelachse (D16x133) KSN,ZHN KSN0051	0	9999999999999
860	004138	de: Rüttelrost (Mod.1-322-261) ZHN18/21,KSN150/200	0	9999999999999
865	008885	Locking pin, black Nr: 00910-000-000 FKN088, HMX,NBL,E/SKX,FKX	0	9999999999999
868	067911	Flue protection plate for ZHN, VestoWIN Premium 200-202	0	9999999999999
870	075183	de: Seitenwand links weiß kpl. KSN,ZHN	0	9999999999999
870	082147	de: Seitenwand links braun KSN/ZHN	0	9999999999999
890	075191	de: Seitenwand rechts weiß kpl. KSN,ZHN	0	9999999999999
890	082163	de: Seitenwand rechts braun KSN,ZHN	0	9999999999999
910	067792	de: Sockel schwarz für ZHN 210	0	9999999999999
920	060558	Nut for lifting equipment rear for ZHN210/212,KSN160/200/150,VestoWIN Klassik 170, VestoWIN Premium 200-202	0	9999999999999

Item no.	Article no.	Description	Serialnumber from	Serialnumber t
930	081485	Nut for lifting equipment front for ZHN210/212,KSN160/200/150,VestoWIN Klassik 170, VestoWIN Premium 200-202	0	9999999999999
935	082015	de: Stehrost für KSN 160/200/150, ZHN	0	9999999999999
940	072222	Poker (D9x750) for KSL,ZHL,ZHN,KSN,VestoWIN Klassik 170-220, VestoWIN Premium 200-202	0	9999999999999
950	004197	KSN094 WAF Plug no.290 5/4" for ZHN,KSN,Vesto WIN Klassik 170-220, VestoWIN Premium 200-202	0	9999999999999
960	005452	OK-915 Immersion sleeve (129 mm) No.55501.04 for EKX,OK/E,GWX,KSN,ZHN,OK-915,ETX,SNX,FKX,MIRA,FireWIN,VestoWIN Klassik 170-220,	0	9999999999999
970	004049	KSN027 Thermometer Z.Nr.SK 2014 IFC 52-052 KRF for ZHN,OEX,KSN,ASN,NBE,VestoWIN Premium 200-202, VestoWIN Klassik 170-220, fitting	0	9999999999999
980	054003	de: Glasscheibe inkl. Thermometer für Backrohrtüre ZHN und VEP bis 01/2014	0	9999999999999
990	010421	KSN100 Thermostat minimal 716 RU-9289 0-95 Grades for FK,GWX,KSN,ZHN,GSX,ETX,SNX,FKX,VestoWIN Klassik 170-220, VestoWIN Premium 20	0	9999999999999
1000	067199	Oven dividing/insulating wall for VestoWIN Premium 200-202	0	9999999999999
1010	067040	Dividing wall top for ZHN160/210,VestoWIN Premium 200	0	9999999999999
1020	067180	Dividing wall between boiler and oven for ZHN, VestoWIN Premium 200-202	0	9999999999999
1030	048063	de: Türscharnier links inkl.Schrauben für Backrohr ZHN	0	9999999999999
1040	048065	de: Türscharnier rechts inkl.Schrauben für Backrohr ZHN	0	9999999999999
1050	061840	KSN022 Door catch for KSN,ZHN,PMX, VestoWIN Premium 200-202, VestoWIN Klassik 170-220	0	9999999999999
1060	004413	KSN099 Union nut no.374 5/4“ for VestoWIN Premium 200-202, VestoWIN Klassik 170-220	0	9999999999999
1070	066745	de: Vorderwand für Backrohr für ZHN 160/210	0	9999999999999
1080	067679	Wall end plate (105x108x1,25) for ZHN210, VestoWIN Premium 200	0	9999999999999
1085	066567	KSN9492 Throttle flap shaft for KSN210/250,ZHN18/21,VestoWIN Klassik 170-220, VestoWIN Premium 200-202	0	9999999999999
1090	004006	KSN097 Bracket no.92 3/8“ for ZHN,KSN,VestoWIN Klassik 170-220, VestoWIN Premium 200-202	0	9999999999999

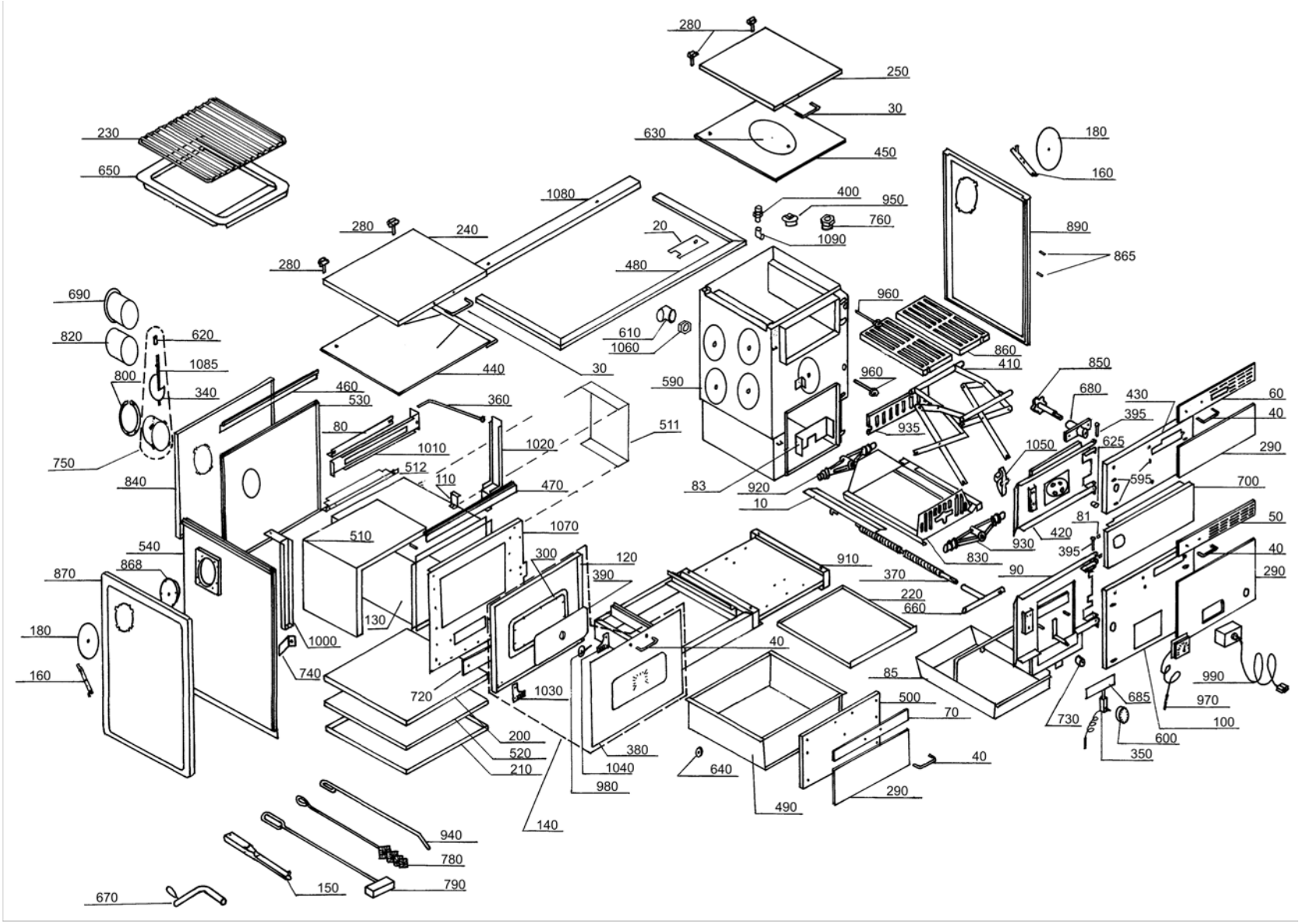
280
250
30
630
450
180
160
230
650
1080
400
950
760
1090
890
865
280
240
20
280
480
690
960
820
620
610
1060
860
410
1085
800
440
30
590
960
850
340
460
530
360
680
430
60
395
40
80
511
935
1010
1020
1050
625
290
750
512
110
470
83
920
595
700
840
10
81
50
510
1070
420
930
540
300
120
910
830
395
40
868
390
370
90
290
870
220
660
130
180
1000
40
85
990
160
740
720
1030
500
685
970
70
730
100
200
380
600
520
1040
640
40
350
210
980
290
490
140
940
780
150
790
670

Item no.	Article no.	Description	Serialnumber from	Serialnumber t
10	081582	Cover for threaded spindle for KSN,ZHN,VestoWIN Klassik 170-220	0	9999999999999
20	075574	Oven frame cover for VestoWIN Premium 200-202	0	9999999999999
30	004332	de: Alu-Griff LA 130mm,SH 45mm BR Deckel KSN,ZHN	0	9999999999999
36	025925	de: Knopf für Zweitluft D10x10 elox. KSN/ZHN	0	9999999999999
40	004340	de: Alu-Griff LA 130mm,SH 35mm BR, ZHN,KSN,ASN/E	0	9999999999999
50	004162	de: Alu-Türgriffblende eloxiert ZHN,KSN150/160/200 Heiztür	0	9999999999999
60	004634	de: Alu-Türgriffblende eloxiert KSN,ZHN 21 HT	0	9999999999999
70	004693	de: Alu-Türgriffblende ZHN Holzlade	0	9999999999999
80	067121	Heating flap for ZHL,ZHN,VestoWIN Premium 200-202 ZHN036	0	9999999999999
81	008893	de: Arretierung schwarz E/SKX,HMX,FKX,MIRA	0	9999999999999
83	081507	de: Aschekippblech (254x82x3) für KSN150/160/200 KSN110	0	9999999999999
85	080810	de: Aschelade für ZHN, KSN150/160/200	0	9999999999999
90	085308	de: Aschetür für ZHN 212,KSN150/160/200	0	9999999999999
100	085391	de: Blende Aschetür braun ZHN 212,KSN150/160/200 KSN0121	0	9999999999999
110	069418	de: Auflage für Anheizklappe (39x33x1,5) ZHN 160/162	0	9999999999999
120	065005	de: Backrohr Innentür für ZHN	0	9999999999999
130	050301	Oven set for ZHN	0	9999999999999
140	085448	de: Backrohrtür für ZHN	0	9999999999999
150	073407	Operating handle for FKV,KSL,ZHL,FKN,FAX,ZHN,KSN,FKH,HMX,VestoWIN Premium 200-202, VestoWIN Klassik 170-220	0	9999999999999
160	080098	KSN0341 Fastening clip for dummy washer for HN,KSN,ASN/E, fittings cabinet Vesto 200	0	9999999999999
170	067911	Flue protection plate for ZHN, VestoWIN Premium 200-202	0	9999999999999
180	081221	de: Blindscheibe weiß für ASN,KSN,ZHN KSN134	0	9999999999999
180	082198	de: Blindscheibe braun für KSN,ASN,ZHN	0	9999999999999
200	066834	Buttom for ZHN,VEP	0	9999999999999
210	066842	Bottom for ZHN,VEP	0	9999999999999
220	080500	Ground tray (498x416x0,9) for ZHN,KSN150/160/200, VestoWIN Premium 200-202, VestoWIN Klassik 170	0	9999999999999
230	003174	Grid iron for ZHN, VestoWIN Premium 200-202	0	9999999999999
240	040800	de: Deckel weiß für ZHN Backrohrseite	0	9999999999999
240	086509	de: Deckel braun für ZHN Backrohrseite	0	9999999999999
250	076880	de: Deckel weiß für KSN 150/160/200,ZHN 212 Kesselseite KSN086	0	9999999999999
250	085375	de: Deckel braun KSN 150/160/200,ZHN 212 für Kesselseite	0	9999999999999
280	004308	Cover hinge for KSN/ZHN, VestoWIN Klassik 170-220, VestoWIN Premium 200-202	0	9999999999999
290	503077	ZHN003 Dekor rotbraun zu ZHN 180/182	0	9999999999999
290	503079	ZHN006 Pearl white ZHN 180/182	0	9999999999999
290	503080	ZHN007 Sahara beige ZHN 180/182	0	9999999999999
290	503081	ZHN008 Brown beige ZHN 180/182	0	9999999999999
290	503083	ZHN010 Dark brown ZHN 180/182	0	9999999999999
300	004928	Glass fibre cord 5/5mm for FireWIN, ZHN, VestoWIN Premium 200-202	0	9999999999999
340	041693	Throttle flap for KSN210/250,ZHN18/21,VestoWIN Klassik 220	0	9999999999999
350	004030	Combustion controlling mechanism for KSN,ZHN,FKV,VestoWIN Klassik 170-220, VestoWIN Premium 200-202	0	9999999999999
360	067148	Heating flap linkage for ZHN162/212, ZHN0364, VestoWIN Premium 202	0	9999999999999
370	081213	Threaded spindle (Ø20x377) for KSN,ZHN,VestoWIN Klassik 170-220, VestoWIN Premium 200-202	0	9999999999999
380	067703	de: Glasscheibe außen für ZHN-Backrohrtüre (543x383mm)	0	9999999999999
390	054003	de: Glasscheibe inkl. Thermometer für Backrohrtüre ZHN und VEP bis 01/2014	0	9999999999999
395	012998	de: HR-Stifte 6X41 gerändelt KSN,ZHN	0	9999999999999
400	004863	Manually operated bleeder VFR 3/8" for ZHN,KSN,GKW,NBE115,GKA/E,VestoWIN Klassik 170-220, VestoWIN Premium 200-202	0	9999999999999
410	080675	Lifting jack for ZHN,KSN160/200/150, VestoWIN Premium 200-202, VestoWIN Klassik 170	0	9999999999999
420	085359	de: Heiztür für KSN 160/200/150,ZHN 212	0	9999999999999
430	088986	de: Blende Heiztür braun KSN150/160/200,ZHN212/182 KSN0141	0	9999999999999
440	004626	Oven hot plate (547x505x7mm) for ZHN162/182/212 ZHN0621, VestoWIN Premium 202	0	9999999999999
440	048172	Hot plate - flue tube top for VestoWIN Premium 202	0	9999999999999

Item no.	Article no.	Description	Serialnumber from	Serialnumber t
450	004081	Boiler hot plate (418x505x7mm) for KSN160/200/150,ZHN18/21, VestoWIN Premium 200-202, VestoWIN Klassik 170	0	9999999999999
460	067598	de: Herdplattenauflage hinten für ZHN	0	9999999999999
470	067644	Hot plate support front for ZHN066, VestoWIN Premium 200-202	0	9999999999999
480	066710	Oven frame for ZHN210/212/180/182/173, VestoWIN Premium 200-202	0	9999999999999
490	050189	de: Holzlade mit Rollen für ZHN, VEP bis SN:104999	0	9999999999999
500	085421	de: Holzladebombe braun für ZHN	0	9999999999999
510	067091	Insolate sheet for ZHN	0	9999999999999
511	075442	Oven cover plate side for VestoWIN Premium 200-202	0	9999999999999
512	075450	de: Isolierblech hinten Backrohr ZHN (405X126X1-1,25)	0	9999999999999
520	060383	de: Isolierung für Backrohrboden für ZHN *ZHN0831	0	9999999999999
530	066818	Insolate rear wall ZHN162/212,VEP202 to lot 4	0	9999999999999
540	066885	Insolate sidewards ZHN162/212,VEP202	0	9999999999999
590	060379	de: Kessel für ZHN 212/182 (Rauchabzug rechts)	0	9999999999999
591	060288	de: Zubehör für Kesseltausch für ZHN	0	9999999999999
595	023949	de: Hutfix SCO 6820 VERZ/GE Klammern Dekor ASN,ZHN,KSN,OEX	0	9999999999999
600	004057	Knob no.30.298-002-001 for ZHN,FKV,VestoWIN Klassik 170-220, VestoWIN Premium 200-202	0	9999999999999
610	012513	Knee no.95T 5/4“ for KSN, VestoWIN Premium 200-202, VestoWIN Klassik 170-220	0	9999999999999
620	023906	Throttle flap button (D10x15) for KSN,ZHN,VestoWIN Klassik 170-220, VestoWIN Premium 200-202	0	9999999999999
625	025925	de: Knopf für Zweitluft D10x10 elox. KSN/ZHN	0	9999999999999
630	056780	Smoke hole cover (Ø=220mm) for ZHN,KSN,KSL,VestoWIN Klassik 170-220	0	9999999999999
640	085332	de: Kohleladerad für Holzlade inkl.Schraube für ZHN,ZH	0	9999999999999
650	047084	Baking tray for ZHL,ZHN,VestoWIN Premium 200-202	0	9999999999999
660	081094	de: Kurbel für Hebevorrichtung für ZHN,KSN KSN192	0	9999999999999
670	085146	Crank for vibration device and grate lifting equipment for KSN,ZHN,VestoWIN Klassik 170-220	0	9999999999999
680	081043	de: Lagerbock für Rüttelachse für KSN,ZHN180/182,210/212	0	9999999999999
685	072362	de: Luftklappe für Feuerungsregler (191x82x0,75) für KSL,ZHL KSL317 ZHN,KSN150/160/200	0	9999999999999
690	075752	Wall support for KSL25,ZHL,KSN250,ZHN18/21,VestoWIN Klassik 220, VestoWIN Premium 200-202	0	9999999999999
700	066961	de: Mittelblende weiß für ZHN 210/212	0	9999999999999
700	067202	de: Mittelblende braun für ZHN 210/212 ZHN225	0	9999999999999
720	066613	de: Reinigungstür für ZHN	0	9999999999999
730	004065	KSN809 Knurled button for ZHN,KSN,VestoWIN Klassik 170-220, VestoWIN Premium 200-202, EasyWIN Klassik/Premium 180	0	9999999999999
740	067296	Flue gas baffle plate for ZHN, VestoWIN Premium 200-202	0	9999999999999
750	085472	Flue outlet with throttle flap for VestoWIN Premium 200-202	0	9999999999999
760	004014	KSN095 241 5/4“-1“ reduction nipple, black for KSN,ZHN,VestoWIN Klassik 170-220, VestoWIN Premium 200-202	0	9999999999999
780	000280	KSL194 Cleaning brush (680x80/57x40) for FKU,ZHN,KSN,ZHL,KS,FKX,VestoWIN Klassik 170-220, VestoWIN Premium 200-202	0	9999999999999
790	072192	Scratcher	0	9999999999999
800	067253	de: Ring für Rohrstutzen weiß für ZHN,KSN250 ZHN054	0	9999999999999
800	067938	de: Ring für Rohrstutzen braun für ZHN,KSN250 ZHN254	0	9999999999999
820	075744	KSL411 Smoke pipe for KSL25,ZHL,ZHN21/18,KSN250,VestoWIN Klassik 220	0	9999999999999
830	080292	KSN019 Grate support complete for ZHN,KSN160/200/150, VestoWIN Premium 200-202, VestoWIN Klassik 170	0	9999999999999
840	066753	Rear wall for ZHN162/212,VestoWIN Premium 202	0	9999999999999
850	080861	de: Rüttelachse (D16x133) KSN,ZHN KSN0051	0	9999999999999
860	004138	de: Rüttelrost (Mod.1-322-261) ZHN18/21,KSN150/200	0	9999999999999
865	008885	Locking pin, black Nr: 00910-000-000 FKN088, HMX,NBL,E/SKX,FKX	0	9999999999999
868	067911	Flue protection plate for ZHN, VestoWIN Premium 200-202	0	9999999999999
870	075183	de: Seitenwand links weiß kpl. KSN,ZHN	0	9999999999999
870	082147	de: Seitenwand links braun KSN/ZHN	0	9999999999999
890	075191	de: Seitenwand rechts weiß kpl. KSN,ZHN	0	9999999999999
890	082163	de: Seitenwand rechts braun KSN,ZHN	0	9999999999999
910	066133	de: Sockel schwarz für ZHN 212	0	9999999999999
920	060558	Nut for lifting equipment rear for ZHN210/212,KSN160/200/150,VestoWIN Klassik 170, VestoWIN Premium 200-202	0	9999999999999

Item no.	Article no.	Description	Serialnumber from	Serialnumber t
930	081485	Nut for lifting equipment front for ZHN210/212,KSN160/200/150,VestoWIN Klassik 170, VestoWIN Premium 200-202	0	9999999999999
935	082015	de: Stehrost für KSN 160/200/150, ZHN	0	9999999999999
940	072222	Poker (D9x750) for KSL,ZHL,ZHN,KSN,VestoWIN Klassik 170-220, VestoWIN Premium 200-202	0	9999999999999
950	004197	KSN094 WAF Plug no.290 5/4" for ZHN,KSN,Vesto WIN Klassik 170-220, VestoWIN Premium 200-202	0	9999999999999
960	005452	OK-915 Immersion sleeve (129 mm) No.55501.04 for EKX,OK/E,GWX,KSN,ZHN,OK-915,ETX,SNX,FKX,MIRA,FireWIN,VestoWIN Klassik 170-220,	0	9999999999999
970	004049	KSN027 Thermometer Z.Nr.SK 2014 IFC 52-052 KRF for ZHN,OEX,KSN,ASN,NBE,VestoWIN Premium 200-202, VestoWIN Klassik 170-220, fitting	0	9999999999999
980	054003	de: Glasscheibe inkl. Thermometer für Backrohrtüre ZHN und VEP bis 01/2014	0	9999999999999
990	010421	KSN100 Thermostat minimal 716 RU-9289 0-95 Grades for FK,GWX,KSN,ZHN,GSX,ETX,SNX,FKX,VestoWIN Klassik 170-220, VestoWIN Premium 20	0	9999999999999
1000	067199	Oven dividing/insulating wall for VestoWIN Premium 200-202	0	9999999999999
1010	067113	Dividing wall top for ZHN162/212,VestoWIN Premium 202	0	9999999999999
1020	067180	Dividing wall between boiler and oven for ZHN, VestoWIN Premium 200-202	0	9999999999999
1030	048063	de: Türscharnier links inkl.Schrauben für Backrohr ZHN	0	9999999999999
1040	048065	de: Türscharnier rechts inkl.Schrauben für Backrohr ZHN	0	9999999999999
1050	061840	KSN022 Door catch for KSN,ZHN,PMX, VestoWIN Premium 200-202, VestoWIN Klassik 170-220	0	9999999999999
1060	004413	KSN099 Union nut no.374 5/4“ for VestoWIN Premium 200-202, VestoWIN Klassik 170-220	0	9999999999999
1070	066397	de: Vorderwand für Backrohr für ZHN 162/212	0	9999999999999
1080	066737	de: Wandabschlußleiste (105x108x1,25) ZHN 212/VEP202	0	9999999999999
1085	066567	KSN9492 Throttle flap shaft for KSN210/250,ZHN18/21,VestoWIN Klassik 170-220, VestoWIN Premium 200-202	0	9999999999999
1090	004006	KSN097 Bracket no.92 3/8“ for ZHN,KSN,VestoWIN Klassik 170-220, VestoWIN Premium 200-202	0	9999999999999

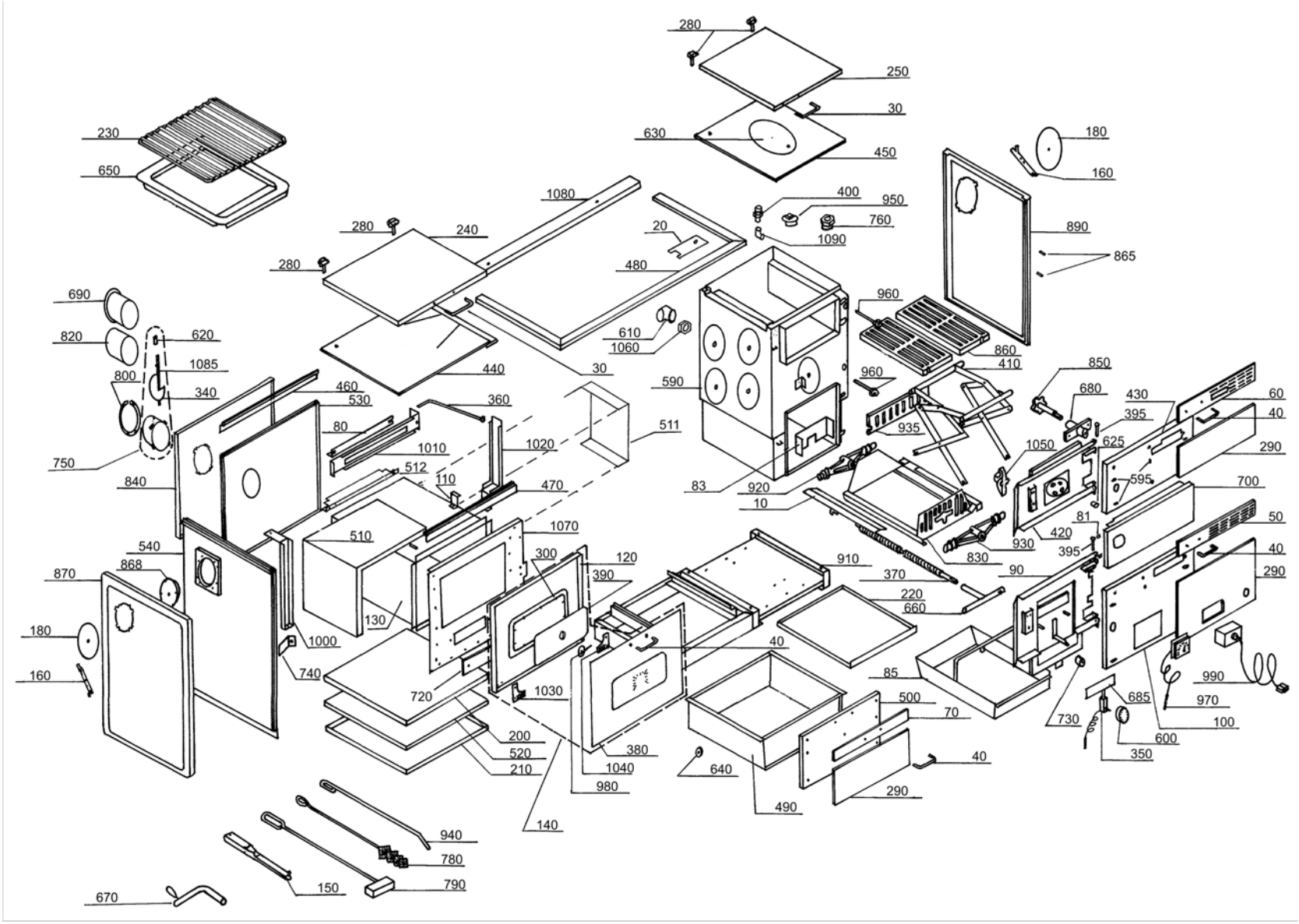
280
250
30
630
450
180
160
230
650
1080
400
950
760
1090
890
865
280
240
20
280
480
690
960
820
620
610
1060
860
410
1085
800
440
30
590
960
850
340
460
530
360
680
430
60
395
40
80
511
935
1010
1020
1050
625
290
750
512
110
470
83
920
595
700
840
10
81
50
1070
510
420
930
540
300
120
910
830
395
40
868
390
370
90
290
870
220
660
130
180
1000
40
85
990
160
740
720
1030
500
685
970
70
730
100
200
380
600
520
1040
640
40
350
210
980
290
490
140
940
780
150
790
670

Item no.	Article no.	Description	Serialnumber from	Serialnumber
10	081582	Cover for threaded spindle for KSN,ZHN,VestoWIN Klassik 170-220	0	9999999999999
20	075574	Oven frame cover for VestoWIN Premium 200-202	0	9999999999999
30	004332	de: Alu-Griff LA 130mm,SH 45mm BR Deckel KSN,ZHN	0	9999999999999
36	025925	de: Knopf für Zweitluft D10x10 elox. KSN/ZHN	0	9999999999999
40	004340	de: Alu-Griff LA 130mm,SH 35mm BR, ZHN,KSN,ASN/E	0	9999999999999
50	004162	de: Alu-Türgriffblende eloxiert ZHN,KSN150/160/200 Heiztür	0	9999999999999
60	004634	de: Alu-Türgriffblende eloxiert KSN,ZHN 21 HT	0	9999999999999
70	004693	de: Alu-Türgriffblende ZHN Holzlade	0	9999999999999
80	067121	Heating flap for ZHL,ZHN,VestoWIN Premium 200-202 ZHN036	0	9999999999999
81	008893	de: Arretierung schwarz E/SKX,HMX,FKX,MIRA	0	9999999999999
83	081507	de: Aschekippblech (254x82x3) für KSN150/160/200 KSN110	0	9999999999999
85	080810	de: Aschelade für ZHN, KSN150/160/200	0	9999999999999
90	085308	de: Aschetür für ZHN 212,KSN150/160/200	0	9999999999999
100	085391	de: Blende Aschetür braun ZHN 212,KSN150/160/200 KSN0121	0	9999999999999
110	069418	de: Auflage für Anheizklappe (39x33x1,5) ZHN 160/162	0	9999999999999
120	065005	de: Backrohr Innentür für ZHN	0	9999999999999
130	050301	Oven set for ZHN	0	9999999999999
140	085448	de: Backrohrtür für ZHN	0	9999999999999
150	073407	Operating handle for FKV,KSL,ZHL,FKN,FAX,ZHN,KSN,FKH,HMX,VestoWIN Premium 200-202, VestoWIN Klassik 170-220	0	9999999999999
160	080098	KSN0341 Fastening clip for dummy washer for HN,KSN,ASN/E, fittings cabinet Vesto 200	0	9999999999999
170	067911	Flue protection plate for ZHN, VestoWIN Premium 200-202	0	9999999999999
180	081221	de: Blindscheibe weiß für ASN,KSN,ZHN KSN134	0	9999999999999
180	082198	de: Blindscheibe braun für KSN,ASN,ZHN	0	9999999999999
200	066834	Buttom for ZHN,VEP	0	9999999999999
210	066842	Bottom for ZHN,VEP	0	9999999999999
220	080500	Ground tray (498x416x0,9) for ZHN,KSN150/160/200, VestoWIN Premium 200-202, VestoWIN Klassik 170	0	9999999999999
230	003174	Grid iron for ZHN, VestoWIN Premium 200-202	0	9999999999999
240	040800	de: Deckel weiß für ZHN Backrohrseite	0	9999999999999
240	086509	de: Deckel braun für ZHN Backrohrseite	0	9999999999999
250	076880	de: Deckel weiß für KSN 150/160/200,ZHN 212 Kesselseite KSN086	0	9999999999999
250	085375	de: Deckel braun KSN 150/160/200,ZHN 212 für Kesselseite	0	9999999999999
280	004308	Cover hinge for KSN/ZHN, VestoWIN Klassik 170-220, VestoWIN Premium 200-202	0	9999999999999
290	503077	ZHN003 Dekor rotbraun zu ZHN 180/182	0	9999999999999
290	503079	ZHN006 Pearl white ZHN 180/182	0	9999999999999
290	503080	ZHN007 Sahara beige ZHN 180/182	0	9999999999999
290	503081	ZHN008 Brown beige ZHN 180/182	0	9999999999999
290	503083	ZHN010 Dark brown ZHN 180/182	0	9999999999999
300	004928	Glass fibre cord 5/5mm for FireWIN, ZHN, VestoWIN Premium 200-202	0	9999999999999
340	041693	Throttle flap for KSN210/250,ZHN18/21,VestoWIN Klassik 220	0	9999999999999
350	004030	Combustion controlling mechanism for KSN,ZHN,FKV,VestoWIN Klassik 170-220, VestoWIN Premium 200-202	0	9999999999999
360	067148	Heating flap linkage for ZHN162/212, ZHN0364, VestoWIN Premium 202	0	9999999999999
370	081213	Threaded spindle (Ø20x377) for KSN,ZHN,VestoWIN Klassik 170-220, VestoWIN Premium 200-202	0	9999999999999
380	067703	de: Glasscheibe außen für ZHN-Backrohrtüre (543x383mm)	0	9999999999999
390	054003	de: Glasscheibe inkl. Thermometer für Backrohrtüre ZHN und VEP bis 01/2014	0	9999999999999
395	012998	de: HR-Stifte 6X41 gerändelt KSN,ZHN	0	9999999999999
400	004863	Manually operated bleeder VFR 3/8" for ZHN,KSN,GKW,NBE115,GKA/E,VestoWIN Klassik 170-220, VestoWIN Premium 200-202	0	9999999999999
410	080675	Lifting jack for ZHN,KSN160/200/150, VestoWIN Premium 200-202, VestoWIN Klassik 170	0	9999999999999
420	085359	de: Heiztür für KSN 160/200/150,ZHN 212	0	9999999999999
430	088986	de: Blende Heiztür braun KSN150/160/200,ZHN212/182 KSN0141	0	9999999999999
440	004626	Oven hot plate (547x505x7mm) for ZHN162/182/212 ZHN0621, VestoWIN Premium 202	0	9999999999999
440	048172	Hot plate - flue tube top for VestoWIN Premium 202	0	9999999999999

Item no.	Article no.	Description	Serialnumber from	Serialnumber t
450	004081	Boiler hot plate (418x505x7mm) for KSN160/200/150,ZHN18/21, VestoWIN Premium 200-202, VestoWIN Klassik 170	0	9999999999999
460	067598	de: Herdplattenauflage hinten für ZHN	0	9999999999999
470	067644	Hot plate support front for ZHN066, VestoWIN Premium 200-202	0	9999999999999
480	066710	Oven frame for ZHN210/212/180/182/173, VestoWIN Premium 200-202	0	9999999999999
490	050189	de: Holzlade mit Rollen für ZHN, VEP bis SN:104999	0	9999999999999
500	085421	de: Holzladebombe braun für ZHN	0	9999999999999
510	067091	Insolate sheet for ZHN	0	9999999999999
511	075442	Oven cover plate side for VestoWIN Premium 200-202	0	9999999999999
512	075450	de: Isolierblech hinten Backrohr ZHN (405X126X1-1,25)	0	9999999999999
520	060383	de: Isolierung für Backrohrboden für ZHN *ZHN0831	0	9999999999999
530	066818	Insolate rear wall ZHN162/212,VEP202 to lot 4	0	9999999999999
540	066885	Insolate sidewards ZHN162/212,VEP202	0	9999999999999
590	060379	de: Kessel für ZHN 212/182 (Rauchabzug rechts)	0	9999999999999
591	060288	de: Zubehör für Kesseltausch für ZHN	0	9999999999999
595	023949	de: Hutfix SCO 6820 VERZ/GE Klammern Dekor ASN,ZHN,KSN,OEX	0	9999999999999
600	004057	Knob no.30.298-002-001 for ZHN,FKV,VestoWIN Klassik 170-220, VestoWIN Premium 200-202	0	9999999999999
610	012513	Knee no.95T 5/4“ for KSN, VestoWIN Premium 200-202, VestoWIN Klassik 170-220	0	9999999999999
620	023906	Throttle flap button (D10x15) for KSN,ZHN,VestoWIN Klassik 170-220, VestoWIN Premium 200-202	0	9999999999999
625	025925	de: Knopf für Zweitluft D10x10 elox. KSN/ZHN	0	9999999999999
630	056780	Smoke hole cover (Ø=220mm) for ZHN,KSN,KSL,VestoWIN Klassik 170-220	0	9999999999999
640	085332	de: Kohleladerad für Holzlade inkl.Schraube für ZHN,ZH	0	9999999999999
650	047084	Baking tray for ZHL,ZHN,VestoWIN Premium 200-202	0	9999999999999
660	081094	de: Kurbel für Hebevorrichtung für ZHN,KSN KSN192	0	9999999999999
670	085146	Crank for vibration device and grate lifting equipment for KSN,ZHN,VestoWIN Klassik 170-220	0	9999999999999
680	081043	de: Lagerbock für Rüttelachse für KSN,ZHN180/182,210/212	0	9999999999999
685	072362	de: Luftklappe für Feuerungsregler (191x82x0,75) für KSL,ZHL KSL317 ZHN,KSN150/160/200	0	9999999999999
690	075752	Wall support for KSL25,ZHL,KSN250,ZHN18/21,VestoWIN Klassik 220, VestoWIN Premium 200-202	0	9999999999999
700	066961	de: Mittelblende weiß für ZHN 210/212	0	9999999999999
700	067202	de: Mittelblende braun für ZHN 210/212 ZHN225	0	9999999999999
720	066613	de: Reinigungstür für ZHN	0	9999999999999
730	004065	KSN809 Knurled button for ZHN,KSN,VestoWIN Klassik 170-220, VestoWIN Premium 200-202, EasyWIN Klassik/Premium 180	0	9999999999999
740	067296	Flue gas baffle plate for ZHN, VestoWIN Premium 200-202	0	9999999999999
750	085472	Flue outlet with throttle flap for VestoWIN Premium 200-202	0	9999999999999
760	004014	KSN095 241 5/4“-1“ reduction nipple, black for KSN,ZHN,VestoWIN Klassik 170-220, VestoWIN Premium 200-202	0	9999999999999
780	000280	KSL194 Cleaning brush (680x80/57x40) for FKU,ZHN,KSN,ZHL,KS,FKX,VestoWIN Klassik 170-220, VestoWIN Premium 200-202	0	9999999999999
790	072192	Scratcher	0	9999999999999
800	067253	de: Ring für Rohrstutzen weiß für ZHN,KSN250 ZHN054	0	9999999999999
800	067938	de: Ring für Rohrstutzen braun für ZHN,KSN250 ZHN254	0	9999999999999
820	075744	KSL411 Smoke pipe for KSL25,ZHL,ZHN21/18,KSN250,VestoWIN Klassik 220	0	9999999999999
830	080292	KSN019 Grate support complete for ZHN,KSN160/200/150, VestoWIN Premium 200-202, VestoWIN Klassik 170	0	9999999999999
840	066753	Rear wall for ZHN162/212,VestoWIN Premium 202	0	9999999999999
850	080861	de: Rüttelachse (D16x133) KSN,ZHN KSN0051	0	9999999999999
860	004138	de: Rüttelrost (Mod.1-322-261) ZHN18/21,KSN150/200	0	9999999999999
865	008885	Locking pin, black Nr: 00910-000-000 FKN088, HMX,NBL,E/SKX,FKX	0	9999999999999
868	067911	Flue protection plate for ZHN, VestoWIN Premium 200-202	0	9999999999999
870	075183	de: Seitenwand links weiß kpl. KSN,ZHN	0	9999999999999
870	082147	de: Seitenwand links braun KSN/ZHN	0	9999999999999
890	075191	de: Seitenwand rechts weiß kpl. KSN,ZHN	0	9999999999999
890	082163	de: Seitenwand rechts braun KSN,ZHN	0	9999999999999
910	066133	de: Sockel schwarz für ZHN 212	0	9999999999999
920	060558	Nut for lifting equipment rear for ZHN210/212,KSN160/200/150,VestoWIN Klassik 170, VestoWIN Premium 200-202	0	9999999999999

Item no.	Article no.	Description	Serialnumber from	Serialnumber t
930	081485	Nut for lifting equipment front for ZHN210/212,KSN160/200/150,VestoWIN Klassik 170, VestoWIN Premium 200-202	0	9999999999999
935	082015	de: Stehrost für KSN 160/200/150, ZHN	0	9999999999999
940	072222	Poker (D9x750) for KSL,ZHL,ZHN,KSN,VestoWIN Klassik 170-220, VestoWIN Premium 200-202	0	9999999999999
950	004197	KSN094 WAF Plug no.290 5/4" for ZHN,KSN,Vesto WIN Klassik 170-220, VestoWIN Premium 200-202	0	9999999999999
960	005452	OK-915 Immersion sleeve (129 mm) No.55501.04 for EKX,OK/E,GWX,KSN,ZHN,OK-915,ETX,SNX,FKX,MIRA,FireWIN,VestoWIN Klassik 170-220,	0	9999999999999
970	004049	KSN027 Thermometer Z.Nr.SK 2014 IFC 52-052 KRF for ZHN,OEX,KSN,ASN,NBE,VestoWIN Premium 200-202, VestoWIN Klassik 170-220, fitting	0	9999999999999
980	054003	de: Glasscheibe inkl. Thermometer für Backrohrtüre ZHN und VEP bis 01/2014	0	9999999999999
990	010421	KSN100 Thermostat minimal 716 RU-9289 0-95 Grades for FK,GWX,KSN,ZHN,GSX,ETX,SNX,FKX,VestoWIN Klassik 170-220, VestoWIN Premium 20	0	9999999999999
1000	067199	Oven dividing/insulating wall for VestoWIN Premium 200-202	0	9999999999999
1010	067113	Dividing wall top for ZHN162/212,VestoWIN Premium 202	0	9999999999999
1020	067180	Dividing wall between boiler and oven for ZHN, VestoWIN Premium 200-202	0	9999999999999
1030	048063	de: Türscharnier links inkl.Schrauben für Backrohr ZHN	0	9999999999999
1040	048065	de: Türscharnier rechts inkl.Schrauben für Backrohr ZHN	0	9999999999999
1050	061840	KSN022 Door catch for KSN,ZHN,PMX, VestoWIN Premium 200-202, VestoWIN Klassik 170-220	0	9999999999999
1060	004413	KSN099 Union nut no.374 5/4“ for VestoWIN Premium 200-202, VestoWIN Klassik 170-220	0	9999999999999
1070	066397	de: Vorderwand für Backrohr für ZHN 162/212	0	9999999999999
1080	066737	de: Wandabschlußleiste (105x108x1,25) ZHN 212/VEP202	0	9999999999999
1085	066567	KSN9492 Throttle flap shaft for KSN210/250,ZHN18/21,VestoWIN Klassik 170-220, VestoWIN Premium 200-202	0	9999999999999
1090	004006	KSN097 Bracket no.92 3/8“ for ZHN,KSN,VestoWIN Klassik 170-220, VestoWIN Premium 200-202	0	9999999999999

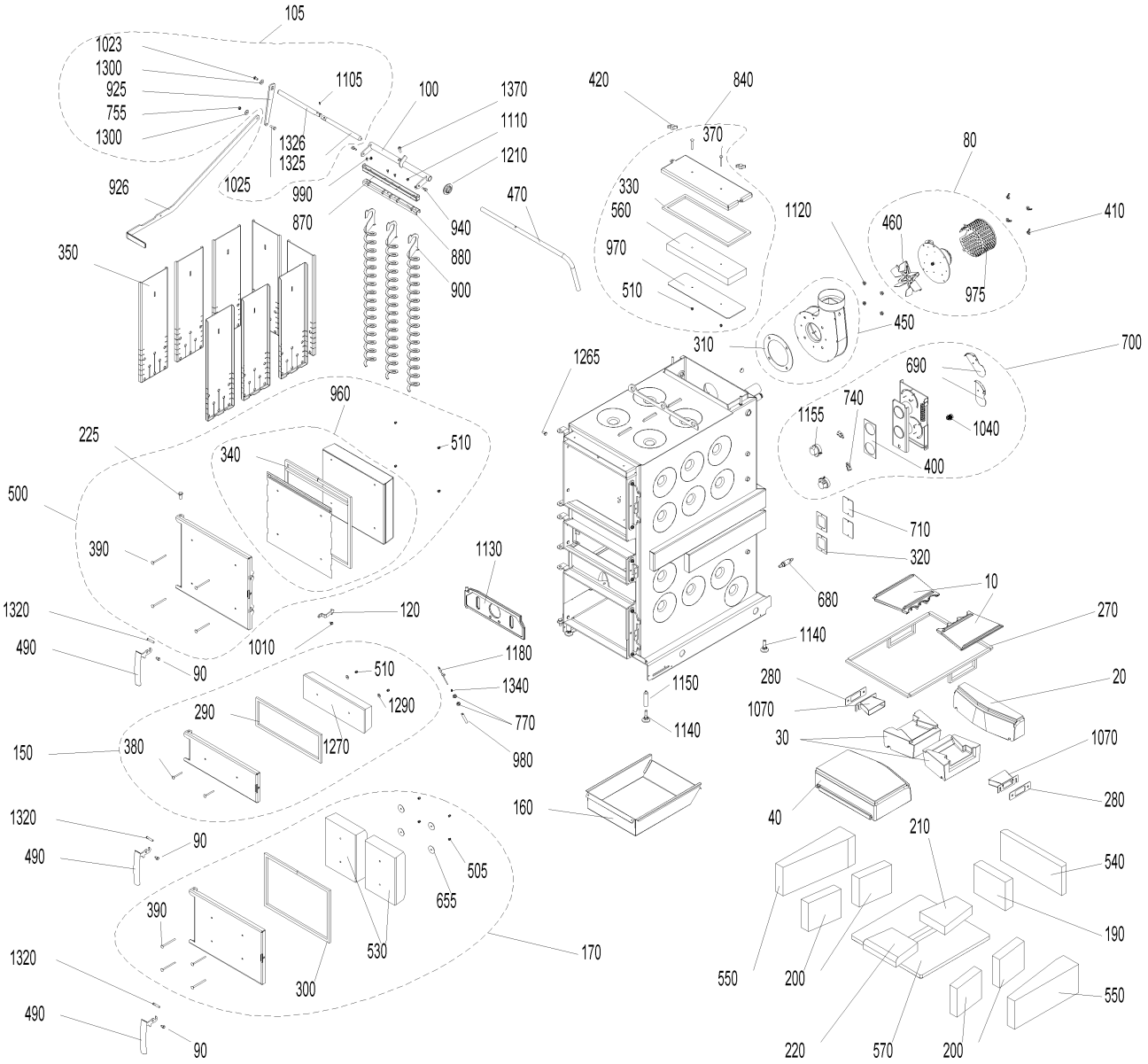
105
1023
1300
925
755
1300
1105
100
1370
1110
1210
1326
1325
1025
926
990
870
940
880
900
470
350
420
840
370
330
560
970
510
1120
80
460
410
975
450
310
1265
700
690
740
1155
1040
400
960
225
340
510
500
390
1130
710
320
680
10
270
1320
120
1010
490
90
1180
1140
510
1340
1150
280
20
1070
290
1290
770
1140
30
1070
150
380
1270
980
160
40
280
1320
90
490
505
655
210
540
390
530
170
190
1320
300
550
200
550
490
90
220
570
200

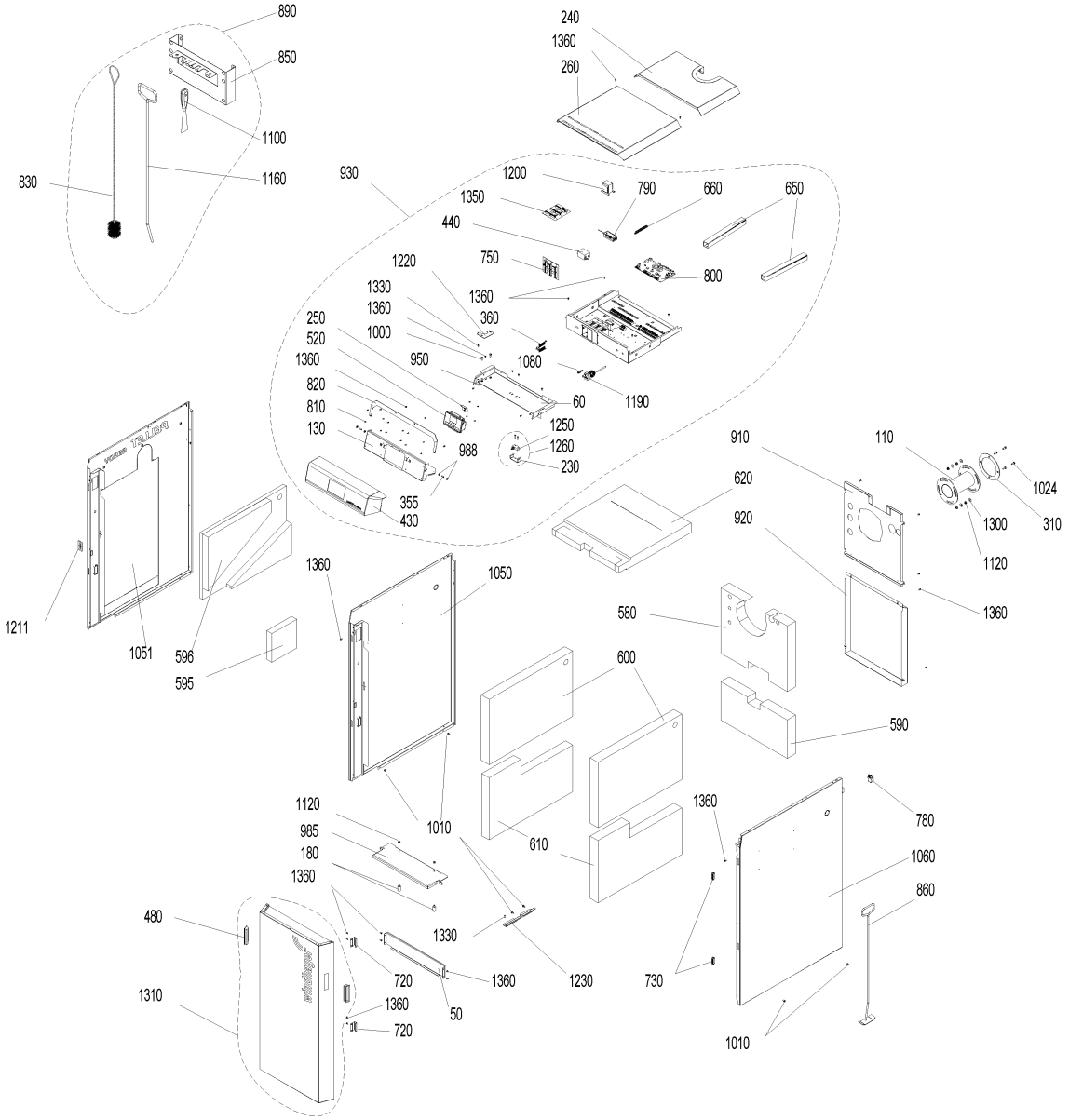
890
850
1100
1160
830
240
1360
260
930
1200
790
660
650
1350
440
750
800
1220
1330
1360
1360
360
250
520
1000
1360
950
1080
820
810
130
60
1190
1250
1260
230
988
355
430
910
110
620
1024
920
1300
310
1120
1360
1211
1051
596
595
1360
1050
580
600
590
1120
985
180
1360
1010
610
1360
780
1060
860
480
1330
1310
720
1360
1230
730
1360
50
720
1010

Item no.	Article no.	Description	Serialnumber from	Serialnumber to
10	007392	Burning plate LWP/LWK	0	99999999999999999
20	007397	Rear burning stone	0	99999999999999999
30	007388	Burning stone left/right LWK/LWP	0	99999999999999999
40	007377	Front burning stone	0	99999999999999999
50	051223	Sensor cover	0	99999999999999999
60	050808	Cover insulation	0	99999999999999999
70	504195	JW-010 Flue gas sensor set with protective pipe	0	99999999999999999
80	051661	Flue gas blower, complete for LWK	0	99999999999999999
90	048881	Axle for door handle CK45	0	99999999999999999
100	046328	Axle for cleaning heating surfaces	0	99999999999999999
105	052463	Axle for cleaning heating surfaces - LogWIN Klassik pellet ready	0	99999999999999999
110	503650	LWKAD1 Adapter for continuously adjustabel flue connection, left or right	0	99999999999999999
120	051244	Safety hook	0	99999999999999999
130	051307	Inside display panel	0	99999999999999999
150	051564	Lighting door, complete	0	99999999999999999
160	045419	Ash pan LWP18-50, LWK	0	99999999999999999
170	051563	Ash door, complete LWK	0	99999999999999999
180	051241	Fastener for carburisation gas duct LWK	0	99999999999999999
190	007383	Rear combustion chamber stone LWP18-30, LWK	0	99999999999999999
200	051233	Combustion chamber stone left/right LWK	0	99999999999999999
210	007384	Bottom rear combustion chamber stone LWP18-30	0	99999999999999999
220	007385	Bottom front combustion chamber stone LWP18-30	0	99999999999999999
225	033104	Door mounting bolt ISO 2341-A - 12x32	0	99999999999999999
230	045820	Door switch clip LWP / LWK	0	99999999999999999
240	051228	Rear cover LWK	0	99999999999999999
250	051297	InfoWIN cover LWK	0	99999999999999999
260	051226	Front cover LWK	0	99999999999999999
270	046119	Rope seal kit for burning stones LWP18-30	0	99999999999999999
280	007391	Seal for secondary air nozzle LWP180-305	0	99999999999999999
290	046267	Lighting door seal LWP18-50, LW	0	99999999999999999
300	046268	Ash door seal LWP18-50, LWK	0	99999999999999999
310	050825	Blower seal LWK	0	99999999999999999
320	009378	Seal for vent cover LWP18-50, LWK	0	99999999999999999
330	051567	Seal for cleaning cover LWK	0	99999999999999999
340	051568	Heating door seal set LWK	0	99999999999999999
350	051569	Hook-in plate LWK	0	99999999999999999
355	051836	Spring-loaded pressure piece M8	0	99999999999999999
360	003726	InfoWIN ribbon cable	0	99999999999999999
370	016178	Round-head screw M6x55	0	99999999999999999
380	016186	Round-head screw M6x60	0	99999999999999999
390	016190	Round-head screw M6x90	0	99999999999999999
400	009305	Flange seal LWP18-50, LWK	0	99999999999999999
410	019410	Wing nut M6	0	99999999999999999
420	007366	Wing nut M8	0	99999999999999999
430	051559	Front control pane LWK	0	99999999999999999
440	007649	Radio interference filter LWP18-50, LWK	0	99999999999999999
450	051577	Blower box, complete LWK	0	99999999999999999
460	053032	Blower wheel	0	99999999999999999
470	045447	Handle for cleaning heating surfaces for LogWIN Premium 180-305	0	99999999999999999
480	051237	Handle recess LWK	0	99999999999999999
490	048811	Boiler handle	0	99999999999999999

Item no.	Article no.	Description	Serialnumber from	Serialnumber to
500	051579	Heating door, complete LWK	0	99999999999999999
505	016192	Cap nut	0	99999999999999999
510	025968	Cap nut M6	0	99999999999999999
520	009879	InfoWIN plus F4 LWK, BioWIN2	0	99999999999999999
530	050585	Insulating stone AT LWK	0	99999999999999999
540	007380	Rear insulating stone for LogWIN Premium 180-305	0	99999999999999999
550	051234	Insulating stone left/right LWK	0	99999999999999999
560	050542	Insulating stone for cleaning cover LWK	0	99999999999999999
570	051236	Bottom insulating stone LWK	0	99999999999999999
580	051217	Top rear insulation LWK	0	99999999999999999
590	051216	Bottom rear insulation LWK	0	99999999999999999
595	007251	Left insulation - LogWIN Klassik pellet ready	0	99999999999999999
596	007250	Top left insulation - LogWIN Klassik pellet ready	0	99999999999999999
600	051214	Top left/right insulation	0	99999999999999999
610	051222	Bottom left/right insulation	0	99999999999999999
620	051215	Top front insulation	0	99999999999999999
630	007165	Lambda sensor cable (not illustrated)	0	99999999999999999
640	048419	Draught fan cable (not illustrated)	0	99999999999999999
650	050837	Cable duct	0	99999999999999999
655	016191	Washer M6 4x40x1,5	0	99999999999999999
660	009928	Terminal bar	0	99999999999999999
680	051646	Lambda sensor	0	99999999999999999
690	040032	Air choke	0	99999999999999999
700	045460	Air control, complete	0	99999999999999999
710	046338	Vent cover	0	99999999999999999
720	051157	Magnet retainer	0	99999999999999999
730	001760	Magnetic lock, black - VW, LWP18-50, LWK	0	99999999999999999
740	009277	Air control microswitch	0	99999999999999999
750	048754	Module connection PCB	0	99999999999999999
755	015992	Nut M8 DIN 934 V2 - LogWIN Klassik pellet ready	0	99999999999999999
770	031156	Hexagon nut M10 DIN 439	0	99999999999999999
780	041430	Mains connection socket 3-pin for MIRA,ETX,PMX,BioWIN10-26,LogWIN Premium 180-505,EasyWIN Premium 180,BioWIN XL 35-60, FireWIN	0	99999999999999999
790	051645	Power supply unit 12V	0	99999999999999999
800	011999	FMF PCB for LogWIN Premium 180-505	0	99999999999999999
810	051308	PT®- oval head screw	0	99999999999999999
820	051301	Pos.plate LWK	0	99999999999999999
830	003088	GWX992 Cleaning brush 950x45mm/45x70 mm for GWX, LogWIN Premium 180-505, EasyWIN Klassik/Premium 180	0	99999999999999999
840	051663	Cleaning cover LWK	0	99999999999999999
850	042743	Holder for cleaning equipments for VarioWIN, LogWIN Premium 180-505,SilvaWIN,BioWIN XL35-60,EasWIN Klassik/Premium 180	0	99999999999999999
860	040328	Cleaning rake for HMX,PMX, EasyWIN Klassik/Premium 180, LogWIN Premium 180-505	0	99999999999999999
870	046325	Top cleaning profile for LogWIN Premium 180-305	0	99999999999999999
880	046323	Bottom cleaning profile for LogWIN Premium 180-305	0	99999999999999999
890	502843	EWK020 Cleaning kit consisting of: cleaning brush, poker, spatula, hanger	0	99999999999999999
900	046322	Cleaning auger for LogWIN Premium 180-505	0	99999999999999999
910	050838	Top rear panel LWK	0	99999999999999999
920	050839	Bottom rear panel LWK	0	99999999999999999
925	052212	Shaker lever	0	99999999999999999
926	052202	Handle for cleaning heating surfaces - LogWIN Klassik pellet ready	0	99999999999999999
930	051134	LWK03 LOGWIN KLASSIK - SWITCH COVER	0	99999999999999999
940	006756	Screw M6 for heating surface cleaning for PMX,BioWIN 10-26,FireWIN, BioWIN XL 35-60, LogWIN Premium 180-505	0	99999999999999999
950	033528	Cylinder screw M 4 x 6 - 8.8	0	99999999999999999

Item no.	Article no.	Description	Serialnumber from	Serialnumber to
960	053240	Heating door protection plate LWK	0	99999999999999999
970	051666	Cleaning cover protection plate LWK	0	99999999999999999
975	010882	Flue gas blower protection hood LWK	0	99999999999999999
980	051231	Thermocontrol sensor protective tube LWK	0	99999999999999999
985	051230	Carborisation gas duct LWK	0	99999999999999999
988	016659	Hexagon nut M8 DIN434	0	99999999999999999
990	031545	Hexagon screw M5x12 DIN 7500 (not ilustrated)	0	99999999999999999
1000	015471	Hexagon screw M6x20 DIN 933	0	99999999999999999
1010	031549	Hexagon screw M6x12 DIN 7500	0	99999999999999999
1020	017882	Thread-rolling hexagon screw DIN 7500 - M8x16 TT - galvanised for VarioWIN, EasyWIN Klassik/Premium 180	0	99999999999999999
1023	016721	Hexagon screw M8x16 DIN 933	0	99999999999999999
1024	017086	Hexagon screw M8x20 DIN 933 (not illustrated)	0	99999999999999999
1025	017191	Hexagon screw M8x25 DIN 933	0	99999999999999999
1030	017046	Cyl. screw M 8X30	0	99999999999999999
1040	017205	Hexagon screws M12x25-8.8	0	99999999999999999
1050	051667	Side wall left LWK	0	99999999999999999
1051	052390	Side wall left LWK Pellet ready	0	99999999999999999
1060	051668	Side wall right LWK	0	99999999999999999
1070	045326	Secondary air nozzle complete for LogWIN Premium 180-305	0	99999999999999999
1075	003228	6.3A fuse (not illustrated)	0	99999999999999999
1080	003663	Fuse holder	0	99999999999999999
1090	016073	WERV013 Silicone seal, black 310ml	0	99999999999999999
1100	009540	Spatula	0	99999999999999999
1105	018184	Clamping pin DIN 1481 - Ø 5x14 for VarioWIN	0	99999999999999999
1110	016566	Hexagon nut with flange and gearing M6	0	99999999999999999
1120	016553	Hexagon nut M8 with flange and gearing	0	99999999999999999
1130	051162	Vertical grate LWK/LWP	0	99999999999999999
1140	009994	Foot M12X40 JTB38 for HMX, EasyWIN Klassik/Premium 180, LogWIN Premium 180-505	0	99999999999999999
1150	007453	Leg extension for LogWIN Premium 180-505, EasyWIN Klassik/Premium 180	0	99999999999999999
1155	040429	Servomotor for HMX, SilvaWIN, LogWIN Premium 180-505	0	99999999999999999
1160	080664	FAX192 Poker for FAX,HMX,SilvaWIN,FKX,EasyWIN Klassik/Premium 180,LogWIN Premium 180-505	0	99999999999999999
1170	009982	Immersion sensor 1,3m LWK	0	99999999999999999
1180	007626	Thermocouple	0	99999999999999999
1190	005672	Thermostat LS1+100-6U	0	99999999999999999
1200	007096	Transformer for O2 sensor 18VA for LogWIN Premium 180-505	0	99999999999999999
1210	048812	Grommet for EasyWIN, LogWIN Premium 180-505	0	99999999999999999
1211	052208	Seal	0	99999999999999999
1220	051220	Top door hinge LWK	0	99999999999999999
1230	050783	Bottom door hinge LWK	0	99999999999999999
1250	007128	Microswitch Z-15GQ-B for LogWIN Premium 180-505, BioWIN XL 35-60	0	99999999999999999
1260	046072	Door switch complete for LogWIN Premium 180-505	0	99999999999999999
1265	051671	Door screw M8	0	99999999999999999
1270	050590	Door stone for lighting door LWK	0	99999999999999999
1290	031753	Disc 6 ISO 7093	0	99999999999999999
1300	031755	Disc 8 ISO 7093	0	99999999999999999
1310	050780	Cladding door, complete	0	99999999999999999
1320	050568	Locking axle LWK	0	99999999999999999
1325	052207	Shaft 1 or cleaning heating surfaces - LogWIN Klassik pellet ready	0	99999999999999999
1326	052211	Shaft 2 or cleaning heating surfaces - LogWIN Klassik pellet ready	0	99999999999999999
1330	015507	Dog point screw	0	99999999999999999
1340	007164	Tension spring	0	99999999999999999

Item no.	Article no.	Description	Serialnumber from	Serialnumber to
1350	007095	Extra PCB for O2-mesure or pumping rotation speed control for BioWIN cascade, LogWIN Premium 180-505	0	99999999999999999
1360	018140	Cylinder screw 4.2x13 DIN7981ST (not illustrated)	0	99999999999999999

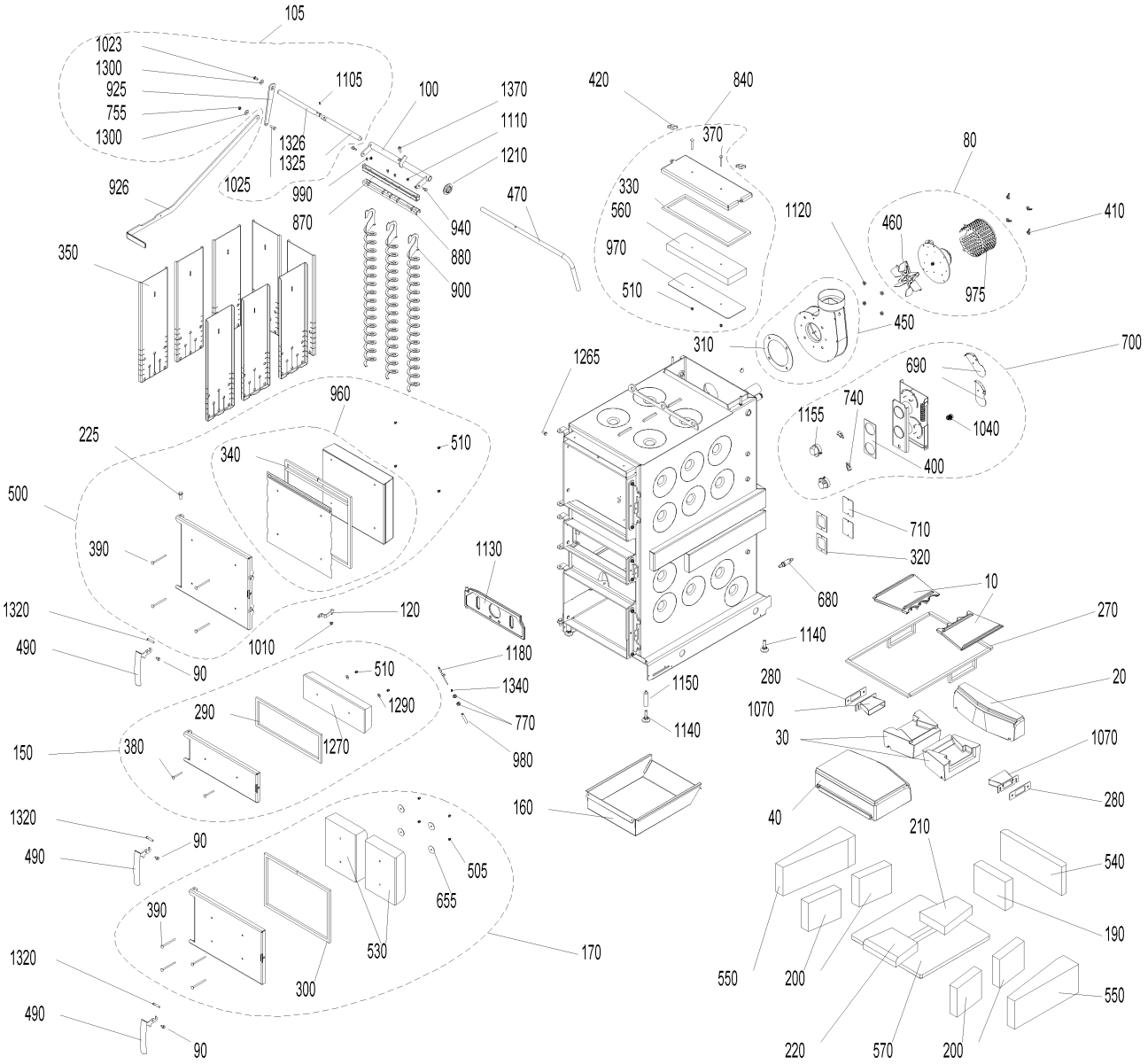
105
1023
1300
925
755
1300
1105
100
1370
1110
1210
1326
1325
1025
926
990
870
940
880
900
470
350
420
840
370
330
560
970
510
1120
80
460
410
975
450
310
1265
700
690
740
1155
1040
400
960
225
340
510
500
390
1130
710
320
680
10
270
1320
120
490
1010
90
1180
1140
510
1340
1150
280
20
1070
290
1290
770
1140
30
1070
150
380
1270
980
160
40
280
1320
90
490
505
655
210
540
390
530
170
190
1320
300
550
200
550
490
90
220
570
200

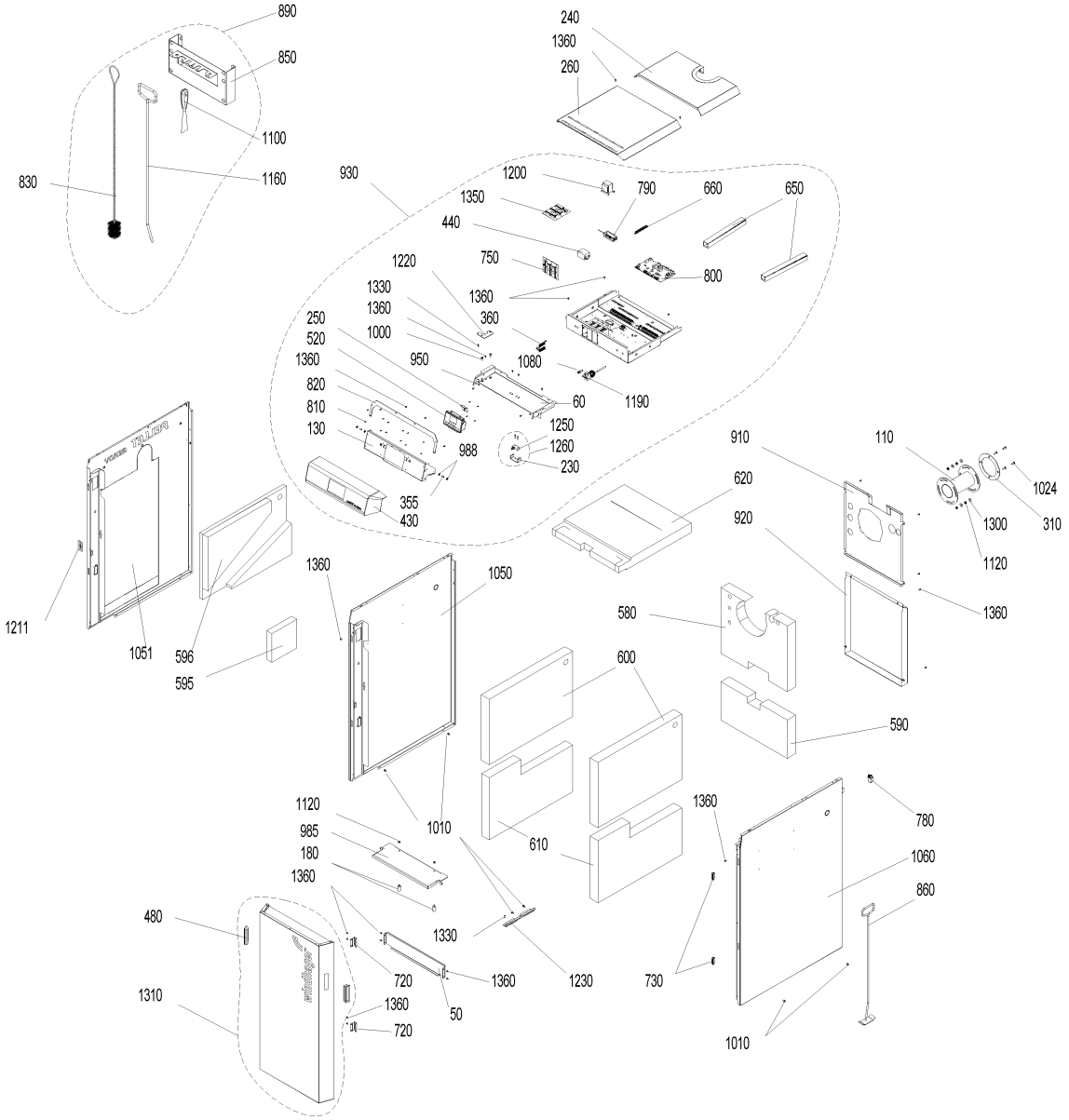
890
850
1100
1160
830
240
1360
260
930
1200
1350
790
660
650
440
750
800
1220
1330
1360
1360
360
250
520
1000
1360
950
1080
820
810
130
60
1190
1250
1260
230
988
355
430
910
110
1024
620
1300
310
920
1120
1360
1211
1051
596
595
1360
1050
580
600
590
1120
985
180
1360
1010
610
1360
780
1060
860
480
1330
720
1360
1230
730
1310
1360
50
720
1010

Item no.	Article no.	Description	Serialnumber from	Serialnumber to
10	007392	Burning plate LWP/LWK	0	99999999999999999
20	007397	Rear burning stone	0	99999999999999999
30	007388	Burning stone left/right LWK/LWP	0	99999999999999999
40	007377	Front burning stone	0	99999999999999999
50	051223	Sensor cover	0	99999999999999999
60	050808	Cover insulation	0	99999999999999999
70	504195	JW-010 Flue gas sensor set with protective pipe	0	99999999999999999
80	051661	Flue gas blower, complete for LWK	0	99999999999999999
90	048881	Axle for door handle CK45	0	99999999999999999
100	046328	Axle for cleaning heating surfaces	0	99999999999999999
105	052463	Axle for cleaning heating surfaces - LogWIN Klassik pellet ready	0	99999999999999999
110	503650	LWKAD1 Adapter for continuously adjustabel flue connection, left or right	0	99999999999999999
120	051244	Safety hook	0	99999999999999999
130	051307	Inside display panel	0	99999999999999999
150	051564	Lighting door, complete	0	99999999999999999
160	045419	Ash pan LWP18-50, LWK	0	99999999999999999
170	051563	Ash door, complete LWK	0	99999999999999999
180	051241	Fastener for carburisation gas duct LWK	0	99999999999999999
190	007383	Rear combustion chamber stone LWP18-30, LWK	0	99999999999999999
200	051233	Combustion chamber stone left/right LWK	0	99999999999999999
210	007384	Bottom rear combustion chamber stone LWP18-30	0	99999999999999999
220	007385	Bottom front combustion chamber stone LWP18-30	0	99999999999999999
225	033104	Door mounting bolt ISO 2341-A - 12x32	0	99999999999999999
230	045820	Door switch clip LWP / LWK	0	99999999999999999
240	051228	Rear cover LWK	0	99999999999999999
250	051297	InfoWIN cover LWK	0	99999999999999999
260	051226	Front cover LWK	0	99999999999999999
270	046119	Rope seal kit for burning stones LWP18-30	0	99999999999999999
280	007391	Seal for secondary air nozzle LWP180-305	0	99999999999999999
290	046267	Lighting door seal LWP18-50, LW	0	99999999999999999
300	046268	Ash door seal LWP18-50, LWK	0	99999999999999999
310	050825	Blower seal LWK	0	99999999999999999
320	009378	Seal for vent cover LWP18-50, LWK	0	99999999999999999
330	051567	Seal for cleaning cover LWK	0	99999999999999999
340	051568	Heating door seal set LWK	0	99999999999999999
350	051569	Hook-in plate LWK	0	99999999999999999
355	051836	Spring-loaded pressure piece M8	0	99999999999999999
360	003726	InfoWIN ribbon cable	0	99999999999999999
370	016178	Round-head screw M6x55	0	99999999999999999
380	016186	Round-head screw M6x60	0	99999999999999999
390	016190	Round-head screw M6x90	0	99999999999999999
400	009305	Flange seal LWP18-50, LWK	0	99999999999999999
410	019410	Wing nut M6	0	99999999999999999
420	007366	Wing nut M8	0	99999999999999999
430	051559	Front control pane LWK	0	99999999999999999
440	007649	Radio interference filter LWP18-50, LWK	0	99999999999999999
450	051577	Blower box, complete LWK	0	99999999999999999
460	053032	Blower wheel	0	99999999999999999
470	045447	Handle for cleaning heating surfaces for LogWIN Premium 180-305	0	99999999999999999
480	051237	Handle recess LWK	0	99999999999999999
490	048811	Boiler handle	0	99999999999999999

Item no.	Article no.	Description	Serialnumber from	Serialnumber to
500	051579	Heating door, complete LWK	0	99999999999999999
505	016192	Cap nut	0	99999999999999999
510	025968	Cap nut M6	0	99999999999999999
520	009879	InfoWIN plus F4 LWK, BioWIN2	0	99999999999999999
530	050585	Insulating stone AT LWK	0	99999999999999999
540	007380	Rear insulating stone for LogWIN Premium 180-305	0	99999999999999999
550	051234	Insulating stone left/right LWK	0	99999999999999999
560	050542	Insulating stone for cleaning cover LWK	0	99999999999999999
570	051236	Bottom insulating stone LWK	0	99999999999999999
580	051217	Top rear insulation LWK	0	99999999999999999
590	051216	Bottom rear insulation LWK	0	99999999999999999
595	007251	Left insulation - LogWIN Klassik pellet ready	0	99999999999999999
596	007250	Top left insulation - LogWIN Klassik pellet ready	0	99999999999999999
600	051214	Top left/right insulation	0	99999999999999999
610	051222	Bottom left/right insulation	0	99999999999999999
620	051215	Top front insulation	0	99999999999999999
630	007165	Lambda sensor cable (not illustrated)	0	99999999999999999
640	048419	Draught fan cable (not illustrated)	0	99999999999999999
650	050837	Cable duct	0	99999999999999999
655	016191	Washer M6 4x40x1,5	0	99999999999999999
660	009928	Terminal bar	0	99999999999999999
680	051646	Lambda sensor	0	99999999999999999
690	040032	Air choke	0	99999999999999999
700	045460	Air control, complete	0	99999999999999999
710	046338	Vent cover	0	99999999999999999
720	051157	Magnet retainer	0	99999999999999999
730	001760	Magnetic lock, black - VW, LWP18-50, LWK	0	99999999999999999
740	009277	Air control microswitch	0	99999999999999999
750	048754	Module connection PCB	0	99999999999999999
755	015992	Nut M8 DIN 934 V2 - LogWIN Klassik pellet ready	0	99999999999999999
770	031156	Hexagon nut M10 DIN 439	0	99999999999999999
780	041430	Mains connection socket 3-pin for MIRA,ETX,PMX,BioWIN10-26,LogWIN Premium 180-505,EasyWIN Premium 180,BioWIN XL 35-60, FireWIN	0	99999999999999999
790	051645	Power supply unit 12V	0	99999999999999999
800	011999	FMF PCB for LogWIN Premium 180-505	0	99999999999999999
810	051308	PT®- oval head screw	0	99999999999999999
820	051301	Pos.plate LWK	0	99999999999999999
830	003088	GWX992 Cleaning brush 950x45mm/45x70 mm for GWX, LogWIN Premium 180-505, EasyWIN Klassik/Premium 180	0	99999999999999999
840	051663	Cleaning cover LWK	0	99999999999999999
850	042743	Holder for cleaning equipments for VarioWIN, LogWIN Premium 180-505,SilvaWIN,BioWIN XL35-60,EasWIN Klassik/Premium 180	0	99999999999999999
860	040328	Cleaning rake for HMX,PMX, EasyWIN Klassik/Premium 180, LogWIN Premium 180-505	0	99999999999999999
870	046325	Top cleaning profile for LogWIN Premium 180-305	0	99999999999999999
880	046323	Bottom cleaning profile for LogWIN Premium 180-305	0	99999999999999999
890	502843	EWK020 Cleaning kit consisting of: cleaning brush, poker, spatula, hanger	0	99999999999999999
900	046322	Cleaning auger for LogWIN Premium 180-505	0	99999999999999999
910	050838	Top rear panel LWK	0	99999999999999999
920	050839	Bottom rear panel LWK	0	99999999999999999
925	052212	Shaker lever	0	99999999999999999
926	052202	Handle for cleaning heating surfaces - LogWIN Klassik pellet ready	0	99999999999999999
930	051134	LWK03 LOGWIN KLASSIK - SWITCH COVER	0	99999999999999999
940	006756	Screw M6 for heating surface cleaning for PMX,BioWIN 10-26,FireWIN, BioWIN XL 35-60, LogWIN Premium 180-505	0	99999999999999999
950	033528	Cylinder screw M 4 x 6 - 8.8	0	99999999999999999

Item no.	Article no.	Description	Serialnumber from	Serialnumber to
960	053240	Heating door protection plate LWK	0	99999999999999999
970	051666	Cleaning cover protection plate LWK	0	99999999999999999
975	010882	Flue gas blower protection hood LWK	0	99999999999999999
980	051231	Thermocontrol sensor protective tube LWK	0	99999999999999999
985	051230	Carborisation gas duct LWK	0	99999999999999999
988	016659	Hexagon nut M8 DIN434	0	99999999999999999
990	031545	Hexagon screw M5x12 DIN 7500 (not ilustrated)	0	99999999999999999
1000	015471	Hexagon screw M6x20 DIN 933	0	99999999999999999
1010	031549	Hexagon screw M6x12 DIN 7500	0	99999999999999999
1020	017882	Thread-rolling hexagon screw DIN 7500 - M8x16 TT - galvanised for VarioWIN, EasyWIN Klassik/Premium 180	0	99999999999999999
1023	016721	Hexagon screw M8x16 DIN 933	0	99999999999999999
1024	017086	Hexagon screw M8x20 DIN 933 (not illustrated)	0	99999999999999999
1025	017191	Hexagon screw M8x25 DIN 933	0	99999999999999999
1030	017046	Cyl. screw M 8X30	0	99999999999999999
1040	017205	Hexagon screws M12x25-8.8	0	99999999999999999
1050	051667	Side wall left LWK	0	99999999999999999
1051	052390	Side wall left LWK Pellet ready	0	99999999999999999
1060	051668	Side wall right LWK	0	99999999999999999
1070	045326	Secondary air nozzle complete for LogWIN Premium 180-305	0	99999999999999999
1075	003228	6.3A fuse (not illustrated)	0	99999999999999999
1080	003663	Fuse holder	0	99999999999999999
1090	016073	WERV013 Silicone seal, black 310ml	0	99999999999999999
1100	009540	Spatula	0	99999999999999999
1105	018184	Clamping pin DIN 1481 - Ø 5x14 for VarioWIN	0	99999999999999999
1110	016566	Hexagon nut with flange and gearing M6	0	99999999999999999
1120	016553	Hexagon nut M8 with flange and gearing	0	99999999999999999
1130	051162	Vertical grate LWK/LWP	0	99999999999999999
1140	009994	Foot M12X40 JTB38 for HMX, EasyWIN Klassik/Premium 180, LogWIN Premium 180-505	0	99999999999999999
1150	007453	Leg extension for LogWIN Premium 180-505, EasyWIN Klassik/Premium 180	0	99999999999999999
1155	040429	Servomotor for HMX, SilvaWIN, LogWIN Premium 180-505	0	99999999999999999
1160	080664	FAX192 Poker for FAX,HMX,SilvaWIN,FKX,EasyWIN Klassik/Premium 180,LogWIN Premium 180-505	0	99999999999999999
1170	009982	Immersion sensor 1,3m LWK	0	99999999999999999
1180	007626	Thermocouple	0	99999999999999999
1190	005672	Thermostat LS1+100-6U	0	99999999999999999
1200	007096	Transformer for O2 sensor 18VA for LogWIN Premium 180-505	0	99999999999999999
1210	048812	Grommet for EasyWIN, LogWIN Premium 180-505	0	99999999999999999
1211	052208	Seal	0	99999999999999999
1220	051220	Top door hinge LWK	0	99999999999999999
1230	050783	Bottom door hinge LWK	0	99999999999999999
1250	007128	Microswitch Z-15GQ-B for LogWIN Premium 180-505, BioWIN XL 35-60	0	99999999999999999
1260	046072	Door switch complete for LogWIN Premium 180-505	0	99999999999999999
1265	051671	Door screw M8	0	99999999999999999
1270	050590	Door stone for lighting door LWK	0	99999999999999999
1290	031753	Disc 6 ISO 7093	0	99999999999999999
1300	031755	Disc 8 ISO 7093	0	99999999999999999
1310	050780	Cladding door, complete	0	99999999999999999
1320	050568	Locking axle LWK	0	99999999999999999
1325	052207	Shaft 1 or cleaning heating surfaces - LogWIN Klassik pellet ready	0	99999999999999999
1326	052211	Shaft 2 or cleaning heating surfaces - LogWIN Klassik pellet ready	0	99999999999999999
1330	015507	Dog point screw	0	99999999999999999
1340	007164	Tension spring	0	99999999999999999

Item no.	Article no.	Description	Serialnumber from	Serialnumber to
1350	007095	Extra PCB for O2-mesure or pumping rotation speed control for BioWIN cascade, LogWIN Premium 180-505	0	99999999999999999
1360	018140	Cylinder screw 4.2x13 DIN7981ST (not illustrated)	0	99999999999999999

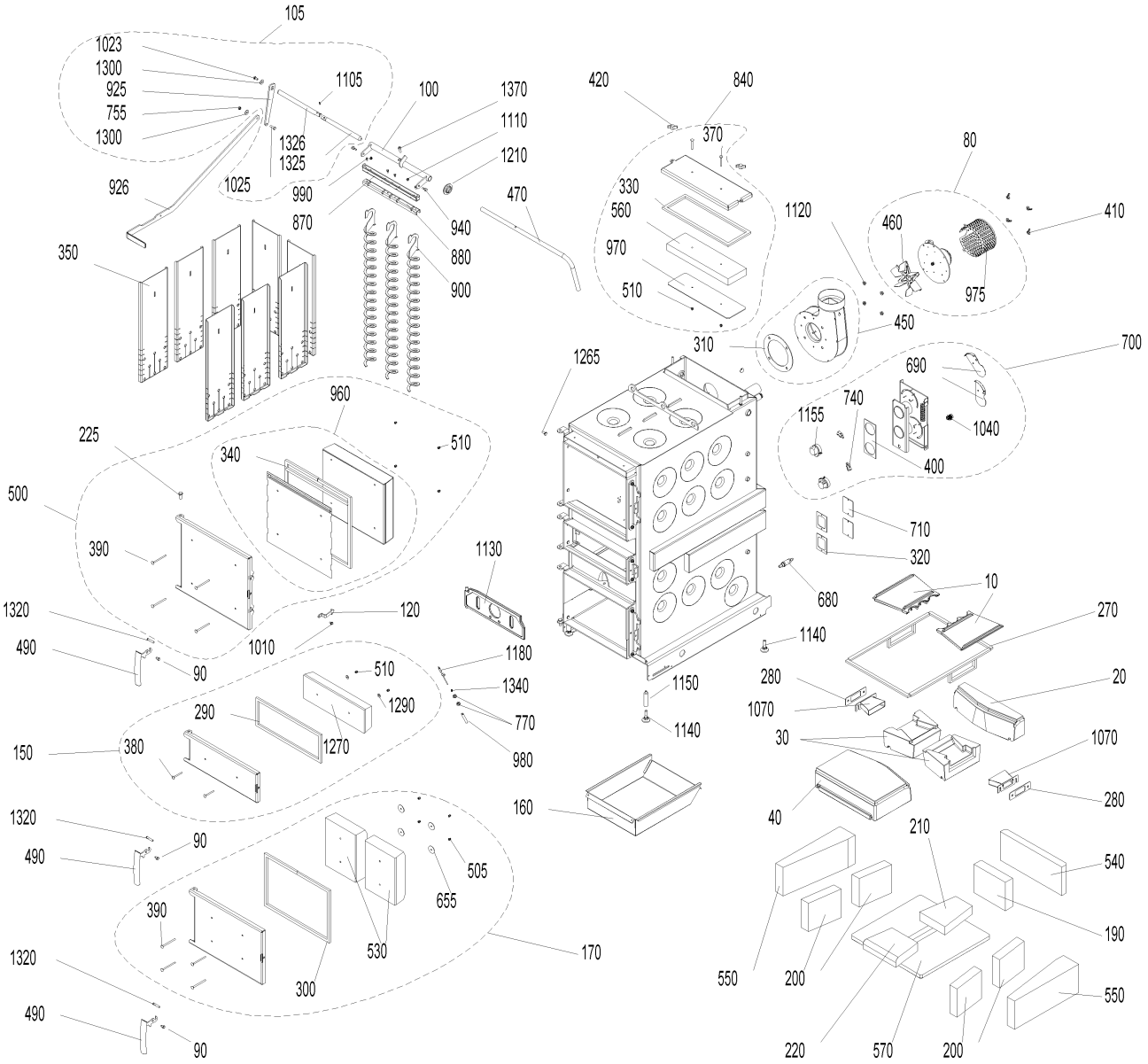
105
1023
1300
925
755
1300
1105
100
1370
1110
1210
1326
1325
1025
926
990
870
940
880
900
470
350
420
840
370
330
560
970
510
1120
80
460
410
975
450
310
700
690
740
1155
1040
400
1265
960
225
340
510
500
390
1130
710
320
680
10
270
1320
120
1010
490
90
1180
1140
510
1340
1150
280
20
1070
290
1290
770
1140
30
1070
150
380
1270
980
160
40
280
1320
90
490
505
655
210
540
390
530
170
190
1320
300
550
200
550
490
90
220
570
200

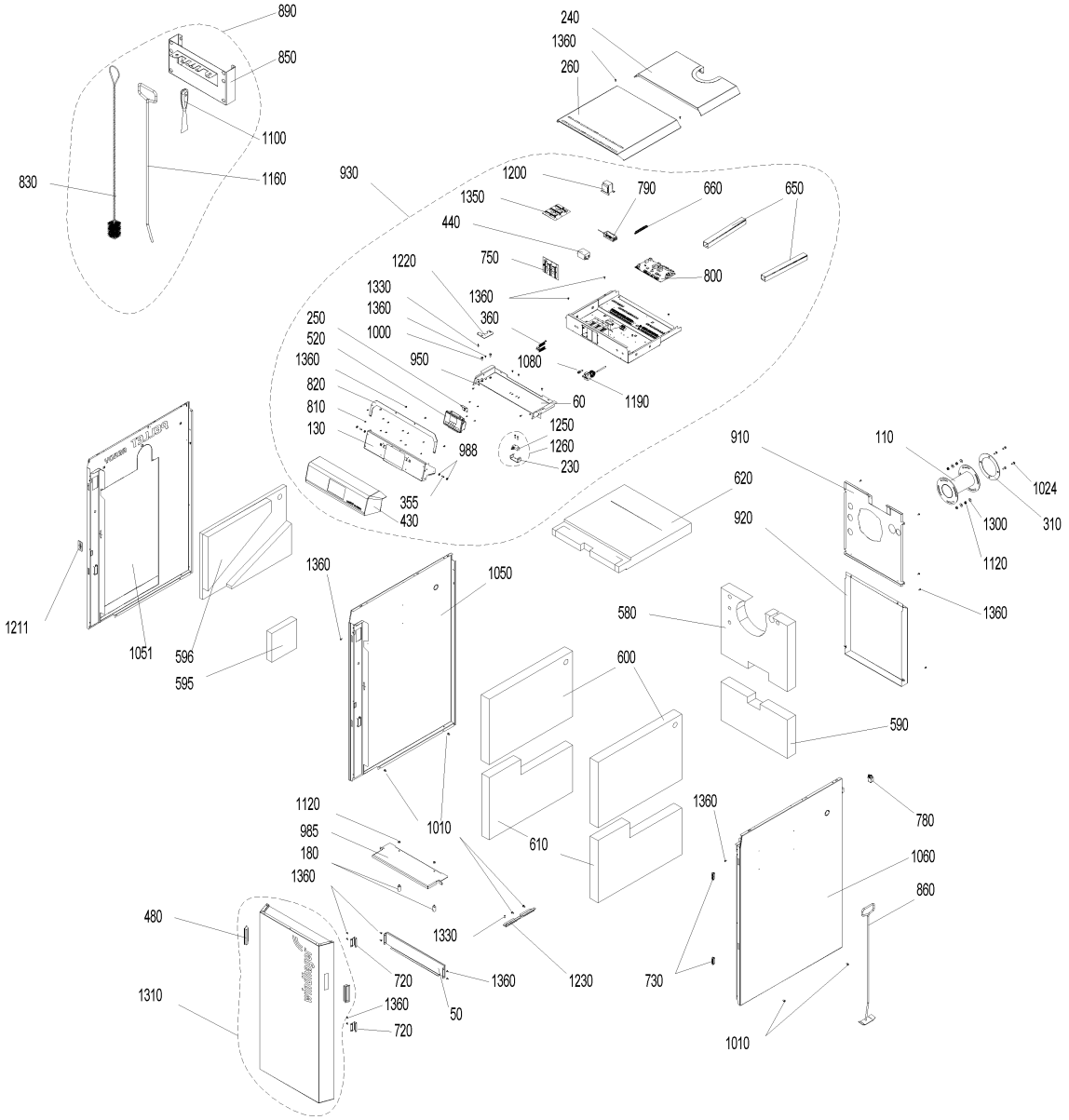
890
850
1100
1160
830
240
1360
260
930
1200
1350
790
660
650
440
750
800
1220
1330
1360
1360
360
250
520
1000
1360
950
1080
820
810
130
60
1190
1250
1260
230
988
355
430
910
110
1024
620
1300
310
920
1120
1360
1211
1051
596
595
1360
1050
580
600
590
1120
985
180
1360
1010
610
1360
780
1060
860
480
1330
720
1360
1230
730
1310
1360
50
720
1010

Item no.	Article no.	Description	Serialnumber from	Serialnumber to
10	007392	Burning plate LWP/LWK	0	99999999999999999
20	007397	Rear burning stone	0	99999999999999999
30	007388	Burning stone left/right LWK/LWP	0	99999999999999999
40	007377	Front burning stone	0	99999999999999999
50	051223	Sensor cover	0	99999999999999999
60	050808	Cover insulation	0	99999999999999999
70	504195	JW-010 Flue gas sensor set with protective pipe	0	99999999999999999
80	051661	Flue gas blower, complete for LWK	0	99999999999999999
90	048881	Axle for door handle CK45	0	99999999999999999
100	046328	Axle for cleaning heating surfaces	0	99999999999999999
105	052463	Axle for cleaning heating surfaces - LogWIN Klassik pellet ready	0	99999999999999999
110	503650	LWKAD1 Adapter for continuously adjustabel flue connection, left or right	0	99999999999999999
120	051244	Safety hook	0	99999999999999999
130	051307	Inside display panel	0	99999999999999999
150	051564	Lighting door, complete	0	99999999999999999
160	045419	Ash pan LWP18-50, LWK	0	99999999999999999
170	051563	Ash door, complete LWK	0	99999999999999999
180	051241	Fastener for carburisation gas duct LWK	0	99999999999999999
190	007383	Rear combustion chamber stone LWP18-30, LWK	0	99999999999999999
200	051233	Combustion chamber stone left/right LWK	0	99999999999999999
210	007384	Bottom rear combustion chamber stone LWP18-30	0	99999999999999999
220	007385	Bottom front combustion chamber stone LWP18-30	0	99999999999999999
225	033104	Door mounting bolt ISO 2341-A - 12x32	0	99999999999999999
230	045820	Door switch clip LWP / LWK	0	99999999999999999
240	051228	Rear cover LWK	0	99999999999999999
250	051297	InfoWIN cover LWK	0	99999999999999999
260	051226	Front cover LWK	0	99999999999999999
270	046119	Rope seal kit for burning stones LWP18-30	0	99999999999999999
280	007391	Seal for secondary air nozzle LWP180-305	0	99999999999999999
290	046267	Lighting door seal LWP18-50, LW	0	99999999999999999
300	046268	Ash door seal LWP18-50, LWK	0	99999999999999999
310	050825	Blower seal LWK	0	99999999999999999
320	009378	Seal for vent cover LWP18-50, LWK	0	99999999999999999
330	051567	Seal for cleaning cover LWK	0	99999999999999999
340	051568	Heating door seal set LWK	0	99999999999999999
350	051569	Hook-in plate LWK	0	99999999999999999
355	051836	Spring-loaded pressure piece M8	0	99999999999999999
360	003726	InfoWIN ribbon cable	0	99999999999999999
370	016178	Round-head screw M6x55	0	99999999999999999
380	016186	Round-head screw M6x60	0	99999999999999999
390	016190	Round-head screw M6x90	0	99999999999999999
400	009305	Flange seal LWP18-50, LWK	0	99999999999999999
410	019410	Wing nut M6	0	99999999999999999
420	007366	Wing nut M8	0	99999999999999999
430	051559	Front control pane LWK	0	99999999999999999
440	007649	Radio interference filter LWP18-50, LWK	0	99999999999999999
450	051577	Blower box, complete LWK	0	99999999999999999
460	053032	Blower wheel	0	99999999999999999
470	045447	Handle for cleaning heating surfaces for LogWIN Premium 180-305	0	99999999999999999
480	051237	Handle recess LWK	0	99999999999999999
490	048811	Boiler handle	0	99999999999999999

Item no.	Article no.	Description	Serialnumber from	Serialnumber to
500	051579	Heating door, complete LWK	0	99999999999999999
505	016192	Cap nut	0	99999999999999999
510	025968	Cap nut M6	0	99999999999999999
520	009879	InfoWIN plus F4 LWK, BioWIN2	0	99999999999999999
530	050585	Insulating stone AT LWK	0	99999999999999999
540	007380	Rear insulating stone for LogWIN Premium 180-305	0	99999999999999999
550	051234	Insulating stone left/right LWK	0	99999999999999999
560	050542	Insulating stone for cleaning cover LWK	0	99999999999999999
570	051236	Bottom insulating stone LWK	0	99999999999999999
580	051217	Top rear insulation LWK	0	99999999999999999
590	051216	Bottom rear insulation LWK	0	99999999999999999
595	007251	Left insulation - LogWIN Klassik pellet ready	0	99999999999999999
596	007250	Top left insulation - LogWIN Klassik pellet ready	0	99999999999999999
600	051214	Top left/right insulation	0	99999999999999999
610	051222	Bottom left/right insulation	0	99999999999999999
620	051215	Top front insulation	0	99999999999999999
630	007165	Lambda sensor cable (not illustrated)	0	99999999999999999
640	048419	Draught fan cable (not illustrated)	0	99999999999999999
650	050837	Cable duct	0	99999999999999999
655	016191	Washer M6 4x40x1,5	0	99999999999999999
660	009928	Terminal bar	0	99999999999999999
680	051646	Lambda sensor	0	99999999999999999
690	040032	Air choke	0	99999999999999999
700	045460	Air control, complete	0	99999999999999999
710	046338	Vent cover	0	99999999999999999
720	051157	Magnet retainer	0	99999999999999999
730	001760	Magnetic lock, black - VW, LWP18-50, LWK	0	99999999999999999
740	009277	Air control microswitch	0	99999999999999999
750	048754	Module connection PCB	0	99999999999999999
755	015992	Nut M8 DIN 934 V2 - LogWIN Klassik pellet ready	0	99999999999999999
770	031156	Hexagon nut M10 DIN 439	0	99999999999999999
780	041430	Mains connection socket 3-pin for MIRA,ETX,PMX,BioWIN10-26,LogWIN Premium 180-505,EasyWIN Premium 180,BioWIN XL 35-60, FireWIN	0	99999999999999999
790	051645	Power supply unit 12V	0	99999999999999999
800	011999	FMF PCB for LogWIN Premium 180-505	0	99999999999999999
810	051308	PT®- oval head screw	0	99999999999999999
820	051301	Pos.plate LWK	0	99999999999999999
830	003088	GWX992 Cleaning brush 950x45mm/45x70 mm for GWX, LogWIN Premium 180-505, EasyWIN Klassik/Premium 180	0	99999999999999999
840	051663	Cleaning cover LWK	0	99999999999999999
850	042743	Holder for cleaning equipments for VarioWIN, LogWIN Premium 180-505,SilvaWIN,BioWIN XL35-60,EasWIN Klassik/Premium 180	0	99999999999999999
860	040328	Cleaning rake for HMX,PMX, EasyWIN Klassik/Premium 180, LogWIN Premium 180-505	0	99999999999999999
870	046325	Top cleaning profile for LogWIN Premium 180-305	0	99999999999999999
880	046323	Bottom cleaning profile for LogWIN Premium 180-305	0	99999999999999999
890	502843	EWK020 Cleaning kit consisting of: cleaning brush, poker, spatula, hanger	0	99999999999999999
900	046322	Cleaning auger for LogWIN Premium 180-505	0	99999999999999999
910	050838	Top rear panel LWK	0	99999999999999999
920	050839	Bottom rear panel LWK	0	99999999999999999
925	052212	Shaker lever	0	99999999999999999
926	052202	Handle for cleaning heating surfaces - LogWIN Klassik pellet ready	0	99999999999999999
930	051134	LWK03 LOGWIN KLASSIK - SWITCH COVER	0	99999999999999999
940	006756	Screw M6 for heating surface cleaning for PMX,BioWIN 10-26,FireWIN, BioWIN XL 35-60, LogWIN Premium 180-505	0	99999999999999999
950	033528	Cylinder screw M 4 x 6 - 8.8	0	99999999999999999

Item no.	Article no.	Description	Serialnumber from	Serialnumber to
960	053240	Heating door protection plate LWK	0	99999999999999999
970	051666	Cleaning cover protection plate LWK	0	99999999999999999
975	010882	Flue gas blower protection hood LWK	0	99999999999999999
980	051231	Thermocontrol sensor protective tube LWK	0	99999999999999999
985	051230	Carborisation gas duct LWK	0	99999999999999999
988	016659	Hexagon nut M8 DIN434	0	99999999999999999
990	031545	Hexagon screw M5x12 DIN 7500 (not ilustrated)	0	99999999999999999
1000	015471	Hexagon screw M6x20 DIN 933	0	99999999999999999
1010	031549	Hexagon screw M6x12 DIN 7500	0	99999999999999999
1020	017882	Thread-rolling hexagon screw DIN 7500 - M8x16 TT - galvanised for VarioWIN, EasyWIN Klassik/Premium 180	0	99999999999999999
1023	016721	Hexagon screw M8x16 DIN 933	0	99999999999999999
1024	017086	Hexagon screw M8x20 DIN 933 (not illustrated)	0	99999999999999999
1025	017191	Hexagon screw M8x25 DIN 933	0	99999999999999999
1030	017046	Cyl. screw M 8X30	0	99999999999999999
1040	017205	Hexagon screws M12x25-8.8	0	99999999999999999
1050	051667	Side wall left LWK	0	99999999999999999
1051	052390	Side wall left LWK Pellet ready	0	99999999999999999
1060	051668	Side wall right LWK	0	99999999999999999
1070	045326	Secondary air nozzle complete for LogWIN Premium 180-305	0	99999999999999999
1075	003228	6.3A fuse (not illustrated)	0	99999999999999999
1080	003663	Fuse holder	0	99999999999999999
1090	016073	WERV013 Silicone seal, black 310ml	0	99999999999999999
1100	009540	Spatula	0	99999999999999999
1105	018184	Clamping pin DIN 1481 - Ø 5x14 for VarioWIN	0	99999999999999999
1110	016566	Hexagon nut with flange and gearing M6	0	99999999999999999
1120	016553	Hexagon nut M8 with flange and gearing	0	99999999999999999
1130	051162	Vertical grate LWK/LWP	0	99999999999999999
1140	009994	Foot M12X40 JTB38 for HMX, EasyWIN Klassik/Premium 180, LogWIN Premium 180-505	0	99999999999999999
1150	007453	Leg extension for LogWIN Premium 180-505, EasyWIN Klassik/Premium 180	0	99999999999999999
1155	040429	Servomotor for HMX, SilvaWIN, LogWIN Premium 180-505	0	99999999999999999
1160	080664	FAX192 Poker for FAX,HMX,SilvaWIN,FKX,EasyWIN Klassik/Premium 180,LogWIN Premium 180-505	0	99999999999999999
1170	009982	Immersion sensor 1,3m LWK	0	99999999999999999
1180	007626	Thermocouple	0	99999999999999999
1190	005672	Thermostat LS1+100-6U	0	99999999999999999
1200	007096	Transformer for O2 sensor 18VA for LogWIN Premium 180-505	0	99999999999999999
1210	048812	Grommet for EasyWIN, LogWIN Premium 180-505	0	99999999999999999
1211	052208	Seal	0	99999999999999999
1220	051220	Top door hinge LWK	0	99999999999999999
1230	050783	Bottom door hinge LWK	0	99999999999999999
1250	007128	Microswitch Z-15GQ-B for LogWIN Premium 180-505, BioWIN XL 35-60	0	99999999999999999
1260	046072	Door switch complete for LogWIN Premium 180-505	0	99999999999999999
1265	051671	Door screw M8	0	99999999999999999
1270	050590	Door stone for lighting door LWK	0	99999999999999999
1290	031753	Disc 6 ISO 7093	0	99999999999999999
1300	031755	Disc 8 ISO 7093	0	99999999999999999
1310	050780	Cladding door, complete	0	99999999999999999
1320	050568	Locking axle LWK	0	99999999999999999
1325	052207	Shaft 1 or cleaning heating surfaces - LogWIN Klassik pellet ready	0	99999999999999999
1326	052211	Shaft 2 or cleaning heating surfaces - LogWIN Klassik pellet ready	0	99999999999999999
1330	015507	Dog point screw	0	99999999999999999
1340	007164	Tension spring	0	99999999999999999

Item no.	Article no.	Description	Serialnumber from	Serialnumber to
1350	007095	Extra PCB for O2-mesure or pumping rotation speed control for BioWIN cascade, LogWIN Premium 180-505	0	99999999999999999
1360	018140	Cylinder screw 4.2x13 DIN7981ST (not illustrated)	0	99999999999999999

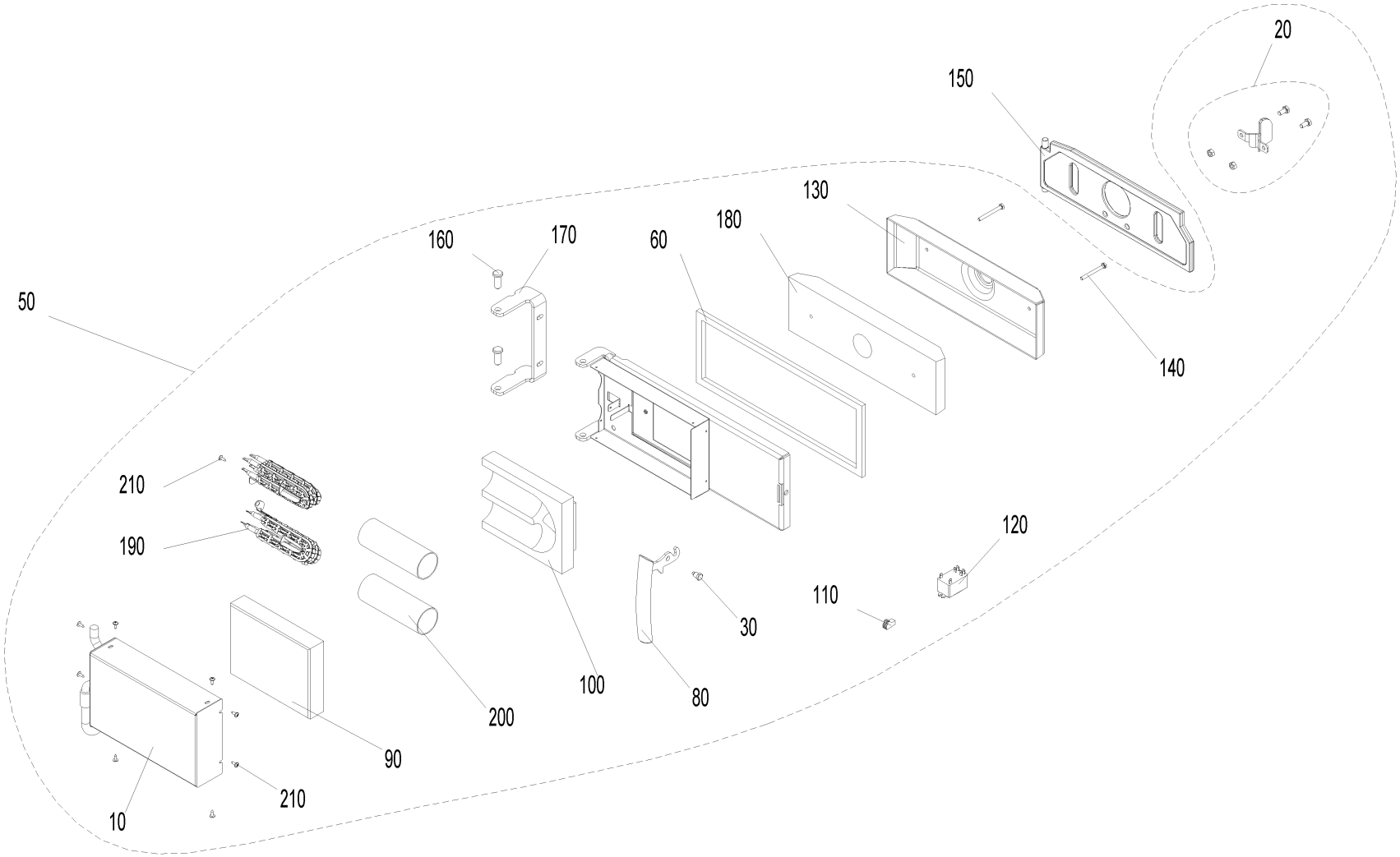
20
150
130
180
160
170
60
50
140
210
190
120
110
30
100
80
200
90
210
10

Item no.	Article no.	Description	Serialnumber from	Serialnumber to
10	048412	Cover for ignition LWP18-50	0	99999999999999999
20	050597	Fender cpl. for ignition LWP18-50, LWK	0	99999999999999999
30	048881	Axle for door handle CK45	0	99999999999999999
40	051840	Cable - Ignition element LWK	0	99999999999999999
50	051248	Automatic ignition LWK 180-300	0	99999999999999999
60	046267	Lighting door seal LWP18-50, LW	0	99999999999999999
70	016224	Plastic fibre 1000 Kerathin P /cartouches for HMX, LogWIN Premium 180-505 (*not illustrated)	0	99999999999999999
80	048811	Boiler handle	0	99999999999999999
90	007484	Insulating stone top for automatic ignition LWP18-50, LWK	0	99999999999999999
100	007483	Bottom insulating stone for automatic ignition LWP18-50, LWK	0	99999999999999999
110	006822	LP-Clip RAST 5 8105 B/2 C1 MB SB	0	99999999999999999
120	005025	Power relay OMRON G7L-2A-BUB 200/240AC for PMX,BioWIN XL, BioWIN10-26,FireWIN,VarioWIN, BioWIN XL 35-60	0	99999999999999999
130	051238	Protection plate for ignition	0	99999999999999999
140	031260	Hexagon screw DIN 931 - M6x60	0	99999999999999999
150	051162	Vertical grate LWK/LWP	0	99999999999999999
160	033104	Door mounting bolt ISO 2341-A - 12x32	0	99999999999999999
170	051259	Door mounting automatic ignition LWK	0	99999999999999999
180	051239	Door stone automatic ignition LWK	0	99999999999999999
190	055201	Ignition element BioWIN10-26, FireWIN from lot 15, VarioWIN from lot 15 BioWIN XL, LWK	0	99999999999999999
200	050489	Ignition tube LWP18-50, LWK	0	99999999999999999
210	018140	Cylinder screw 4.2x13 DIN7981ST (not illustrated)	0	99999999999999999

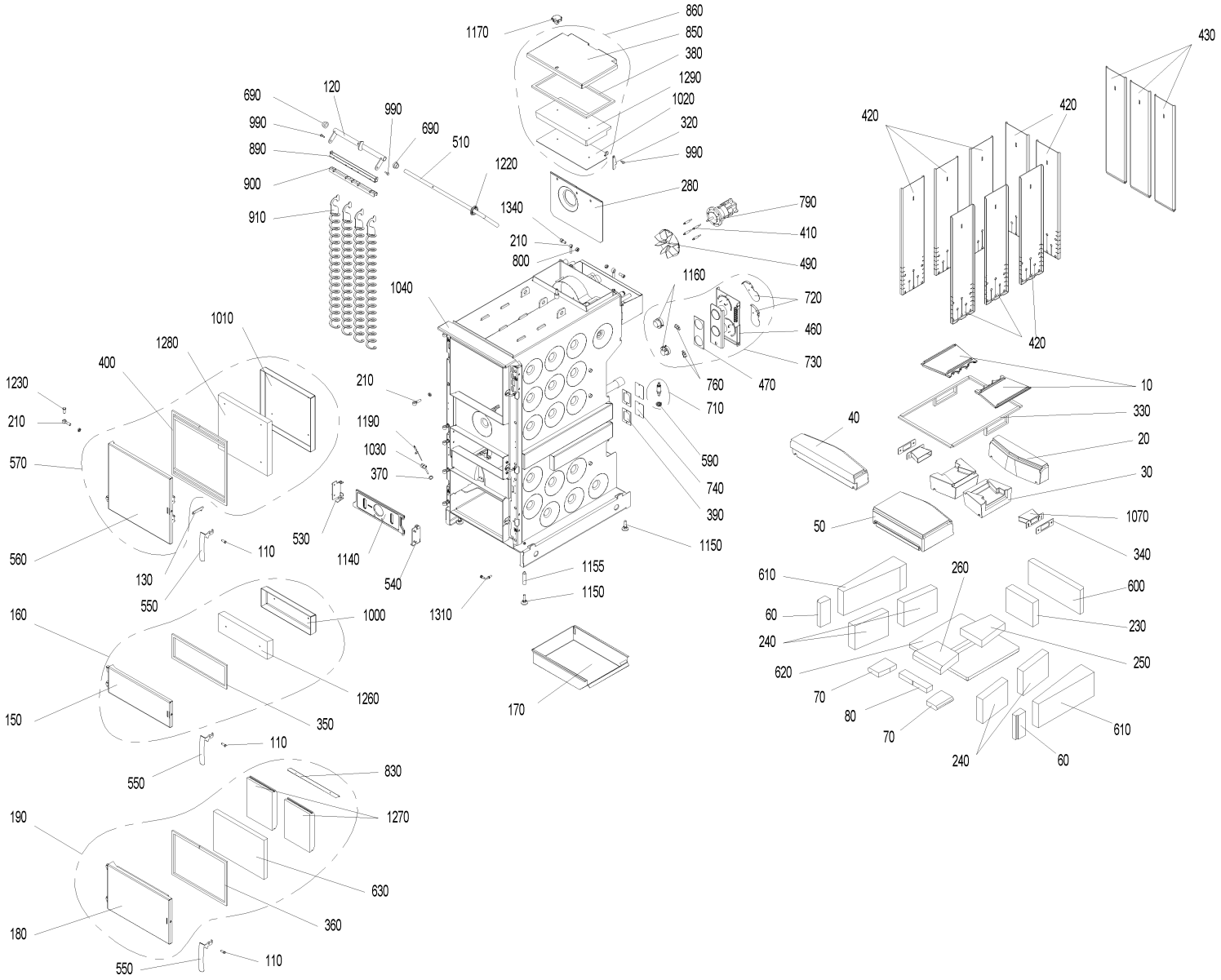
1170
860
850
380
1290
1020
320
990
690
120
990
690
990
890
900
910
510
1220
280
1340
210
800
790
410
490
1160
720
460
730
760
470
710
590
740
390
1150
1155
1150
1310
1040
1010
1280
400
1230
210
570
560
130
550
110
530
1140
540
1190
1030
370
210
1000
160
150
1260
350
110
550
830
1270
190
630
360
180
110
550
170
430
420
420
420
10
330
20
30
1070
340
40
50
610
60
240
620
70
80
70
240
60
610
260
600
230
250

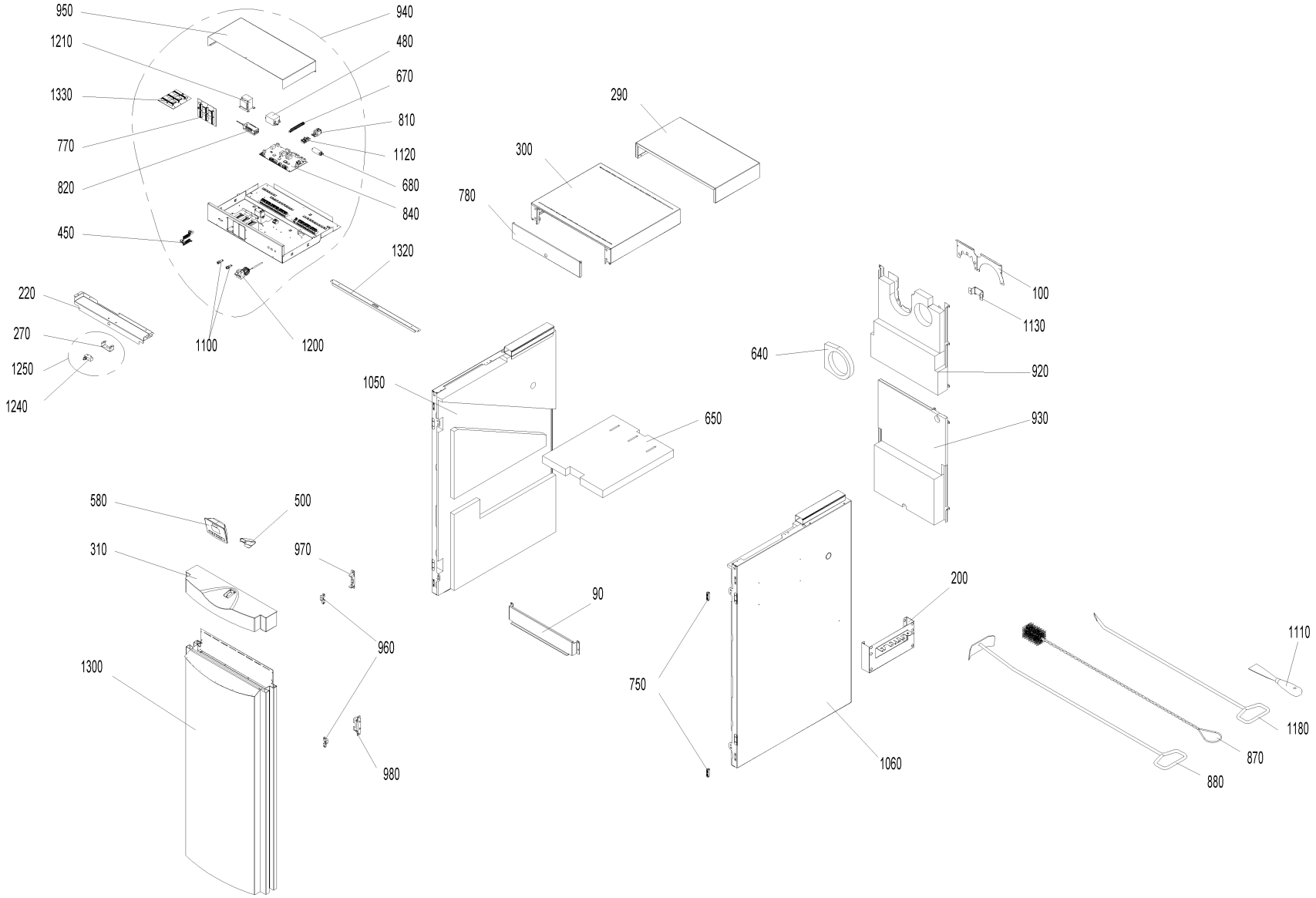
950
940
1210
480
670
1330
810
770
1120
820
680
840
450
1320
220
270
1250
1240
1100
1200
290
300
780
100
1130
640
920
930
1050
650
90
580
500
310
970
960
1300
980
200
750
1060
1110
1180
870
880

Item no.	Article no.	Description	Serialnumber from	Serialnumber t
10	007392	Burning plate LWP/LWK	0	9999999999999
20	007397	Rear burning stone	0	9999999999999
30	007388	Burning stone left/right LWK/LWP	0	9999999999999
50	007377	Front burning stone	0	9999999999999
60	007394	Cover stone left/right for LogWIN Premium 180-305	0	9999999999999
70	007412	Cover stone front left/right for LogWIN Premium 180-505	0	9999999999999
80	007418	Cover stone front centre for LogWIN Premium 180-305	0	9999999999999
90	045414	Thermocontrol sensor cover for LogWIN Premium 180-305	0	9999999999999
100	045635	Blower motor cover for LogWIN Premium 180-505	0	9999999999999
110	013806	Axle for door handle for LogWIN Premium 180-505, BioWIN XL 35-60,EasyWIN Klassik/Premium 180	0	9999999999999
120	046328	Axle for cleaning heating surfaces	0	9999999999999
130	046104	Safety hook for LogWIN Premium 180-505	0	9999999999999
140	046315	Door handle stopper for LogWIN Premium 180-505	0	9999999999999
150	046346	Lighting door complete for LogWIN Premium 180-305	0	9999999999999
160	046346	Lighting door complete for LogWIN Premium 180-305	0	9999999999999
170	045419	Ash pan LWP18-50, LWK	0	9999999999999
190	046348	Ash door complete for LogWIN Premium 180-305	0	9999999999999
200	042743	Holder for cleaning equipments for VarioWIN, LogWIN Premium 180-505,SilvaWIN,BioWIN XL35-60,EasWIN Klassik/Premium 180	0	9999999999999
210	033433	Eyebolt similar to DIN 444 - B M12x50 - 4.6 - bright for VarioWIN, FireWIN,EasyWIN Klassik/Premium 180,LogWIN Premium 180-505	0	9999999999999
220	045716	Cover for cladding door switch for LogWIN Premium 180-305	0	9999999999999
230	007383	Rear combustion chamber stone LWP18-30, LWK	0	9999999999999
240	007382	Combustion chamber stone left/right for LogWIN Premium 180-505	0	9999999999999
250	007384	Bottom rear combustion chamber stone LWP18-30	0	9999999999999
260	007385	Bottom front combustion chamber stone LWP18-30	0	9999999999999
270	045820	Door switch clip LWP / LWK	0	9999999999999
280	046336	Blower wheel cover for LogWIN Premium 180-505	0	9999999999999
290	045393	Rear cover for LogWIN Premium 180-305	0	9999999999999
300	045707	Control panel cover for LogWIN Premium 180-305	0	9999999999999
310	045814	Door cover for LogWIN Premium 180-305	0	9999999999999
320	046339	Cover lock for LogWIN Premium 180-505	0	9999999999999
330	046119	Rope seal kit for burning stones LWP18-30	0	9999999999999
340	007391	Seal for secondary air nozzle LWP180-305	0	9999999999999
350	046267	Lighting door seal LWP18-50, LW	0	9999999999999
360	046268	Ash door seal LWP18-50, LWK	0	9999999999999
370	016136	ZH-099 Thermocontrol sensor seal (Klingerit) 1/4" (24x17x2mm) No.S56155 for LogWIN Premium 180-505	0	9999999999999
380	046123	Cleaning cover seal for LogWIN Premium 180-305	0	9999999999999
390	009378	Seal for vent cover LWP18-50, LWK	0	9999999999999
400	046266	Heating door seal set (16x10x1730 + 16x10x435mm) for LogWIN Premium 180-505	0	9999999999999
410	013807	Blower motor spacer for LogWIN Premium 180-505	0	9999999999999
420	045431	Hook-in plate for LogWIN Premium 180-505	0	9999999999999
440	016224	Plastic fibre 1000 Kerathin P /cartouches for HMX, LogWIN Premium 180-505 (*not illustrated)	0	9999999999999
450	046644	InfoWIN ribbon cable	0	9999999999999
460	045459	Air control flange for LogWIN Premium 180-505	0	9999999999999
470	009305	Flange seal LWP18-50, LWK	0	9999999999999
480	007649	Radio interference filter LWP18-50, LWK	0	9999999999999
490	043441	Blower wheel Ø170mm for HMX, SilvaWIN, LogWIN Premium 180-505	0	9999999999999
500	046311	Housing foot InfoWIN cpl. with fastening material for LogWIN Premium 180-505,BioWIN 10-26,SWK-T,BioWIN XL 35-60	0	9999999999999
510	045447	Handle for cleaning heating surfaces for LogWIN Premium 180-305	0	9999999999999
520	002050	Power supply unit 002049 holding plate for VarioWIN, FireWIN, BioWIN 10-26, BioWIN XL 35-60, LogWIN Premium 180-505	0	9999999999999
530	046040	Holder for left vertical grate for LogWIN Premium 180-505	0	9999999999999
540	045347	Holder for right vertical grate for LogWIN Premium 180-505	0	9999999999999

Item no.	Article no.	Description	Serialnumber from	Serialnumber t
550	048811	Boiler handle	0	9999999999999
570	046342	Heating door complete for LogWIN Premium 180-305	0	9999999999999
580	011985	InfoWINplus HW C4 SW V4.10 BioWIN, LWP, JetWIN, EcoWIN	0	9999999999999
590	007094	Lambda sensor insulating ring for LogWIN Premium 180-505	0	9999999999999
600	007380	Rear insulating stone for LogWIN Premium 180-305	0	9999999999999
610	007379	Insulating stone left/right for LogWIN Premium 180-505	0	9999999999999
620	007381	Bottom insulating stone for LogWIN Premium 180-305	0	9999999999999
630	007091	Ash door insulation 415x279x38 KM1260/128 for LogWIN Premium 180-505	0	9999999999999
640	011096	Smoke pipe insulation 210X200X30 for LogWIN premium 180-505	0	9999999999999
650	011090	Control panel insulation (580x494x50) for LogWIN Premium 180-305	0	9999999999999
660	002059	Power supply cable (not illustrated)	0	9999999999999
665	004385	KFE cock	0	9999999999999
670	009928	Terminal bar	0	9999999999999
680	007330	Condenser for motor MAB 500V, 3µF for HMX,PMX,SWK,BioWIN10-26,FireWIN,VarioWIN,BioWIN XL 35-60, EasyWIN Premium 180,LogWIN Premiu	0	9999999999999
690	007124	Bearing, left for cleaning heating surfaces for LogWIN, EasyWIN Klassik/Premium 180,LogWIN Premium 180-505	0	9999999999999
710	051646	Lambda sensor	0	9999999999999
720	040032	Air choke	0	9999999999999
730	045460	Air control, complete	0	9999999999999
740	046338	Vent cover	0	9999999999999
750	001760	Magnetic lock, black - VW, LWP18-50, LWK	0	9999999999999
760	009277	Air control microswitch	0	9999999999999
770	046001	Module connection PCB for LogWIN Premium 180-505	0	9999999999999
780	045709	Module flap for LogWIN Premium 180-505	0	9999999999999
790	044158	Blower motor with cable for blower for SilvaWIN, LogWIN, FireWIN, BioWIN XL 35-60, EasyWIN Premium 180, LogWIN Premium 180-505	0	9999999999999
800	016624	Nut DIN 934 - M12 - 8 - galvanised for VarioWIN, FireWIN, EasyWIN Klassik/Premium 180, LogWIN Premium 180-505	0	9999999999999
810	041430	Mains connection socket 3-pin for MIRA,ETX,PMX,BioWIN10-26,LogWIN Premium 180-505,EasyWIN Premium 180,BioWIN XL 35-60, FireWIN	0	9999999999999
820	051645	Power supply unit 12V	0	9999999999999
830	045361	Ash door rivet bracket for LogWIN Premium 180-505	0	9999999999999
835	046644	InfoWIN ribbon cable	0	9999999999999
840	011999	FMF PCB for LogWIN Premium 180-505	0	9999999999999
850	046331	Cleaning cover for LogWIN Premium 180-305	0	9999999999999
860	046350	Cleaning cover complete for LogWIN Premium 180-305	0	9999999999999
870	003088	GWX992 Cleaning brush 950x45mm/45x70 mm for GWX, LogWIN Premium 180-505, EasyWIN Klassik/Premium 180	0	9999999999999
880	040328	Cleaning rake for HMX,PMX, EasyWIN Klassik/Premium 180, LogWIN Premium 180-505	0	9999999999999
890	046325	Top cleaning profile for LogWIN Premium 180-305	0	9999999999999
900	046323	Bottom cleaning profile for LogWIN Premium 180-305	0	9999999999999
910	046322	Cleaning auger for LogWIN Premium 180-505	0	9999999999999
920	046304	Rear panel top for LogWIN Premium 180-305	0	9999999999999
930	046306	Rear panel bottom for LogWIN Premium 180-305	0	9999999999999
940	045607	LWP03 SWITCH COVER	0	9999999999999
950	045695	Control panel cover for LogWIN Premium 180-505	0	9999999999999
960	007103	Cladding door hinge for LogWIN Premium 180-505, VarioWIN, BioWIN XL 35-60	0	9999999999999
970	045685	Top hinge bracket for LogWIN Premium 180-505	0	9999999999999
980	045072	Bottom hinge bracket for LogWIN Premium 180-505	0	9999999999999
985	004386	Hose grommet, union nut and seal for KFE ball valve for BioWIN 10-26, BioWIN XL 35-60,LogWIN Premium 180-505	0	9999999999999
990	006756	Screw M6 for heating surface cleaning for PMX,BioWIN 10-26,FireWIN, BioWIN XL 35-60, LogWIN Premium 180-505	0	9999999999999
1000	045360	Lighting door protection plate for LogWIN Premium 180-505	0	9999999999999
1010	046321	Heating door protection plate for LogWIN Premium 180-505	0	9999999999999
1020	046333	Cleaning cover protection plate for LogWIN Premium 180-305	0	9999999999999
1030	044354	Thermocontrol sensor protective tube for SilvaWIN, LogWIN Premium 180-505	0	9999999999999
1040	045394	Carburisation gas duct for LogWIN Premium 180-305	0	9999999999999

Item no.	Article no.	Description	Serialnumber from	Serialnumber t
1050	046300	Side panel left for LogWIN Premium 180-505	0	9999999999999
1060	046303	Side panel right for LogWIN Premium 180-505	0	9999999999999
1070	045326	Secondary air nozzle complete for LogWIN Premium 180-305	0	9999999999999
1075	031096	Countersinking screw M4x20 DIN965 gv KS (not illustrated)	0	9999999999999
1080	009192	OEM0552 2A fuse, 5x20 glass tube Typ 179120 for OEK/M,LogWIN Premium 180-505 *not illustrated	0	9999999999999
1090	003228	6.3A fuse (not illustrated)	0	9999999999999
1100	003663	Fuse holder	0	9999999999999
1110	009540	Spatula	0	9999999999999
1120	009318	Plug ST18/3S sw wie for LogWIN Premium 180-505	0	9999999999999
1130	045718	Plug holder for LogWIN Premium 180-505	0	9999999999999
1140	051162	Vertical grate LWK/LWP	0	9999999999999
1150	009994	Foot M12X40 JTB38 for HMX, EasyWIN Klassik/Premium 180, LogWIN Premium 180-505	0	9999999999999
1155	007453	Leg extension for LogWIN Premium 180-505, EasyWIN Klassik/Premium 180	0	9999999999999
1160	040429	Servomotor for HMX, SilvaWIN, LogWIN Premium 180-505	0	9999999999999
1170	005125	Star handle M12 x 35	0	9999999999999
1180	080664	FAX192 Poker for FAX,HMX,SilvaWIN,FKX,EasyWIN Klassik/Premium 180,LogWIN Premium 180-505	0	9999999999999
1190	007626	Thermocouple	0	9999999999999
1200	046451	Safety thermostat LS1+100/-6, Auger for FireWIN, BioWIN 10-26, BioWIN XL 35-60	0	9999999999999
1210	007096	Transformer for O2 sensor 18VA for LogWIN Premium 180-505	0	9999999999999
1220	004418	Grommet Ø46,5 for: - quick vent and piping XENTA - piping GENIO/MultiWIN10-28 - handle heating surface cleaning LogWIN - EasyWIN	0	9999999999999
1230	033104	Door mounting bolt ISO 2341-A - 12x32	0	9999999999999
1240	007128	Microswitch Z-15GQ-B for LogWIN Premium 180-505, BioWIN XL 35-60	0	9999999999999
1250	046072	Door switch complete for LogWIN Premium 180-505	0	9999999999999
1260	007088	Door stone for lighting door (402x126x50mm) for LogWIN Premium 180-505	0	9999999999999
1270	007089	Door stone for ash door (273x206x40mm) for LogWIN Premium 180-505	0	9999999999999
1280	007087	Door stone for heating door (407x378x40mm) for LogWIN Premium 180-505	0	9999999999999
1290	007122	Door stone for cleaning cover for LogWIN Premium 180-305	0	9999999999999
1300	046308	Cladding door complete for LogWIN Premium 180-305	0	9999999999999
1310	043426	Locking bracket for heating door / ash door for SilvaWIN,LogWIN Premium 180-505, BioWIN XL 35-60, EasyWIN Klassik/Premium 180	0	9999999999999
1330	007095	Extra PCB for O2-mesure or pumping rotation speed control for BioWIN cascade, LogWIN Premium 180-505	0	9999999999999
1340	020117	Cylinder-head screw, hexagon socket ISO 4762 - M12x25 - 8.8 - galva. (DIN 912) for VarioWIN, FireWIN, BioWIN10-26, LogWIN Premium	0	9999999999999

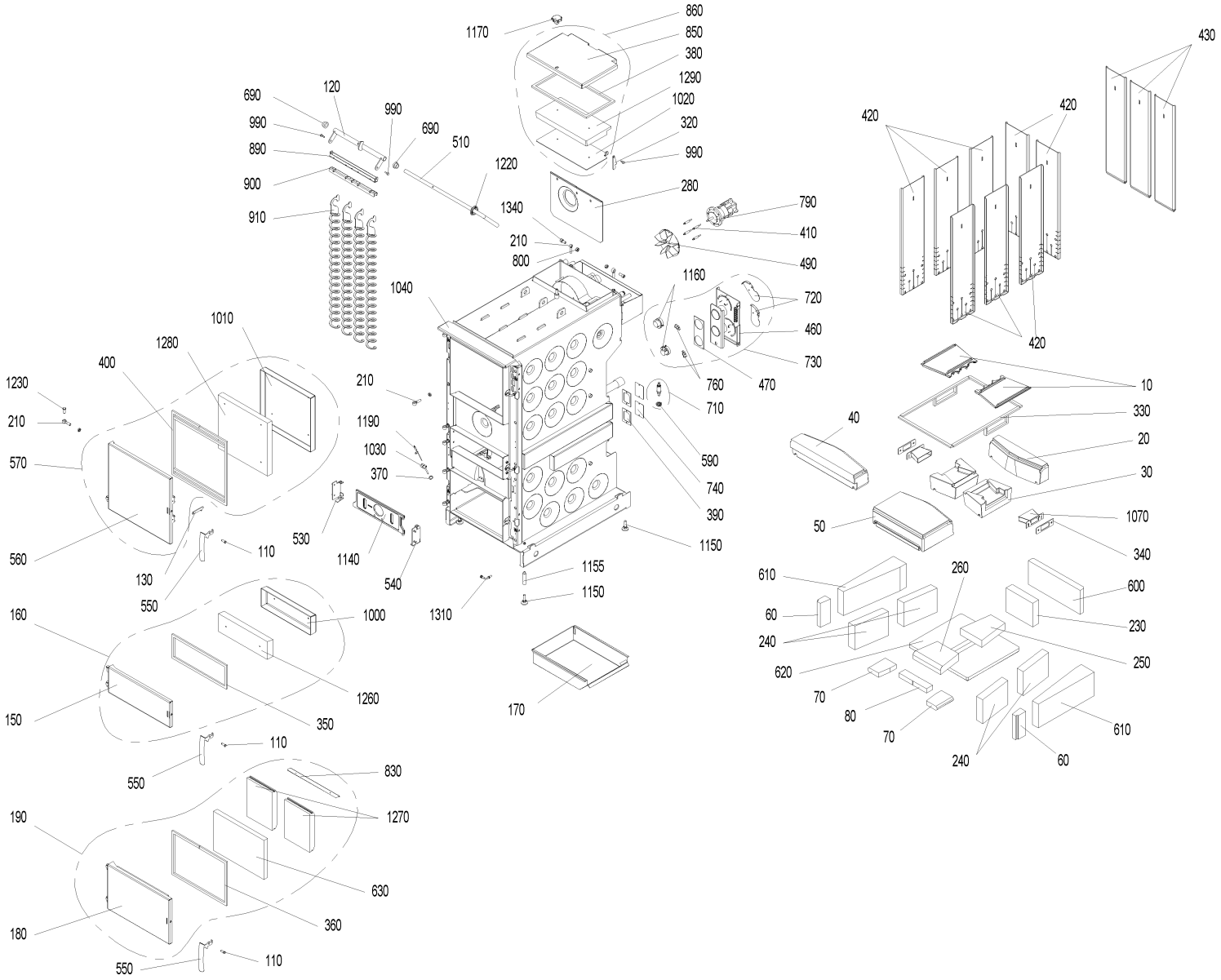
1170
860
850
380
1290
1020
320
990
690
120
990
690
990
890
900
910
510
1220
280
1340
210
800
790
410
490
1160
720
460
730
760
470
710
590
740
390
1150
1155
1150
1310
1040
1010
1280
400
1230
210
570
560
130
550
110
530
1140
540
1190
1030
370
210
1000
1260
350
160
150
110
550
830
1270
630
360
190
180
110
550
170
430
420
420
420
10
330
20
30
1070
340
40
50
610
60
240
620
70
80
70
240
60
610
260
600
230
250

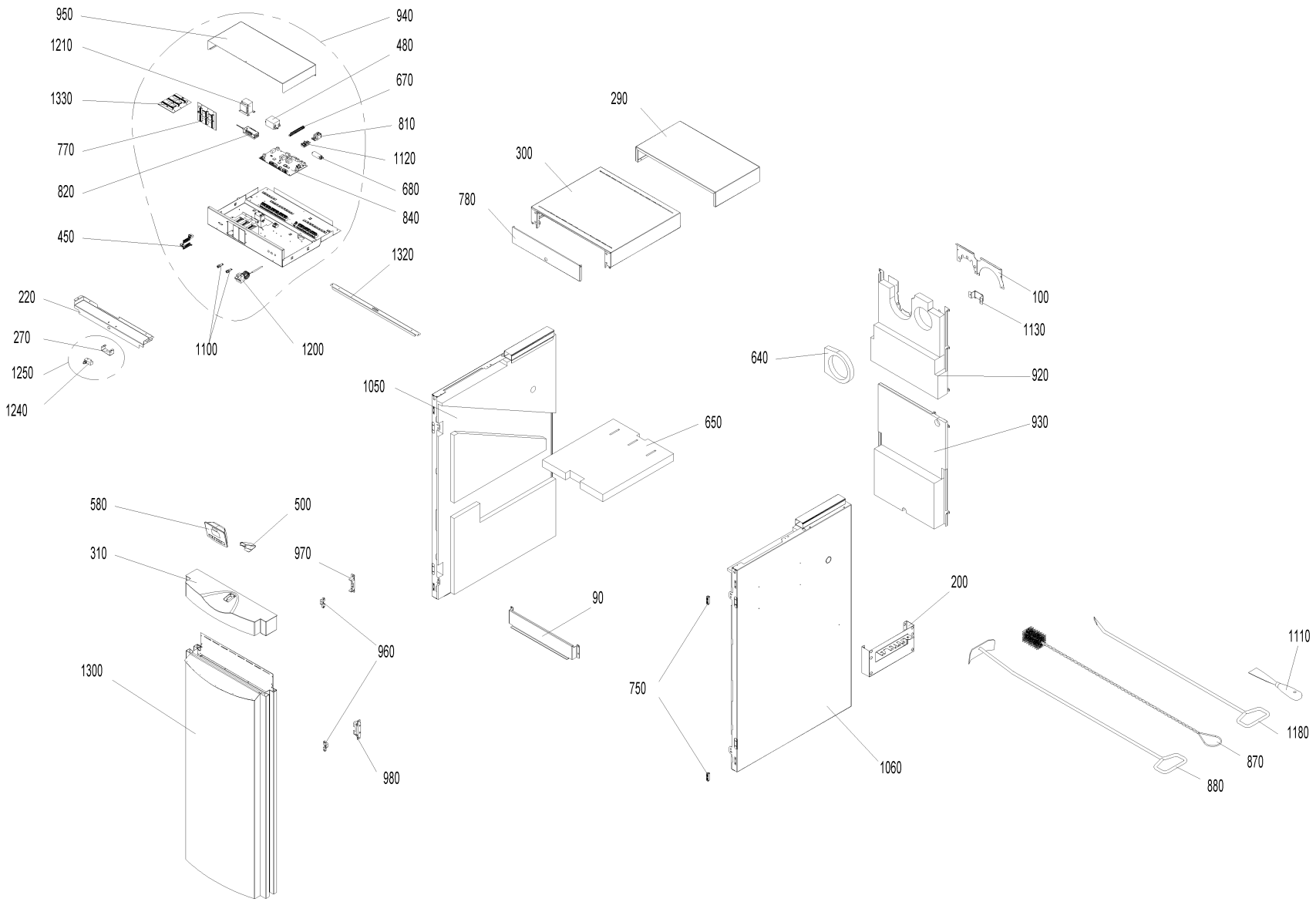
950
940
1210
480
670
1330
810
770
1120
820
680
840
450
1320
220
270
1250
1240
1100
1200
290
300
780
100
1130
640
920
930
1050
650
90
580
500
310
970
960
1300
980
200
750
1060
1110
1180
870
880

Item no.	Article no.	Description	Serialnumber from	Serialnumber t
10	007392	Burning plate LWP/LWK	0	9999999999999
20	007397	Rear burning stone	0	9999999999999
30	007388	Burning stone left/right LWK/LWP	0	9999999999999
50	007377	Front burning stone	0	9999999999999
60	007394	Cover stone left/right for LogWIN Premium 180-305	0	9999999999999
70	007412	Cover stone front left/right for LogWIN Premium 180-505	0	9999999999999
80	007418	Cover stone front centre for LogWIN Premium 180-305	0	9999999999999
90	045414	Thermocontrol sensor cover for LogWIN Premium 180-305	0	9999999999999
100	045635	Blower motor cover for LogWIN Premium 180-505	0	9999999999999
110	013806	Axle for door handle for LogWIN Premium 180-505, BioWIN XL 35-60,EasyWIN Klassik/Premium 180	0	9999999999999
120	046328	Axle for cleaning heating surfaces	0	9999999999999
130	046104	Safety hook for LogWIN Premium 180-505	0	9999999999999
140	046315	Door handle stopper for LogWIN Premium 180-505	0	9999999999999
150	046346	Lighting door complete for LogWIN Premium 180-305	0	9999999999999
160	046346	Lighting door complete for LogWIN Premium 180-305	0	9999999999999
170	045419	Ash pan LWP18-50, LWK	0	9999999999999
190	046348	Ash door complete for LogWIN Premium 180-305	0	9999999999999
200	042743	Holder for cleaning equipments for VarioWIN, LogWIN Premium 180-505,SilvaWIN,BioWIN XL35-60,EasWIN Klassik/Premium 180	0	9999999999999
210	033433	Eyebolt similar to DIN 444 - B M12x50 - 4.6 - bright for VarioWIN, FireWIN,EasyWIN Klassik/Premium 180,LogWIN Premium 180-505	0	9999999999999
220	045716	Cover for cladding door switch for LogWIN Premium 180-305	0	9999999999999
230	007383	Rear combustion chamber stone LWP18-30, LWK	0	9999999999999
240	007382	Combustion chamber stone left/right for LogWIN Premium 180-505	0	9999999999999
250	007384	Bottom rear combustion chamber stone LWP18-30	0	9999999999999
260	007385	Bottom front combustion chamber stone LWP18-30	0	9999999999999
270	045820	Door switch clip LWP / LWK	0	9999999999999
280	046336	Blower wheel cover for LogWIN Premium 180-505	0	9999999999999
290	045393	Rear cover for LogWIN Premium 180-305	0	9999999999999
300	045707	Control panel cover for LogWIN Premium 180-305	0	9999999999999
310	045814	Door cover for LogWIN Premium 180-305	0	9999999999999
320	046339	Cover lock for LogWIN Premium 180-505	0	9999999999999
330	046119	Rope seal kit for burning stones LWP18-30	0	9999999999999
340	007391	Seal for secondary air nozzle LWP180-305	0	9999999999999
350	046267	Lighting door seal LWP18-50, LW	0	9999999999999
360	046268	Ash door seal LWP18-50, LWK	0	9999999999999
370	016136	ZH-099 Thermocontrol sensor seal (Klingerit) 1/4" (24x17x2mm) No.S56155 for LogWIN Premium 180-505	0	9999999999999
380	046123	Cleaning cover seal for LogWIN Premium 180-305	0	9999999999999
390	009378	Seal for vent cover LWP18-50, LWK	0	9999999999999
400	046266	Heating door seal set (16x10x1730 + 16x10x435mm) for LogWIN Premium 180-505	0	9999999999999
410	013807	Blower motor spacer for LogWIN Premium 180-505	0	9999999999999
420	045431	Hook-in plate for LogWIN Premium 180-505	0	9999999999999
440	016224	Plastic fibre 1000 Kerathin P /cartouches for HMX, LogWIN Premium 180-505 (*not illustrated)	0	9999999999999
450	046644	InfoWIN ribbon cable	0	9999999999999
460	045459	Air control flange for LogWIN Premium 180-505	0	9999999999999
470	009305	Flange seal LWP18-50, LWK	0	9999999999999
480	007649	Radio interference filter LWP18-50, LWK	0	9999999999999
490	043441	Blower wheel Ø170mm for HMX, SilvaWIN, LogWIN Premium 180-505	0	9999999999999
500	046311	Housing foot InfoWIN cpl. with fastening material for LogWIN Premium 180-505,BioWIN 10-26,SWK-T,BioWIN XL 35-60	0	9999999999999
510	045447	Handle for cleaning heating surfaces for LogWIN Premium 180-305	0	9999999999999
520	002050	Power supply unit 002049 holding plate for VarioWIN, FireWIN, BioWIN 10-26, BioWIN XL 35-60, LogWIN Premium 180-505	0	9999999999999
530	046040	Holder for left vertical grate for LogWIN Premium 180-505	0	9999999999999
540	045347	Holder for right vertical grate for LogWIN Premium 180-505	0	9999999999999

Item no.	Article no.	Description	Serialnumber from	Serialnumber t
550	048811	Boiler handle	0	9999999999999
570	046342	Heating door complete for LogWIN Premium 180-305	0	9999999999999
580	011985	InfoWINplus HW C4 SW V4.10 BioWIN, LWP, JetWIN, EcoWIN	0	9999999999999
590	007094	Lambda sensor insulating ring for LogWIN Premium 180-505	0	9999999999999
600	007380	Rear insulating stone for LogWIN Premium 180-305	0	9999999999999
610	007379	Insulating stone left/right for LogWIN Premium 180-505	0	9999999999999
620	007381	Bottom insulating stone for LogWIN Premium 180-305	0	9999999999999
630	007091	Ash door insulation 415x279x38 KM1260/128 for LogWIN Premium 180-505	0	9999999999999
640	011096	Smoke pipe insulation 210X200X30 for LogWIN premium 180-505	0	9999999999999
650	011090	Control panel insulation (580x494x50) for LogWIN Premium 180-305	0	9999999999999
660	002059	Power supply cable (not illustrated)	0	9999999999999
665	004385	KFE cock	0	9999999999999
670	009928	Terminal bar	0	9999999999999
680	007330	Condenser for motor MAB 500V, 3µF for HMX,PMX,SWK,BioWIN10-26,FireWIN,VarioWIN,BioWIN XL 35-60, EasyWIN Premium 180,LogWIN Premiu	0	9999999999999
690	007124	Bearing, left for cleaning heating surfaces for LogWIN, EasyWIN Klassik/Premium 180,LogWIN Premium 180-505	0	9999999999999
710	051646	Lambda sensor	0	9999999999999
720	040032	Air choke	0	9999999999999
730	045460	Air control, complete	0	9999999999999
740	046338	Vent cover	0	9999999999999
750	001760	Magnetic lock, black - VW, LWP18-50, LWK	0	9999999999999
760	009277	Air control microswitch	0	9999999999999
770	046001	Module connection PCB for LogWIN Premium 180-505	0	9999999999999
780	045709	Module flap for LogWIN Premium 180-505	0	9999999999999
790	044158	Blower motor with cable for blower for SilvaWIN, LogWIN, FireWIN, BioWIN XL 35-60, EasyWIN Premium 180, LogWIN Premium 180-505	0	9999999999999
800	016624	Nut DIN 934 - M12 - 8 - galvanised for VarioWIN, FireWIN, EasyWIN Klassik/Premium 180, LogWIN Premium 180-505	0	9999999999999
810	041430	Mains connection socket 3-pin for MIRA,ETX,PMX,BioWIN10-26,LogWIN Premium 180-505,EasyWIN Premium 180,BioWIN XL 35-60, FireWIN	0	9999999999999
820	051645	Power supply unit 12V	0	9999999999999
830	045361	Ash door rivet bracket for LogWIN Premium 180-505	0	9999999999999
835	046644	InfoWIN ribbon cable	0	9999999999999
840	011999	FMF PCB for LogWIN Premium 180-505	0	9999999999999
850	046331	Cleaning cover for LogWIN Premium 180-305	0	9999999999999
860	046350	Cleaning cover complete for LogWIN Premium 180-305	0	9999999999999
870	003088	GWX992 Cleaning brush 950x45mm/45x70 mm for GWX, LogWIN Premium 180-505, EasyWIN Klassik/Premium 180	0	9999999999999
880	040328	Cleaning rake for HMX,PMX, EasyWIN Klassik/Premium 180, LogWIN Premium 180-505	0	9999999999999
890	046325	Top cleaning profile for LogWIN Premium 180-305	0	9999999999999
900	046323	Bottom cleaning profile for LogWIN Premium 180-305	0	9999999999999
910	046322	Cleaning auger for LogWIN Premium 180-505	0	9999999999999
920	046304	Rear panel top for LogWIN Premium 180-305	0	9999999999999
930	046306	Rear panel bottom for LogWIN Premium 180-305	0	9999999999999
940	045607	LWP03 SWITCH COVER	0	9999999999999
950	045695	Control panel cover for LogWIN Premium 180-505	0	9999999999999
960	007103	Cladding door hinge for LogWIN Premium 180-505, VarioWIN, BioWIN XL 35-60	0	9999999999999
970	045685	Top hinge bracket for LogWIN Premium 180-505	0	9999999999999
980	045072	Bottom hinge bracket for LogWIN Premium 180-505	0	9999999999999
985	004386	Hose grommet, union nut and seal for KFE ball valve for BioWIN 10-26, BioWIN XL 35-60,LogWIN Premium 180-505	0	9999999999999
990	006756	Screw M6 for heating surface cleaning for PMX,BioWIN 10-26,FireWIN, BioWIN XL 35-60, LogWIN Premium 180-505	0	9999999999999
1000	045360	Lighting door protection plate for LogWIN Premium 180-505	0	9999999999999
1010	046321	Heating door protection plate for LogWIN Premium 180-505	0	9999999999999
1020	046333	Cleaning cover protection plate for LogWIN Premium 180-305	0	9999999999999
1030	044354	Thermocontrol sensor protective tube for SilvaWIN, LogWIN Premium 180-505	0	9999999999999
1040	045394	Carburisation gas duct for LogWIN Premium 180-305	0	9999999999999

Item no.	Article no.	Description	Serialnumber from	Serialnumber t
1050	046300	Side panel left for LogWIN Premium 180-505	0	9999999999999
1060	046303	Side panel right for LogWIN Premium 180-505	0	9999999999999
1070	045326	Secondary air nozzle complete for LogWIN Premium 180-305	0	9999999999999
1075	031096	Countersinking screw M4x20 DIN965 gv KS (not illustrated)	0	9999999999999
1080	009192	OEM0552 2A fuse, 5x20 glass tube Typ 179120 for OEK/M,LogWIN Premium 180-505 *not illustrated	0	9999999999999
1090	003228	6.3A fuse (not illustrated)	0	9999999999999
1100	003663	Fuse holder	0	9999999999999
1110	009540	Spatula	0	9999999999999
1120	009318	Plug ST18/3S sw wie for LogWIN Premium 180-505	0	9999999999999
1130	045718	Plug holder for LogWIN Premium 180-505	0	9999999999999
1140	051162	Vertical grate LWK/LWP	0	9999999999999
1150	009994	Foot M12X40 JTB38 for HMX, EasyWIN Klassik/Premium 180, LogWIN Premium 180-505	0	9999999999999
1155	007453	Leg extension for LogWIN Premium 180-505, EasyWIN Klassik/Premium 180	0	9999999999999
1160	040429	Servomotor for HMX, SilvaWIN, LogWIN Premium 180-505	0	9999999999999
1170	005125	Star handle M12 x 35	0	9999999999999
1180	080664	FAX192 Poker for FAX,HMX,SilvaWIN,FKX,EasyWIN Klassik/Premium 180,LogWIN Premium 180-505	0	9999999999999
1190	007626	Thermocouple	0	9999999999999
1200	046451	Safety thermostat LS1+100/-6, Auger for FireWIN, BioWIN 10-26, BioWIN XL 35-60	0	9999999999999
1210	007096	Transformer for O2 sensor 18VA for LogWIN Premium 180-505	0	9999999999999
1220	004418	Grommet Ø46,5 for: - quick vent and piping XENTA - piping GENIO/MultiWIN10-28 - handle heating surface cleaning LogWIN - EasyWIN	0	9999999999999
1230	033104	Door mounting bolt ISO 2341-A - 12x32	0	9999999999999
1240	007128	Microswitch Z-15GQ-B for LogWIN Premium 180-505, BioWIN XL 35-60	0	9999999999999
1250	046072	Door switch complete for LogWIN Premium 180-505	0	9999999999999
1260	007088	Door stone for lighting door (402x126x50mm) for LogWIN Premium 180-505	0	9999999999999
1270	007089	Door stone for ash door (273x206x40mm) for LogWIN Premium 180-505	0	9999999999999
1280	007087	Door stone for heating door (407x378x40mm) for LogWIN Premium 180-505	0	9999999999999
1290	007122	Door stone for cleaning cover for LogWIN Premium 180-305	0	9999999999999
1300	046308	Cladding door complete for LogWIN Premium 180-305	0	9999999999999
1310	043426	Locking bracket for heating door / ash door for SilvaWIN,LogWIN Premium 180-505, BioWIN XL 35-60, EasyWIN Klassik/Premium 180	0	9999999999999
1330	007095	Extra PCB for O2-mesure or pumping rotation speed control for BioWIN cascade, LogWIN Premium 180-505	0	9999999999999
1340	020117	Cylinder-head screw, hexagon socket ISO 4762 - M12x25 - 8.8 - galva. (DIN 912) for VarioWIN, FireWIN, BioWIN10-26, LogWIN Premium	0	9999999999999

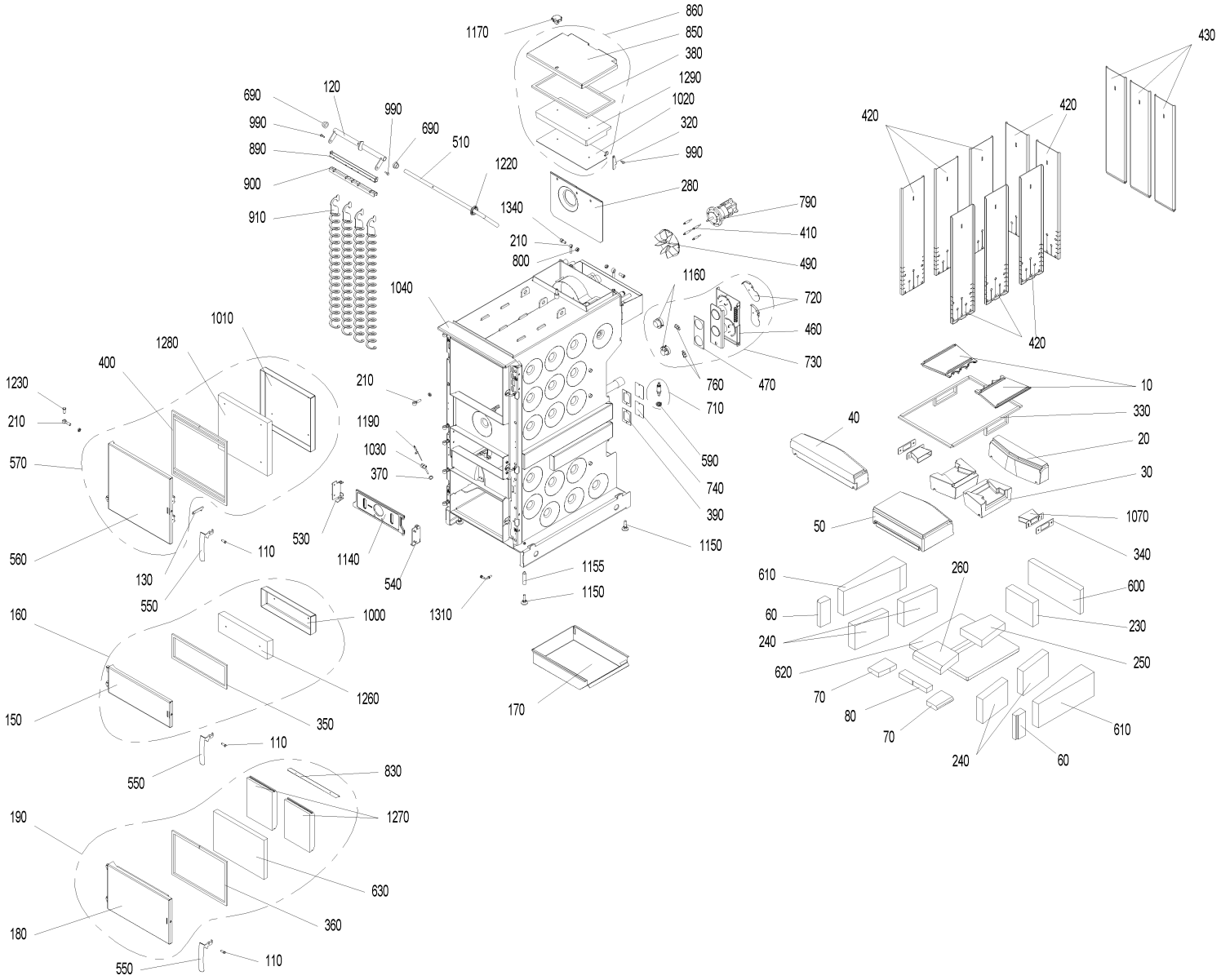
1170
860
850
380
1290
1020
320
990
690
120
990
690
990
890
900
910
510
1220
280
1340
210
800
790
410
490
1160
720
460
730
760
470
710
590
740
390
1150
1155
1150
1310
1040
1010
1280
400
1230
210
570
560
130
550
110
530
1140
540
1190
1030
370
210
1000
1260
350
160
150
110
550
830
1270
630
360
190
180
110
550
170
430
420
420
420
10
330
20
30
1070
340
40
50
610
60
240
620
70
80
70
240
60
610
260
600
230
250

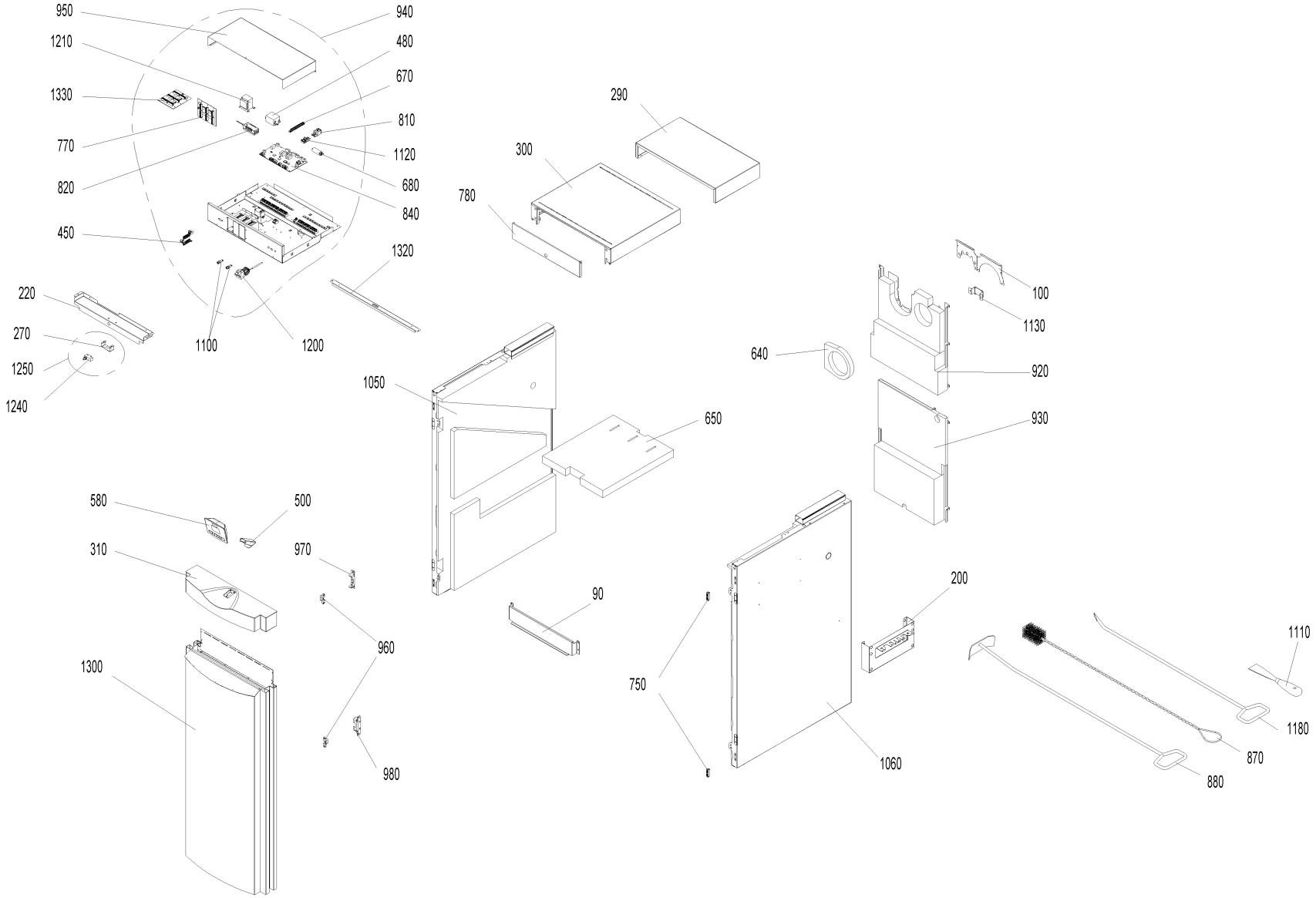
950
940
1210
480
670
1330
810
770
1120
820
680
840
450
1320
220
270
1250
1240
1100
1200
290
300
780
100
1130
640
920
930
1050
650
90
580
500
310
970
960
1300
980
200
750
1060
1110
1180
870
880

Item no.	Article no.	Description	Serialnumber from	Serialnumber t
10	007392	Burning plate LWP/LWK	0	9999999999999
20	007397	Rear burning stone	0	9999999999999
30	007388	Burning stone left/right LWK/LWP	0	9999999999999
50	007377	Front burning stone	0	9999999999999
60	007394	Cover stone left/right for LogWIN Premium 180-305	0	9999999999999
70	007412	Cover stone front left/right for LogWIN Premium 180-505	0	9999999999999
80	007418	Cover stone front centre for LogWIN Premium 180-305	0	9999999999999
90	045414	Thermocontrol sensor cover for LogWIN Premium 180-305	0	9999999999999
100	045635	Blower motor cover for LogWIN Premium 180-505	0	9999999999999
110	013806	Axle for door handle for LogWIN Premium 180-505, BioWIN XL 35-60,EasyWIN Klassik/Premium 180	0	9999999999999
120	046328	Axle for cleaning heating surfaces	0	9999999999999
130	046104	Safety hook for LogWIN Premium 180-505	0	9999999999999
140	046315	Door handle stopper for LogWIN Premium 180-505	0	9999999999999
150	046346	Lighting door complete for LogWIN Premium 180-305	0	9999999999999
160	046346	Lighting door complete for LogWIN Premium 180-305	0	9999999999999
170	045419	Ash pan LWP18-50, LWK	0	9999999999999
190	046348	Ash door complete for LogWIN Premium 180-305	0	9999999999999
200	042743	Holder for cleaning equipments for VarioWIN, LogWIN Premium 180-505,SilvaWIN,BioWIN XL35-60,EasWIN Klassik/Premium 180	0	9999999999999
210	033433	Eyebolt similar to DIN 444 - B M12x50 - 4.6 - bright for VarioWIN, FireWIN,EasyWIN Klassik/Premium 180,LogWIN Premium 180-505	0	9999999999999
220	045716	Cover for cladding door switch for LogWIN Premium 180-305	0	9999999999999
230	007383	Rear combustion chamber stone LWP18-30, LWK	0	9999999999999
240	007382	Combustion chamber stone left/right for LogWIN Premium 180-505	0	9999999999999
250	007384	Bottom rear combustion chamber stone LWP18-30	0	9999999999999
260	007385	Bottom front combustion chamber stone LWP18-30	0	9999999999999
270	045820	Door switch clip LWP / LWK	0	9999999999999
280	046336	Blower wheel cover for LogWIN Premium 180-505	0	9999999999999
290	045393	Rear cover for LogWIN Premium 180-305	0	9999999999999
300	045707	Control panel cover for LogWIN Premium 180-305	0	9999999999999
310	045814	Door cover for LogWIN Premium 180-305	0	9999999999999
320	046339	Cover lock for LogWIN Premium 180-505	0	9999999999999
330	046119	Rope seal kit for burning stones LWP18-30	0	9999999999999
340	007391	Seal for secondary air nozzle LWP180-305	0	9999999999999
350	046267	Lighting door seal LWP18-50, LW	0	9999999999999
360	046268	Ash door seal LWP18-50, LWK	0	9999999999999
370	016136	ZH-099 Thermocontrol sensor seal (Klingerit) 1/4" (24x17x2mm) No.S56155 for LogWIN Premium 180-505	0	9999999999999
380	046123	Cleaning cover seal for LogWIN Premium 180-305	0	9999999999999
390	009378	Seal for vent cover LWP18-50, LWK	0	9999999999999
400	046266	Heating door seal set (16x10x1730 + 16x10x435mm) for LogWIN Premium 180-505	0	9999999999999
410	013807	Blower motor spacer for LogWIN Premium 180-505	0	9999999999999
420	045431	Hook-in plate for LogWIN Premium 180-505	0	9999999999999
440	016224	Plastic fibre 1000 Kerathin P /cartouches for HMX, LogWIN Premium 180-505 (*not illustrated)	0	9999999999999
450	046644	InfoWIN ribbon cable	0	9999999999999
460	045459	Air control flange for LogWIN Premium 180-505	0	9999999999999
470	009305	Flange seal LWP18-50, LWK	0	9999999999999
480	007649	Radio interference filter LWP18-50, LWK	0	9999999999999
490	043441	Blower wheel Ø170mm for HMX, SilvaWIN, LogWIN Premium 180-505	0	9999999999999
500	046311	Housing foot InfoWIN cpl. with fastening material for LogWIN Premium 180-505,BioWIN 10-26,SWK-T,BioWIN XL 35-60	0	9999999999999
510	045447	Handle for cleaning heating surfaces for LogWIN Premium 180-305	0	9999999999999
520	002050	Power supply unit 002049 holding plate for VarioWIN, FireWIN, BioWIN 10-26, BioWIN XL 35-60, LogWIN Premium 180-505	0	9999999999999
530	046040	Holder for left vertical grate for LogWIN Premium 180-505	0	9999999999999
540	045347	Holder for right vertical grate for LogWIN Premium 180-505	0	9999999999999

Item no.	Article no.	Description	Serialnumber from	Serialnumber t
550	048811	Boiler handle	0	9999999999999
570	046342	Heating door complete for LogWIN Premium 180-305	0	9999999999999
580	011985	InfoWINplus HW C4 SW V4.10 BioWIN, LWP, JetWIN, EcoWIN	0	9999999999999
590	007094	Lambda sensor insulating ring for LogWIN Premium 180-505	0	9999999999999
600	007380	Rear insulating stone for LogWIN Premium 180-305	0	9999999999999
610	007379	Insulating stone left/right for LogWIN Premium 180-505	0	9999999999999
620	007381	Bottom insulating stone for LogWIN Premium 180-305	0	9999999999999
630	007091	Ash door insulation 415x279x38 KM1260/128 for LogWIN Premium 180-505	0	9999999999999
640	011096	Smoke pipe insulation 210X200X30 for LogWIN premium 180-505	0	9999999999999
650	011090	Control panel insulation (580x494x50) for LogWIN Premium 180-305	0	9999999999999
660	002059	Power supply cable (not illustrated)	0	9999999999999
665	004385	KFE cock	0	9999999999999
670	009928	Terminal bar	0	9999999999999
680	007330	Condenser for motor MAB 500V, 3µF for HMX,PMX,SWK,BioWIN10-26,FireWIN,VarioWIN,BioWIN XL 35-60, EasyWIN Premium 180,LogWIN Premiu	0	9999999999999
690	007124	Bearing, left for cleaning heating surfaces for LogWIN, EasyWIN Klassik/Premium 180,LogWIN Premium 180-505	0	9999999999999
710	051646	Lambda sensor	0	9999999999999
720	040032	Air choke	0	9999999999999
730	045460	Air control, complete	0	9999999999999
740	046338	Vent cover	0	9999999999999
750	001760	Magnetic lock, black - VW, LWP18-50, LWK	0	9999999999999
760	009277	Air control microswitch	0	9999999999999
770	046001	Module connection PCB for LogWIN Premium 180-505	0	9999999999999
780	045709	Module flap for LogWIN Premium 180-505	0	9999999999999
790	044158	Blower motor with cable for blower for SilvaWIN, LogWIN, FireWIN, BioWIN XL 35-60, EasyWIN Premium 180, LogWIN Premium 180-505	0	9999999999999
800	016624	Nut DIN 934 - M12 - 8 - galvanised for VarioWIN, FireWIN, EasyWIN Klassik/Premium 180, LogWIN Premium 180-505	0	9999999999999
810	041430	Mains connection socket 3-pin for MIRA,ETX,PMX,BioWIN10-26,LogWIN Premium 180-505,EasyWIN Premium 180,BioWIN XL 35-60, FireWIN	0	9999999999999
820	051645	Power supply unit 12V	0	9999999999999
830	045361	Ash door rivet bracket for LogWIN Premium 180-505	0	9999999999999
835	046644	InfoWIN ribbon cable	0	9999999999999
840	011999	FMF PCB for LogWIN Premium 180-505	0	9999999999999
850	046331	Cleaning cover for LogWIN Premium 180-305	0	9999999999999
860	046350	Cleaning cover complete for LogWIN Premium 180-305	0	9999999999999
870	003088	GWX992 Cleaning brush 950x45mm/45x70 mm for GWX, LogWIN Premium 180-505, EasyWIN Klassik/Premium 180	0	9999999999999
880	040328	Cleaning rake for HMX,PMX, EasyWIN Klassik/Premium 180, LogWIN Premium 180-505	0	9999999999999
890	046325	Top cleaning profile for LogWIN Premium 180-305	0	9999999999999
900	046323	Bottom cleaning profile for LogWIN Premium 180-305	0	9999999999999
910	046322	Cleaning auger for LogWIN Premium 180-505	0	9999999999999
920	046304	Rear panel top for LogWIN Premium 180-305	0	9999999999999
930	046306	Rear panel bottom for LogWIN Premium 180-305	0	9999999999999
940	045607	LWP03 SWITCH COVER	0	9999999999999
950	045695	Control panel cover for LogWIN Premium 180-505	0	9999999999999
960	007103	Cladding door hinge for LogWIN Premium 180-505, VarioWIN, BioWIN XL 35-60	0	9999999999999
970	045685	Top hinge bracket for LogWIN Premium 180-505	0	9999999999999
980	045072	Bottom hinge bracket for LogWIN Premium 180-505	0	9999999999999
985	004386	Hose grommet, union nut and seal for KFE ball valve for BioWIN 10-26, BioWIN XL 35-60,LogWIN Premium 180-505	0	9999999999999
990	006756	Screw M6 for heating surface cleaning for PMX,BioWIN 10-26,FireWIN, BioWIN XL 35-60, LogWIN Premium 180-505	0	9999999999999
1000	045360	Lighting door protection plate for LogWIN Premium 180-505	0	9999999999999
1010	046321	Heating door protection plate for LogWIN Premium 180-505	0	9999999999999
1020	046333	Cleaning cover protection plate for LogWIN Premium 180-305	0	9999999999999
1030	044354	Thermocontrol sensor protective tube for SilvaWIN, LogWIN Premium 180-505	0	9999999999999
1040	045394	Carburisation gas duct for LogWIN Premium 180-305	0	9999999999999

Item no.	Article no.	Description	Serialnumber from	Serialnumber t
1050	046300	Side panel left for LogWIN Premium 180-505	0	9999999999999
1060	046303	Side panel right for LogWIN Premium 180-505	0	9999999999999
1070	045326	Secondary air nozzle complete for LogWIN Premium 180-305	0	9999999999999
1075	031096	Countersinking screw M4x20 DIN965 gv KS (not illustrated)	0	9999999999999
1080	009192	OEM0552 2A fuse, 5x20 glass tube Typ 179120 for OEK/M,LogWIN Premium 180-505 *not illustrated	0	9999999999999
1090	003228	6.3A fuse (not illustrated)	0	9999999999999
1100	003663	Fuse holder	0	9999999999999
1110	009540	Spatula	0	9999999999999
1120	009318	Plug ST18/3S sw wie for LogWIN Premium 180-505	0	9999999999999
1130	045718	Plug holder for LogWIN Premium 180-505	0	9999999999999
1140	051162	Vertical grate LWK/LWP	0	9999999999999
1150	009994	Foot M12X40 JTB38 for HMX, EasyWIN Klassik/Premium 180, LogWIN Premium 180-505	0	9999999999999
1155	007453	Leg extension for LogWIN Premium 180-505, EasyWIN Klassik/Premium 180	0	9999999999999
1160	040429	Servomotor for HMX, SilvaWIN, LogWIN Premium 180-505	0	9999999999999
1170	005125	Star handle M12 x 35	0	9999999999999
1180	080664	FAX192 Poker for FAX,HMX,SilvaWIN,FKX,EasyWIN Klassik/Premium 180,LogWIN Premium 180-505	0	9999999999999
1190	007626	Thermocouple	0	9999999999999
1200	046451	Safety thermostat LS1+100/-6, Auger for FireWIN, BioWIN 10-26, BioWIN XL 35-60	0	9999999999999
1210	007096	Transformer for O2 sensor 18VA for LogWIN Premium 180-505	0	9999999999999
1220	004418	Grommet Ø46,5 for: - quick vent and piping XENTA - piping GENIO/MultiWIN10-28 - handle heating surface cleaning LogWIN - EasyWIN	0	9999999999999
1230	033104	Door mounting bolt ISO 2341-A - 12x32	0	9999999999999
1240	007128	Microswitch Z-15GQ-B for LogWIN Premium 180-505, BioWIN XL 35-60	0	9999999999999
1250	046072	Door switch complete for LogWIN Premium 180-505	0	9999999999999
1260	007088	Door stone for lighting door (402x126x50mm) for LogWIN Premium 180-505	0	9999999999999
1270	007089	Door stone for ash door (273x206x40mm) for LogWIN Premium 180-505	0	9999999999999
1280	007087	Door stone for heating door (407x378x40mm) for LogWIN Premium 180-505	0	9999999999999
1290	007122	Door stone for cleaning cover for LogWIN Premium 180-305	0	9999999999999
1300	046308	Cladding door complete for LogWIN Premium 180-305	0	9999999999999
1310	043426	Locking bracket for heating door / ash door for SilvaWIN,LogWIN Premium 180-505, BioWIN XL 35-60, EasyWIN Klassik/Premium 180	0	9999999999999
1330	007095	Extra PCB for O2-mesure or pumping rotation speed control for BioWIN cascade, LogWIN Premium 180-505	0	9999999999999
1340	020117	Cylinder-head screw, hexagon socket ISO 4762 - M12x25 - 8.8 - galva. (DIN 912) for VarioWIN, FireWIN, BioWIN10-26, LogWIN Premium	0	9999999999999

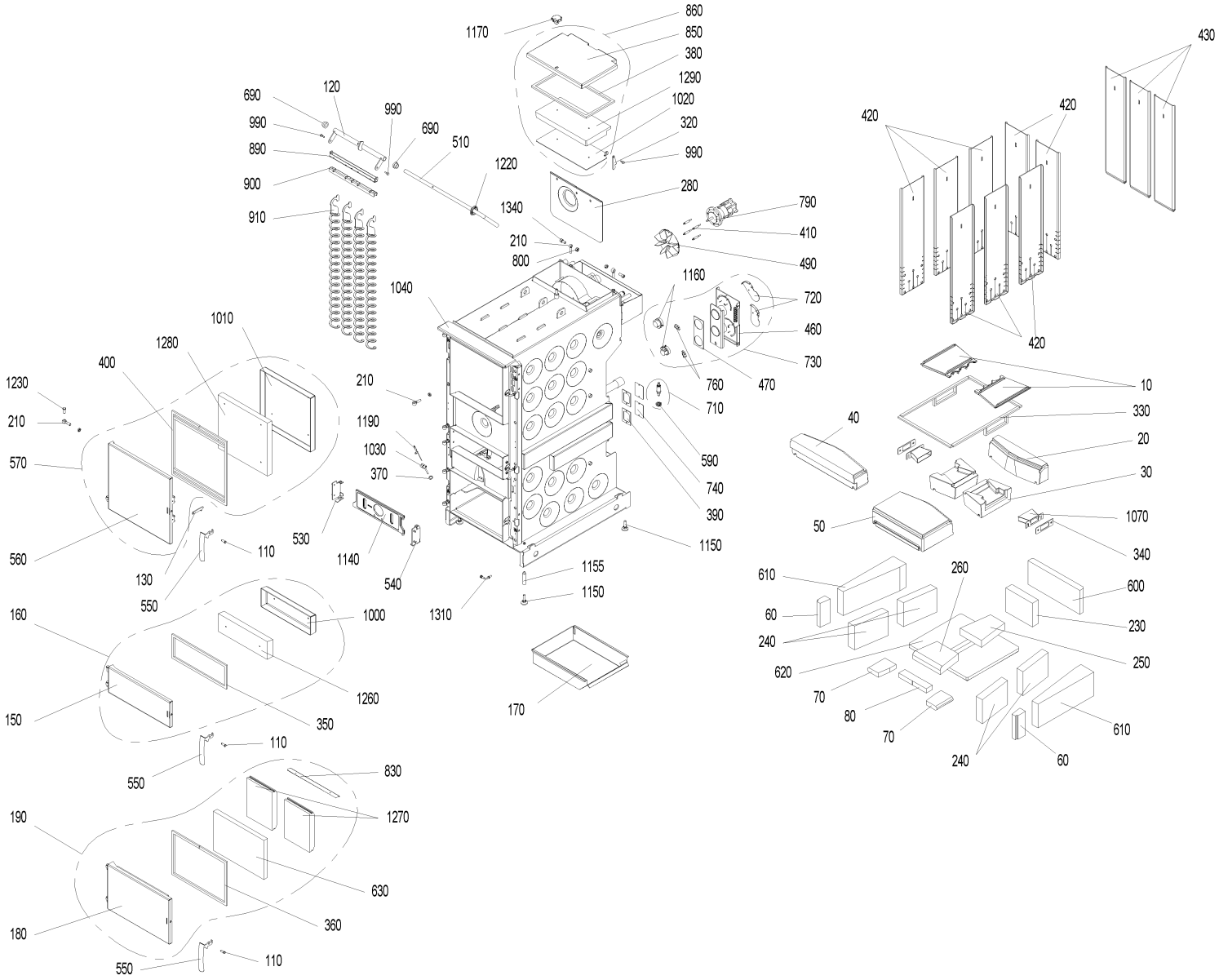
1170
860
850
380
1290
1020
320
990
690
120
990
690
990
890
900
910
510
1220
280
1340
210
800
790
410
490
1160
720
460
730
760
470
710
590
740
390
1150
1155
1150
1310
1040
1010
1280
400
1230
210
570
560
130
550
110
530
1140
540
1190
1030
370
210
1000
1260
350
160
150
110
550
830
1270
630
360
190
180
110
550
170
430
420
420
420
10
330
20
30
1070
340
40
50
610
60
240
620
70
80
70
240
60
610
260
600
230
250

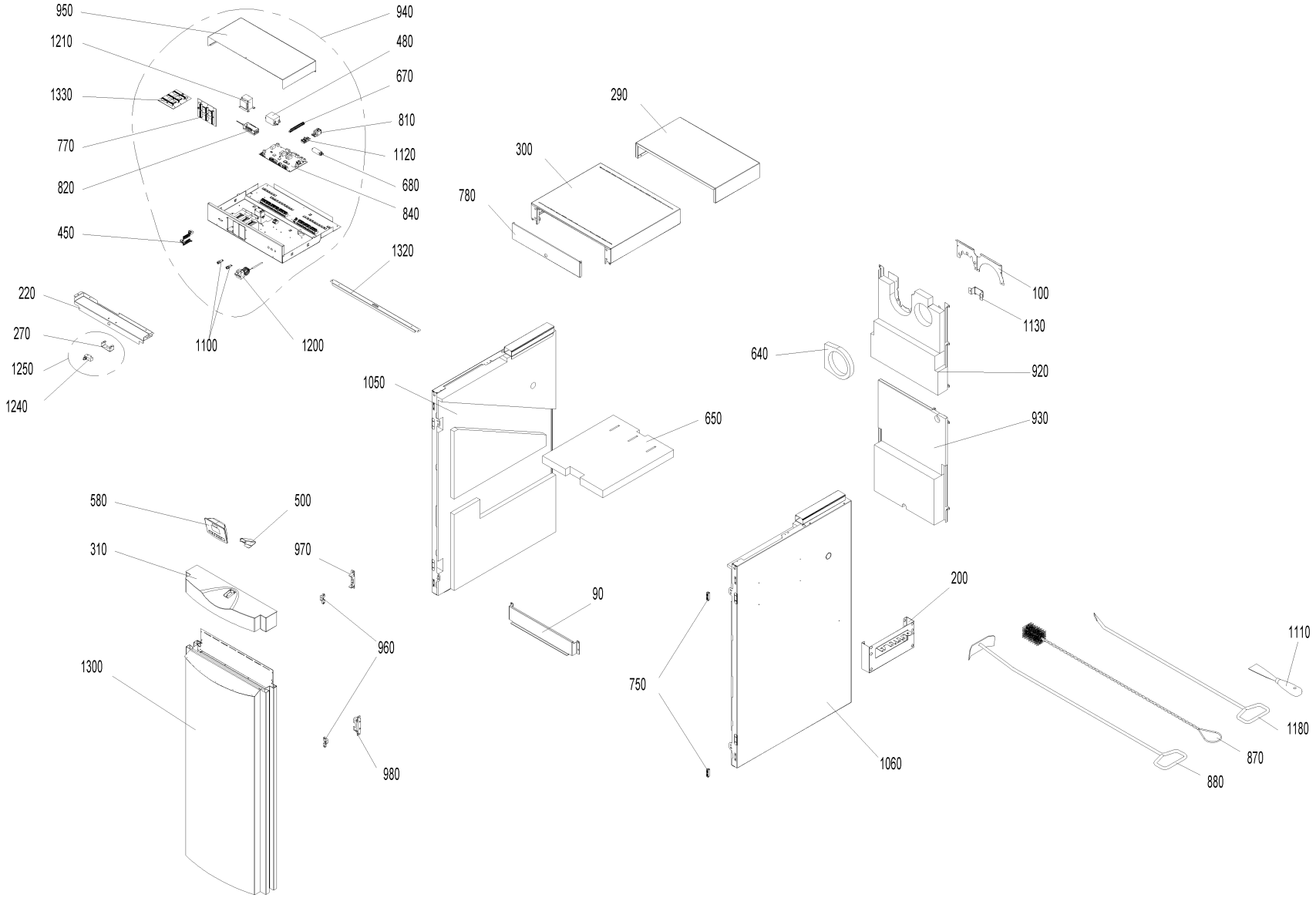
950
940
1210
480
670
1330
810
770
1120
820
680
840
450
1320
220
270
1250
1240
1100
1200
290
300
780
100
1130
640
920
930
1050
650
90
580
500
310
970
960
1300
980
200
750
1060
1110
1180
870
880

Item no.	Article no.	Description	Serialnumber from	Serialnumber t
10	007414	Burning plate for LogWIN Premium 360-505	0	9999999999999
20	007401	Rear burning stone for LogWIN Premium 360-505	0	9999999999999
30	007400	Burning stone left/right for LogWIN Premium 360-505	0	9999999999999
40	007399	Centre burning stone for LogWIN Premium 360-505	0	9999999999999
50	007398	Front burning stone for LogWIN Premium 360-505	0	9999999999999
70	007412	Cover stone front left/right for LogWIN Premium 180-505	0	9999999999999
80	007419	Cover stone front centre for LogWIN Premium 360-505	0	9999999999999
90	045691	Thermocontrol sensor cover for LogWIN Premium 360-505	0	9999999999999
100	045635	Blower motor cover for LogWIN Premium 180-505	0	9999999999999
110	013806	Axle for door handle for LogWIN Premium 180-505, BioWIN XL 35-60,EasyWIN Klassik/Premium 180	0	9999999999999
120	046330	Axle for cleaning heating surfaces for LogWIn Premium 360-505	0	9999999999999
130	046104	Safety hook for LogWIN Premium 180-505	0	9999999999999
140	046315	Door handle stopper for LogWIN Premium 180-505	0	9999999999999
160	046347	Lighting door complete for LogWIN Premium 360-505	0	9999999999999
170	045419	Ash pan LWP18-50, LWK	0	9999999999999
190	046349	Ash door complete for LogWIN Premium 360-505	0	9999999999999
200	042743	Holder for cleaning equipments for VarioWIN, LogWIN Premium 180-505,SilvaWIN,BioWIN XL35-60,EasWIN Klassik/Premium 180	0	9999999999999
210	033433	Eyebolt similar to DIN 444 - B M12x50 - 4.6 - bright for VarioWIN, FireWIN,EasyWIN Klassik/Premium 180,LogWIN Premium 180-505	0	9999999999999
220	045715	Cover for cladding door switch for LogWIN Premium 360-505	0	9999999999999
230	007407	Rear combustion chamber stone for LogWIN Premium 360-505	0	9999999999999
240	007382	Combustion chamber stone left/right for LogWIN Premium 180-505	0	9999999999999
250	007408	Bottom rear combustion chamber stone for LogWIN Premium 360-505	0	9999999999999
260	007409	Bottom front combustion chamber stone for LogWIN Premium 360-505	0	9999999999999
270	045820	Door switch clip LWP / LWK	0	9999999999999
280	046336	Blower wheel cover for LogWIN Premium 180-505	0	9999999999999
290	045712	Rear cover for LogWIN Premium 360-505	0	9999999999999
300	045708	Control panel cover for LogWIN Premium 360-505	0	9999999999999
310	045883	Door cover for LogWIN Premium 360-505	0	9999999999999
320	046339	Cover lock for LogWIN Premium 180-505	0	9999999999999
330	046120	Rope seal kit for burning stones for LogWIN Premium 360-505	0	9999999999999
340	007415	Seal for secondary air nozzle 142x52x3mm for LogWIN Premium 360-505	0	9999999999999
350	046267	Lighting door seal LWP18-50, LW	0	9999999999999
360	046268	Ash door seal LWP18-50, LWK	0	9999999999999
370	016136	ZH-099 Thermocontrol sensor seal (Klingerit) 1/4" (24x17x2mm) No.S56155 for LogWIN Premium 180-505	0	9999999999999
380	046265	Cleaning cover seal for LogWIN Premium 360-505	0	9999999999999
390	009378	Seal for vent cover LWP18-50, LWK	0	9999999999999
400	046266	Heating door seal set (16x10x1730 + 16x10x435mm) for LogWIN Premium 180-505	0	9999999999999
410	013807	Blower motor spacer for LogWIN Premium 180-505	0	9999999999999
420	045431	Hook-in plate for LogWIN Premium 180-505	0	9999999999999
430	045737	Rear hook-in plate for LogWIN Premium 360-505	0	9999999999999
440	016224	Plastic fibre 1000 Kerathin P /cartouches for HMX, LogWIN Premium 180-505 (*not illustrated)	0	9999999999999
450	046644	InfoWIN ribbon cable	0	9999999999999
460	045459	Air control flange for LogWIN Premium 180-505	0	9999999999999
470	009305	Flange seal LWP18-50, LWK	0	9999999999999
480	007649	Radio interference filter LWP18-50, LWK	0	9999999999999
490	043441	Blower wheel Ø170mm for HMX, SilvaWIN, LogWIN Premium 180-505	0	9999999999999
500	046311	Housing foot InfoWIN cpl. with fastening material for LogWIN Premium 180-505,BioWIN 10-26,SWK-T,BioWIN XL 35-60	0	9999999999999
510	045746	Handle for cleaning heating surfaces for LogWIN Premium 360-505	0	9999999999999
520	002050	Power supply unit 002049 holding plate for VarioWIN, FireWIN, BioWIN 10-26, BioWIN XL 35-60, LogWIN Premium 180-505	0	9999999999999
530	046040	Holder for left vertical grate for LogWIN Premium 180-505	0	9999999999999
540	045347	Holder for right vertical grate for LogWIN Premium 180-505	0	9999999999999

Item no.	Article no.	Description	Serialnumber from	Serialnumber t
550	048811	Boiler handle	0	9999999999999
570	046344	Heating door complete for LogWIN Premium 360-505	0	9999999999999
580	011985	InfoWINplus HW C4 SW V4.10 BioWIN, LWP, JetWIN, EcoWIN	0	9999999999999
590	007094	Lambda sensor insulating ring for LogWIN Premium 180-505	0	9999999999999
600	007403	Rear insulating stone for LogWIN Premium 360-505	0	9999999999999
610	007379	Insulating stone left/right for LogWIN Premium 180-505	0	9999999999999
620	007405	Bottom insulating stone	0	9999999999999
630	007091	Ash door insulation 415x279x38 KM1260/128 for LogWIN Premium 180-505	0	9999999999999
640	011096	Smoke pipe insulation 210X200X30 for LogWIN premium 180-505	0	9999999999999
650	011105	Control panel insulation (580x604x50) for LogWIN Premium 360-505	0	9999999999999
660	002059	Power supply cable (not illustrated)	0	9999999999999
665	004385	KFE cock	0	9999999999999
670	009928	Terminal bar	0	9999999999999
680	007330	Condenser for motor MAB 500V, 3µF for HMX,PMX,SWK,BioWIN10-26,FireWIN,VarioWIN,BioWIN XL 35-60, EasyWIN Premium 180,LogWIN Premiu	0	9999999999999
690	007124	Bearing, left for cleaning heating surfaces for LogWIN, EasyWIN Klassik/Premium 180,LogWIN Premium 180-505	0	9999999999999
710	051646	Lambda sensor	0	9999999999999
720	040032	Air choke	0	9999999999999
730	045460	Air control, complete	0	9999999999999
740	046338	Vent cover	0	9999999999999
750	001760	Magnetic lock, black - VW, LWP18-50, LWK	0	9999999999999
760	009277	Air control microswitch	0	9999999999999
770	046001	Module connection PCB for LogWIN Premium 180-505	0	9999999999999
780	045709	Module flap for LogWIN Premium 180-505	0	9999999999999
790	044158	Blower motor with cable for blower for SilvaWIN, LogWIN, FireWIN, BioWIN XL 35-60, EasyWIN Premium 180, LogWIN Premium 180-505	0	9999999999999
800	016624	Nut DIN 934 - M12 - 8 - galvanised for VarioWIN, FireWIN, EasyWIN Klassik/Premium 180, LogWIN Premium 180-505	0	9999999999999
810	041430	Mains connection socket 3-pin for MIRA,ETX,PMX,BioWIN10-26,LogWIN Premium 180-505,EasyWIN Premium 180,BioWIN XL 35-60, FireWIN	0	9999999999999
820	051645	Power supply unit 12V	0	9999999999999
830	045361	Ash door rivet bracket for LogWIN Premium 180-505	0	9999999999999
835	046644	InfoWIN ribbon cable	0	9999999999999
840	011999	FMF PCB for LogWIN Premium 180-505	0	9999999999999
850	046332	Cleaning cover for LogWIN Premium 360-505	0	9999999999999
860	046351	Cleaning cover complete for LogWIN Premium 360-505	0	9999999999999
870	003088	GWX992 Cleaning brush 950x45mm/45x70 mm for GWX, LogWIN Premium 180-505, EasyWIN Klassik/Premium 180	0	9999999999999
880	040328	Cleaning rake for HMX,PMX, EasyWIN Klassik/Premium 180, LogWIN Premium 180-505	0	9999999999999
890	046326	Top cleaning profile for LogWIN Premium 360-505	0	9999999999999
900	046324	Bottom cleaning profile for LogWIN Premium 360-505	0	9999999999999
910	046322	Cleaning auger for LogWIN Premium 180-505	0	9999999999999
920	046305	Rear panel top for LogWIN Premium 360-505	0	9999999999999
930	046307	Rear panel bottom for LogWIN Premium 360-505	0	9999999999999
940	045607	LWP03 SWITCH COVER	0	9999999999999
950	045695	Control panel cover for LogWIN Premium 180-505	0	9999999999999
960	007103	Cladding door hinge for LogWIN Premium 180-505, VarioWIN, BioWIN XL 35-60	0	9999999999999
970	045685	Top hinge bracket for LogWIN Premium 180-505	0	9999999999999
980	045072	Bottom hinge bracket for LogWIN Premium 180-505	0	9999999999999
985	004386	Hose grommet, union nut and seal for KFE ball valve for BioWIN 10-26, BioWIN XL 35-60,LogWIN Premium 180-505	0	9999999999999
990	006756	Screw M6 for heating surface cleaning for PMX,BioWIN 10-26,FireWIN, BioWIN XL 35-60, LogWIN Premium 180-505	0	9999999999999
1000	045360	Lighting door protection plate for LogWIN Premium 180-505	0	9999999999999
1010	046321	Heating door protection plate for LogWIN Premium 180-505	0	9999999999999
1020	046334	Cleaning cover protection plate for LogWIN Premium 360-505	0	9999999999999
1030	044354	Thermocontrol sensor protective tube for SilvaWIN, LogWIN Premium 180-505	0	9999999999999
1040	045400	Carburisation gas duct for LogWIN Premium 360-505	0	9999999999999

Item no.	Article no.	Description	Serialnumber from	Serialnumber t
1050	046300	Side panel left for LogWIN Premium 180-505	0	9999999999999
1060	046303	Side panel right for LogWIN Premium 180-505	0	9999999999999
1070	045640	Secondary air nozzle complete for LogWIN Premium 360-505	0	9999999999999
1075	031096	Countersinking screw M4x20 DIN965 gv KS (not illustrated)	0	9999999999999
1080	009192	OEM0552 2A fuse, 5x20 glass tube Typ 179120 for OEK/M,LogWIN Premium 180-505 *not illustrated	0	9999999999999
1090	003228	6.3A fuse (not illustrated)	0	9999999999999
1100	003663	Fuse holder	0	9999999999999
1110	009540	Spatula	0	9999999999999
1120	009318	Plug ST18/3S sw wie for LogWIN Premium 180-505	0	9999999999999
1130	045718	Plug holder for LogWIN Premium 180-505	0	9999999999999
1140	051162	Vertical grate LWK/LWP	0	9999999999999
1150	009994	Foot M12X40 JTB38 for HMX, EasyWIN Klassik/Premium 180, LogWIN Premium 180-505	0	9999999999999
1155	007453	Leg extension for LogWIN Premium 180-505, EasyWIN Klassik/Premium 180	0	9999999999999
1160	040429	Servomotor for HMX, SilvaWIN, LogWIN Premium 180-505	0	9999999999999
1170	005125	Star handle M12 x 35	0	9999999999999
1180	080664	FAX192 Poker for FAX,HMX,SilvaWIN,FKX,EasyWIN Klassik/Premium 180,LogWIN Premium 180-505	0	9999999999999
1190	007626	Thermocouple	0	9999999999999
1200	046451	Safety thermostat LS1+100/-6, Auger for FireWIN, BioWIN 10-26, BioWIN XL 35-60	0	9999999999999
1210	007096	Transformer for O2 sensor 18VA for LogWIN Premium 180-505	0	9999999999999
1220	004418	Grommet Ø46,5 for: - quick vent and piping XENTA - piping GENIO/MultiWIN10-28 - handle heating surface cleaning LogWIN - EasyWIN	0	9999999999999
1230	033104	Door mounting bolt ISO 2341-A - 12x32	0	9999999999999
1240	007128	Microswitch Z-15GQ-B for LogWIN Premium 180-505, BioWIN XL 35-60	0	9999999999999
1250	046072	Door switch complete for LogWIN Premium 180-505	0	9999999999999
1260	007088	Door stone for lighting door (402x126x50mm) for LogWIN Premium 180-505	0	9999999999999
1270	007089	Door stone for ash door (273x206x40mm) for LogWIN Premium 180-505	0	9999999999999
1280	007087	Door stone for heating door (407x378x40mm) for LogWIN Premium 180-505	0	9999999999999
1290	007130	Door stone for cleaning cover for LogWIN Premium 360-505	0	9999999999999
1300	046309	Cladding door complete for LogWIN Premium 360-505	0	9999999999999
1310	043426	Locking bracket for heating door / ash door for SilvaWIN,LogWIN Premium 180-505, BioWIN XL 35-60, EasyWIN Klassik/Premium 180	0	9999999999999
1320	046111	Reinforcement bracket for LogWIN Premium 360-505	0	9999999999999
1330	007095	Extra PCB for O2-mesure or pumping rotation speed control for BioWIN cascade, LogWIN Premium 180-505	0	9999999999999
1340	020117	Cylinder-head screw, hexagon socket ISO 4762 - M12x25 - 8.8 - galva. (DIN 912) for VarioWIN, FireWIN, BioWIN10-26, LogWIN Premium	0	9999999999999

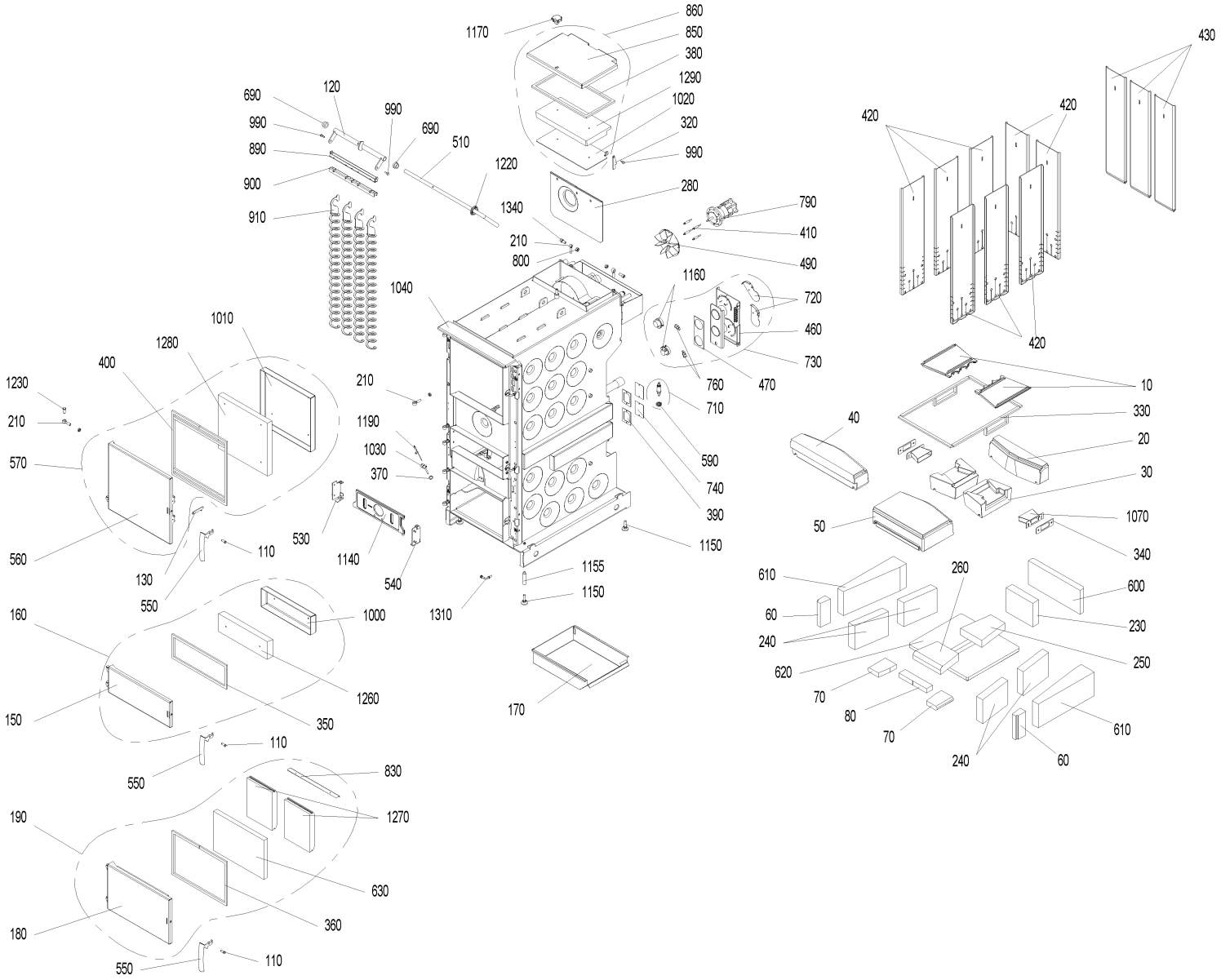
1170
860
850
380
1290
1020
320
990
690
120
990
690
990
890
900
910
510
1220
280
1340
210
800
790
410
490
1160
720
460
730
760
470
710
590
740
390
1150
1155
1150
1310
1040
1010
1280
400
1230
210
570
560
130
550
110
530
1140
540
1190
1030
370
210
1000
1260
350
160
150
110
550
830
1270
630
360
190
180
110
550
170
430
420
420
420
10
330
20
30
1070
340
40
50
610
60
240
620
70
80
70
240
260
600
230
250
610
60

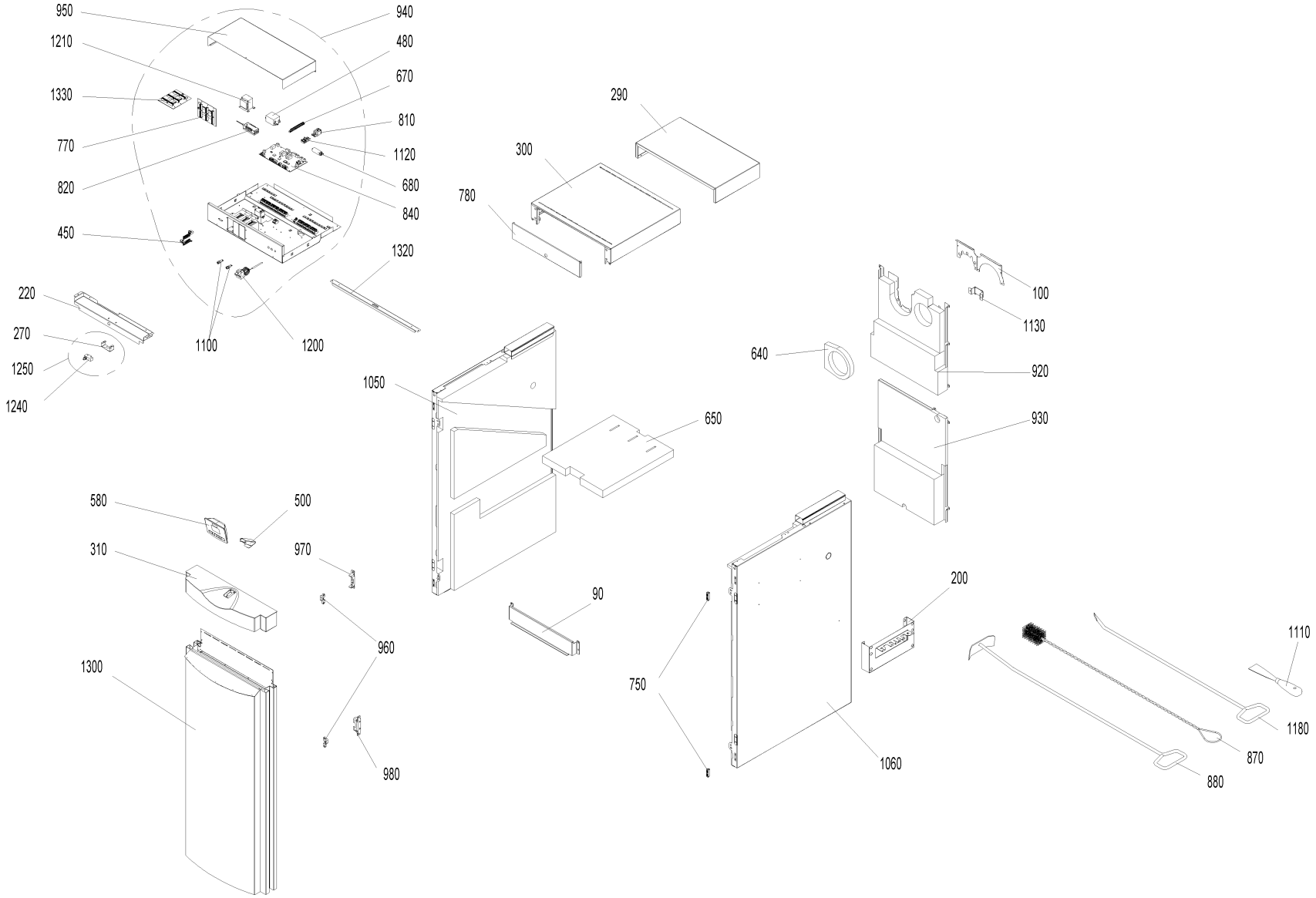
950
940
1210
480
670
1330
810
770
1120
820
680
840
450
1320
220
270
1250
1240
1100
1200
290
300
780
100
1130
640
920
930
1050
650
90
580
500
310
970
960
1300
980
200
750
1060
1110
1180
870
880

Item no.	Article no.	Description	Serialnumber from	Serialnumber t
10	007414	Burning plate for LogWIN Premium 360-505	0	9999999999999
20	007401	Rear burning stone for LogWIN Premium 360-505	0	9999999999999
30	007400	Burning stone left/right for LogWIN Premium 360-505	0	9999999999999
40	007399	Centre burning stone for LogWIN Premium 360-505	0	9999999999999
50	007398	Front burning stone for LogWIN Premium 360-505	0	9999999999999
70	007412	Cover stone front left/right for LogWIN Premium 180-505	0	9999999999999
80	007419	Cover stone front centre for LogWIN Premium 360-505	0	9999999999999
90	045691	Thermocontrol sensor cover for LogWIN Premium 360-505	0	9999999999999
100	045635	Blower motor cover for LogWIN Premium 180-505	0	9999999999999
110	013806	Axle for door handle for LogWIN Premium 180-505, BioWIN XL 35-60,EasyWIN Klassik/Premium 180	0	9999999999999
120	046330	Axle for cleaning heating surfaces for LogWIn Premium 360-505	0	9999999999999
130	046104	Safety hook for LogWIN Premium 180-505	0	9999999999999
140	046315	Door handle stopper for LogWIN Premium 180-505	0	9999999999999
160	046347	Lighting door complete for LogWIN Premium 360-505	0	9999999999999
170	045419	Ash pan LWP18-50, LWK	0	9999999999999
190	046349	Ash door complete for LogWIN Premium 360-505	0	9999999999999
200	042743	Holder for cleaning equipments for VarioWIN, LogWIN Premium 180-505,SilvaWIN,BioWIN XL35-60,EasWIN Klassik/Premium 180	0	9999999999999
210	033433	Eyebolt similar to DIN 444 - B M12x50 - 4.6 - bright for VarioWIN, FireWIN,EasyWIN Klassik/Premium 180,LogWIN Premium 180-505	0	9999999999999
220	045715	Cover for cladding door switch for LogWIN Premium 360-505	0	9999999999999
230	007407	Rear combustion chamber stone for LogWIN Premium 360-505	0	9999999999999
240	007382	Combustion chamber stone left/right for LogWIN Premium 180-505	0	9999999999999
250	007408	Bottom rear combustion chamber stone for LogWIN Premium 360-505	0	9999999999999
260	007409	Bottom front combustion chamber stone for LogWIN Premium 360-505	0	9999999999999
270	045820	Door switch clip LWP / LWK	0	9999999999999
280	046336	Blower wheel cover for LogWIN Premium 180-505	0	9999999999999
290	045712	Rear cover for LogWIN Premium 360-505	0	9999999999999
300	045708	Control panel cover for LogWIN Premium 360-505	0	9999999999999
310	045883	Door cover for LogWIN Premium 360-505	0	9999999999999
320	046339	Cover lock for LogWIN Premium 180-505	0	9999999999999
330	046120	Rope seal kit for burning stones for LogWIN Premium 360-505	0	9999999999999
340	007415	Seal for secondary air nozzle 142x52x3mm for LogWIN Premium 360-505	0	9999999999999
350	046267	Lighting door seal LWP18-50, LW	0	9999999999999
360	046268	Ash door seal LWP18-50, LWK	0	9999999999999
370	016136	ZH-099 Thermocontrol sensor seal (Klingerit) 1/4" (24x17x2mm) No.S56155 for LogWIN Premium 180-505	0	9999999999999
380	046265	Cleaning cover seal for LogWIN Premium 360-505	0	9999999999999
390	009378	Seal for vent cover LWP18-50, LWK	0	9999999999999
400	046266	Heating door seal set (16x10x1730 + 16x10x435mm) for LogWIN Premium 180-505	0	9999999999999
410	013807	Blower motor spacer for LogWIN Premium 180-505	0	9999999999999
420	045431	Hook-in plate for LogWIN Premium 180-505	0	9999999999999
430	045737	Rear hook-in plate for LogWIN Premium 360-505	0	9999999999999
440	016224	Plastic fibre 1000 Kerathin P /cartouches for HMX, LogWIN Premium 180-505 (*not illustrated)	0	9999999999999
450	046644	InfoWIN ribbon cable	0	9999999999999
460	045459	Air control flange for LogWIN Premium 180-505	0	9999999999999
470	009305	Flange seal LWP18-50, LWK	0	9999999999999
480	007649	Radio interference filter LWP18-50, LWK	0	9999999999999
490	043441	Blower wheel Ø170mm for HMX, SilvaWIN, LogWIN Premium 180-505	0	9999999999999
500	046311	Housing foot InfoWIN cpl. with fastening material for LogWIN Premium 180-505,BioWIN 10-26,SWK-T,BioWIN XL 35-60	0	9999999999999
510	045746	Handle for cleaning heating surfaces for LogWIN Premium 360-505	0	9999999999999
520	002050	Power supply unit 002049 holding plate for VarioWIN, FireWIN, BioWIN 10-26, BioWIN XL 35-60, LogWIN Premium 180-505	0	9999999999999
530	046040	Holder for left vertical grate for LogWIN Premium 180-505	0	9999999999999
540	045347	Holder for right vertical grate for LogWIN Premium 180-505	0	9999999999999

Item no.	Article no.	Description	Serialnumber from	Serialnumber t
550	048811	Boiler handle	0	9999999999999
570	046344	Heating door complete for LogWIN Premium 360-505	0	9999999999999
580	011985	InfoWINplus HW C4 SW V4.10 BioWIN, LWP, JetWIN, EcoWIN	0	9999999999999
590	007094	Lambda sensor insulating ring for LogWIN Premium 180-505	0	9999999999999
600	007403	Rear insulating stone for LogWIN Premium 360-505	0	9999999999999
610	007379	Insulating stone left/right for LogWIN Premium 180-505	0	9999999999999
620	007405	Bottom insulating stone	0	9999999999999
630	007091	Ash door insulation 415x279x38 KM1260/128 for LogWIN Premium 180-505	0	9999999999999
640	011096	Smoke pipe insulation 210X200X30 for LogWIN premium 180-505	0	9999999999999
650	011105	Control panel insulation (580x604x50) for LogWIN Premium 360-505	0	9999999999999
660	002059	Power supply cable (not illustrated)	0	9999999999999
665	004385	KFE cock	0	9999999999999
670	009928	Terminal bar	0	9999999999999
680	007330	Condenser for motor MAB 500V, 3µF for HMX,PMX,SWK,BioWIN10-26,FireWIN,VarioWIN,BioWIN XL 35-60, EasyWIN Premium 180,LogWIN Premiu	0	9999999999999
690	007124	Bearing, left for cleaning heating surfaces for LogWIN, EasyWIN Klassik/Premium 180,LogWIN Premium 180-505	0	9999999999999
710	051646	Lambda sensor	0	9999999999999
720	040032	Air choke	0	9999999999999
730	045460	Air control, complete	0	9999999999999
740	046338	Vent cover	0	9999999999999
750	001760	Magnetic lock, black - VW, LWP18-50, LWK	0	9999999999999
760	009277	Air control microswitch	0	9999999999999
770	046001	Module connection PCB for LogWIN Premium 180-505	0	9999999999999
780	045709	Module flap for LogWIN Premium 180-505	0	9999999999999
790	044158	Blower motor with cable for blower for SilvaWIN, LogWIN, FireWIN, BioWIN XL 35-60, EasyWIN Premium 180, LogWIN Premium 180-505	0	9999999999999
800	016624	Nut DIN 934 - M12 - 8 - galvanised for VarioWIN, FireWIN, EasyWIN Klassik/Premium 180, LogWIN Premium 180-505	0	9999999999999
810	041430	Mains connection socket 3-pin for MIRA,ETX,PMX,BioWIN10-26,LogWIN Premium 180-505,EasyWIN Premium 180,BioWIN XL 35-60, FireWIN	0	9999999999999
820	051645	Power supply unit 12V	0	9999999999999
830	045361	Ash door rivet bracket for LogWIN Premium 180-505	0	9999999999999
835	046644	InfoWIN ribbon cable	0	9999999999999
840	011999	FMF PCB for LogWIN Premium 180-505	0	9999999999999
850	046332	Cleaning cover for LogWIN Premium 360-505	0	9999999999999
860	046351	Cleaning cover complete for LogWIN Premium 360-505	0	9999999999999
870	003088	GWX992 Cleaning brush 950x45mm/45x70 mm for GWX, LogWIN Premium 180-505, EasyWIN Klassik/Premium 180	0	9999999999999
880	040328	Cleaning rake for HMX,PMX, EasyWIN Klassik/Premium 180, LogWIN Premium 180-505	0	9999999999999
890	046326	Top cleaning profile for LogWIN Premium 360-505	0	9999999999999
900	046324	Bottom cleaning profile for LogWIN Premium 360-505	0	9999999999999
910	046322	Cleaning auger for LogWIN Premium 180-505	0	9999999999999
920	046305	Rear panel top for LogWIN Premium 360-505	0	9999999999999
930	046307	Rear panel bottom for LogWIN Premium 360-505	0	9999999999999
940	045607	LWP03 SWITCH COVER	0	9999999999999
950	045695	Control panel cover for LogWIN Premium 180-505	0	9999999999999
960	007103	Cladding door hinge for LogWIN Premium 180-505, VarioWIN, BioWIN XL 35-60	0	9999999999999
970	045685	Top hinge bracket for LogWIN Premium 180-505	0	9999999999999
980	045072	Bottom hinge bracket for LogWIN Premium 180-505	0	9999999999999
985	004386	Hose grommet, union nut and seal for KFE ball valve for BioWIN 10-26, BioWIN XL 35-60,LogWIN Premium 180-505	0	9999999999999
990	006756	Screw M6 for heating surface cleaning for PMX,BioWIN 10-26,FireWIN, BioWIN XL 35-60, LogWIN Premium 180-505	0	9999999999999
1000	045360	Lighting door protection plate for LogWIN Premium 180-505	0	9999999999999
1010	046321	Heating door protection plate for LogWIN Premium 180-505	0	9999999999999
1020	046334	Cleaning cover protection plate for LogWIN Premium 360-505	0	9999999999999
1030	044354	Thermocontrol sensor protective tube for SilvaWIN, LogWIN Premium 180-505	0	9999999999999
1040	045400	Carburisation gas duct for LogWIN Premium 360-505	0	9999999999999

Item no.	Article no.	Description	Serialnumber from	Serialnumber t
1050	046300	Side panel left for LogWIN Premium 180-505	0	9999999999999
1060	046303	Side panel right for LogWIN Premium 180-505	0	9999999999999
1070	045640	Secondary air nozzle complete for LogWIN Premium 360-505	0	9999999999999
1075	031096	Countersinking screw M4x20 DIN965 gv KS (not illustrated)	0	9999999999999
1080	009192	OEM0552 2A fuse, 5x20 glass tube Typ 179120 for OEK/M,LogWIN Premium 180-505 *not illustrated	0	9999999999999
1090	003228	6.3A fuse (not illustrated)	0	9999999999999
1100	003663	Fuse holder	0	9999999999999
1110	009540	Spatula	0	9999999999999
1120	009318	Plug ST18/3S sw wie for LogWIN Premium 180-505	0	9999999999999
1130	045718	Plug holder for LogWIN Premium 180-505	0	9999999999999
1140	051162	Vertical grate LWK/LWP	0	9999999999999
1150	009994	Foot M12X40 JTB38 for HMX, EasyWIN Klassik/Premium 180, LogWIN Premium 180-505	0	9999999999999
1155	007453	Leg extension for LogWIN Premium 180-505, EasyWIN Klassik/Premium 180	0	9999999999999
1160	040429	Servomotor for HMX, SilvaWIN, LogWIN Premium 180-505	0	9999999999999
1170	005125	Star handle M12 x 35	0	9999999999999
1180	080664	FAX192 Poker for FAX,HMX,SilvaWIN,FKX,EasyWIN Klassik/Premium 180,LogWIN Premium 180-505	0	9999999999999
1190	007626	Thermocouple	0	9999999999999
1200	046451	Safety thermostat LS1+100/-6, Auger for FireWIN, BioWIN 10-26, BioWIN XL 35-60	0	9999999999999
1210	007096	Transformer for O2 sensor 18VA for LogWIN Premium 180-505	0	9999999999999
1220	004418	Grommet Ø46,5 for: - quick vent and piping XENTA - piping GENIO/MultiWIN10-28 - handle heating surface cleaning LogWIN - EasyWIN	0	9999999999999
1230	033104	Door mounting bolt ISO 2341-A - 12x32	0	9999999999999
1240	007128	Microswitch Z-15GQ-B for LogWIN Premium 180-505, BioWIN XL 35-60	0	9999999999999
1250	046072	Door switch complete for LogWIN Premium 180-505	0	9999999999999
1260	007088	Door stone for lighting door (402x126x50mm) for LogWIN Premium 180-505	0	9999999999999
1270	007089	Door stone for ash door (273x206x40mm) for LogWIN Premium 180-505	0	9999999999999
1280	007087	Door stone for heating door (407x378x40mm) for LogWIN Premium 180-505	0	9999999999999
1290	007130	Door stone for cleaning cover for LogWIN Premium 360-505	0	9999999999999
1300	046309	Cladding door complete for LogWIN Premium 360-505	0	9999999999999
1310	043426	Locking bracket for heating door / ash door for SilvaWIN,LogWIN Premium 180-505, BioWIN XL 35-60, EasyWIN Klassik/Premium 180	0	9999999999999
1320	046111	Reinforcement bracket for LogWIN Premium 360-505	0	9999999999999
1330	007095	Extra PCB for O2-mesure or pumping rotation speed control for BioWIN cascade, LogWIN Premium 180-505	0	9999999999999
1340	020117	Cylinder-head screw, hexagon socket ISO 4762 - M12x25 - 8.8 - galva. (DIN 912) for VarioWIN, FireWIN, BioWIN10-26, LogWIN Premium	0	9999999999999

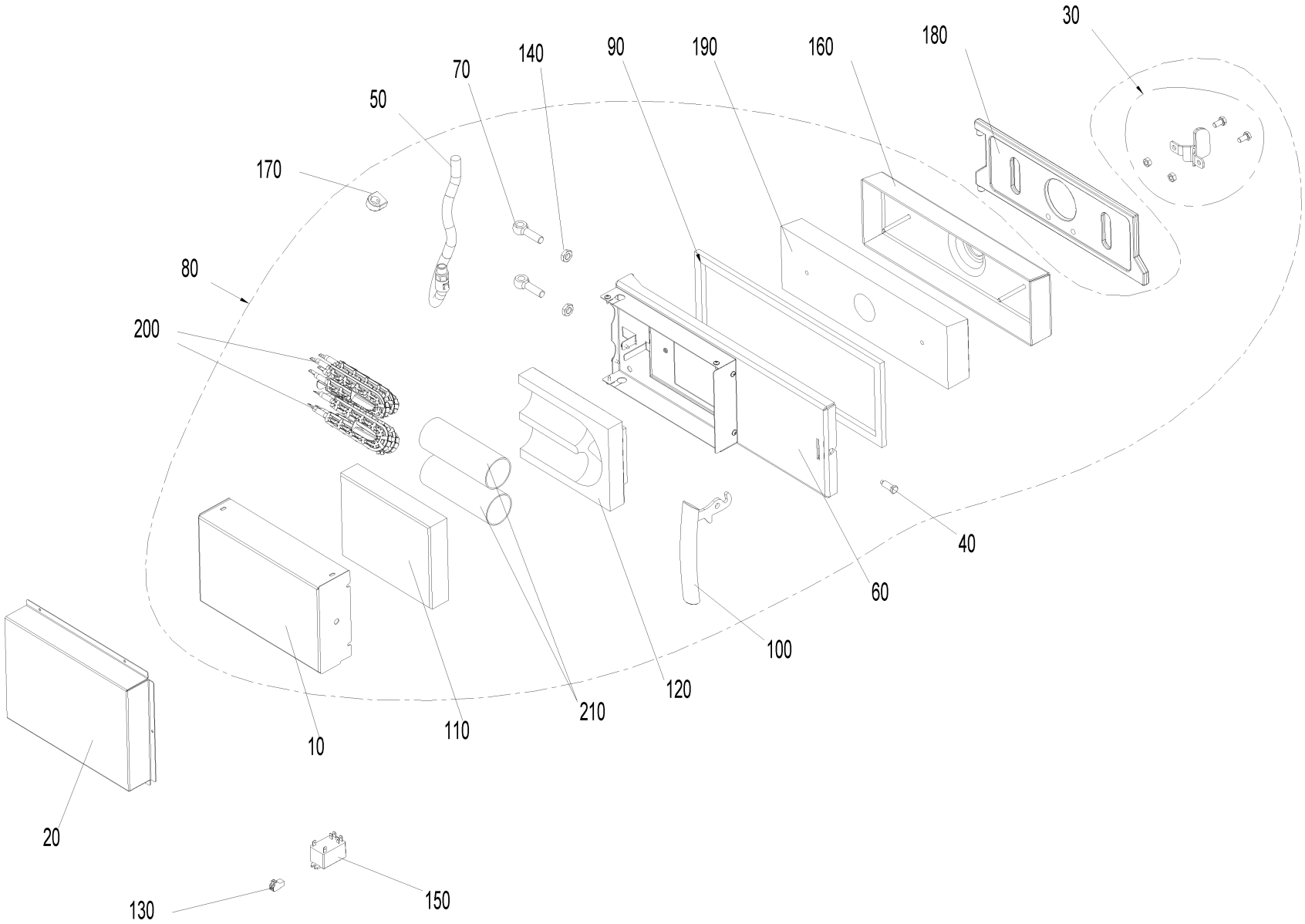
30
180
160
190
90
140
70
50
170
80
200
40
60
100
120
210
110
10
20
130
150

Item no.	Article no.	Description	Serialnumber from	Serialnumber to
10	048412	Cover for ignition LWP18-50	0	99999999999999999
20	048930	Cladding door cover for ignition	0	99999999999999999
30	050597	Fender cpl. for ignition LWP18-50, LWK	0	99999999999999999
40	013806	Axle for door handle for LogWIN Premium 180-505, BioWIN XL 35-60,EasyWIN Klassik/Premium 180	0	99999999999999999
50	048939	Cable - Ignition element LWP	0	99999999999999999
60	048418	Lighting door for ignition LWP180 - 305	0	99999999999999999
60	048936	Lighting door for ignition LWP 360-505	0	99999999999999999
70	033433	Eyebolt similar to DIN 444 - B M12x50 - 4.6 - bright for VarioWIN, FireWIN,EasyWIN Klassik/Premium 180,LogWIN Premium 180-505	0	99999999999999999
80	503590	LWPAZ3 Automatic ignition cpl. LWP18-30	0	99999999999999999
80	503591	LWPAZ5 Automatic ignition cpl. LWP36-50	0	99999999999999999
90	046267	Lighting door seal LWP18-50, LW	0	99999999999999999
100	048811	Boiler handle	0	99999999999999999
110	007484	Insulating stone top for automatic ignition LWP18-50, LWK	0	99999999999999999
120	007483	Bottom insulating stone for automatic ignition LWP18-50, LWK	0	99999999999999999
130	006822	LP-Clip RAST 5 8105 B/2 C1 MB SB	0	99999999999999999
140	033097	Nut (low) DIN 439 - B M12 - 04 - galvanised	0	99999999999999999
150	005025	Power relay OMRON G7L-2A-BUB 200/240AC for PMX,BioWIN XL, BioWIN10-26,FireWIN,VarioWIN, BioWIN XL 35-60	0	99999999999999999
160	048420	Protection plate for ignition LWP18-50	0	99999999999999999
170	050599	Protective tube clip for ignition LWP18-50	0	99999999999999999
180	051162	Vertical grate LWK/LWP	0	99999999999999999
190	007482	Door stone for ignition LWP18-50	0	99999999999999999
200	055201	Ignition element BioWIN10-26, FireWIN from lot 15, VarioWIN from lot 15 BioWIN XL, LWK	0	99999999999999999
210	050489	Ignition tube LWP18-50, LWK	0	99999999999999999

Boiler (A000136)

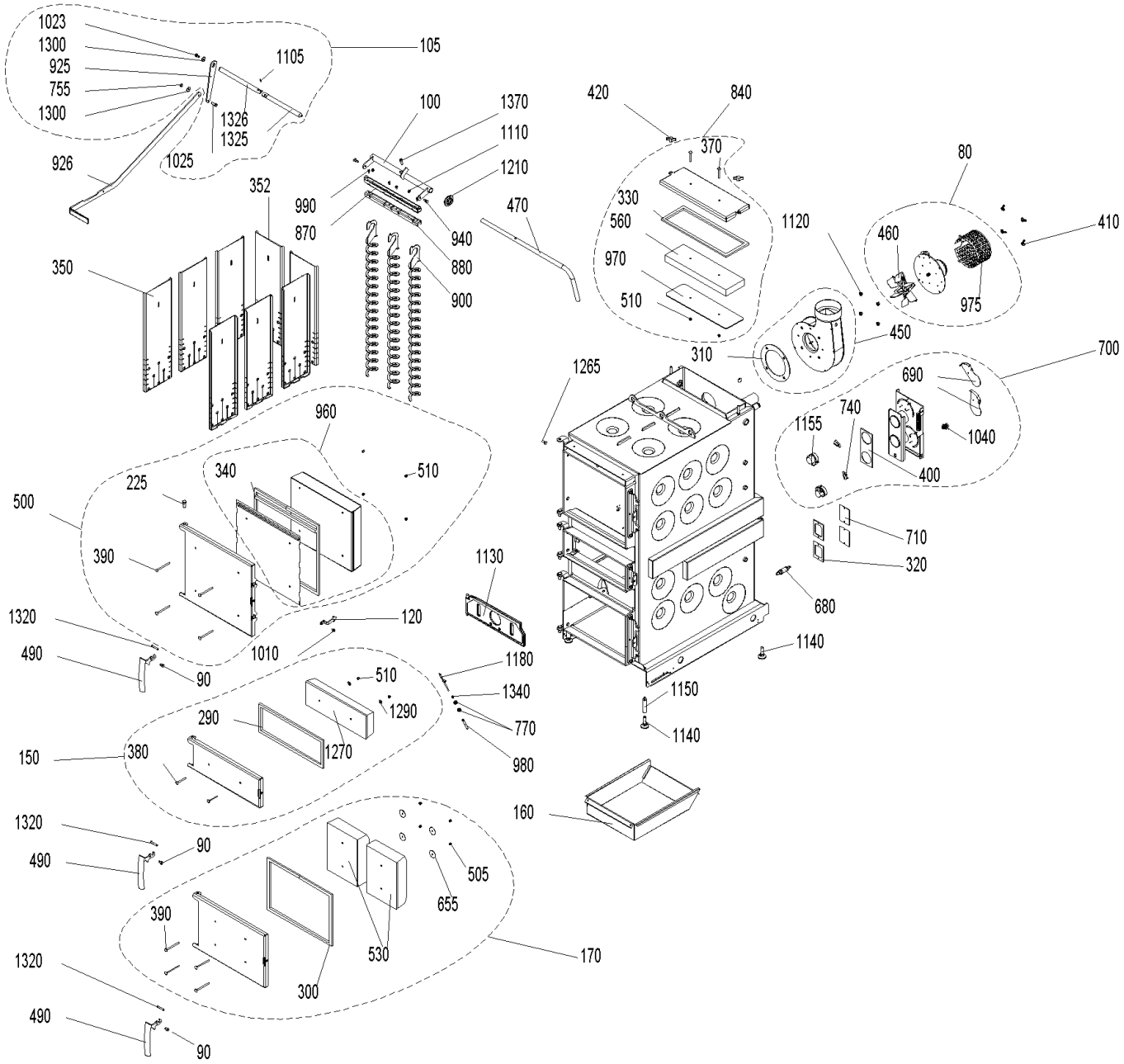

Boiler (A000136)

Item no.	Article no.	Description	Quantity	Unit
80	051661	Flue gas blower, complete for LWK	1.00	pcs
90	048881	Axle for door handle CK45	2.00	pcs
100	046328	Axle for cleaning heating surfaces	1.00	pcs
120	052728	de: Anlüftsicherungshaken rot LWPT	1.00	pcs
150	051564	Lighting door, complete	1.00	pcs
160	045419	Ash pan LWP18-50, LWK	1.00	pcs
170	051563	Ash door, complete LWK	1.00	pcs
225	033104	Door mounting bolt ISO 2341-A - 12x32	1.00	pcs
290	046267	Lighting door seal LWP18-50, LW	1.00	pcs
300	046268	Ash door seal LWP18-50, LWK	1.00	pcs
310	050825	Blower seal LWK	1.00	pcs
320	009378	Seal for vent cover LWP18-50, LWK	4.00	pcs
330	051567	Seal for cleaning cover LWK	1.00	pcs
340	051568	Heating door seal set LWK	1.00	pcs
350	045431	Hook-in plate for LogWIN Premium 180-505	8.00	pcs
352	045431	Hook-in plate for LogWIN Premium 180-505	8.00	pcs
370	016178	Round-head screw M6x55	2.00	pcs
380	016186	Round-head screw M6x60	2.00	pcs
390	016190	Round-head screw M6x90	4.00	pcs
400	009305	Flange seal LWP18-50, LWK	1.00	pcs
410	019410	Wing nut M6	4.00	pcs
420	007366	Wing nut M8	2.00	pcs

Boiler (A000136)

Item no.	Article no.	Description	Quantity	Unit
450	051577	Blower box, complete LWK	1.00	pcs
460	053032	Blower wheel	1.00	pcs
470	045447	Handle for cleaning heating surfaces for LogWIN Premium 180-305	1.00	pcs
490	048811	Boiler handle	3.00	pcs
500	051579	Heating door, complete LWK	1.00	pcs
505	016192	Cap nut	4.00	pcs
510	025968	Cap nut M6	1.00	pcs
530	050585	Insulating stone AT LWK	2.00	pcs
560	050542	Insulating stone for cleaning cover LWK	1.00	pcs
655	016191	Washer M6 4x40x1,5	4.00	pcs
680	051646	Lambda sensor	1.00	pcs
690	040032	Air choke	2.00	pcs
700	054194	de: Luftregler kpl. mont. LWPT	1.00	pcs
710	046338	Vent cover	4.00	pcs
740	009277	Air control microswitch	2.00	pcs
770	031156	Hexagon nut M10 DIN 439	2.00	pcs
840	051663	Cleaning cover LWK	1.00	pcs
870	046325	Top cleaning profile for LogWIN Premium 180-305	1.00	pcs
880	046323	Bottom cleaning profile for LogWIN Premium 180-305	1.00	pcs
900	046322	Cleaning auger for LogWIN Premium 180-505	4.00	pcs
940	006756	Screw M6 for heating surface cleaning for PMX,BioWIN 10-26,FireWIN, BioWIN XL 35-60, LogWIN Premium 180-505	2.00	pcs
960	053240	Heating door protection plate LWK	1.00	pcs

Boiler (A000136)

Item no.	Article no.	Description	Quantity	Unit
970	051666	Cleaning cover protection plate LWK	1.00	pcs
975	010882	Flue gas blower protection hood LWK	1.00	pcs
980	051231	Thermocontrol sensor protective tube LWK	1.00	pcs
990	031545	Hexagon screw M5x12 DIN 7500 (not ilustrated)	1.00	pcs
1010	051671	Door screw M8	1.00	pcs
1040	017205	Hexagon screws M12x25-8.8	1.00	pcs
1110	016566	Hexagon nut with flange and gearing M6	1.00	pcs
1120	016553	Hexagon nut M8 with flange and gearing	4.00	pcs
1130	051162	Vertical grate LWK/LWP	1.00	pcs
1140	009994	Foot M12X40 JTB38 for HMX, EasyWIN Klassik/Premium 180, LogWIN Premium 180-505	4.00	pcs
1150	007453	Leg extension for LogWIN Premium 180-505, EasyWIN Klassik/Premium 180	2.00	pcs
1155	040429	Servomotor for HMX, SilvaWIN, LogWIN Premium 180-505	2.00	pcs
1180	007626	Thermocouple	1.00	pcs
1210	048812	Grommet for EasyWIN, LogWIN Premium 180-505	1.00	pcs
1265	051671	Door screw M8	1.00	pcs
1270	050590	Door stone for lighting door LWK	1.00	pcs
1290	031753	Disc 6 ISO 7093	1.00	pcs
1320	050568	Locking axle LWK	3.00	pcs
1340	007164	Tension spring	1.00	pcs
1370	017046	Cyl. screw M 8X30	1.00	pcs

Cladding (A000138)

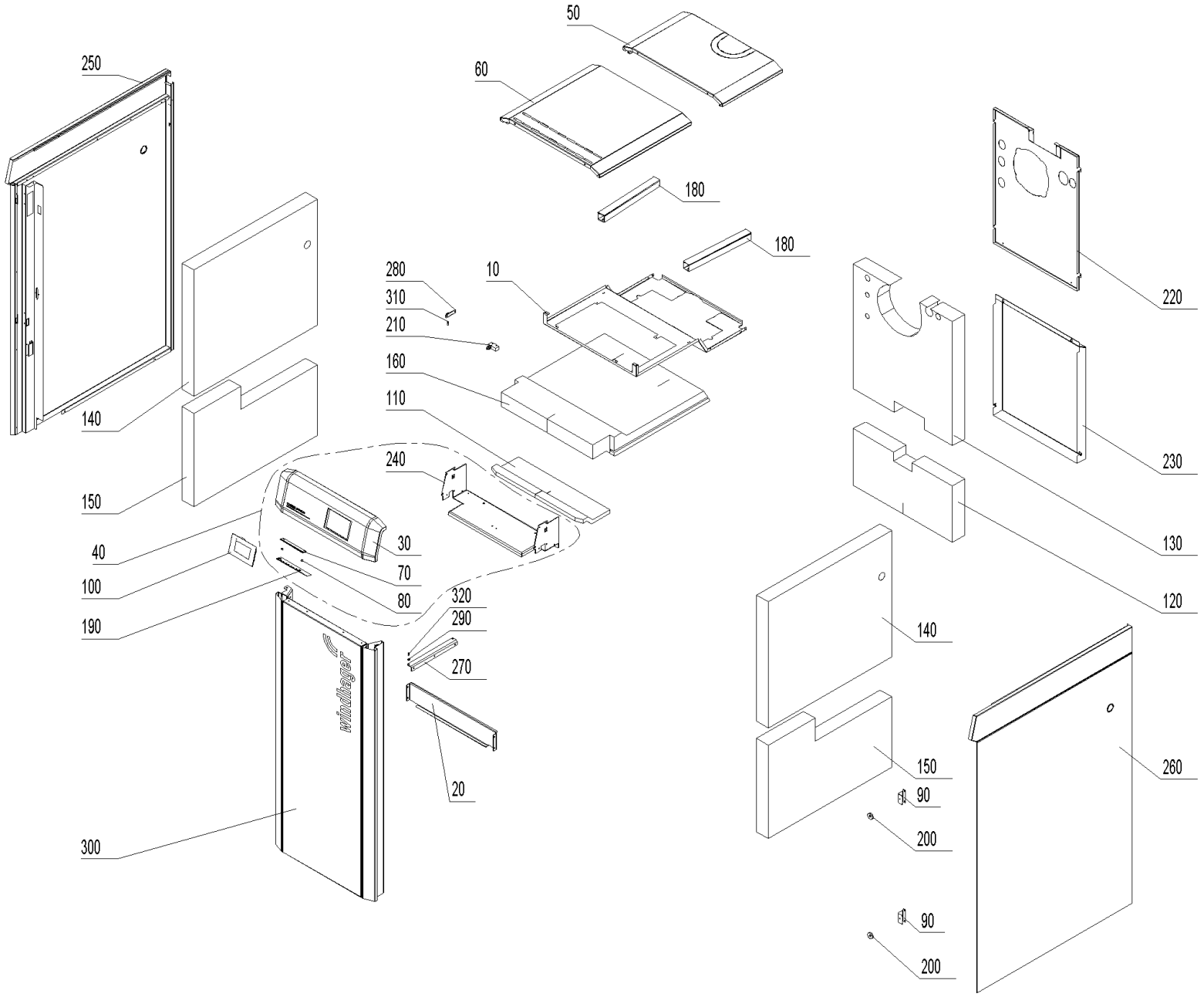

Cladding (A000138)

Item no.	Article no.	Description	Quantity	Unit
10	053773	de: Abdeckblech Isolierung oben LWPT	1.00	pcs
20	051223	Sensor cover	1.00	pcs
30	054137	de: Bedienfeld kpl. LWPT 18-30	1.00	pcs
40	054150	LWP16 Bedienfeld zu LogWIN Premium 180T-305T	1.00	pcs
50	054105	de: Deckel hinten LWPT 18-36	1.00	pcs
60	054104	de: Deckel vorne LWPT 18-36	1.00	pcs
70	007196	de: Diffuser LED-Streifen LWPT	1.00	pcs
80	009694	de: Distanzhülse Ø8xØ4,3x5,4	2.00	pcs
90	053753	de: Haltebügel Magnet LWPT 18-36	2.00	pcs
100	001009	INF8 MES INFINITY InfoWIN Touch	1.00	pcs
110	054183	de: Isolierung Bedienfeld LWPT 18-30	1.00	pcs
120	051216	Bottom rear insulation LWK	1.00	pcs
130	054156	de: Isolierung hinten oben LWPT 18-30	1.00	pcs
140	053989	de: Isolierung links/rechts oben LWPT 18-50	2.00	pcs
150	051222	Bottom left/right insulation	2.00	pcs
160	053985	de: Isolierung oben LWPT 18-30	1.00	pcs
170	009606	de: Kabel InfoWIN Touch auf LED-Streifen	1.00	pcs
180	050837	Cable duct	2.00	pcs
190	012990	de: LED - Balken LWPT	1.00	pcs
200	001761	de: Magnet Ø31 gummiummantelt	2.00	pcs
210	007128	Microswitch Z-15GQ-B for LogWIN Premium 180-505, BioWIN XL 35-60	1.00	pcs
220	051552	de: Rückwand oben LWPT 18-30	1.00	pcs

Cladding (A000138)

Item no.	Article no.	Description	Quantity	Unit
230	050839	Bottom rear panel LWK	1.00	pcs
240	053797	de: Schwelgasführung LWPT 18-36	1.00	pcs
250	054135	de: Seitenwand links LWPT 18-50	1.00	pcs
260	054136	de: Seitenwand rechts LWPT 18-50	1.00	pcs
270	051911	de: Türangel unten LWPT	1.00	pcs
280	051909	de: Türlager oben LWPT	1.00	pcs
290	018309	Disc 5 DIN134	1.00	pcs
300	054133	de: Verkleidungstür kpl. LWPT 18-30	1.00	pcs
310	015507	Dog point screw	1.00	pcs
320	033092	de: Zapfenschrauben M5X5	1.00	pcs

cleaning equipment (A000143)

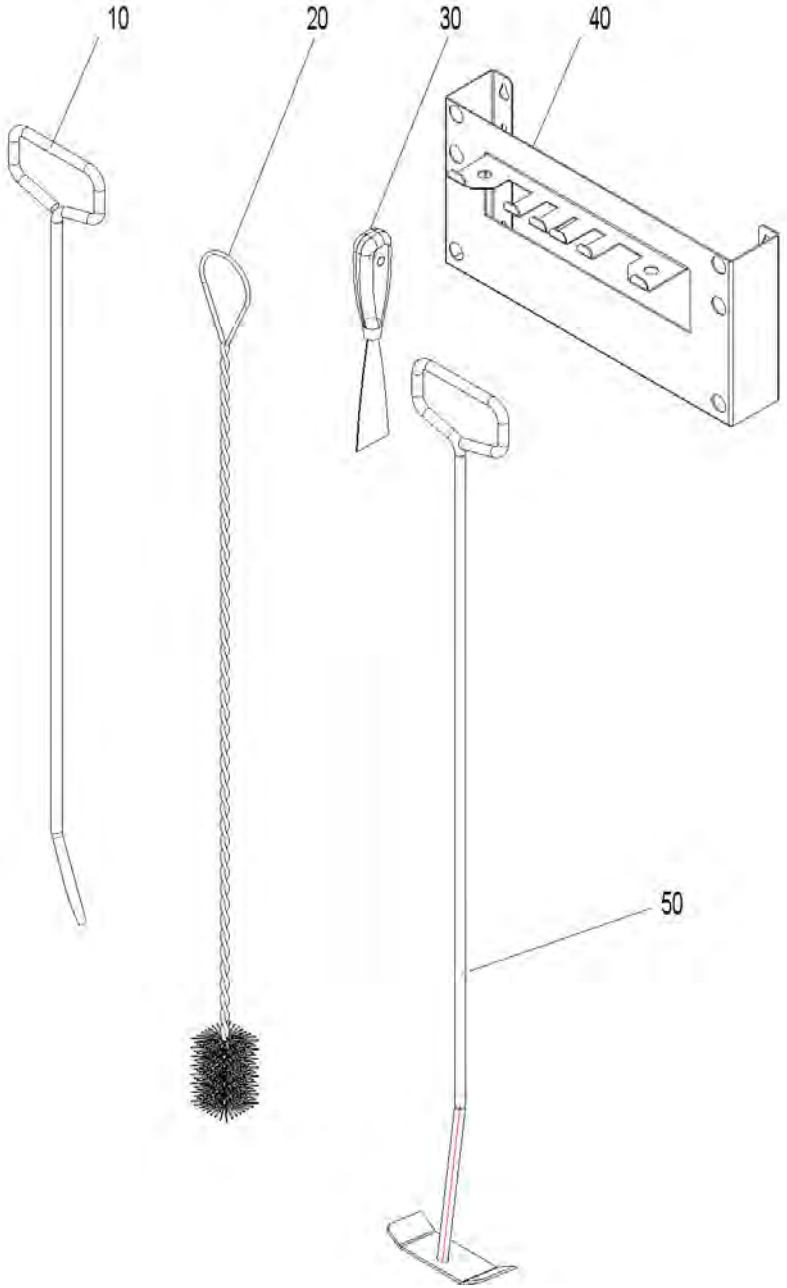

cleaning equipment (A000143)

Item no.	Article no.	Description	Quantity	Unit
10	080664	FAX192 Poker for FAX,HMX,SilvaWIN,FKX,EasyWIN Klassik/Premium 180,LogWIN Premium 180-505	1.00	pcs
20	003088	GWX992 Cleaning brush 950x45mm/45x70 mm for GWX, LogWIN Premium 180-505, EasyWIN Klassik/Premium 180	1.00	pcs
30	009540	Spatula	1.00	pcs
40	042743	Holder for cleaning equipments for VarioWIN, LogWIN Premium 180-505,SilvaWIN,BioWIN XL35-60,EasWIN Klassik/Premium 180	1.00	pcs
50	040328	Cleaning rake for HMX,PMX, EasyWIN Klassik/Premium 180, LogWIN Premium 180-505	1.00	pcs

combustion chamber (A000141)

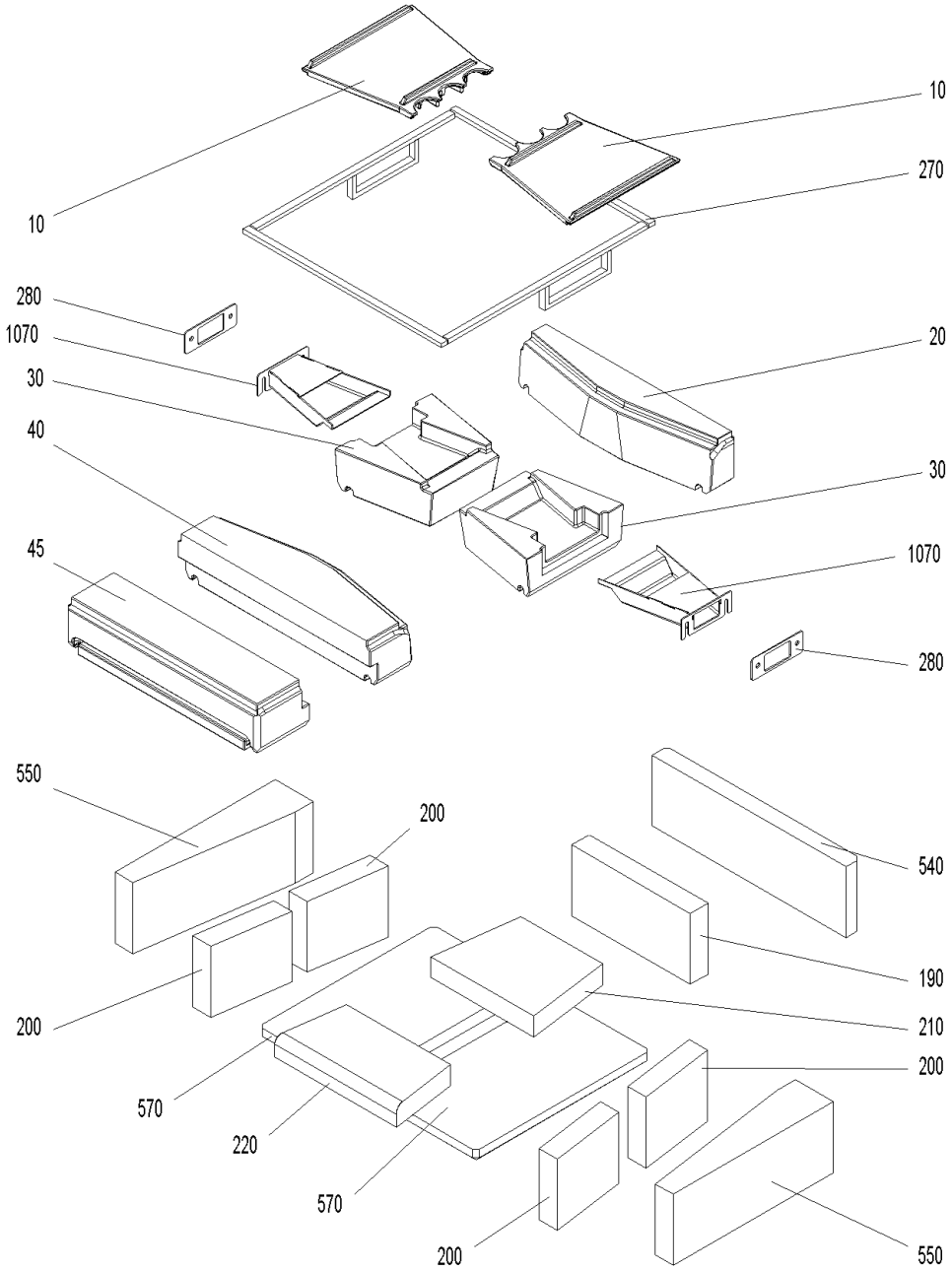

combustion chamber (A000141)

Item no.	Article no.	Description	Quantity	Unit
10	007392	Burning plate LWP/LWK	1.00	pcs
20	007397	Rear burning stone	1.00	pcs
30	007388	Burning stone left/right LWK/LWP	2.00	pcs
40	007377	Front burning stone	1.00	pcs
190	007383	Rear combustion chamber stone LWP18-30, LWK	1.00	pcs
200	051233	Combustion chamber stone left/right LWK	4.00	pcs
210	007384	Bottom rear combustion chamber stone LWP18-30	1.00	pcs
220	007385	Bottom front combustion chamber stone LWP18-30	1.00	pcs
270	046119	Rope seal kit for burning stones LWP18-30	1.00	pcs
280	007391	Seal for secondary air nozzle LWP180-305	2.00	pcs
540	007380	Rear insulating stone for LogWIN Premium 180-305	1.00	pcs
550	051234	Insulating stone left/right LWK	2.00	pcs
570	051236	Bottom insulating stone LWK	2.00	pcs
1070	045326	Secondary air nozzle complete for LogWIN Premium 180-305	2.00	pcs

Control panel (A000140)

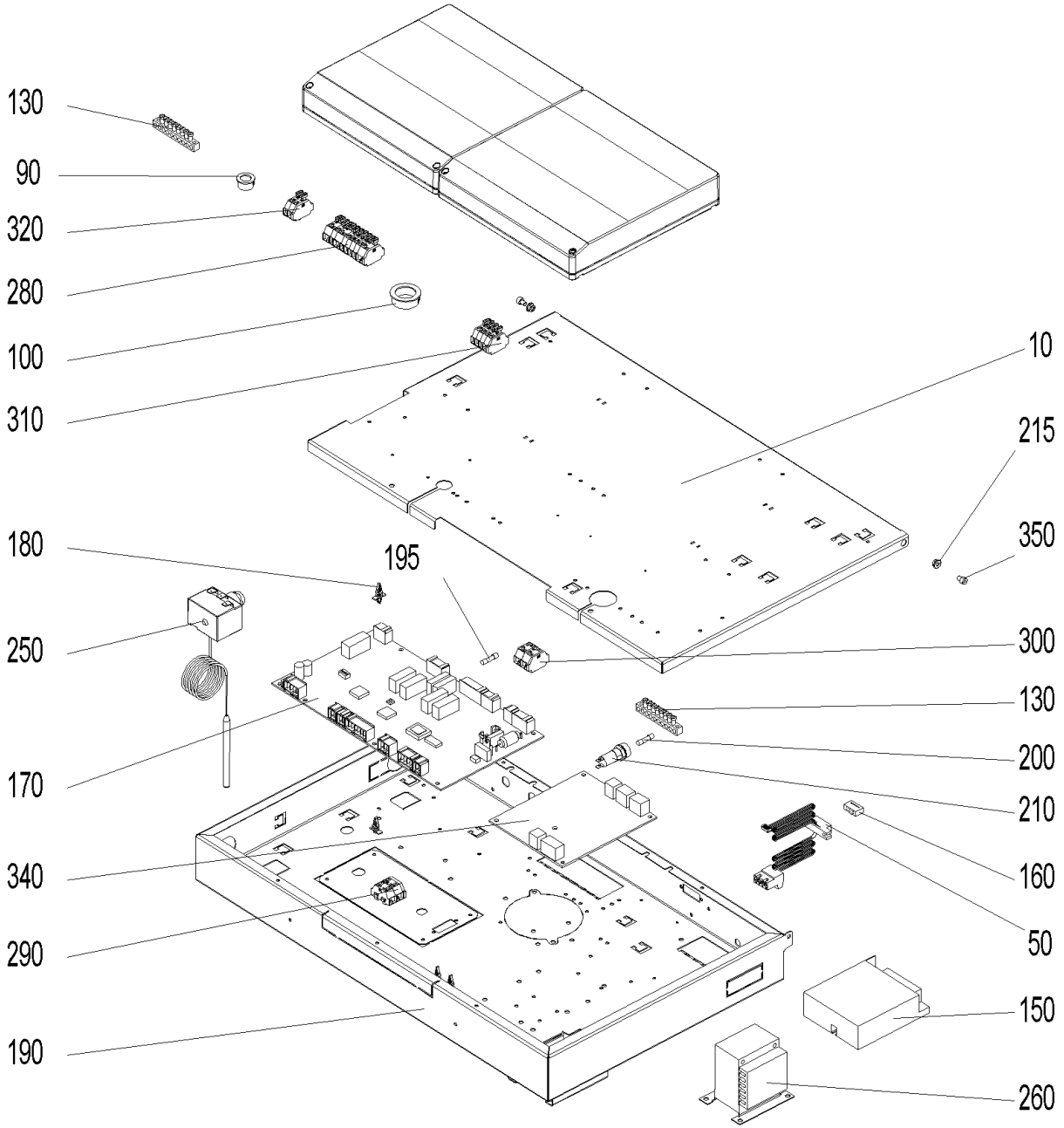

Control panel (A000140)

Item no.	Article no.	Description	Quantity	Unit
10	053779	de: Deckel Schaltfeld BW2T, LWPT	1.00	pcs
20	054311	de: Flachbandkabel vorm. LWPT	1.00	pcs
30	054313	de: Fühlerset vorm. LWPT	1.00	pcs
40	054155	de: Zuleitungskabel LWPT	1.00	pcs
50	009605	de: Kabel - LON LWPT, BWXL2, BW2, BW2T	1.00	pcs
60	002059	Power supply cable (not illustrated)	1.00	pcs
70	007165	Lambda sensor cable (not illustrated)	1.00	pcs
80	048419	Draught fan cable (not illustrated)	1.00	pcs
90	009542	Cable feed-through	1.00	pcs
100	009536	de: Kabeldurchführung 2160 schwarz Ø 28	1.00	pcs
120	054315	de: Kabelsatz 230V SB LWPT	1.00	pcs
130	009929	Terminal bar MS 8-pin 8x8mm for VarioWIN,FireWIN, BioWIN XL 35-60	2.00	pcs
140	041430	Mains connection socket 3-pin for MIRA,ETX,PMX,BioWIN10-26,LogWIN Premium 180-505,EasyWIN Premium 180,BioWIN XL 35-60, FireWIN	1.00	pcs
150	051645	Power supply unit 12V	1.00	pcs
160	005784	Pin connector (not illustrated)	1.00	pcs
170	011999	FMF PCB for LogWIN Premium 180-505	1.00	pcs
180	007609	PCB holder	12.00	pcs
190	052994	de: Schaltfeld Unterteil BW2T, LWPT	1.00	pcs
195	006900	Fuse 1 A T 5x20 ceramic tube	2.00	pcs
200	003228	6.3A fuse (not illustrated)	2.00	pcs
210	003663	Fuse holder	1.00	pcs
215	016564	de: Sperrzahnmutter M4 verzinkt	1.00	pcs

Control panel (A000140)

Item no.	Article no.	Description	Quantity	Unit
220	009318	Plug ST18/3S sw wie for LogWIN Premium 180-505	1.00	pcs
230	502186	MES009M Immersion sensor	1.00	pcs
240	007626	Thermocouple	1.00	pcs
250	005672	Thermostat LS1+100-6U	1.00	pcs
260	007096	Transformer for O2 sensor 18VA for LogWIN Premium 180-505	1.00	pcs
270	054314	de: Trafo O2-Sonde vorm. LWPT	1.00	pcs
280	009891	Wago terminal block 261; 11-pin safety 1-11 for FireWIN, VarioWIN	1.00	pcs
290	006833	Wago terminal block 261; 4-pin "12V GND"	1.00	pcs
300	006834	Wago terminal block 261; 4-pin "safety 1-4"	1.00	pcs
310	006835	de: Wagoblock 261 5tlg."ext. Wärme" 1-4 PMX, BW2T, LWPT	1.00	pcs
320	009948	Wago terminal block 261; 2-pin WMS 1-2, 3-piece for VarioWIN, FireWIN	1.00	pcs
330	009334	de: Zugentlastung 3 pol.f.Bu. Z7.419.2153.OSW	1.00	pcs
340	007095	Extra PCB for O2-mesure or pumping rotation speed control for BioWIN cascade, LogWIN Premium 180-505	1.00	pcs
350	016782	de: Zylinderschraube m. Innensechskant ISO 4762 - M 4 x 10 - 8.8 - verzinkt (DIN 912)	1.00	pcs

Boiler (A000136)

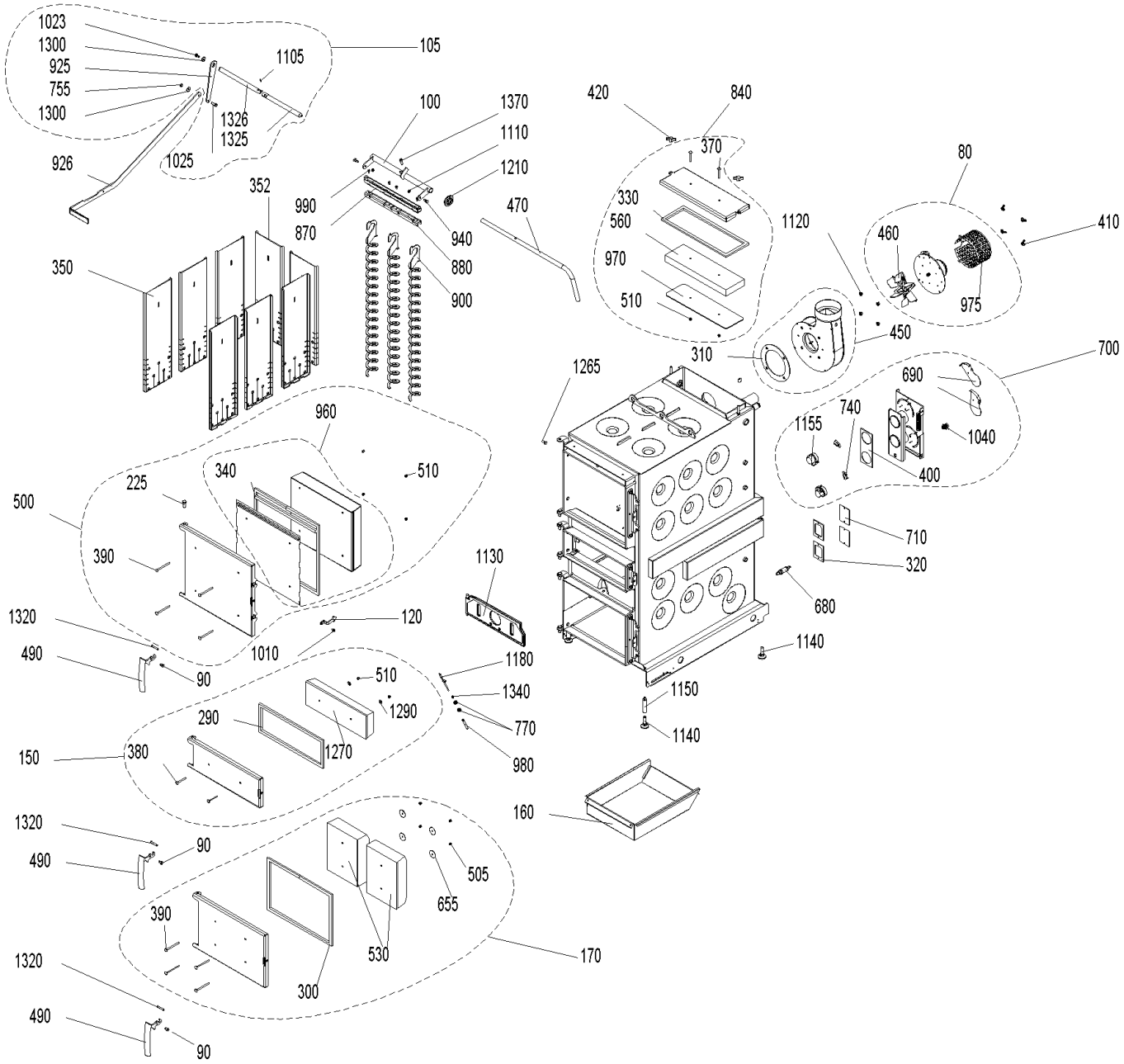

Boiler (A000136)

Item no.	Article no.	Description	Quantity	Unit
80	051661	Flue gas blower, complete for LWK	1.00	pcs
90	048881	Axle for door handle CK45	2.00	pcs
100	046328	Axle for cleaning heating surfaces	1.00	pcs
120	052728	de: Anlüftsicherungshaken rot LWPT	1.00	pcs
150	051564	Lighting door, complete	1.00	pcs
160	045419	Ash pan LWP18-50, LWK	1.00	pcs
170	051563	Ash door, complete LWK	1.00	pcs
225	033104	Door mounting bolt ISO 2341-A - 12x32	1.00	pcs
290	046267	Lighting door seal LWP18-50, LW	1.00	pcs
300	046268	Ash door seal LWP18-50, LWK	1.00	pcs
310	050825	Blower seal LWK	1.00	pcs
320	009378	Seal for vent cover LWP18-50, LWK	4.00	pcs
330	051567	Seal for cleaning cover LWK	1.00	pcs
340	051568	Heating door seal set LWK	1.00	pcs
350	045431	Hook-in plate for LogWIN Premium 180-505	8.00	pcs
352	045431	Hook-in plate for LogWIN Premium 180-505	8.00	pcs
370	016178	Round-head screw M6x55	2.00	pcs
380	016186	Round-head screw M6x60	2.00	pcs
390	016190	Round-head screw M6x90	4.00	pcs
400	009305	Flange seal LWP18-50, LWK	1.00	pcs
410	019410	Wing nut M6	4.00	pcs
420	007366	Wing nut M8	2.00	pcs

Boiler (A000136)

Item no.	Article no.	Description	Quantity	Unit
450	051577	Blower box, complete LWK	1.00	pcs
460	053032	Blower wheel	1.00	pcs
470	045447	Handle for cleaning heating surfaces for LogWIN Premium 180-305	1.00	pcs
490	048811	Boiler handle	3.00	pcs
500	051579	Heating door, complete LWK	1.00	pcs
505	016192	Cap nut	4.00	pcs
510	025968	Cap nut M6	1.00	pcs
530	050585	Insulating stone AT LWK	2.00	pcs
560	050542	Insulating stone for cleaning cover LWK	1.00	pcs
655	016191	Washer M6 4x40x1,5	4.00	pcs
680	051646	Lambda sensor	1.00	pcs
690	040032	Air choke	2.00	pcs
700	054194	de: Luftregler kpl. mont. LWPT	1.00	pcs
710	046338	Vent cover	4.00	pcs
740	009277	Air control microswitch	2.00	pcs
770	031156	Hexagon nut M10 DIN 439	2.00	pcs
840	051663	Cleaning cover LWK	1.00	pcs
870	046325	Top cleaning profile for LogWIN Premium 180-305	1.00	pcs
880	046323	Bottom cleaning profile for LogWIN Premium 180-305	1.00	pcs
900	046322	Cleaning auger for LogWIN Premium 180-505	4.00	pcs
940	006756	Screw M6 for heating surface cleaning for PMX,BioWIN 10-26,FireWIN, BioWIN XL 35-60, LogWIN Premium 180-505	2.00	pcs
960	053240	Heating door protection plate LWK	1.00	pcs

Boiler (A000136)

Item no.	Article no.	Description	Quantity	Unit
970	051666	Cleaning cover protection plate LWK	1.00	pcs
975	010882	Flue gas blower protection hood LWK	1.00	pcs
980	051231	Thermocontrol sensor protective tube LWK	1.00	pcs
990	031545	Hexagon screw M5x12 DIN 7500 (not ilustrated)	1.00	pcs
1010	051671	Door screw M8	1.00	pcs
1040	017205	Hexagon screws M12x25-8.8	1.00	pcs
1110	016566	Hexagon nut with flange and gearing M6	1.00	pcs
1120	016553	Hexagon nut M8 with flange and gearing	4.00	pcs
1130	051162	Vertical grate LWK/LWP	1.00	pcs
1140	009994	Foot M12X40 JTB38 for HMX, EasyWIN Klassik/Premium 180, LogWIN Premium 180-505	4.00	pcs
1150	007453	Leg extension for LogWIN Premium 180-505, EasyWIN Klassik/Premium 180	2.00	pcs
1155	040429	Servomotor for HMX, SilvaWIN, LogWIN Premium 180-505	2.00	pcs
1180	007626	Thermocouple	1.00	pcs
1210	048812	Grommet for EasyWIN, LogWIN Premium 180-505	1.00	pcs
1265	051671	Door screw M8	1.00	pcs
1270	050590	Door stone for lighting door LWK	1.00	pcs
1290	031753	Disc 6 ISO 7093	1.00	pcs
1320	050568	Locking axle LWK	3.00	pcs
1340	007164	Tension spring	1.00	pcs
1370	017046	Cyl. screw M 8X30	1.00	pcs

Cladding (A000138)

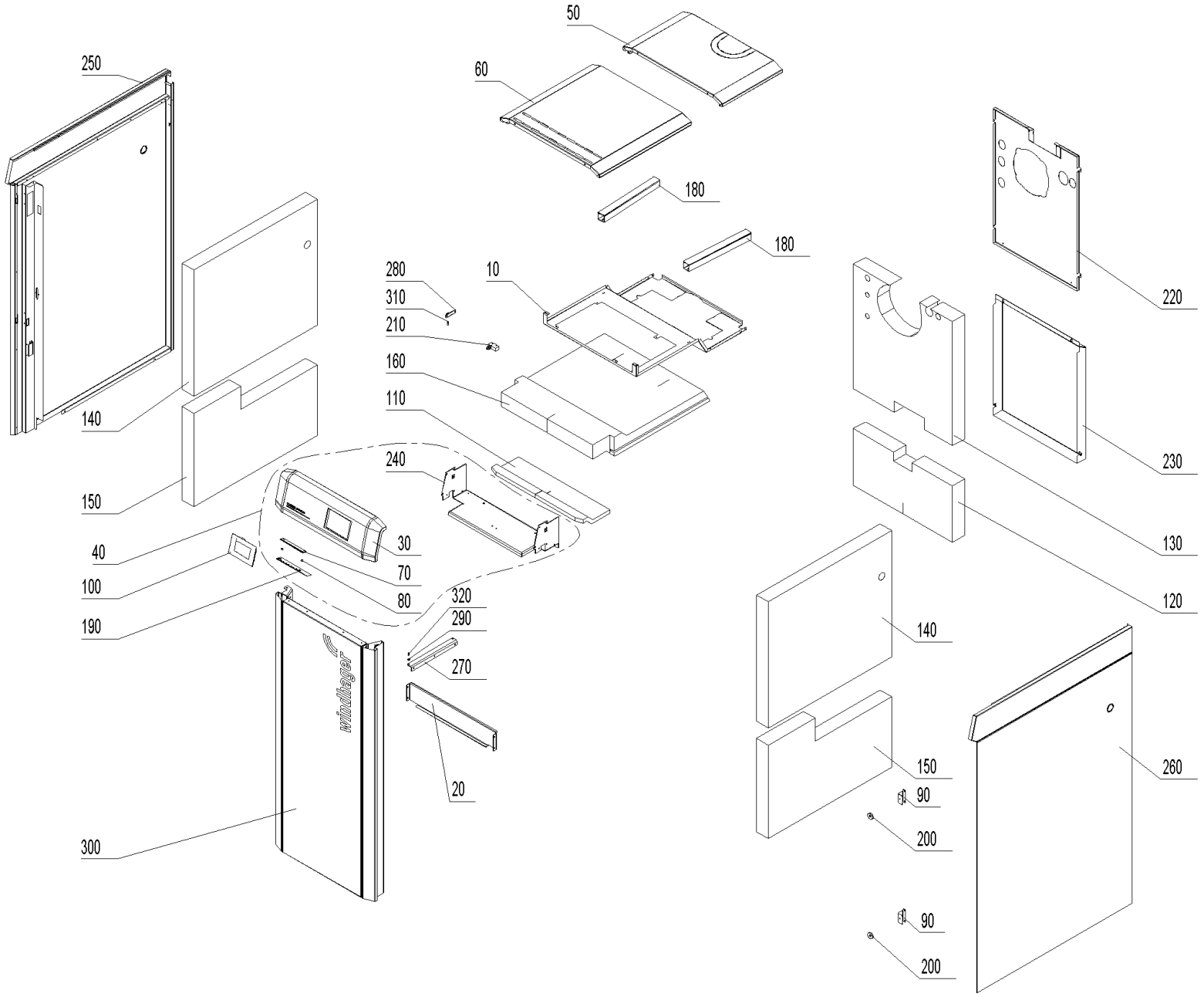

Cladding (A000138)

Item no.	Article no.	Description	Quantity	Unit
10	053773	de: Abdeckblech Isolierung oben LWPT	1.00	pcs
20	051223	Sensor cover	1.00	pcs
30	054137	de: Bedienfeld kpl. LWPT 18-30	1.00	pcs
40	054150	LWP16 Bedienfeld zu LogWIN Premium 180T-305T	1.00	pcs
50	054105	de: Deckel hinten LWPT 18-36	1.00	pcs
60	054104	de: Deckel vorne LWPT 18-36	1.00	pcs
70	007196	de: Diffuser LED-Streifen LWPT	1.00	pcs
80	009694	de: Distanzhülse Ø8xØ4,3x5,4	2.00	pcs
90	053753	de: Haltebügel Magnet LWPT 18-36	2.00	pcs
100	001009	INF8 MES INFINITY InfoWIN Touch	1.00	pcs
110	054183	de: Isolierung Bedienfeld LWPT 18-30	1.00	pcs
120	051216	Bottom rear insulation LWK	1.00	pcs
130	054156	de: Isolierung hinten oben LWPT 18-30	1.00	pcs
140	053989	de: Isolierung links/rechts oben LWPT 18-50	2.00	pcs
150	051222	Bottom left/right insulation	2.00	pcs
160	053985	de: Isolierung oben LWPT 18-30	1.00	pcs
170	009606	de: Kabel InfoWIN Touch auf LED-Streifen	1.00	pcs
180	050837	Cable duct	2.00	pcs
190	012990	de: LED - Balken LWPT	1.00	pcs
200	001761	de: Magnet Ø31 gummiummantelt	2.00	pcs
210	007128	Microswitch Z-15GQ-B for LogWIN Premium 180-505, BioWIN XL 35-60	1.00	pcs
220	051552	de: Rückwand oben LWPT 18-30	1.00	pcs

Cladding (A000138)

Item no.	Article no.	Description	Quantity	Unit
230	050839	Bottom rear panel LWK	1.00	pcs
240	053797	de: Schwelgasführung LWPT 18-36	1.00	pcs
250	054135	de: Seitenwand links LWPT 18-50	1.00	pcs
260	054136	de: Seitenwand rechts LWPT 18-50	1.00	pcs
270	051911	de: Türangel unten LWPT	1.00	pcs
280	051909	de: Türlager oben LWPT	1.00	pcs
290	018309	Disc 5 DIN134	1.00	pcs
300	054133	de: Verkleidungstür kpl. LWPT 18-30	1.00	pcs
310	015507	Dog point screw	1.00	pcs
320	033092	de: Zapfenschrauben M5X5	1.00	pcs

cleaning equipment (A000143)

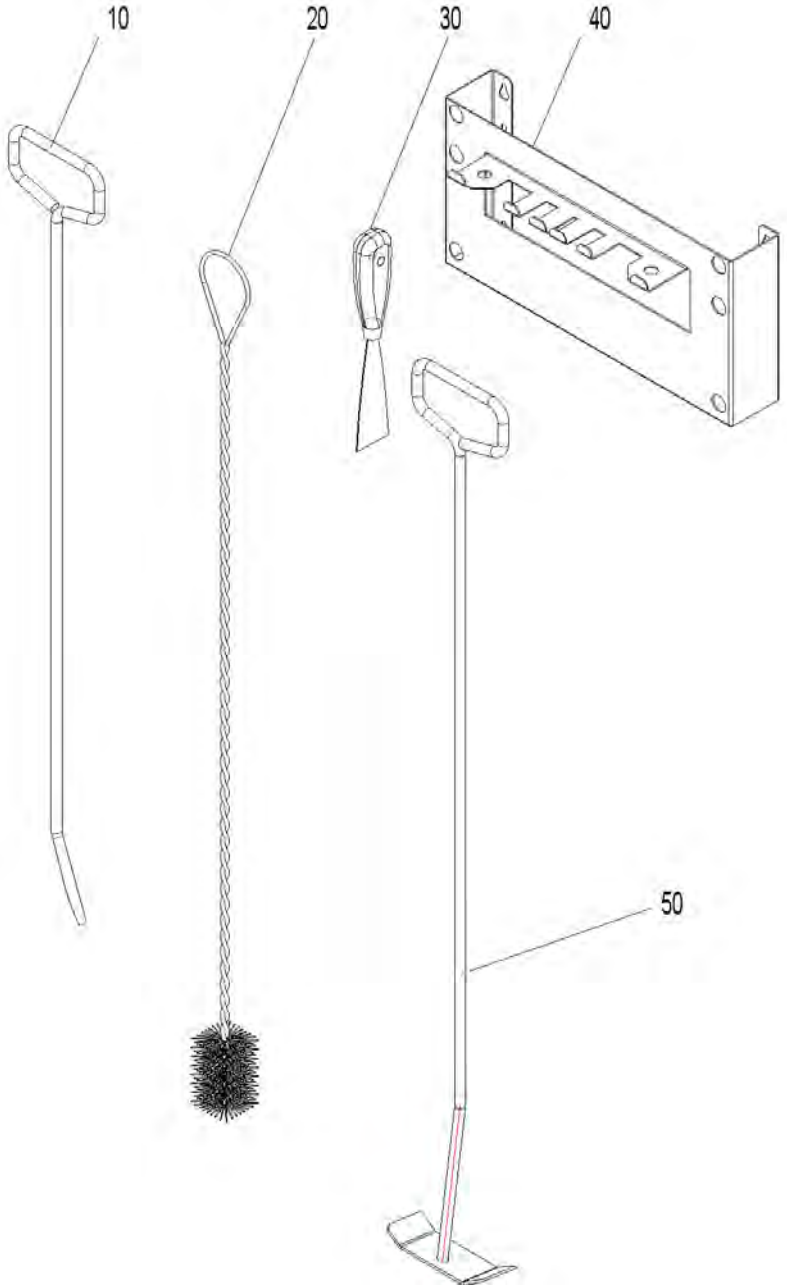

cleaning equipment (A000143)

Item no.	Article no.	Description	Quantity	Unit
10	080664	FAX192 Poker for FAX,HMX,SilvaWIN,FKX,EasyWIN Klassik/Premium 180,LogWIN Premium 180-505	1.00	pcs
20	003088	GWX992 Cleaning brush 950x45mm/45x70 mm for GWX, LogWIN Premium 180-505, EasyWIN Klassik/Premium 180	1.00	pcs
30	009540	Spatula	1.00	pcs
40	042743	Holder for cleaning equipments for VarioWIN, LogWIN Premium 180-505,SilvaWIN,BioWIN XL35-60,EasWIN Klassik/Premium 180	1.00	pcs
50	040328	Cleaning rake for HMX,PMX, EasyWIN Klassik/Premium 180, LogWIN Premium 180-505	1.00	pcs

combustion chamber (A000141)

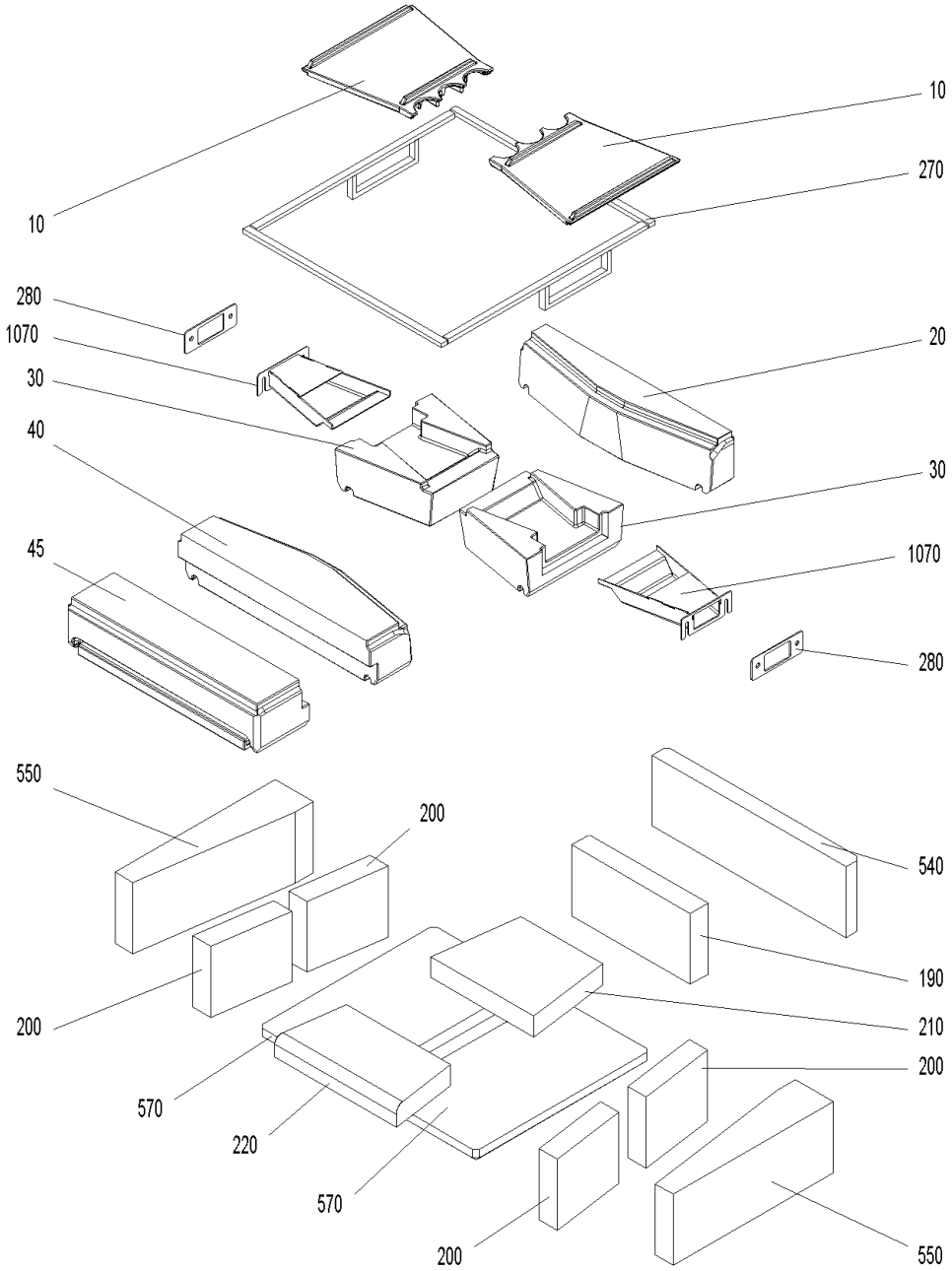

combustion chamber (A000141)

Item no.	Article no.	Description	Quantity	Unit
10	007392	Burning plate LWP/LWK	1.00	pcs
20	007397	Rear burning stone	1.00	pcs
30	007388	Burning stone left/right LWK/LWP	2.00	pcs
40	007377	Front burning stone	1.00	pcs
190	007383	Rear combustion chamber stone LWP18-30, LWK	1.00	pcs
200	051233	Combustion chamber stone left/right LWK	4.00	pcs
210	007384	Bottom rear combustion chamber stone LWP18-30	1.00	pcs
220	007385	Bottom front combustion chamber stone LWP18-30	1.00	pcs
270	046119	Rope seal kit for burning stones LWP18-30	1.00	pcs
280	007391	Seal for secondary air nozzle LWP180-305	2.00	pcs
540	007380	Rear insulating stone for LogWIN Premium 180-305	1.00	pcs
550	051234	Insulating stone left/right LWK	2.00	pcs
570	051236	Bottom insulating stone LWK	2.00	pcs
1070	045326	Secondary air nozzle complete for LogWIN Premium 180-305	2.00	pcs

Control panel (A000140)

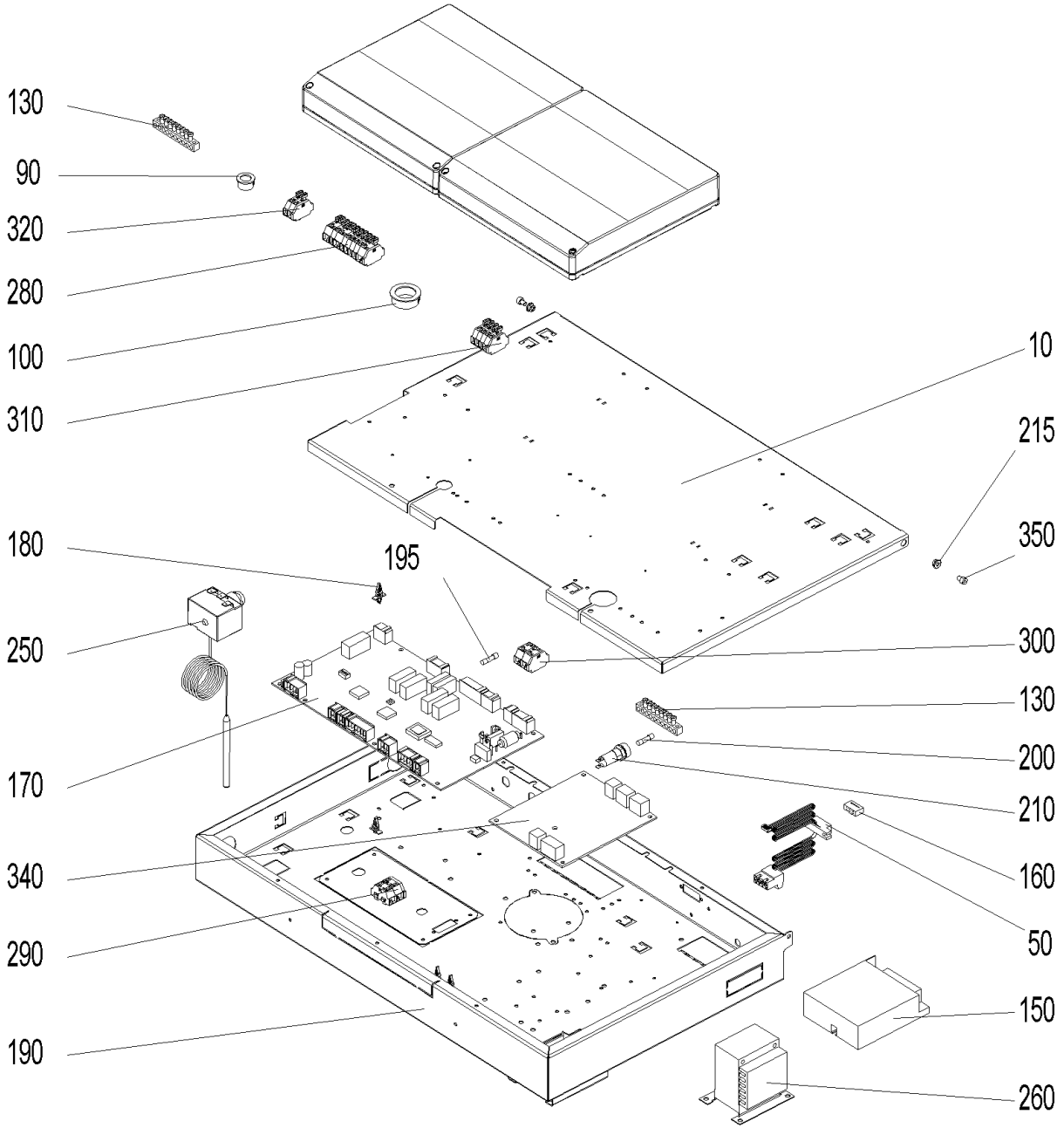

Control panel (A000140)

Item no.	Article no.	Description	Quantity	Unit
10	053779	de: Deckel Schaltfeld BW2T, LWPT	1.00	pcs
20	054311	de: Flachbandkabel vorm. LWPT	1.00	pcs
30	054313	de: Fühlerset vorm. LWPT	1.00	pcs
40	054155	de: Zuleitungskabel LWPT	1.00	pcs
50	009605	de: Kabel - LON LWPT, BWXL2, BW2, BW2T	1.00	pcs
60	002059	Power supply cable (not illustrated)	1.00	pcs
70	007165	Lambda sensor cable (not illustrated)	1.00	pcs
80	048419	Draught fan cable (not illustrated)	1.00	pcs
90	009542	Cable feed-through	1.00	pcs
100	009536	de: Kabeldurchführung 2160 schwarz Ø 28	1.00	pcs
120	054315	de: Kabelsatz 230V SB LWPT	1.00	pcs
130	009929	Terminal bar MS 8-pin 8x8mm for VarioWIN,FireWIN, BioWIN XL 35-60	2.00	pcs
140	041430	Mains connection socket 3-pin for MIRA,ETX,PMX,BioWIN10-26,LogWIN Premium 180-505,EasyWIN Premium 180,BioWIN XL 35-60, FireWIN	1.00	pcs
150	051645	Power supply unit 12V	1.00	pcs
160	005784	Pin connector (not illustrated)	1.00	pcs
170	011999	FMF PCB for LogWIN Premium 180-505	1.00	pcs
180	007609	PCB holder	12.00	pcs
190	052994	de: Schaltfeld Unterteil BW2T, LWPT	1.00	pcs
195	006900	Fuse 1 A T 5x20 ceramic tube	2.00	pcs
200	003228	6.3A fuse (not illustrated)	2.00	pcs
210	003663	Fuse holder	1.00	pcs
215	016564	de: Sperrzahnmutter M4 verzinkt	1.00	pcs

Control panel (A000140)

Item no.	Article no.	Description	Quantity	Unit
220	009318	Plug ST18/3S sw wie for LogWIN Premium 180-505	1.00	pcs
230	502186	MES009M Immersion sensor	1.00	pcs
240	007626	Thermocouple	1.00	pcs
250	005672	Thermostat LS1+100-6U	1.00	pcs
260	007096	Transformer for O2 sensor 18VA for LogWIN Premium 180-505	1.00	pcs
270	054314	de: Trafo O2-Sonde vorm. LWPT	1.00	pcs
280	009891	Wago terminal block 261; 11-pin safety 1-11 for FireWIN, VarioWIN	1.00	pcs
290	006833	Wago terminal block 261; 4-pin "12V GND"	1.00	pcs
300	006834	Wago terminal block 261; 4-pin "safety 1-4"	1.00	pcs
310	006835	de: Wagoblock 261 5tlg."ext. Wärme" 1-4 PMX, BW2T, LWPT	1.00	pcs
320	009948	Wago terminal block 261; 2-pin WMS 1-2, 3-piece for VarioWIN, FireWIN	1.00	pcs
330	009334	de: Zugentlastung 3 pol.f.Bu. Z7.419.2153.OSW	1.00	pcs
340	007095	Extra PCB for O2-mesure or pumping rotation speed control for BioWIN cascade, LogWIN Premium 180-505	1.00	pcs
350	016782	de: Zylinderschraube m. Innensechskant ISO 4762 - M 4 x 10 - 8.8 - verzinkt (DIN 912)	1.00	pcs

Boiler (A000136)

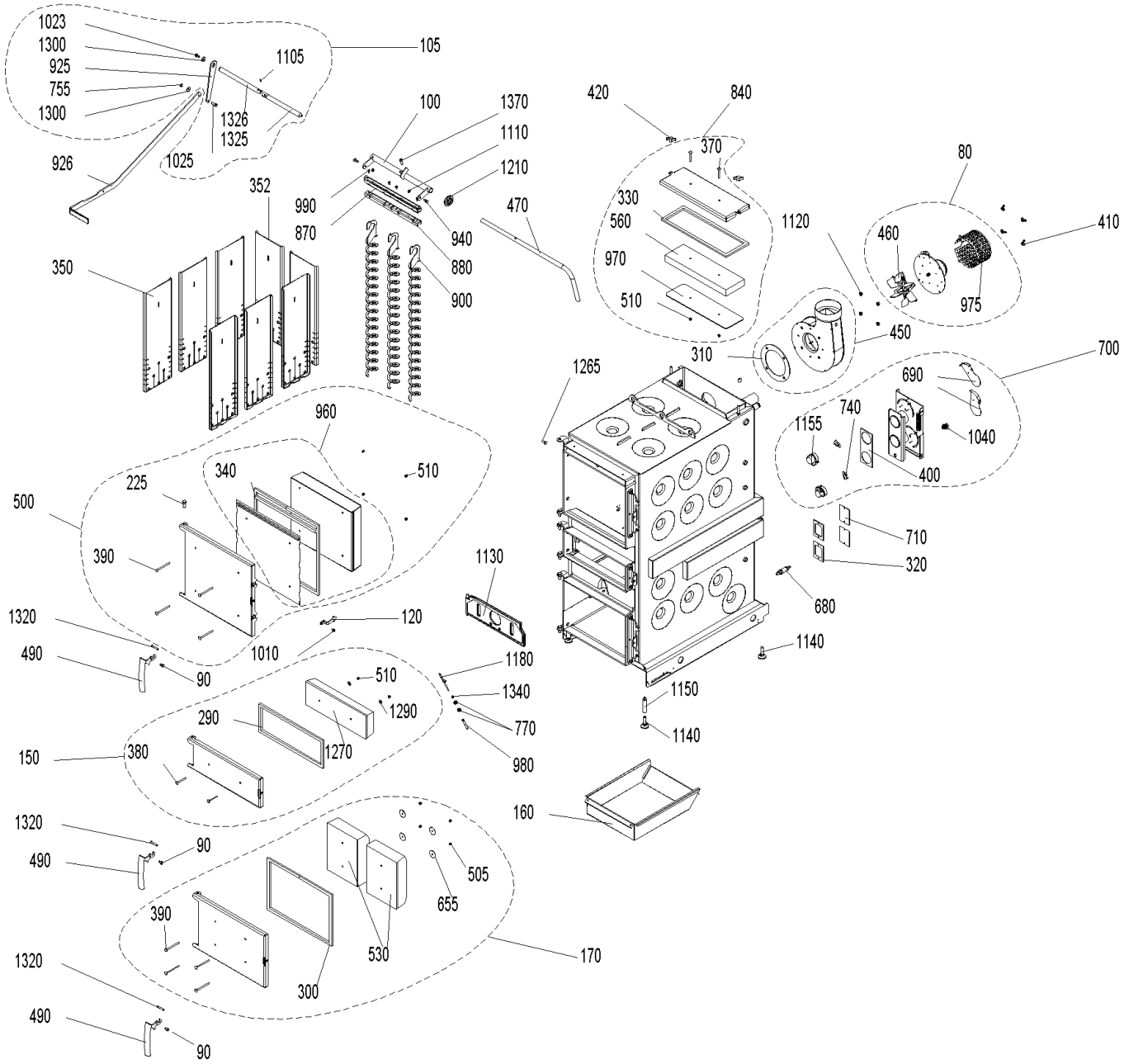

Boiler (A000136)

Item no.	Article no.	Description	Quantity	Unit
80	051661	Flue gas blower, complete for LWK	1.00	pcs
90	048881	Axle for door handle CK45	2.00	pcs
100	046328	Axle for cleaning heating surfaces	1.00	pcs
120	052728	de: Anlüftsicherungshaken rot LWPT	1.00	pcs
150	051564	Lighting door, complete	1.00	pcs
160	045419	Ash pan LWP18-50, LWK	1.00	pcs
170	051563	Ash door, complete LWK	1.00	pcs
225	033104	Door mounting bolt ISO 2341-A - 12x32	1.00	pcs
290	046267	Lighting door seal LWP18-50, LW	1.00	pcs
300	046268	Ash door seal LWP18-50, LWK	1.00	pcs
310	050825	Blower seal LWK	1.00	pcs
320	009378	Seal for vent cover LWP18-50, LWK	4.00	pcs
330	051567	Seal for cleaning cover LWK	1.00	pcs
340	051568	Heating door seal set LWK	1.00	pcs
350	045431	Hook-in plate for LogWIN Premium 180-505	8.00	pcs
352	045431	Hook-in plate for LogWIN Premium 180-505	8.00	pcs
370	016178	Round-head screw M6x55	2.00	pcs
380	016186	Round-head screw M6x60	2.00	pcs
390	016190	Round-head screw M6x90	4.00	pcs
400	009305	Flange seal LWP18-50, LWK	1.00	pcs
410	019410	Wing nut M6	4.00	pcs
420	007366	Wing nut M8	2.00	pcs

Boiler (A000136)

Item no.	Article no.	Description	Quantity	Unit
450	051577	Blower box, complete LWK	1.00	pcs
460	053032	Blower wheel	1.00	pcs
470	045447	Handle for cleaning heating surfaces for LogWIN Premium 180-305	1.00	pcs
490	048811	Boiler handle	3.00	pcs
500	051579	Heating door, complete LWK	1.00	pcs
505	016192	Cap nut	4.00	pcs
510	025968	Cap nut M6	1.00	pcs
530	050585	Insulating stone AT LWK	2.00	pcs
560	050542	Insulating stone for cleaning cover LWK	1.00	pcs
655	016191	Washer M6 4x40x1,5	4.00	pcs
680	051646	Lambda sensor	1.00	pcs
690	040032	Air choke	2.00	pcs
700	054194	de: Luftregler kpl. mont. LWPT	1.00	pcs
710	046338	Vent cover	4.00	pcs
740	009277	Air control microswitch	2.00	pcs
770	031156	Hexagon nut M10 DIN 439	2.00	pcs
840	051663	Cleaning cover LWK	1.00	pcs
870	046325	Top cleaning profile for LogWIN Premium 180-305	1.00	pcs
880	046323	Bottom cleaning profile for LogWIN Premium 180-305	1.00	pcs
900	046322	Cleaning auger for LogWIN Premium 180-505	4.00	pcs
940	006756	Screw M6 for heating surface cleaning for PMX,BioWIN 10-26,FireWIN, BioWIN XL 35-60, LogWIN Premium 180-505	2.00	pcs
960	053240	Heating door protection plate LWK	1.00	pcs

Boiler (A000136)

Item no.	Article no.	Description	Quantity	Unit
970	051666	Cleaning cover protection plate LWK	1.00	pcs
975	010882	Flue gas blower protection hood LWK	1.00	pcs
980	051231	Thermocontrol sensor protective tube LWK	1.00	pcs
990	031545	Hexagon screw M5x12 DIN 7500 (not ilustrated)	1.00	pcs
1010	051671	Door screw M8	1.00	pcs
1040	017205	Hexagon screws M12x25-8.8	1.00	pcs
1110	016566	Hexagon nut with flange and gearing M6	1.00	pcs
1120	016553	Hexagon nut M8 with flange and gearing	4.00	pcs
1130	051162	Vertical grate LWK/LWP	1.00	pcs
1140	009994	Foot M12X40 JTB38 for HMX, EasyWIN Klassik/Premium 180, LogWIN Premium 180-505	4.00	pcs
1150	007453	Leg extension for LogWIN Premium 180-505, EasyWIN Klassik/Premium 180	2.00	pcs
1155	040429	Servomotor for HMX, SilvaWIN, LogWIN Premium 180-505	2.00	pcs
1180	007626	Thermocouple	1.00	pcs
1210	048812	Grommet for EasyWIN, LogWIN Premium 180-505	1.00	pcs
1265	051671	Door screw M8	1.00	pcs
1270	050590	Door stone for lighting door LWK	1.00	pcs
1290	031753	Disc 6 ISO 7093	1.00	pcs
1320	050568	Locking axle LWK	3.00	pcs
1340	007164	Tension spring	1.00	pcs
1370	017046	Cyl. screw M 8X30	1.00	pcs

Cladding (A000138)

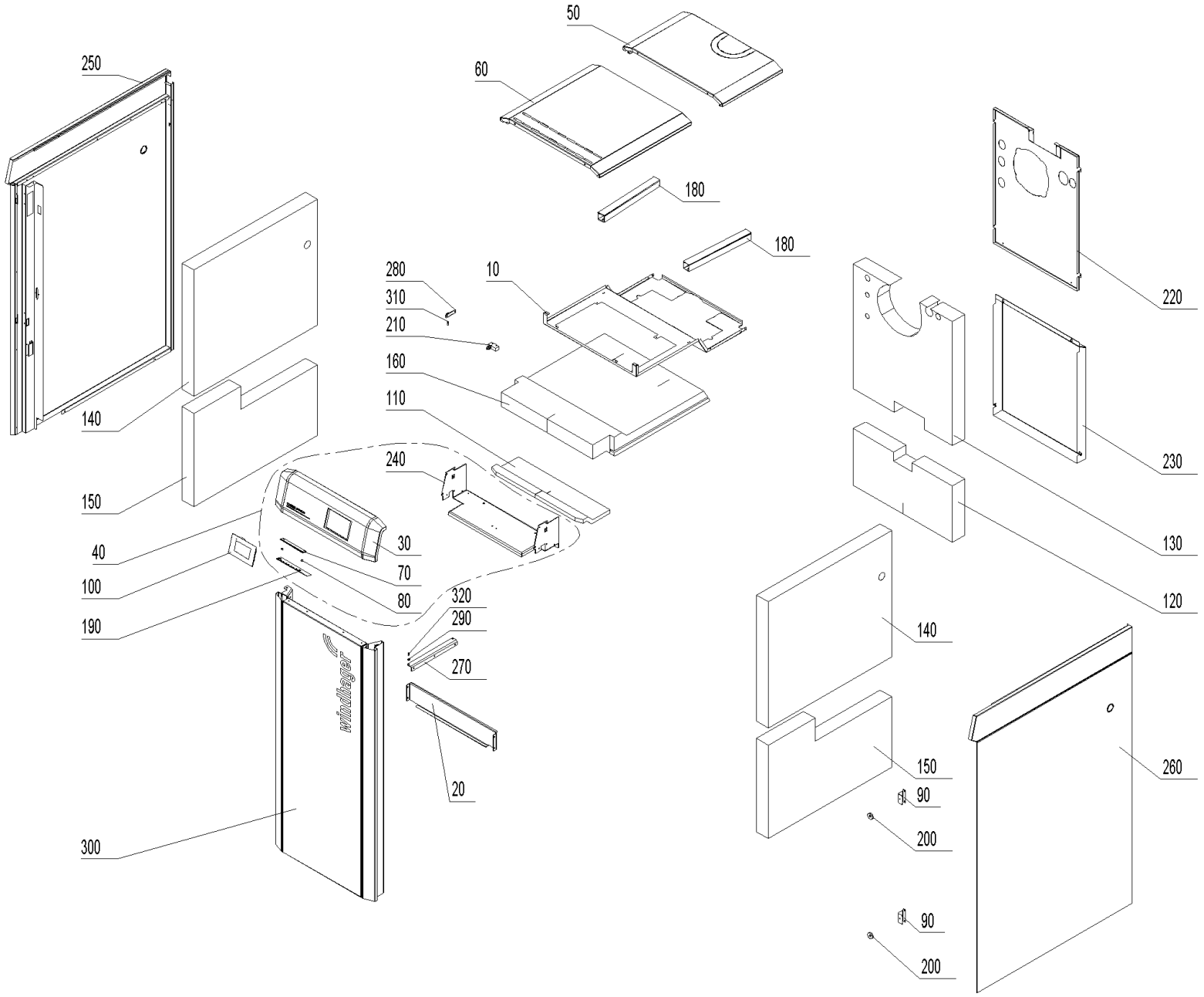

Cladding (A000138)

Item no.	Article no.	Description	Quantity	Unit
10	053773	de: Abdeckblech Isolierung oben LWPT	1.00	pcs
20	051223	Sensor cover	1.00	pcs
30	054137	de: Bedienfeld kpl. LWPT 18-30	1.00	pcs
40	054150	LWP16 Bedienfeld zu LogWIN Premium 180T-305T	1.00	pcs
50	054105	de: Deckel hinten LWPT 18-36	1.00	pcs
60	054104	de: Deckel vorne LWPT 18-36	1.00	pcs
70	007196	de: Diffuser LED-Streifen LWPT	1.00	pcs
80	009694	de: Distanzhülse Ø8xØ4,3x5,4	2.00	pcs
90	053753	de: Haltebügel Magnet LWPT 18-36	2.00	pcs
100	001009	INF8 MES INFINITY InfoWIN Touch	1.00	pcs
110	054183	de: Isolierung Bedienfeld LWPT 18-30	1.00	pcs
120	051216	Bottom rear insulation LWK	1.00	pcs
130	054156	de: Isolierung hinten oben LWPT 18-30	1.00	pcs
140	053989	de: Isolierung links/rechts oben LWPT 18-50	2.00	pcs
150	051222	Bottom left/right insulation	2.00	pcs
160	053985	de: Isolierung oben LWPT 18-30	1.00	pcs
170	009606	de: Kabel InfoWIN Touch auf LED-Streifen	1.00	pcs
180	050837	Cable duct	2.00	pcs
190	012990	de: LED - Balken LWPT	1.00	pcs
200	001761	de: Magnet Ø31 gummiummantelt	2.00	pcs
210	007128	Microswitch Z-15GQ-B for LogWIN Premium 180-505, BioWIN XL 35-60	1.00	pcs
220	051552	de: Rückwand oben LWPT 18-30	1.00	pcs

Cladding (A000138)

Item no.	Article no.	Description	Quantity	Unit
230	050839	Bottom rear panel LWK	1.00	pcs
240	053797	de: Schwelgasführung LWPT 18-36	1.00	pcs
250	054135	de: Seitenwand links LWPT 18-50	1.00	pcs
260	054136	de: Seitenwand rechts LWPT 18-50	1.00	pcs
270	051911	de: Türangel unten LWPT	1.00	pcs
280	051909	de: Türlager oben LWPT	1.00	pcs
290	018309	Disc 5 DIN134	1.00	pcs
300	054133	de: Verkleidungstür kpl. LWPT 18-30	1.00	pcs
310	015507	Dog point screw	1.00	pcs
320	033092	de: Zapfenschrauben M5X5	1.00	pcs

cleaning equipment (A000143)

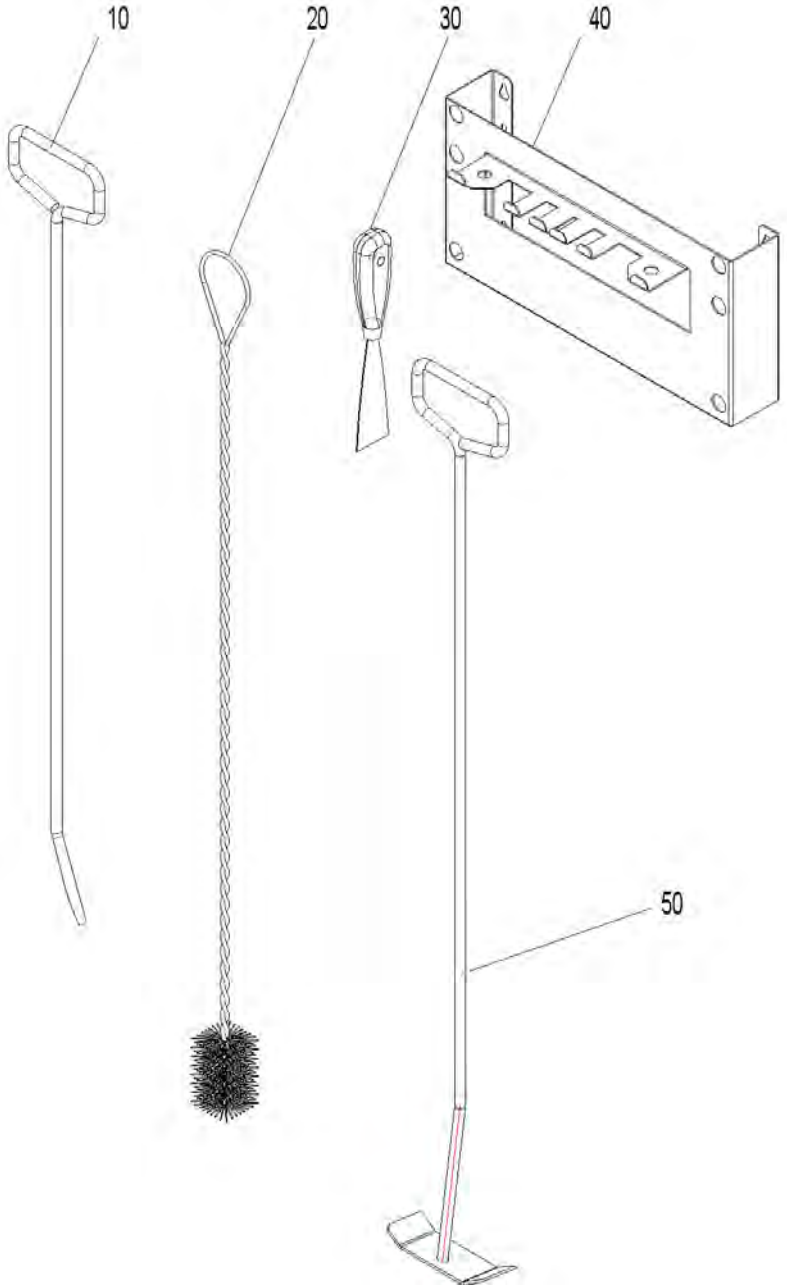

cleaning equipment (A000143)

Item no.	Article no.	Description	Quantity	Unit
10	080664	FAX192 Poker for FAX,HMX,SilvaWIN,FKX,EasyWIN Klassik/Premium 180,LogWIN Premium 180-505	1.00	pcs
20	003088	GWX992 Cleaning brush 950x45mm/45x70 mm for GWX, LogWIN Premium 180-505, EasyWIN Klassik/Premium 180	1.00	pcs
30	009540	Spatula	1.00	pcs
40	042743	Holder for cleaning equipments for VarioWIN, LogWIN Premium 180-505,SilvaWIN,BioWIN XL35-60,EasWIN Klassik/Premium 180	1.00	pcs
50	040328	Cleaning rake for HMX,PMX, EasyWIN Klassik/Premium 180, LogWIN Premium 180-505	1.00	pcs

combustion chamber (A000141)

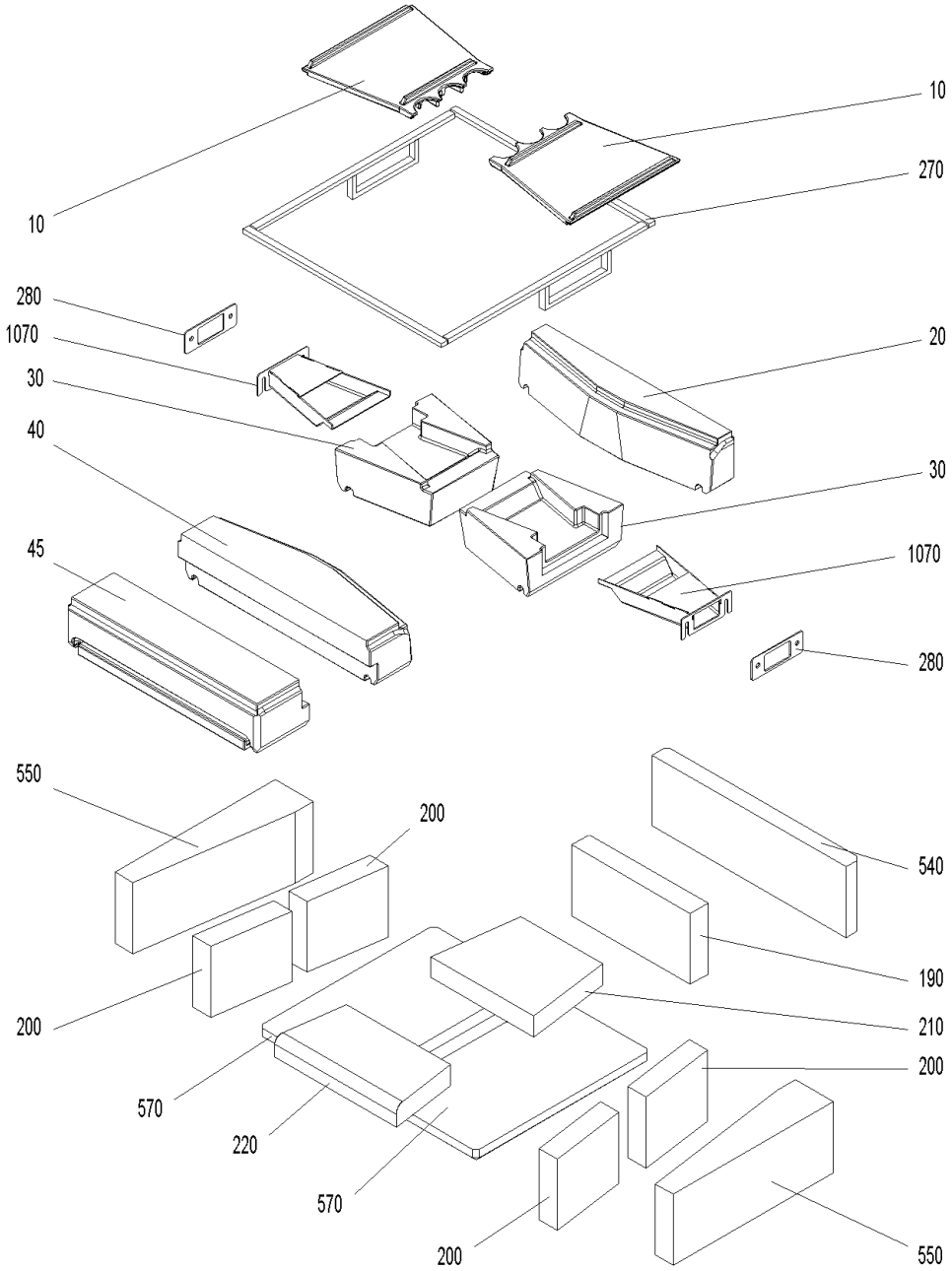

combustion chamber (A000141)

Item no.	Article no.	Description	Quantity	Unit
10	007392	Burning plate LWP/LWK	1.00	pcs
20	007397	Rear burning stone	1.00	pcs
30	007388	Burning stone left/right LWK/LWP	2.00	pcs
40	007377	Front burning stone	1.00	pcs
190	007383	Rear combustion chamber stone LWP18-30, LWK	1.00	pcs
200	051233	Combustion chamber stone left/right LWK	4.00	pcs
210	007384	Bottom rear combustion chamber stone LWP18-30	1.00	pcs
220	007385	Bottom front combustion chamber stone LWP18-30	1.00	pcs
270	046119	Rope seal kit for burning stones LWP18-30	1.00	pcs
280	007391	Seal for secondary air nozzle LWP180-305	2.00	pcs
540	007380	Rear insulating stone for LogWIN Premium 180-305	1.00	pcs
550	051234	Insulating stone left/right LWK	2.00	pcs
570	051236	Bottom insulating stone LWK	2.00	pcs
1070	045326	Secondary air nozzle complete for LogWIN Premium 180-305	2.00	pcs

Control panel (A000140)

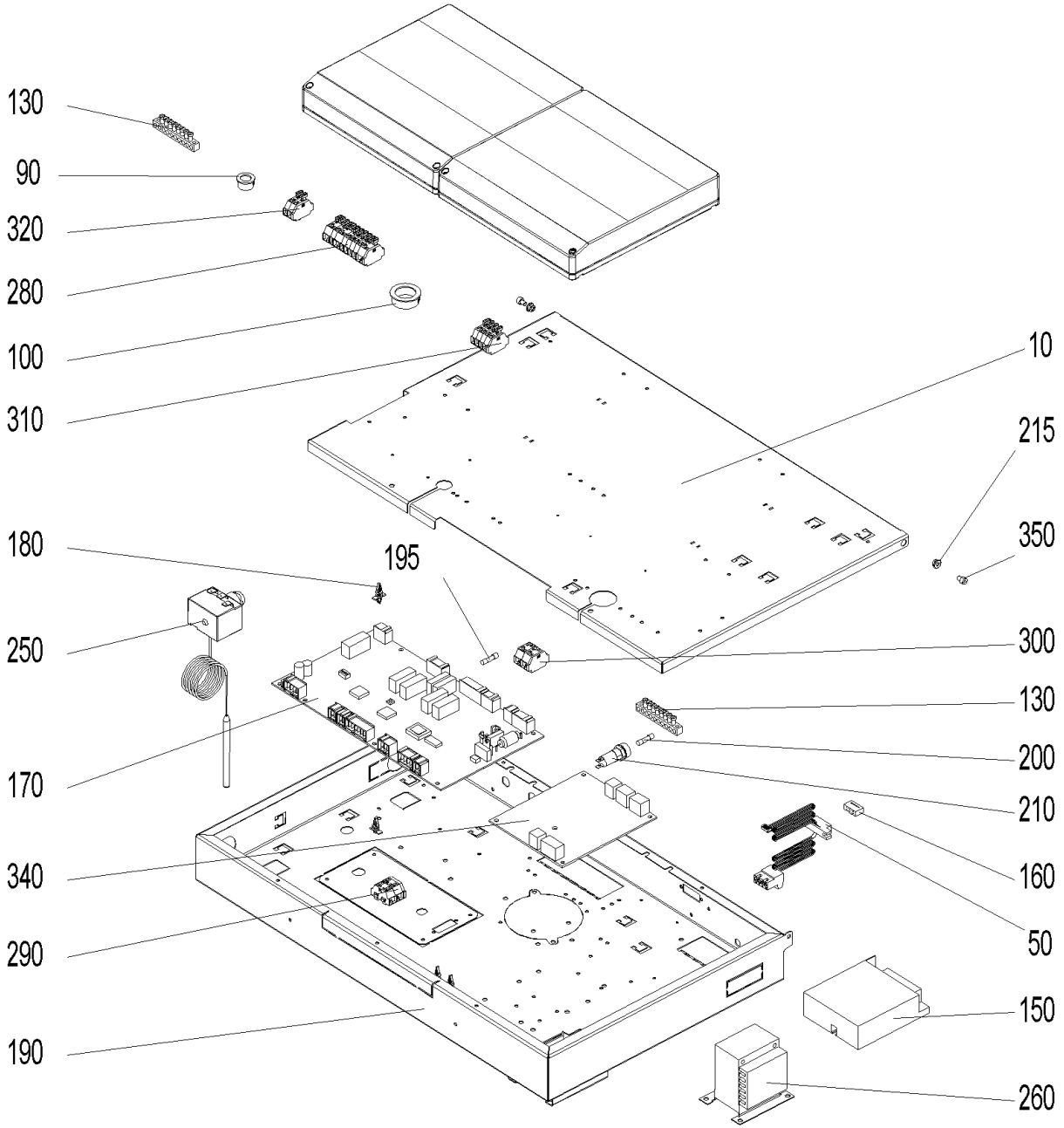

Control panel (A000140)

Item no.	Article no.	Description	Quantity	Unit
10	053779	de: Deckel Schaltfeld BW2T, LWPT	1.00	pcs
20	054311	de: Flachbandkabel vorm. LWPT	1.00	pcs
30	054313	de: Fühlerset vorm. LWPT	1.00	pcs
40	054155	de: Zuleitungskabel LWPT	1.00	pcs
50	009605	de: Kabel - LON LWPT, BWXL2, BW2, BW2T	1.00	pcs
60	002059	Power supply cable (not illustrated)	1.00	pcs
70	007165	Lambda sensor cable (not illustrated)	1.00	pcs
80	048419	Draught fan cable (not illustrated)	1.00	pcs
90	009542	Cable feed-through	1.00	pcs
100	009536	de: Kabeldurchführung 2160 schwarz Ø 28	1.00	pcs
120	054315	de: Kabelsatz 230V SB LWPT	1.00	pcs
130	009929	Terminal bar MS 8-pin 8x8mm for VarioWIN,FireWIN, BioWIN XL 35-60	2.00	pcs
140	041430	Mains connection socket 3-pin for MIRA,ETX,PMX,BioWIN10-26,LogWIN Premium 180-505,EasyWIN Premium 180,BioWIN XL 35-60, FireWIN	1.00	pcs
150	051645	Power supply unit 12V	1.00	pcs
160	005784	Pin connector (not illustrated)	1.00	pcs
170	011999	FMF PCB for LogWIN Premium 180-505	1.00	pcs
180	007609	PCB holder	12.00	pcs
190	052994	de: Schaltfeld Unterteil BW2T, LWPT	1.00	pcs
195	006900	Fuse 1 A T 5x20 ceramic tube	2.00	pcs
200	003228	6.3A fuse (not illustrated)	2.00	pcs
210	003663	Fuse holder	1.00	pcs
215	016564	de: Sperrzahnmutter M4 verzinkt	1.00	pcs

Control panel (A000140)

Item no.	Article no.	Description	Quantity	Unit
220	009318	Plug ST18/3S sw wie for LogWIN Premium 180-505	1.00	pcs
230	502186	MES009M Immersion sensor	1.00	pcs
240	007626	Thermocouple	1.00	pcs
250	005672	Thermostat LS1+100-6U	1.00	pcs
260	007096	Transformer for O2 sensor 18VA for LogWIN Premium 180-505	1.00	pcs
270	054314	de: Trafo O2-Sonde vorm. LWPT	1.00	pcs
280	009891	Wago terminal block 261; 11-pin safety 1-11 for FireWIN, VarioWIN	1.00	pcs
290	006833	Wago terminal block 261; 4-pin "12V GND"	1.00	pcs
300	006834	Wago terminal block 261; 4-pin "safety 1-4"	1.00	pcs
310	006835	de: Wagoblock 261 5tlg."ext. Wärme" 1-4 PMX, BW2T, LWPT	1.00	pcs
320	009948	Wago terminal block 261; 2-pin WMS 1-2, 3-piece for VarioWIN, FireWIN	1.00	pcs
330	009334	de: Zugentlastung 3 pol.f.Bu. Z7.419.2153.OSW	1.00	pcs
340	007095	Extra PCB for O2-mesure or pumping rotation speed control for BioWIN cascade, LogWIN Premium 180-505	1.00	pcs
350	016782	de: Zylinderschraube m. Innensechskant ISO 4762 - M 4 x 10 - 8.8 - verzinkt (DIN 912)	1.00	pcs

Boiler (A000136)

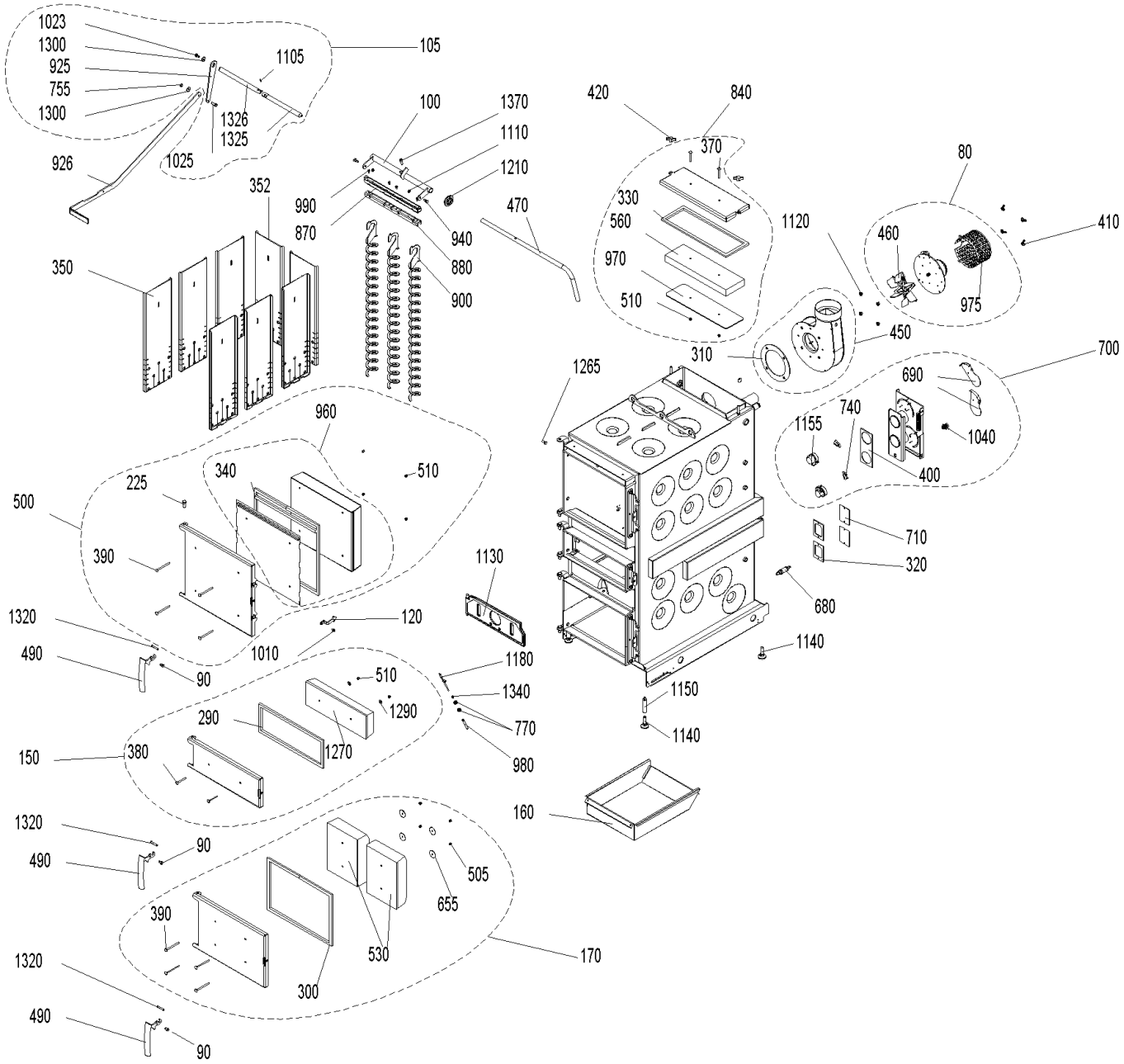

Boiler (A000136)

Item no.	Article no.	Description	Quantity	Unit
80	051661	Flue gas blower, complete for LWK	1.00	pcs
90	048881	Axle for door handle CK45	2.00	pcs
100	046328	Axle for cleaning heating surfaces	1.00	pcs
120	052728	de: Anlüftsicherungshaken rot LWPT	1.00	pcs
150	051564	Lighting door, complete	1.00	pcs
160	045419	Ash pan LWP18-50, LWK	1.00	pcs
170	051563	Ash door, complete LWK	1.00	pcs
225	033104	Door mounting bolt ISO 2341-A - 12x32	1.00	pcs
290	046267	Lighting door seal LWP18-50, LW	1.00	pcs
300	046268	Ash door seal LWP18-50, LWK	1.00	pcs
310	050825	Blower seal LWK	1.00	pcs
320	009378	Seal for vent cover LWP18-50, LWK	4.00	pcs
330	051567	Seal for cleaning cover LWK	1.00	pcs
340	051568	Heating door seal set LWK	1.00	pcs
350	045431	Hook-in plate for LogWIN Premium 180-505	8.00	pcs
352	045431	Hook-in plate for LogWIN Premium 180-505	8.00	pcs
370	016178	Round-head screw M6x55	2.00	pcs
380	016186	Round-head screw M6x60	2.00	pcs
390	016190	Round-head screw M6x90	4.00	pcs
400	009305	Flange seal LWP18-50, LWK	1.00	pcs
410	019410	Wing nut M6	4.00	pcs
420	007366	Wing nut M8	2.00	pcs

Boiler (A000136)

Item no.	Article no.	Description	Quantity	Unit
450	051577	Blower box, complete LWK	1.00	pcs
460	053032	Blower wheel	1.00	pcs
470	045447	Handle for cleaning heating surfaces for LogWIN Premium 180-305	1.00	pcs
490	048811	Boiler handle	3.00	pcs
500	051579	Heating door, complete LWK	1.00	pcs
505	016192	Cap nut	4.00	pcs
510	025968	Cap nut M6	1.00	pcs
530	050585	Insulating stone AT LWK	2.00	pcs
560	050542	Insulating stone for cleaning cover LWK	1.00	pcs
655	016191	Washer M6 4x40x1,5	4.00	pcs
680	051646	Lambda sensor	1.00	pcs
690	040032	Air choke	2.00	pcs
700	054194	de: Luftregler kpl. mont. LWPT	1.00	pcs
710	046338	Vent cover	4.00	pcs
740	009277	Air control microswitch	2.00	pcs
770	031156	Hexagon nut M10 DIN 439	2.00	pcs
840	051663	Cleaning cover LWK	1.00	pcs
870	046325	Top cleaning profile for LogWIN Premium 180-305	1.00	pcs
880	046323	Bottom cleaning profile for LogWIN Premium 180-305	1.00	pcs
900	046322	Cleaning auger for LogWIN Premium 180-505	4.00	pcs
940	006756	Screw M6 for heating surface cleaning for PMX,BioWIN 10-26,FireWIN, BioWIN XL 35-60, LogWIN Premium 180-505	2.00	pcs
960	053240	Heating door protection plate LWK	1.00	pcs

Boiler (A000136)

Item no.	Article no.	Description	Quantity	Unit
970	051666	Cleaning cover protection plate LWK	1.00	pcs
975	010882	Flue gas blower protection hood LWK	1.00	pcs
980	051231	Thermocontrol sensor protective tube LWK	1.00	pcs
990	031545	Hexagon screw M5x12 DIN 7500 (not ilustrated)	1.00	pcs
1010	051671	Door screw M8	1.00	pcs
1040	017205	Hexagon screws M12x25-8.8	1.00	pcs
1110	016566	Hexagon nut with flange and gearing M6	1.00	pcs
1120	016553	Hexagon nut M8 with flange and gearing	4.00	pcs
1130	051162	Vertical grate LWK/LWP	1.00	pcs
1140	009994	Foot M12X40 JTB38 for HMX, EasyWIN Klassik/Premium 180, LogWIN Premium 180-505	4.00	pcs
1150	007453	Leg extension for LogWIN Premium 180-505, EasyWIN Klassik/Premium 180	2.00	pcs
1155	040429	Servomotor for HMX, SilvaWIN, LogWIN Premium 180-505	2.00	pcs
1180	007626	Thermocouple	1.00	pcs
1210	048812	Grommet for EasyWIN, LogWIN Premium 180-505	1.00	pcs
1265	051671	Door screw M8	1.00	pcs
1270	050590	Door stone for lighting door LWK	1.00	pcs
1290	031753	Disc 6 ISO 7093	1.00	pcs
1320	050568	Locking axle LWK	3.00	pcs
1340	007164	Tension spring	1.00	pcs
1370	017046	Cyl. screw M 8X30	1.00	pcs

Cladding (A000138)

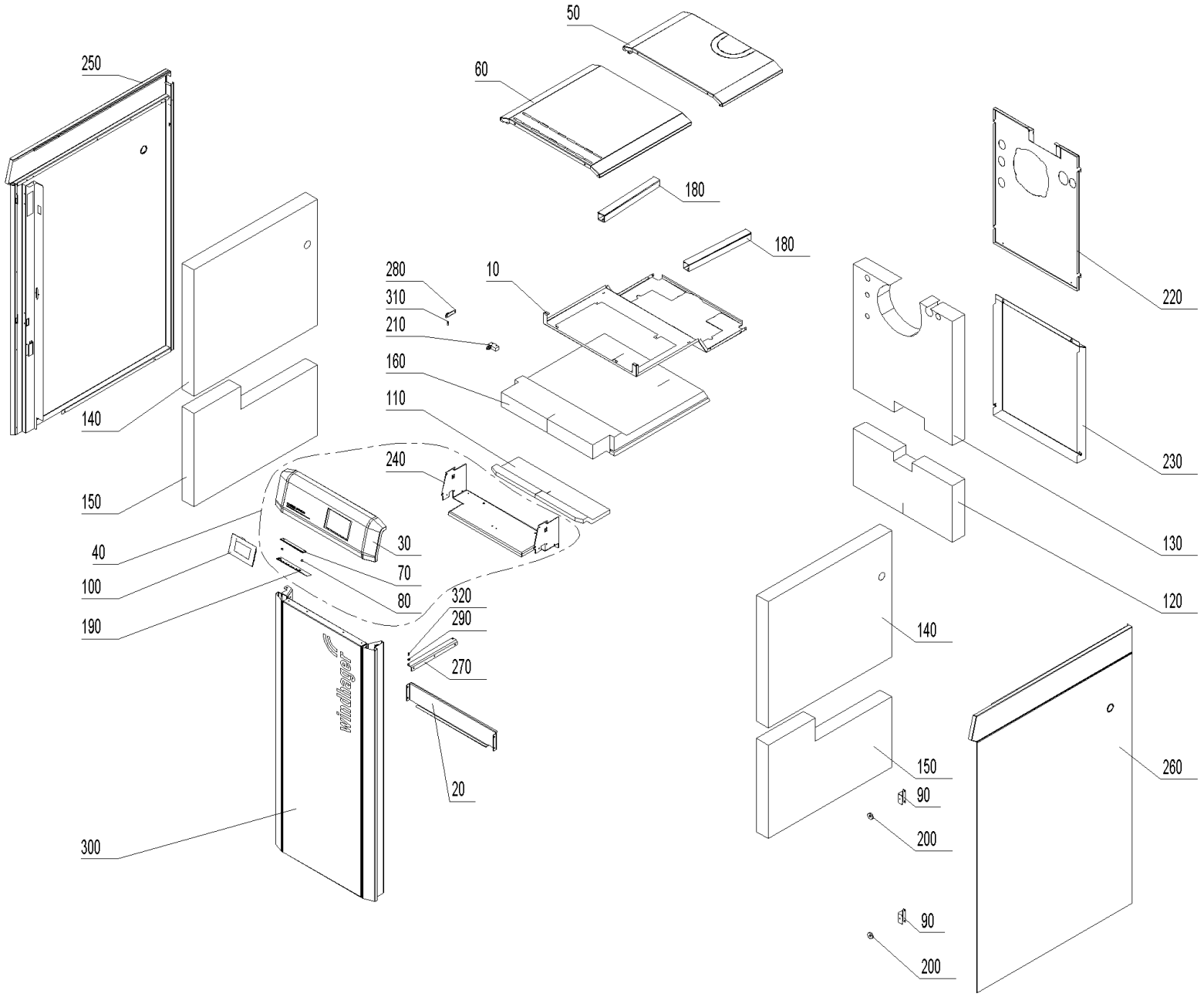

Cladding (A000138)

Item no.	Article no.	Description	Quantity	Unit
10	053773	de: Abdeckblech Isolierung oben LWPT	1.00	pcs
20	051223	Sensor cover	1.00	pcs
30	054137	de: Bedienfeld kpl. LWPT 18-30	1.00	pcs
40	054150	LWP16 Bedienfeld zu LogWIN Premium 180T-305T	1.00	pcs
50	054105	de: Deckel hinten LWPT 18-36	1.00	pcs
60	054104	de: Deckel vorne LWPT 18-36	1.00	pcs
70	007196	de: Diffuser LED-Streifen LWPT	1.00	pcs
80	009694	de: Distanzhülse Ø8xØ4,3x5,4	2.00	pcs
90	053753	de: Haltebügel Magnet LWPT 18-36	2.00	pcs
100	001009	INF8 MES INFINITY InfoWIN Touch	1.00	pcs
110	054183	de: Isolierung Bedienfeld LWPT 18-30	1.00	pcs
120	051216	Bottom rear insulation LWK	1.00	pcs
130	054156	de: Isolierung hinten oben LWPT 18-30	1.00	pcs
140	053989	de: Isolierung links/rechts oben LWPT 18-50	2.00	pcs
150	051222	Bottom left/right insulation	2.00	pcs
160	053985	de: Isolierung oben LWPT 18-30	1.00	pcs
170	009606	de: Kabel InfoWIN Touch auf LED-Streifen	1.00	pcs
180	050837	Cable duct	2.00	pcs
190	012990	de: LED - Balken LWPT	1.00	pcs
200	001761	de: Magnet Ø31 gummiummantelt	2.00	pcs
210	007128	Microswitch Z-15GQ-B for LogWIN Premium 180-505, BioWIN XL 35-60	1.00	pcs
220	051552	de: Rückwand oben LWPT 18-30	1.00	pcs

Cladding (A000138)

Item no.	Article no.	Description	Quantity	Unit
230	050839	Bottom rear panel LWK	1.00	pcs
240	053797	de: Schwelgasführung LWPT 18-36	1.00	pcs
250	054135	de: Seitenwand links LWPT 18-50	1.00	pcs
260	054136	de: Seitenwand rechts LWPT 18-50	1.00	pcs
270	051911	de: Türangel unten LWPT	1.00	pcs
280	051909	de: Türlager oben LWPT	1.00	pcs
290	018309	Disc 5 DIN134	1.00	pcs
300	054133	de: Verkleidungstür kpl. LWPT 18-30	1.00	pcs
310	015507	Dog point screw	1.00	pcs
320	033092	de: Zapfenschrauben M5X5	1.00	pcs

cleaning equipment (A000143)

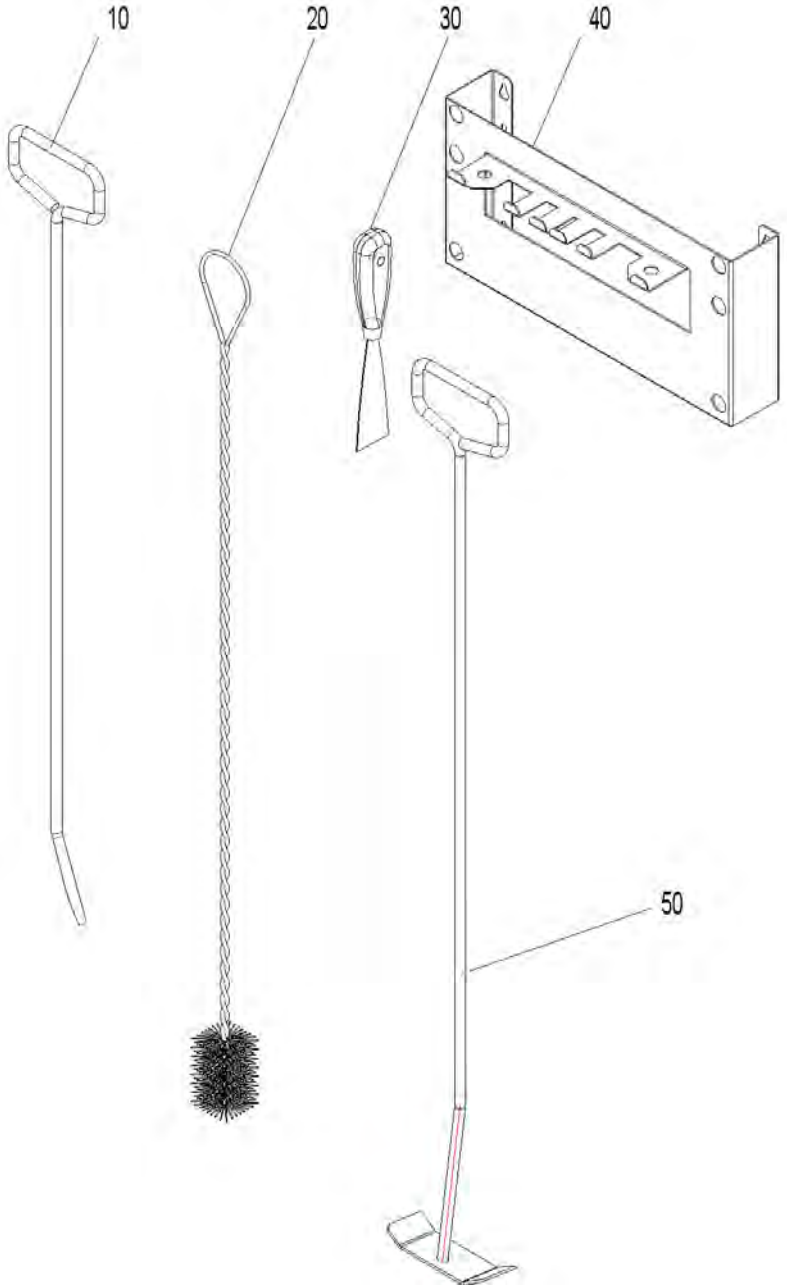

cleaning equipment (A000143)

Item no.	Article no.	Description	Quantity	Unit
10	080664	FAX192 Poker for FAX,HMX,SilvaWIN,FKX,EasyWIN Klassik/Premium 180,LogWIN Premium 180-505	1.00	pcs
20	003088	GWX992 Cleaning brush 950x45mm/45x70 mm for GWX, LogWIN Premium 180-505, EasyWIN Klassik/Premium 180	1.00	pcs
30	009540	Spatula	1.00	pcs
40	042743	Holder for cleaning equipments for VarioWIN, LogWIN Premium 180-505,SilvaWIN,BioWIN XL35-60,EasWIN Klassik/Premium 180	1.00	pcs
50	040328	Cleaning rake for HMX,PMX, EasyWIN Klassik/Premium 180, LogWIN Premium 180-505	1.00	pcs

combustion chamber (A000141)

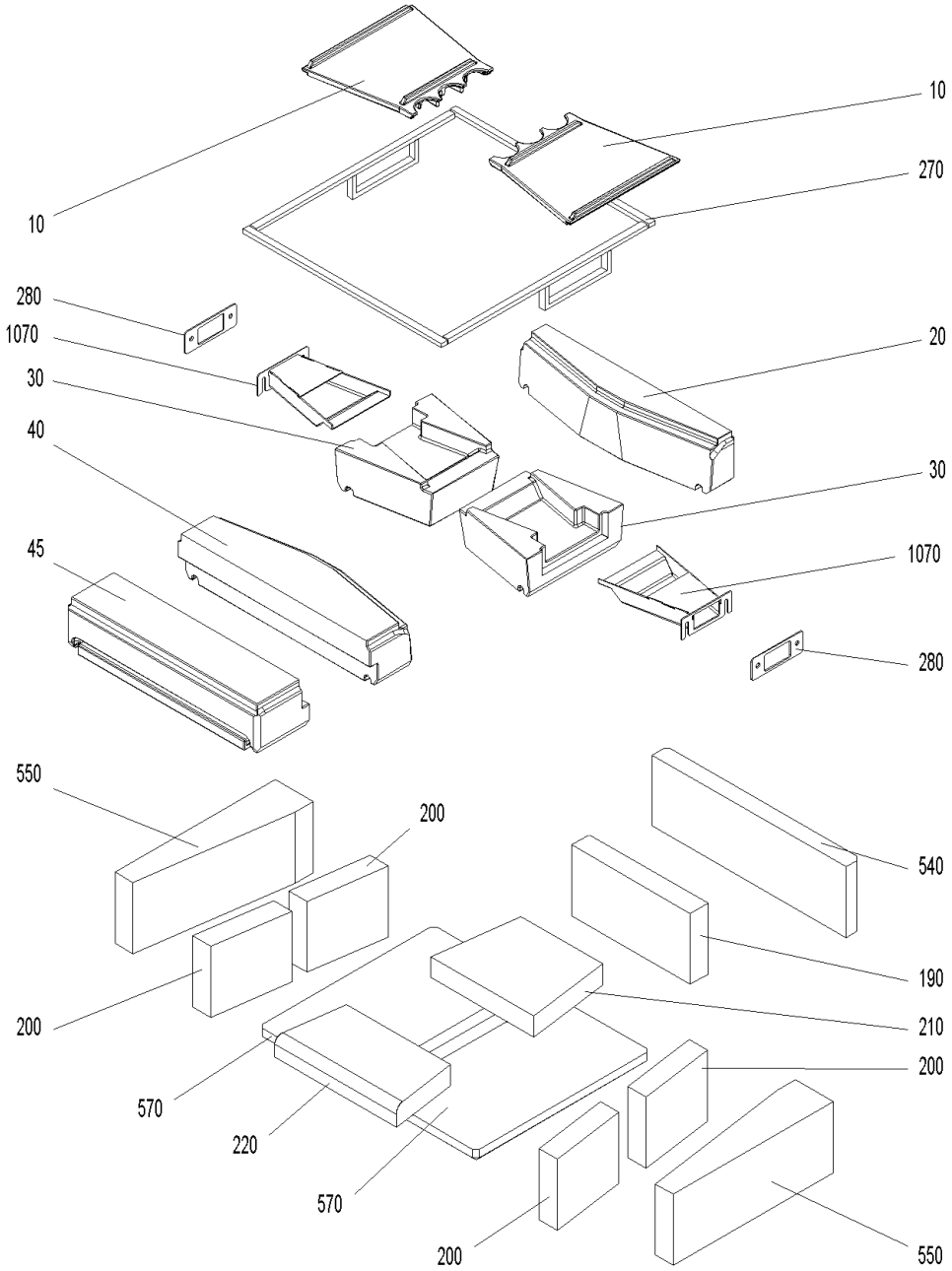

combustion chamber (A000141)

Item no.	Article no.	Description	Quantity	Unit
10	007392	Burning plate LWP/LWK	1.00	pcs
20	007397	Rear burning stone	1.00	pcs
30	007388	Burning stone left/right LWK/LWP	2.00	pcs
40	007377	Front burning stone	1.00	pcs
190	007383	Rear combustion chamber stone LWP18-30, LWK	1.00	pcs
200	051233	Combustion chamber stone left/right LWK	4.00	pcs
210	007384	Bottom rear combustion chamber stone LWP18-30	1.00	pcs
220	007385	Bottom front combustion chamber stone LWP18-30	1.00	pcs
270	046119	Rope seal kit for burning stones LWP18-30	1.00	pcs
280	007391	Seal for secondary air nozzle LWP180-305	2.00	pcs
540	007380	Rear insulating stone for LogWIN Premium 180-305	1.00	pcs
550	051234	Insulating stone left/right LWK	2.00	pcs
570	051236	Bottom insulating stone LWK	2.00	pcs
1070	045326	Secondary air nozzle complete for LogWIN Premium 180-305	2.00	pcs

Control panel (A000140)

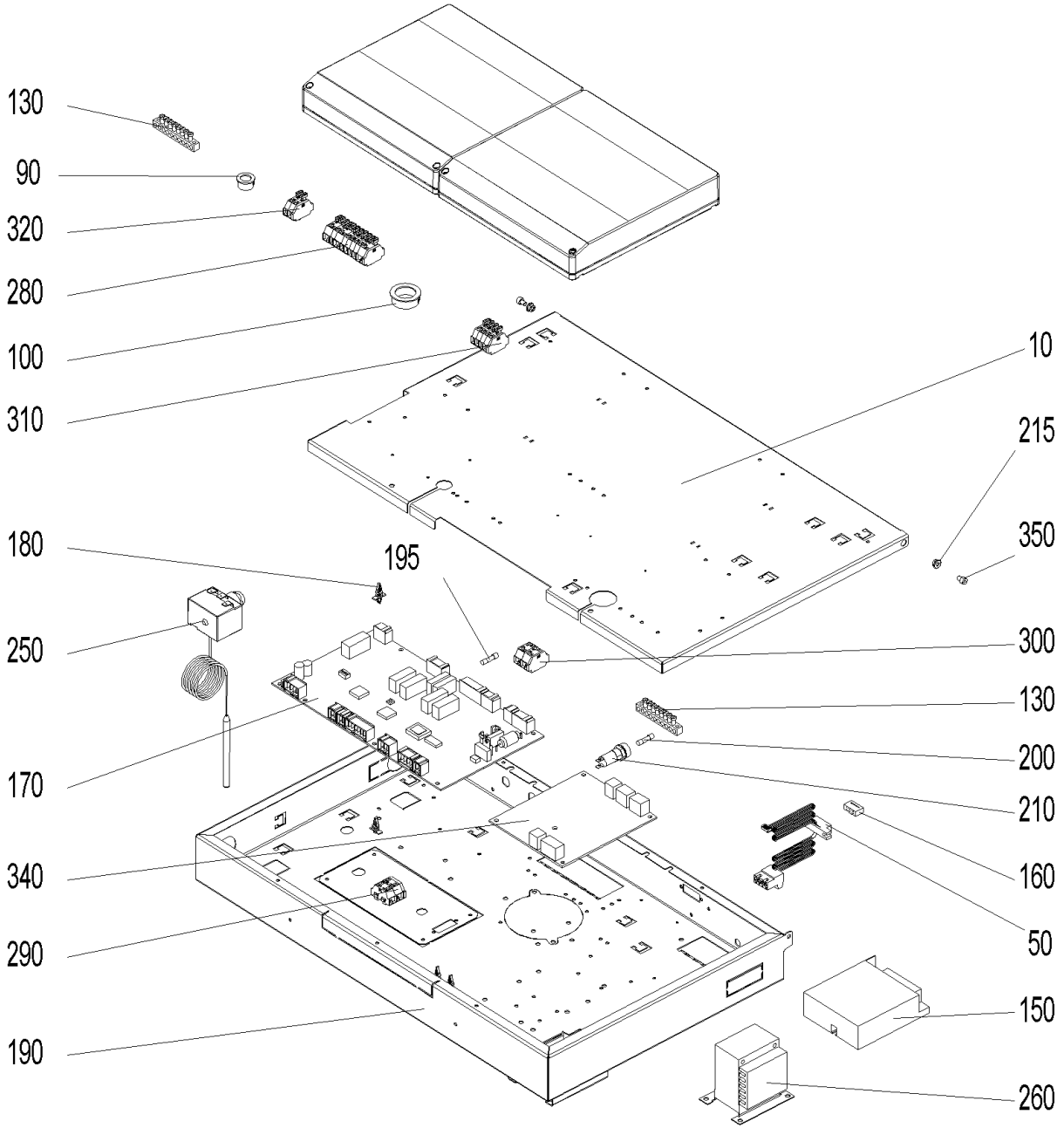

Control panel (A000140)

Item no.	Article no.	Description	Quantity	Unit
10	053779	de: Deckel Schaltfeld BW2T, LWPT	1.00	pcs
20	054311	de: Flachbandkabel vorm. LWPT	1.00	pcs
30	054313	de: Fühlerset vorm. LWPT	1.00	pcs
40	054155	de: Zuleitungskabel LWPT	1.00	pcs
50	009605	de: Kabel - LON LWPT, BWXL2, BW2, BW2T	1.00	pcs
60	002059	Power supply cable (not illustrated)	1.00	pcs
70	007165	Lambda sensor cable (not illustrated)	1.00	pcs
80	048419	Draught fan cable (not illustrated)	1.00	pcs
90	009542	Cable feed-through	1.00	pcs
100	009536	de: Kabeldurchführung 2160 schwarz Ø 28	1.00	pcs
120	054315	de: Kabelsatz 230V SB LWPT	1.00	pcs
130	009929	Terminal bar MS 8-pin 8x8mm for VarioWIN,FireWIN, BioWIN XL 35-60	2.00	pcs
140	041430	Mains connection socket 3-pin for MIRA,ETX,PMX,BioWIN10-26,LogWIN Premium 180-505,EasyWIN Premium 180,BioWIN XL 35-60, FireWIN	1.00	pcs
150	051645	Power supply unit 12V	1.00	pcs
160	005784	Pin connector (not illustrated)	1.00	pcs
170	011999	FMF PCB for LogWIN Premium 180-505	1.00	pcs
180	007609	PCB holder	12.00	pcs
190	052994	de: Schaltfeld Unterteil BW2T, LWPT	1.00	pcs
195	006900	Fuse 1 A T 5x20 ceramic tube	2.00	pcs
200	003228	6.3A fuse (not illustrated)	2.00	pcs
210	003663	Fuse holder	1.00	pcs
215	016564	de: Sperrzahnmutter M4 verzinkt	1.00	pcs

Control panel (A000140)

Item no.	Article no.	Description	Quantity	Unit
220	009318	Plug ST18/3S sw wie for LogWIN Premium 180-505	1.00	pcs
230	502186	MES009M Immersion sensor	1.00	pcs
240	007626	Thermocouple	1.00	pcs
250	005672	Thermostat LS1+100-6U	1.00	pcs
260	007096	Transformer for O2 sensor 18VA for LogWIN Premium 180-505	1.00	pcs
270	054314	de: Trafo O2-Sonde vorm. LWPT	1.00	pcs
280	009891	Wago terminal block 261; 11-pin safety 1-11 for FireWIN, VarioWIN	1.00	pcs
290	006833	Wago terminal block 261; 4-pin "12V GND"	1.00	pcs
300	006834	Wago terminal block 261; 4-pin "safety 1-4"	1.00	pcs
310	006835	de: Wagoblock 261 5tlg."ext. Wärme" 1-4 PMX, BW2T, LWPT	1.00	pcs
320	009948	Wago terminal block 261; 2-pin WMS 1-2, 3-piece for VarioWIN, FireWIN	1.00	pcs
330	009334	de: Zugentlastung 3 pol.f.Bu. Z7.419.2153.OSW	1.00	pcs
340	007095	Extra PCB for O2-mesure or pumping rotation speed control for BioWIN cascade, LogWIN Premium 180-505	1.00	pcs
350	016782	de: Zylinderschraube m. Innensechskant ISO 4762 - M 4 x 10 - 8.8 - verzinkt (DIN 912)	1.00	pcs

Boiler (A000136)

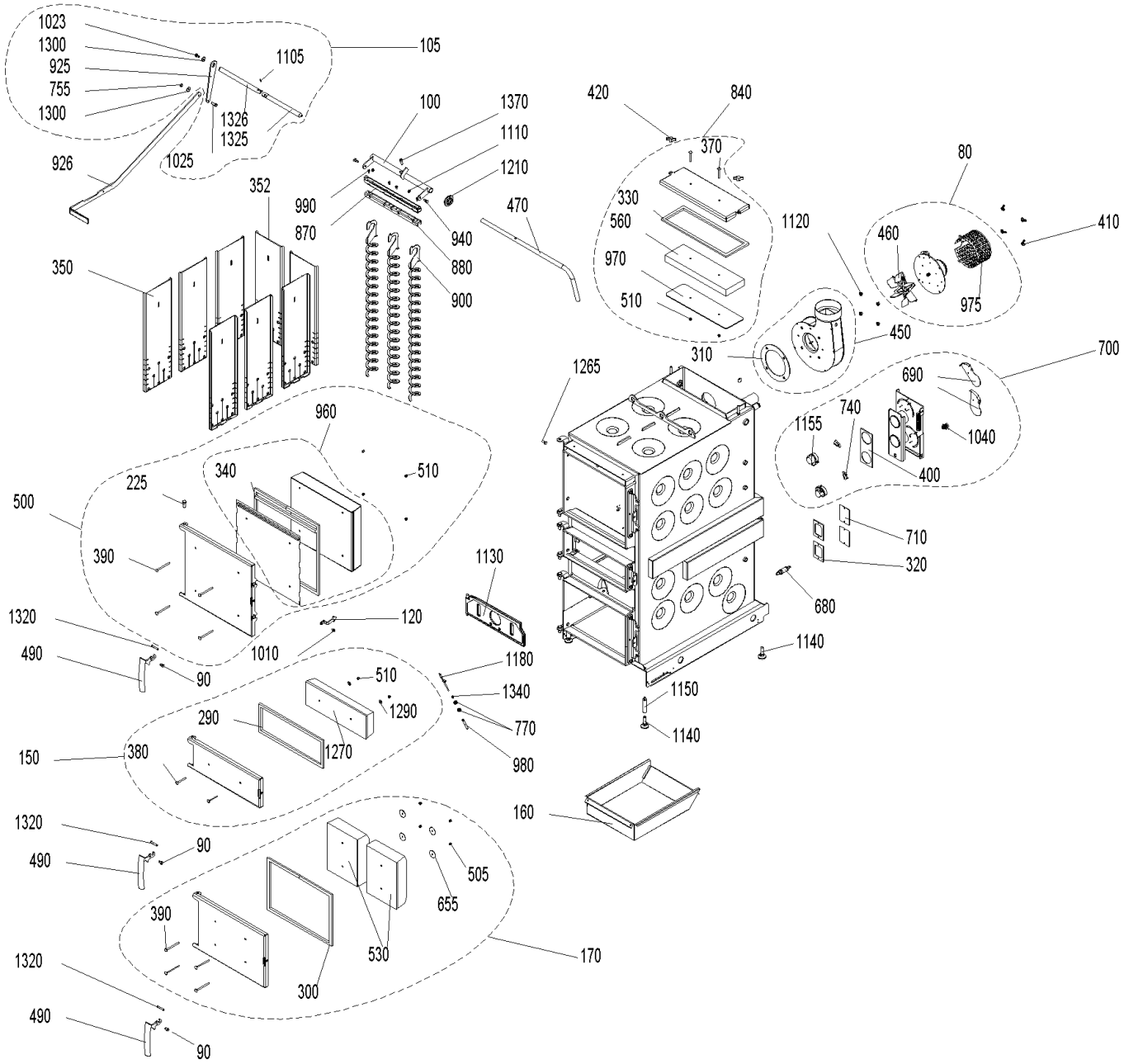

Boiler (A000136)

Item no.	Article no.	Description	Quantity	Unit
80	051661	Flue gas blower, complete for LWK	1.00	pcs
90	048881	Axle for door handle CK45	2.00	pcs
100	046328	Axle for cleaning heating surfaces	1.00	pcs
120	052728	de: Anlüftsicherungshaken rot LWPT	1.00	pcs
150	051564	Lighting door, complete	1.00	pcs
160	045419	Ash pan LWP18-50, LWK	1.00	pcs
170	051563	Ash door, complete LWK	1.00	pcs
225	033104	Door mounting bolt ISO 2341-A - 12x32	1.00	pcs
290	046267	Lighting door seal LWP18-50, LW	1.00	pcs
300	046268	Ash door seal LWP18-50, LWK	1.00	pcs
310	050825	Blower seal LWK	1.00	pcs
320	009378	Seal for vent cover LWP18-50, LWK	4.00	pcs
330	051567	Seal for cleaning cover LWK	1.00	pcs
340	051568	Heating door seal set LWK	1.00	pcs
350	045431	Hook-in plate for LogWIN Premium 180-505	8.00	pcs
352	045431	Hook-in plate for LogWIN Premium 180-505	8.00	pcs
370	016178	Round-head screw M6x55	2.00	pcs
380	016186	Round-head screw M6x60	2.00	pcs
390	016190	Round-head screw M6x90	4.00	pcs
400	009305	Flange seal LWP18-50, LWK	1.00	pcs
410	019410	Wing nut M6	4.00	pcs
420	007366	Wing nut M8	2.00	pcs

Boiler (A000136)

Item no.	Article no.	Description	Quantity	Unit
450	051577	Blower box, complete LWK	1.00	pcs
460	053032	Blower wheel	1.00	pcs
470	045447	Handle for cleaning heating surfaces for LogWIN Premium 180-305	1.00	pcs
490	048811	Boiler handle	3.00	pcs
500	051579	Heating door, complete LWK	1.00	pcs
505	016192	Cap nut	4.00	pcs
510	025968	Cap nut M6	1.00	pcs
530	050585	Insulating stone AT LWK	2.00	pcs
560	050542	Insulating stone for cleaning cover LWK	1.00	pcs
655	016191	Washer M6 4x40x1,5	4.00	pcs
680	051646	Lambda sensor	1.00	pcs
690	040032	Air choke	2.00	pcs
700	054194	de: Luftregler kpl. mont. LWPT	1.00	pcs
710	046338	Vent cover	4.00	pcs
740	009277	Air control microswitch	2.00	pcs
770	031156	Hexagon nut M10 DIN 439	2.00	pcs
840	051663	Cleaning cover LWK	1.00	pcs
870	046325	Top cleaning profile for LogWIN Premium 180-305	1.00	pcs
880	046323	Bottom cleaning profile for LogWIN Premium 180-305	1.00	pcs
900	046322	Cleaning auger for LogWIN Premium 180-505	4.00	pcs
940	006756	Screw M6 for heating surface cleaning for PMX,BioWIN 10-26,FireWIN, BioWIN XL 35-60, LogWIN Premium 180-505	2.00	pcs
960	053240	Heating door protection plate LWK	1.00	pcs

Boiler (A000136)

Item no.	Article no.	Description	Quantity	Unit
970	051666	Cleaning cover protection plate LWK	1.00	pcs
975	010882	Flue gas blower protection hood LWK	1.00	pcs
980	051231	Thermocontrol sensor protective tube LWK	1.00	pcs
990	031545	Hexagon screw M5x12 DIN 7500 (not ilustrated)	1.00	pcs
1010	051671	Door screw M8	1.00	pcs
1040	017205	Hexagon screws M12x25-8.8	1.00	pcs
1110	016566	Hexagon nut with flange and gearing M6	1.00	pcs
1120	016553	Hexagon nut M8 with flange and gearing	4.00	pcs
1130	051162	Vertical grate LWK/LWP	1.00	pcs
1140	009994	Foot M12X40 JTB38 for HMX, EasyWIN Klassik/Premium 180, LogWIN Premium 180-505	4.00	pcs
1150	007453	Leg extension for LogWIN Premium 180-505, EasyWIN Klassik/Premium 180	2.00	pcs
1155	040429	Servomotor for HMX, SilvaWIN, LogWIN Premium 180-505	2.00	pcs
1180	007626	Thermocouple	1.00	pcs
1210	048812	Grommet for EasyWIN, LogWIN Premium 180-505	1.00	pcs
1265	051671	Door screw M8	1.00	pcs
1270	050590	Door stone for lighting door LWK	1.00	pcs
1290	031753	Disc 6 ISO 7093	1.00	pcs
1320	050568	Locking axle LWK	3.00	pcs
1340	007164	Tension spring	1.00	pcs
1370	017046	Cyl. screw M 8X30	1.00	pcs

Cladding (A000138)

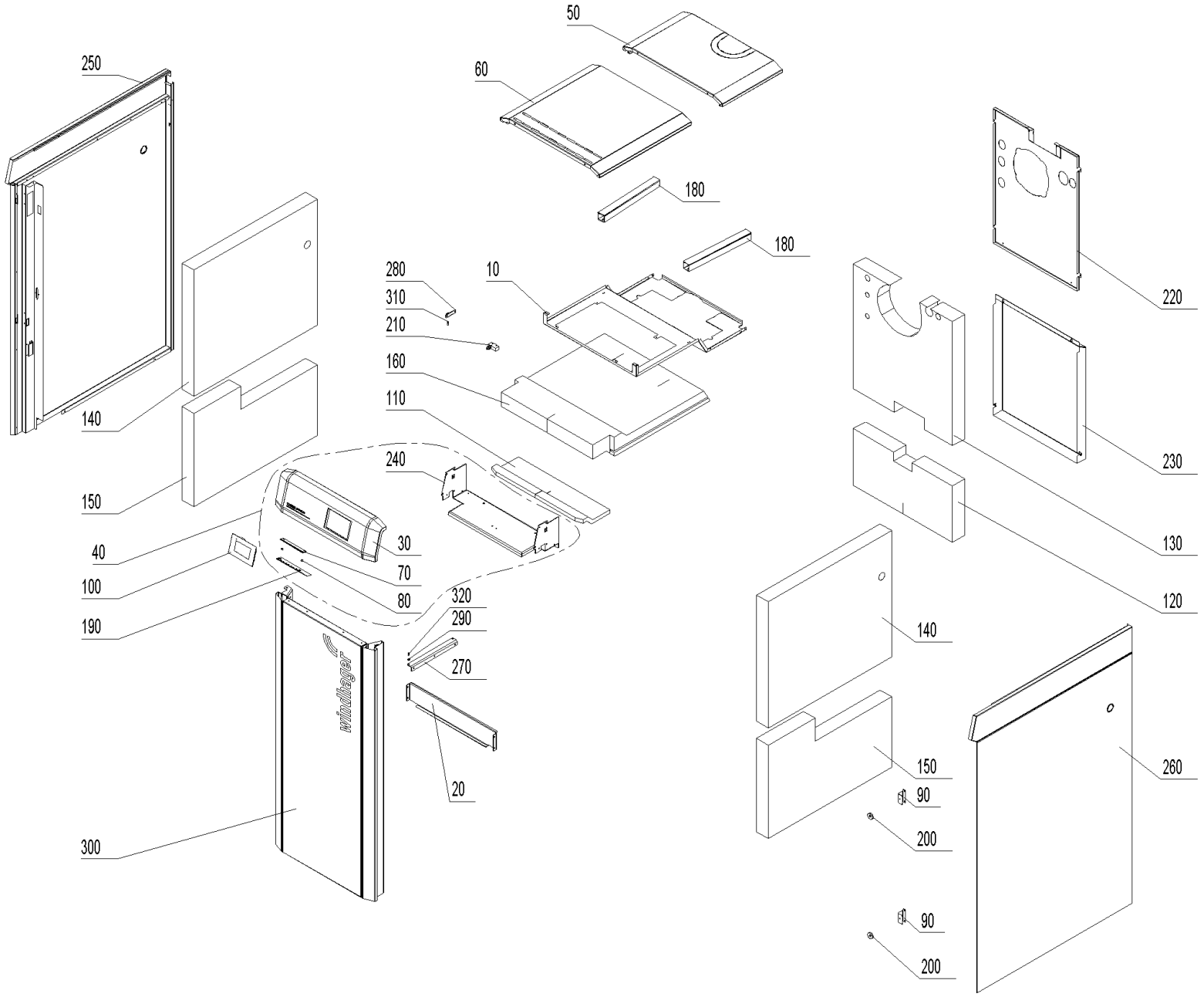

Cladding (A000138)

Item no.	Article no.	Description	Quantity	Unit
10	053773	de: Abdeckblech Isolierung oben LWPT	1.00	pcs
20	051223	Sensor cover	1.00	pcs
30	054137	de: Bedienfeld kpl. LWPT 18-30	1.00	pcs
40	054150	LWP16 Bedienfeld zu LogWIN Premium 180T-305T	1.00	pcs
50	054105	de: Deckel hinten LWPT 18-36	1.00	pcs
60	054104	de: Deckel vorne LWPT 18-36	1.00	pcs
70	007196	de: Diffuser LED-Streifen LWPT	1.00	pcs
80	009694	de: Distanzhülse Ø8xØ4,3x5,4	2.00	pcs
90	053753	de: Haltebügel Magnet LWPT 18-36	2.00	pcs
100	001009	INF8 MES INFINITY InfoWIN Touch	1.00	pcs
110	054183	de: Isolierung Bedienfeld LWPT 18-30	1.00	pcs
120	051216	Bottom rear insulation LWK	1.00	pcs
130	054156	de: Isolierung hinten oben LWPT 18-30	1.00	pcs
140	053989	de: Isolierung links/rechts oben LWPT 18-50	2.00	pcs
150	051222	Bottom left/right insulation	2.00	pcs
160	053985	de: Isolierung oben LWPT 18-30	1.00	pcs
170	009606	de: Kabel InfoWIN Touch auf LED-Streifen	1.00	pcs
180	050837	Cable duct	2.00	pcs
190	012990	de: LED - Balken LWPT	1.00	pcs
200	001761	de: Magnet Ø31 gummiummantelt	2.00	pcs
210	007128	Microswitch Z-15GQ-B for LogWIN Premium 180-505, BioWIN XL 35-60	1.00	pcs
220	051552	de: Rückwand oben LWPT 18-30	1.00	pcs

Cladding (A000138)

Item no.	Article no.	Description	Quantity	Unit
230	050839	Bottom rear panel LWK	1.00	pcs
240	053797	de: Schwelgasführung LWPT 18-36	1.00	pcs
250	054135	de: Seitenwand links LWPT 18-50	1.00	pcs
260	054136	de: Seitenwand rechts LWPT 18-50	1.00	pcs
270	051911	de: Türangel unten LWPT	1.00	pcs
280	051909	de: Türlager oben LWPT	1.00	pcs
290	018309	Disc 5 DIN134	1.00	pcs
300	054133	de: Verkleidungstür kpl. LWPT 18-30	1.00	pcs
310	015507	Dog point screw	1.00	pcs
320	033092	de: Zapfenschrauben M5X5	1.00	pcs

cleaning equipment (A000143)

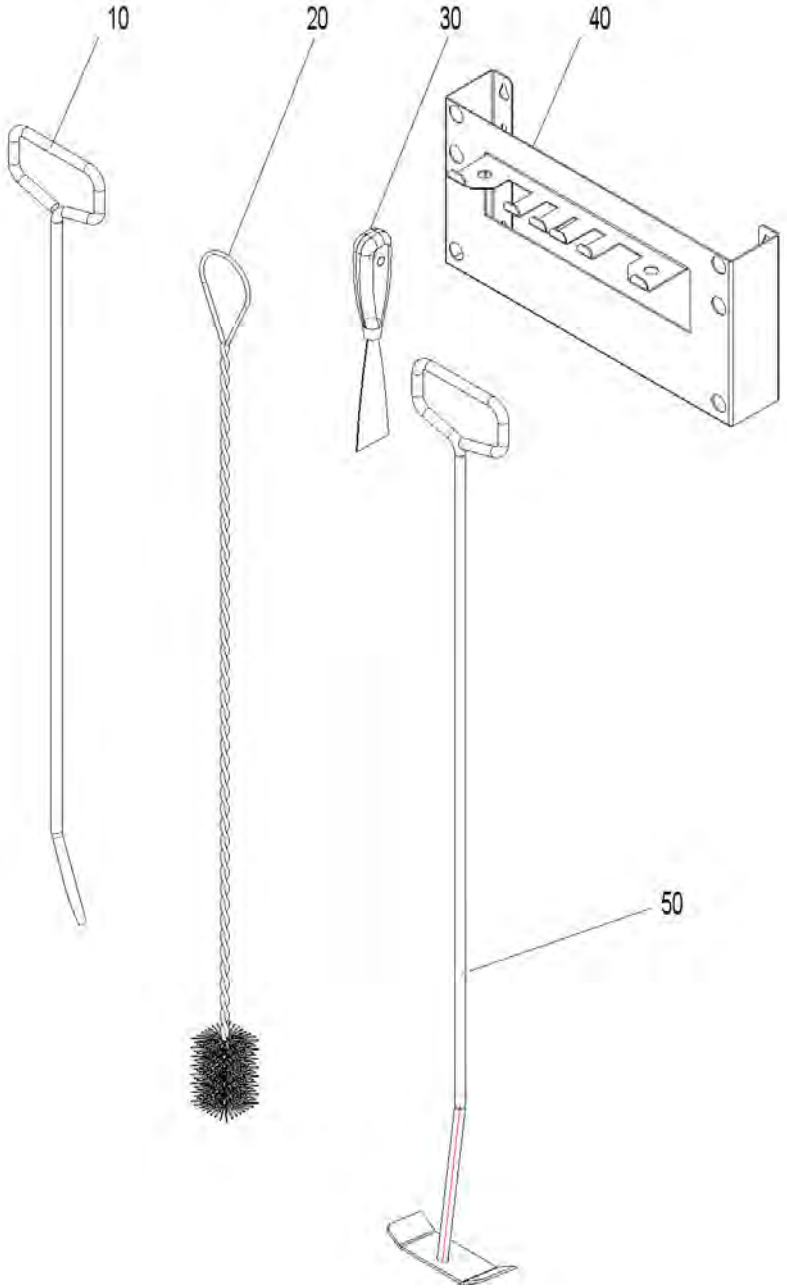

cleaning equipment (A000143)

Item no.	Article no.	Description	Quantity	Unit
10	080664	FAX192 Poker for FAX,HMX,SilvaWIN,FKX,EasyWIN Klassik/Premium 180,LogWIN Premium 180-505	1.00	pcs
20	003088	GWX992 Cleaning brush 950x45mm/45x70 mm for GWX, LogWIN Premium 180-505, EasyWIN Klassik/Premium 180	1.00	pcs
30	009540	Spatula	1.00	pcs
40	042743	Holder for cleaning equipments for VarioWIN, LogWIN Premium 180-505,SilvaWIN,BioWIN XL35-60,EasWIN Klassik/Premium 180	1.00	pcs
50	040328	Cleaning rake for HMX,PMX, EasyWIN Klassik/Premium 180, LogWIN Premium 180-505	1.00	pcs

combustion chamber (A000141)

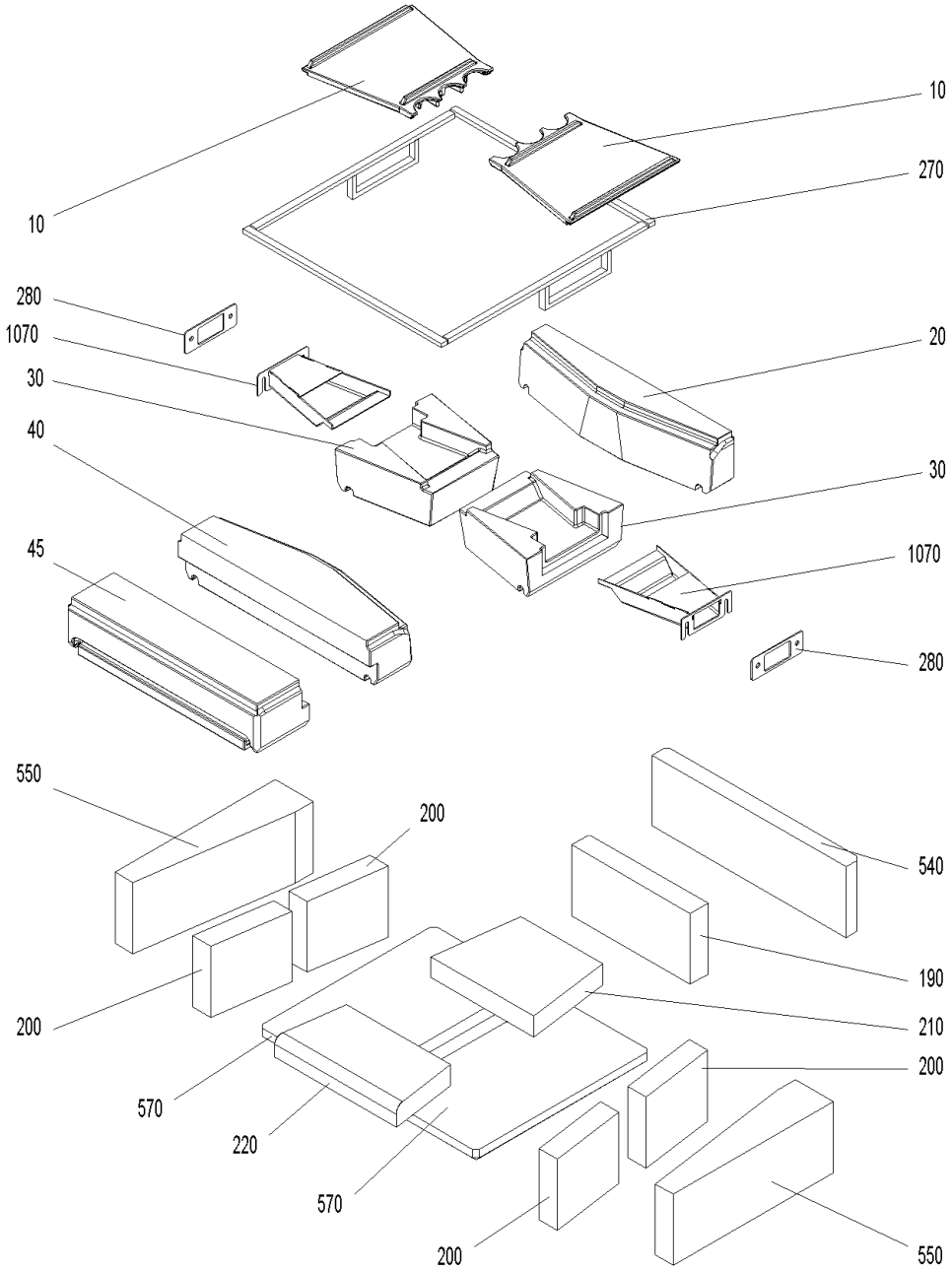

combustion chamber (A000141)

Item no.	Article no.	Description	Quantity	Unit
10	007392	Burning plate LWP/LWK	1.00	pcs
20	007397	Rear burning stone	1.00	pcs
30	007388	Burning stone left/right LWK/LWP	2.00	pcs
40	007377	Front burning stone	1.00	pcs
190	007383	Rear combustion chamber stone LWP18-30, LWK	1.00	pcs
200	051233	Combustion chamber stone left/right LWK	4.00	pcs
210	007384	Bottom rear combustion chamber stone LWP18-30	1.00	pcs
220	007385	Bottom front combustion chamber stone LWP18-30	1.00	pcs
270	046119	Rope seal kit for burning stones LWP18-30	1.00	pcs
280	007391	Seal for secondary air nozzle LWP180-305	2.00	pcs
540	007380	Rear insulating stone for LogWIN Premium 180-305	1.00	pcs
550	051234	Insulating stone left/right LWK	2.00	pcs
570	051236	Bottom insulating stone LWK	2.00	pcs
1070	045326	Secondary air nozzle complete for LogWIN Premium 180-305	2.00	pcs

Control panel (A000140)

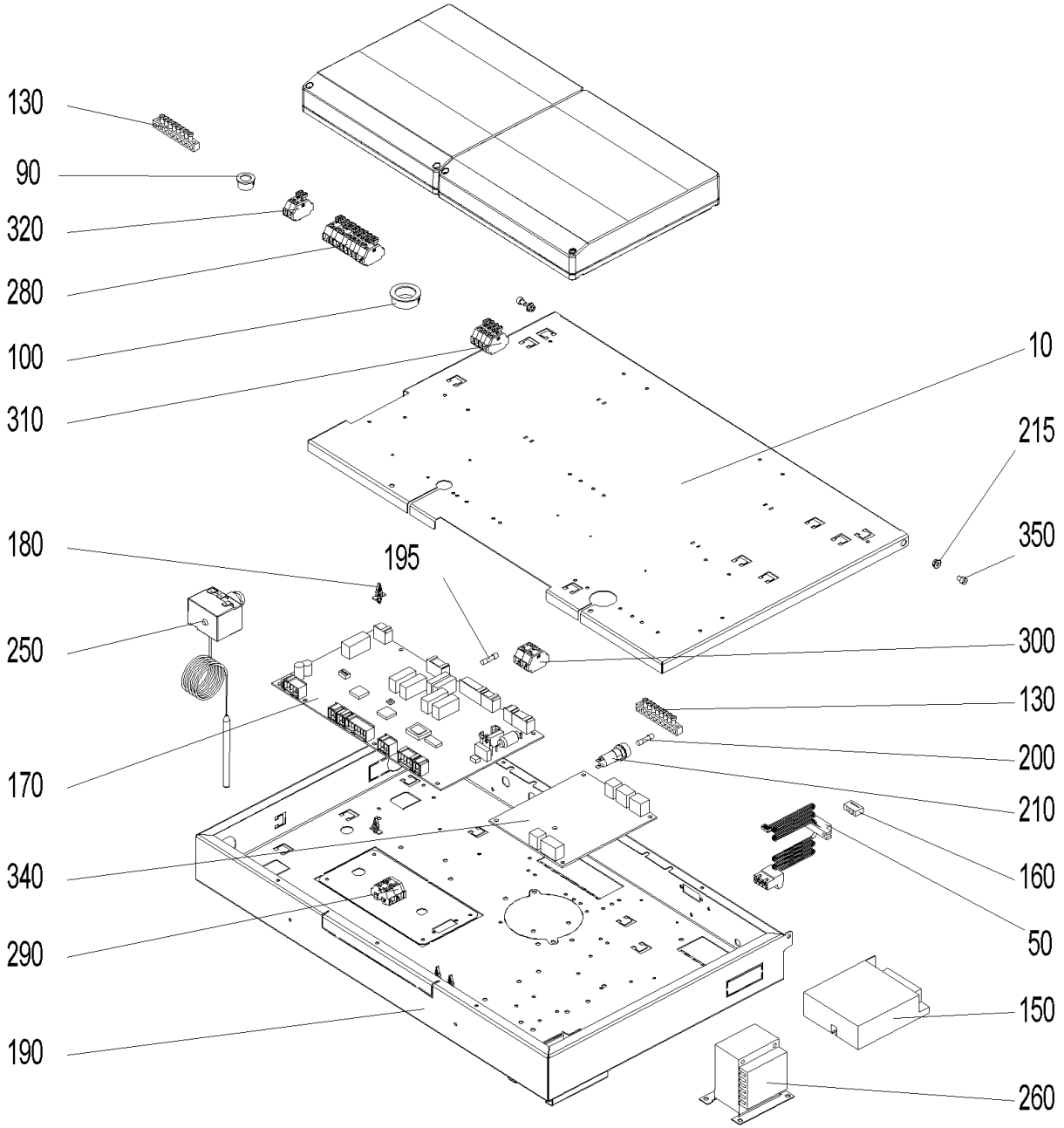

Control panel (A000140)

Item no.	Article no.	Description	Quantity	Unit
10	053779	de: Deckel Schaltfeld BW2T, LWPT	1.00	pcs
20	054311	de: Flachbandkabel vorm. LWPT	1.00	pcs
30	054313	de: Fühlerset vorm. LWPT	1.00	pcs
40	054155	de: Zuleitungskabel LWPT	1.00	pcs
50	009605	de: Kabel - LON LWPT, BWXL2, BW2, BW2T	1.00	pcs
60	002059	Power supply cable (not illustrated)	1.00	pcs
70	007165	Lambda sensor cable (not illustrated)	1.00	pcs
80	048419	Draught fan cable (not illustrated)	1.00	pcs
90	009542	Cable feed-through	1.00	pcs
100	009536	de: Kabeldurchführung 2160 schwarz Ø 28	1.00	pcs
120	054315	de: Kabelsatz 230V SB LWPT	1.00	pcs
130	009929	Terminal bar MS 8-pin 8x8mm for VarioWIN,FireWIN, BioWIN XL 35-60	2.00	pcs
140	041430	Mains connection socket 3-pin for MIRA,ETX,PMX,BioWIN10-26,LogWIN Premium 180-505,EasyWIN Premium 180,BioWIN XL 35-60, FireWIN	1.00	pcs
150	051645	Power supply unit 12V	1.00	pcs
160	005784	Pin connector (not illustrated)	1.00	pcs
170	011999	FMF PCB for LogWIN Premium 180-505	1.00	pcs
180	007609	PCB holder	12.00	pcs
190	052994	de: Schaltfeld Unterteil BW2T, LWPT	1.00	pcs
195	006900	Fuse 1 A T 5x20 ceramic tube	2.00	pcs
200	003228	6.3A fuse (not illustrated)	2.00	pcs
210	003663	Fuse holder	1.00	pcs
215	016564	de: Sperrzahnmutter M4 verzinkt	1.00	pcs

Control panel (A000140)

Item no.	Article no.	Description	Quantity	Unit
220	009318	Plug ST18/3S sw wie for LogWIN Premium 180-505	1.00	pcs
230	502186	MES009M Immersion sensor	1.00	pcs
240	007626	Thermocouple	1.00	pcs
250	005672	Thermostat LS1+100-6U	1.00	pcs
260	007096	Transformer for O2 sensor 18VA for LogWIN Premium 180-505	1.00	pcs
270	054314	de: Trafo O2-Sonde vorm. LWPT	1.00	pcs
280	009891	Wago terminal block 261; 11-pin safety 1-11 for FireWIN, VarioWIN	1.00	pcs
290	006833	Wago terminal block 261; 4-pin "12V GND"	1.00	pcs
300	006834	Wago terminal block 261; 4-pin "safety 1-4"	1.00	pcs
310	006835	de: Wagoblock 261 5tlg."ext. Wärme" 1-4 PMX, BW2T, LWPT	1.00	pcs
320	009948	Wago terminal block 261; 2-pin WMS 1-2, 3-piece for VarioWIN, FireWIN	1.00	pcs
330	009334	de: Zugentlastung 3 pol.f.Bu. Z7.419.2153.OSW	1.00	pcs
340	007095	Extra PCB for O2-mesure or pumping rotation speed control for BioWIN cascade, LogWIN Premium 180-505	1.00	pcs
350	016782	de: Zylinderschraube m. Innensechskant ISO 4762 - M 4 x 10 - 8.8 - verzinkt (DIN 912)	1.00	pcs

Boiler (A000136)

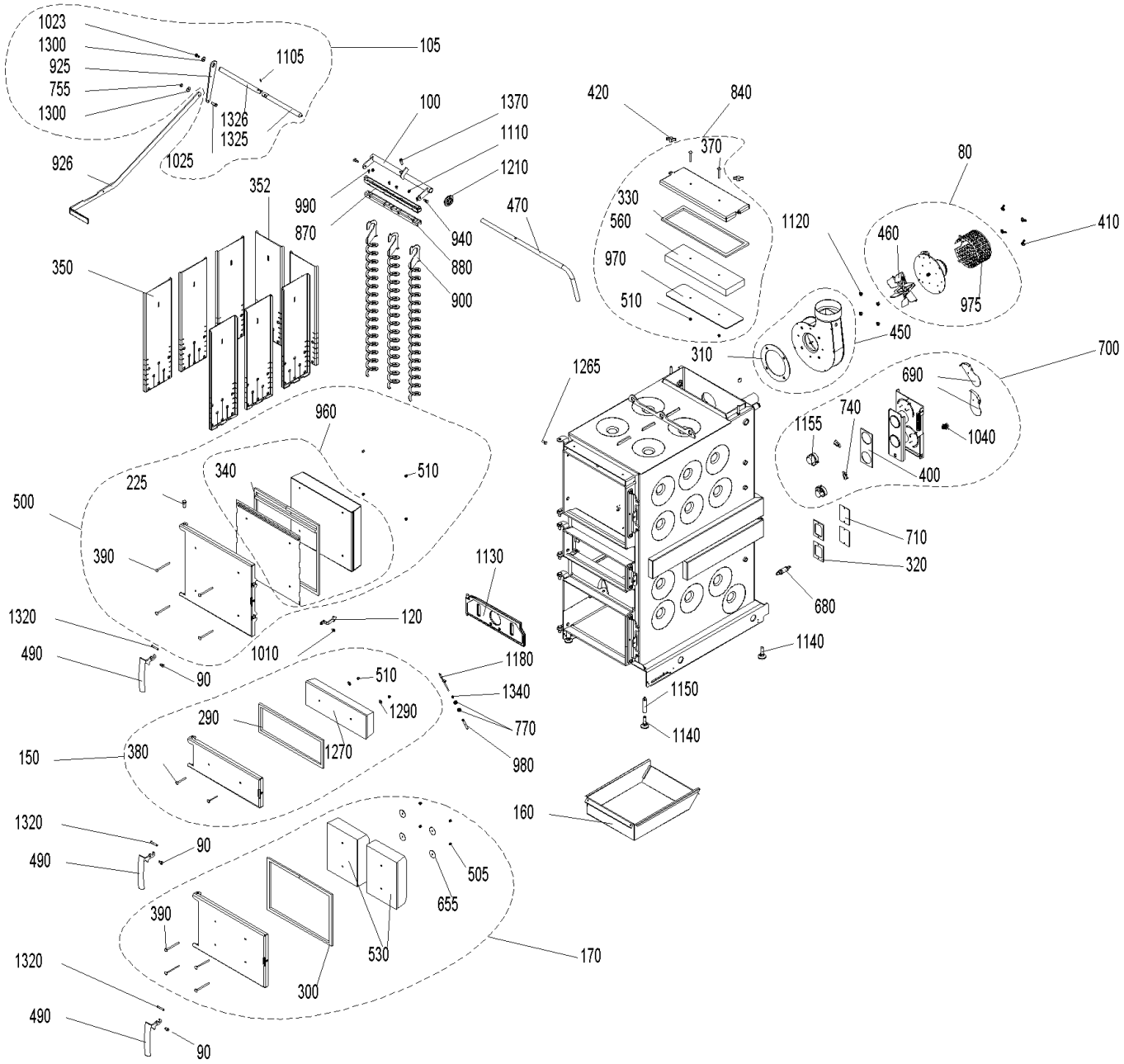

Boiler (A000136)

Item no.	Article no.	Description	Quantity	Unit
80	051661	Flue gas blower, complete for LWK	1.00	pcs
90	048881	Axle for door handle CK45	2.00	pcs
100	046328	Axle for cleaning heating surfaces	1.00	pcs
120	052728	de: Anlüftsicherungshaken rot LWPT	1.00	pcs
150	051564	Lighting door, complete	1.00	pcs
160	045419	Ash pan LWP18-50, LWK	1.00	pcs
170	051563	Ash door, complete LWK	1.00	pcs
225	033104	Door mounting bolt ISO 2341-A - 12x32	1.00	pcs
290	046267	Lighting door seal LWP18-50, LW	1.00	pcs
300	046268	Ash door seal LWP18-50, LWK	1.00	pcs
310	050825	Blower seal LWK	1.00	pcs
320	009378	Seal for vent cover LWP18-50, LWK	4.00	pcs
330	051567	Seal for cleaning cover LWK	1.00	pcs
340	051568	Heating door seal set LWK	1.00	pcs
350	045431	Hook-in plate for LogWIN Premium 180-505	8.00	pcs
352	045431	Hook-in plate for LogWIN Premium 180-505	8.00	pcs
370	016178	Round-head screw M6x55	2.00	pcs
380	016186	Round-head screw M6x60	2.00	pcs
390	016190	Round-head screw M6x90	4.00	pcs
400	009305	Flange seal LWP18-50, LWK	1.00	pcs
410	019410	Wing nut M6	4.00	pcs
420	007366	Wing nut M8	2.00	pcs

Boiler (A000136)

Item no.	Article no.	Description	Quantity	Unit
450	051577	Blower box, complete LWK	1.00	pcs
460	053032	Blower wheel	1.00	pcs
470	045447	Handle for cleaning heating surfaces for LogWIN Premium 180-305	1.00	pcs
490	048811	Boiler handle	3.00	pcs
500	051579	Heating door, complete LWK	1.00	pcs
505	016192	Cap nut	4.00	pcs
510	025968	Cap nut M6	1.00	pcs
530	050585	Insulating stone AT LWK	2.00	pcs
560	050542	Insulating stone for cleaning cover LWK	1.00	pcs
655	016191	Washer M6 4x40x1,5	4.00	pcs
680	051646	Lambda sensor	1.00	pcs
690	040032	Air choke	2.00	pcs
700	054194	de: Luftregler kpl. mont. LWPT	1.00	pcs
710	046338	Vent cover	4.00	pcs
740	009277	Air control microswitch	2.00	pcs
770	031156	Hexagon nut M10 DIN 439	2.00	pcs
840	051663	Cleaning cover LWK	1.00	pcs
870	046325	Top cleaning profile for LogWIN Premium 180-305	1.00	pcs
880	046323	Bottom cleaning profile for LogWIN Premium 180-305	1.00	pcs
900	046322	Cleaning auger for LogWIN Premium 180-505	4.00	pcs
940	006756	Screw M6 for heating surface cleaning for PMX,BioWIN 10-26,FireWIN, BioWIN XL 35-60, LogWIN Premium 180-505	2.00	pcs
960	053240	Heating door protection plate LWK	1.00	pcs

Boiler (A000136)

Item no.	Article no.	Description	Quantity	Unit
970	051666	Cleaning cover protection plate LWK	1.00	pcs
975	010882	Flue gas blower protection hood LWK	1.00	pcs
980	051231	Thermocontrol sensor protective tube LWK	1.00	pcs
990	031545	Hexagon screw M5x12 DIN 7500 (not ilustrated)	1.00	pcs
1010	051671	Door screw M8	1.00	pcs
1040	017205	Hexagon screws M12x25-8.8	1.00	pcs
1110	016566	Hexagon nut with flange and gearing M6	1.00	pcs
1120	016553	Hexagon nut M8 with flange and gearing	4.00	pcs
1130	051162	Vertical grate LWK/LWP	1.00	pcs
1140	009994	Foot M12X40 JTB38 for HMX, EasyWIN Klassik/Premium 180, LogWIN Premium 180-505	4.00	pcs
1150	007453	Leg extension for LogWIN Premium 180-505, EasyWIN Klassik/Premium 180	2.00	pcs
1155	040429	Servomotor for HMX, SilvaWIN, LogWIN Premium 180-505	2.00	pcs
1180	007626	Thermocouple	1.00	pcs
1210	048812	Grommet for EasyWIN, LogWIN Premium 180-505	1.00	pcs
1265	051671	Door screw M8	1.00	pcs
1270	050590	Door stone for lighting door LWK	1.00	pcs
1290	031753	Disc 6 ISO 7093	1.00	pcs
1320	050568	Locking axle LWK	3.00	pcs
1340	007164	Tension spring	1.00	pcs
1370	017046	Cyl. screw M 8X30	1.00	pcs

Cladding (A000138)

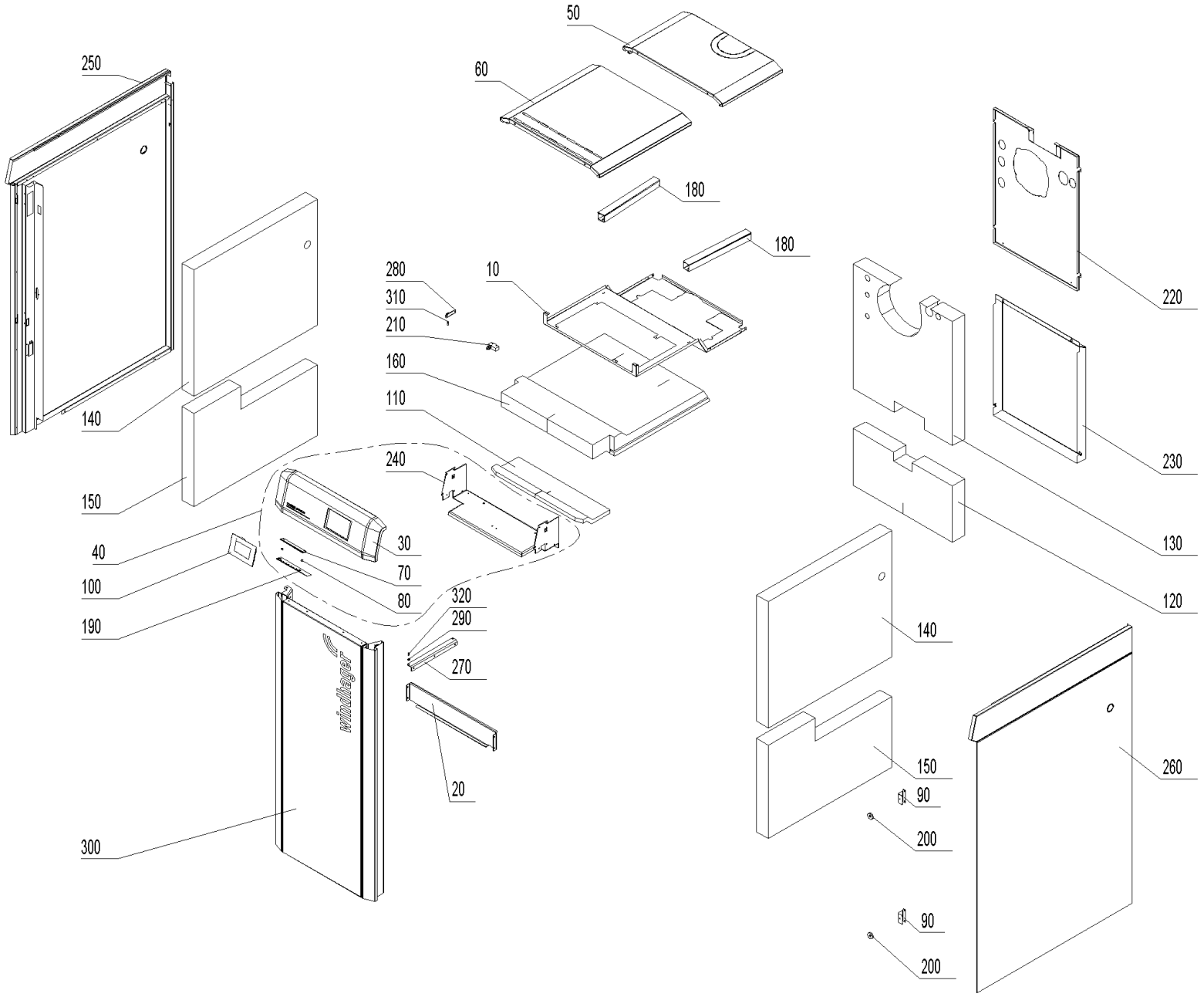

Cladding (A000138)

Item no.	Article no.	Description	Quantity	Unit
10	053773	de: Abdeckblech Isolierung oben LWPT	1.00	pcs
20	051223	Sensor cover	1.00	pcs
30	054137	de: Bedienfeld kpl. LWPT 18-30	1.00	pcs
40	054150	LWP16 Bedienfeld zu LogWIN Premium 180T-305T	1.00	pcs
50	054105	de: Deckel hinten LWPT 18-36	1.00	pcs
60	054104	de: Deckel vorne LWPT 18-36	1.00	pcs
70	007196	de: Diffuser LED-Streifen LWPT	1.00	pcs
80	009694	de: Distanzhülse Ø8xØ4,3x5,4	2.00	pcs
90	053753	de: Haltebügel Magnet LWPT 18-36	2.00	pcs
100	001009	INF8 MES INFINITY InfoWIN Touch	1.00	pcs
110	054183	de: Isolierung Bedienfeld LWPT 18-30	1.00	pcs
120	051216	Bottom rear insulation LWK	1.00	pcs
130	054156	de: Isolierung hinten oben LWPT 18-30	1.00	pcs
140	053989	de: Isolierung links/rechts oben LWPT 18-50	2.00	pcs
150	051222	Bottom left/right insulation	2.00	pcs
160	053985	de: Isolierung oben LWPT 18-30	1.00	pcs
170	009606	de: Kabel InfoWIN Touch auf LED-Streifen	1.00	pcs
180	050837	Cable duct	2.00	pcs
190	012990	de: LED - Balken LWPT	1.00	pcs
200	001761	de: Magnet Ø31 gummiummantelt	2.00	pcs
210	007128	Microswitch Z-15GQ-B for LogWIN Premium 180-505, BioWIN XL 35-60	1.00	pcs
220	051552	de: Rückwand oben LWPT 18-30	1.00	pcs

Cladding (A000138)

Item no.	Article no.	Description	Quantity	Unit
230	050839	Bottom rear panel LWK	1.00	pcs
240	053797	de: Schwelgasführung LWPT 18-36	1.00	pcs
250	054135	de: Seitenwand links LWPT 18-50	1.00	pcs
260	054136	de: Seitenwand rechts LWPT 18-50	1.00	pcs
270	051911	de: Türangel unten LWPT	1.00	pcs
280	051909	de: Türlager oben LWPT	1.00	pcs
290	018309	Disc 5 DIN134	1.00	pcs
300	054133	de: Verkleidungstür kpl. LWPT 18-30	1.00	pcs
310	015507	Dog point screw	1.00	pcs
320	033092	de: Zapfenschrauben M5X5	1.00	pcs

cleaning equipment (A000143)

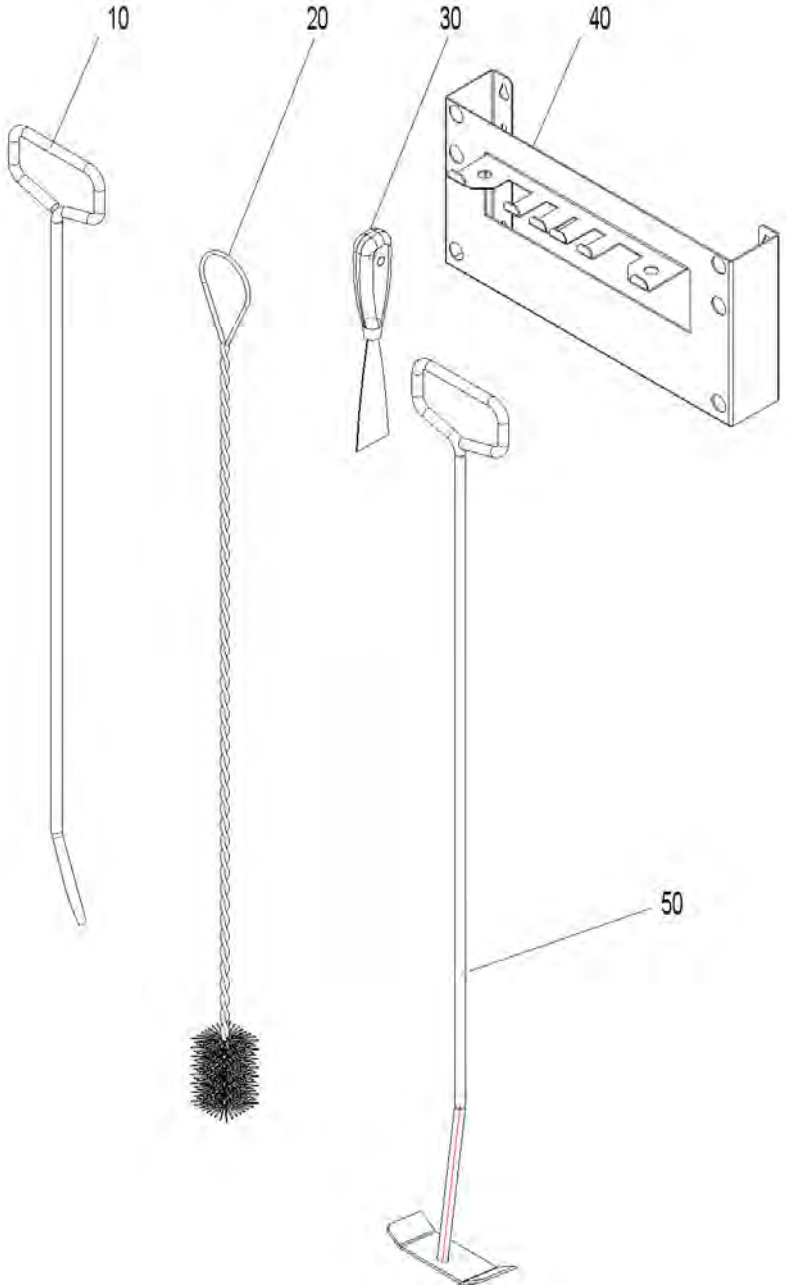

cleaning equipment (A000143)

Item no.	Article no.	Description	Quantity	Unit
10	080664	FAX192 Poker for FAX,HMX,SilvaWIN,FKX,EasyWIN Klassik/Premium 180,LogWIN Premium 180-505	1.00	pcs
20	003088	GWX992 Cleaning brush 950x45mm/45x70 mm for GWX, LogWIN Premium 180-505, EasyWIN Klassik/Premium 180	1.00	pcs
30	009540	Spatula	1.00	pcs
40	042743	Holder for cleaning equipments for VarioWIN, LogWIN Premium 180-505,SilvaWIN,BioWIN XL35-60,EasWIN Klassik/Premium 180	1.00	pcs
50	040328	Cleaning rake for HMX,PMX, EasyWIN Klassik/Premium 180, LogWIN Premium 180-505	1.00	pcs

combustion chamber (A000141)

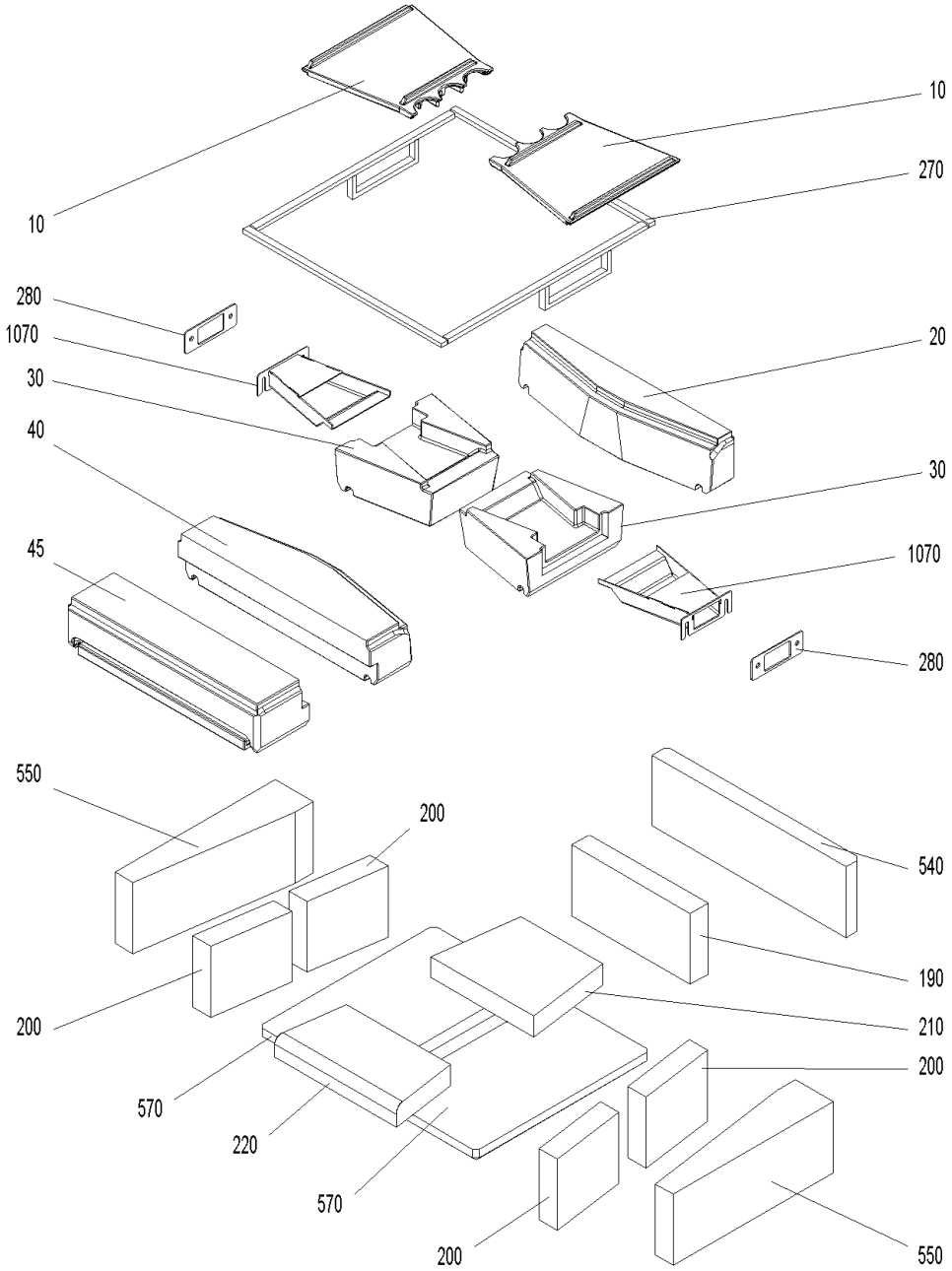

combustion chamber (A000141)

Item no.	Article no.	Description	Quantity	Unit
10	007392	Burning plate LWP/LWK	1.00	pcs
20	007397	Rear burning stone	1.00	pcs
30	007388	Burning stone left/right LWK/LWP	2.00	pcs
40	007377	Front burning stone	1.00	pcs
190	007383	Rear combustion chamber stone LWP18-30, LWK	1.00	pcs
200	051233	Combustion chamber stone left/right LWK	4.00	pcs
210	007384	Bottom rear combustion chamber stone LWP18-30	1.00	pcs
220	007385	Bottom front combustion chamber stone LWP18-30	1.00	pcs
270	046119	Rope seal kit for burning stones LWP18-30	1.00	pcs
280	007391	Seal for secondary air nozzle LWP180-305	2.00	pcs
540	007380	Rear insulating stone for LogWIN Premium 180-305	1.00	pcs
550	051234	Insulating stone left/right LWK	2.00	pcs
570	051236	Bottom insulating stone LWK	2.00	pcs
1070	045326	Secondary air nozzle complete for LogWIN Premium 180-305	2.00	pcs

Control panel (A000140)

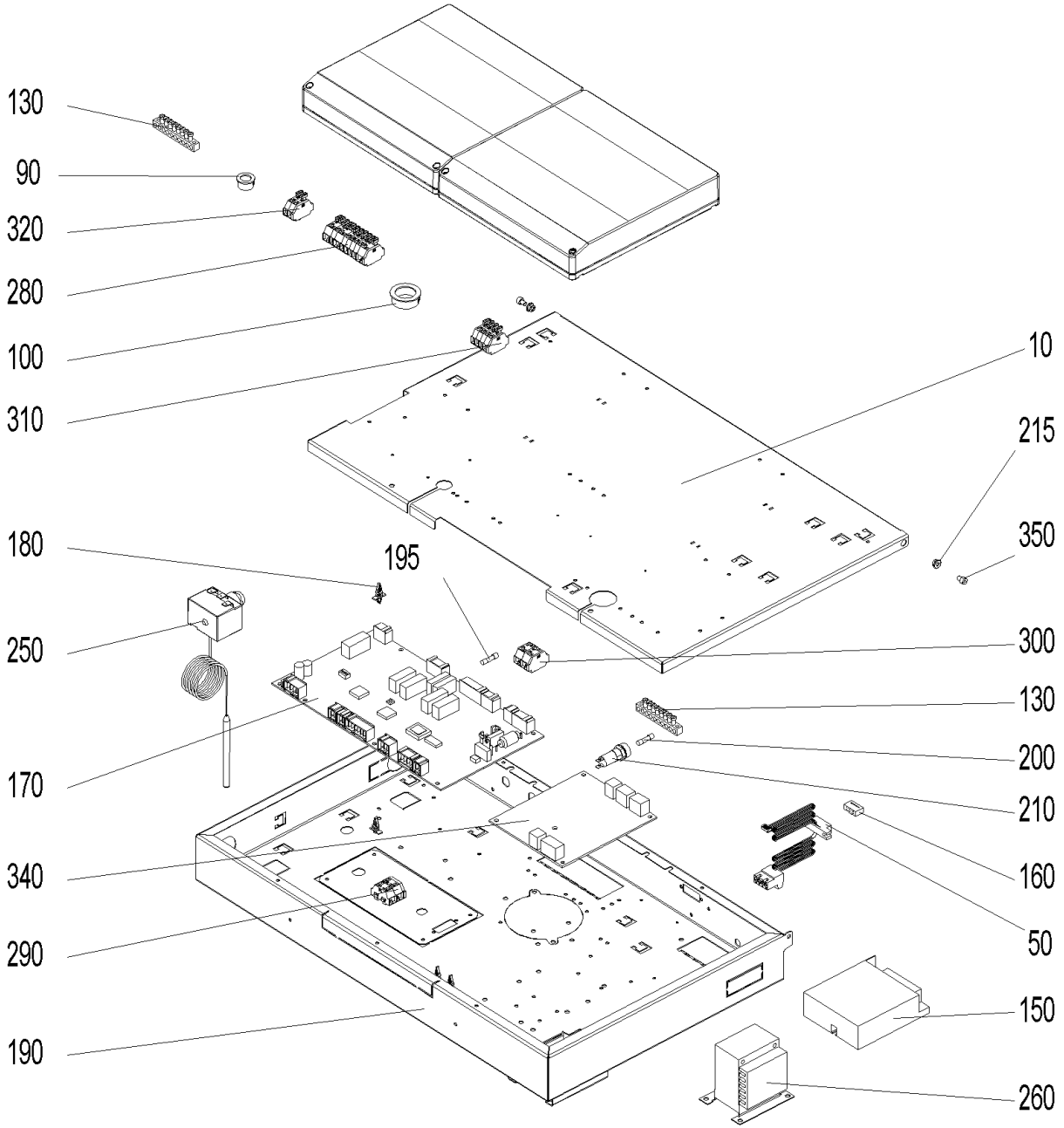

Control panel (A000140)

Item no.	Article no.	Description	Quantity	Unit
10	053779	de: Deckel Schaltfeld BW2T, LWPT	1.00	pcs
20	054311	de: Flachbandkabel vorm. LWPT	1.00	pcs
30	054313	de: Fühlerset vorm. LWPT	1.00	pcs
40	054155	de: Zuleitungskabel LWPT	1.00	pcs
50	009605	de: Kabel - LON LWPT, BWXL2, BW2, BW2T	1.00	pcs
60	002059	Power supply cable (not illustrated)	1.00	pcs
70	007165	Lambda sensor cable (not illustrated)	1.00	pcs
80	048419	Draught fan cable (not illustrated)	1.00	pcs
90	009542	Cable feed-through	1.00	pcs
100	009536	de: Kabeldurchführung 2160 schwarz Ø 28	1.00	pcs
120	054315	de: Kabelsatz 230V SB LWPT	1.00	pcs
130	009929	Terminal bar MS 8-pin 8x8mm for VarioWIN,FireWIN, BioWIN XL 35-60	2.00	pcs
140	041430	Mains connection socket 3-pin for MIRA,ETX,PMX,BioWIN10-26,LogWIN Premium 180-505,EasyWIN Premium 180,BioWIN XL 35-60, FireWIN	1.00	pcs
150	051645	Power supply unit 12V	1.00	pcs
160	005784	Pin connector (not illustrated)	1.00	pcs
170	011999	FMF PCB for LogWIN Premium 180-505	1.00	pcs
180	007609	PCB holder	12.00	pcs
190	052994	de: Schaltfeld Unterteil BW2T, LWPT	1.00	pcs
195	006900	Fuse 1 A T 5x20 ceramic tube	2.00	pcs
200	003228	6.3A fuse (not illustrated)	2.00	pcs
210	003663	Fuse holder	1.00	pcs
215	016564	de: Sperrzahnmutter M4 verzinkt	1.00	pcs

Control panel (A000140)

Item no.	Article no.	Description	Quantity	Unit
220	009318	Plug ST18/3S sw wie for LogWIN Premium 180-505	1.00	pcs
230	502186	MES009M Immersion sensor	1.00	pcs
240	007626	Thermocouple	1.00	pcs
250	005672	Thermostat LS1+100-6U	1.00	pcs
260	007096	Transformer for O2 sensor 18VA for LogWIN Premium 180-505	1.00	pcs
270	054314	de: Trafo O2-Sonde vorm. LWPT	1.00	pcs
280	009891	Wago terminal block 261; 11-pin safety 1-11 for FireWIN, VarioWIN	1.00	pcs
290	006833	Wago terminal block 261; 4-pin "12V GND"	1.00	pcs
300	006834	Wago terminal block 261; 4-pin "safety 1-4"	1.00	pcs
310	006835	de: Wagoblock 261 5tlg."ext. Wärme" 1-4 PMX, BW2T, LWPT	1.00	pcs
320	009948	Wago terminal block 261; 2-pin WMS 1-2, 3-piece for VarioWIN, FireWIN	1.00	pcs
330	009334	de: Zugentlastung 3 pol.f.Bu. Z7.419.2153.OSW	1.00	pcs
340	007095	Extra PCB for O2-mesure or pumping rotation speed control for BioWIN cascade, LogWIN Premium 180-505	1.00	pcs
350	016782	de: Zylinderschraube m. Innensechskant ISO 4762 - M 4 x 10 - 8.8 - verzinkt (DIN 912)	1.00	pcs

Boiler (A000137)

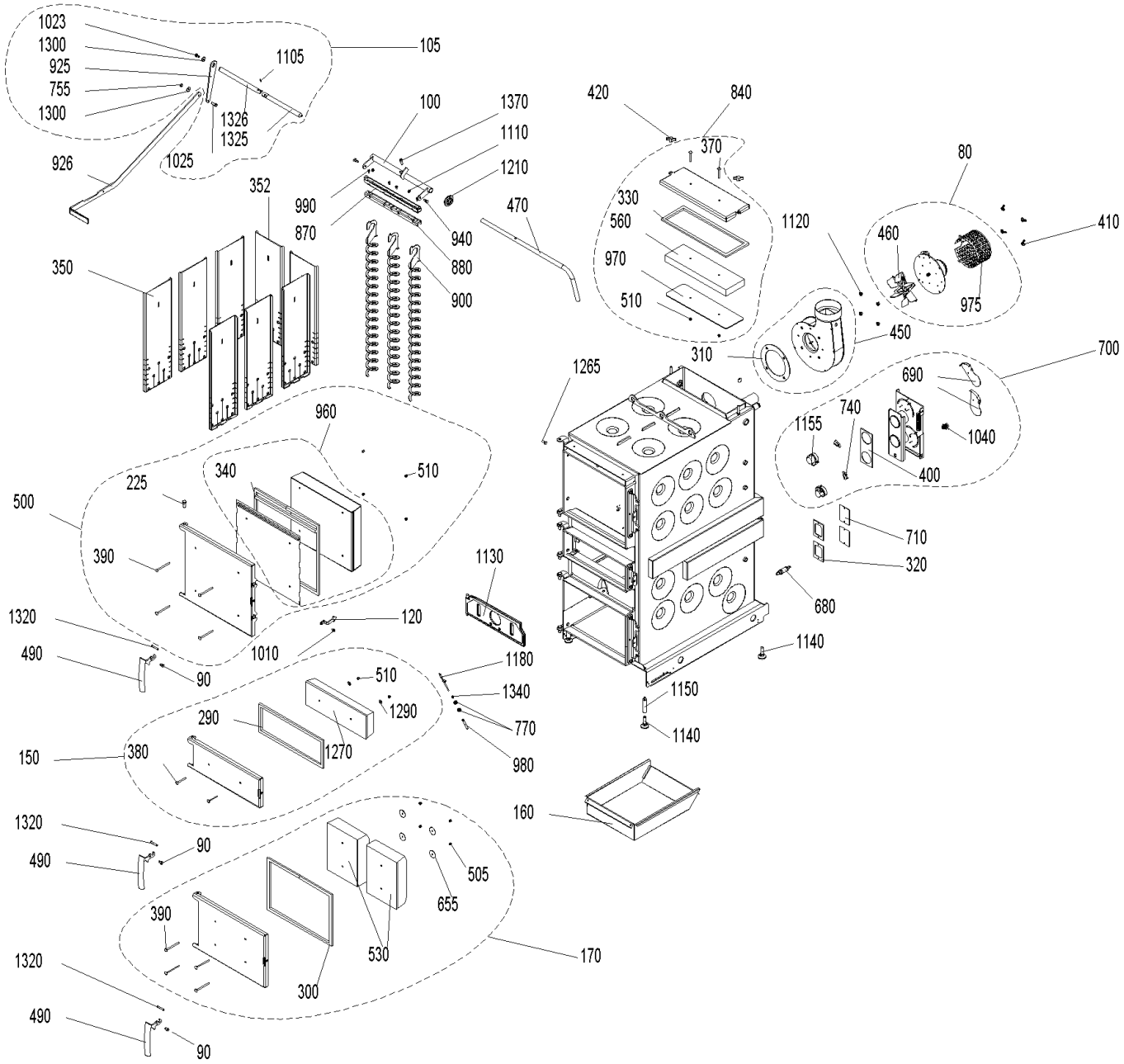

Boiler (A000137)

Item no.	Article no.	Description	Quantity	Unit
80	051661	Flue gas blower, complete for LWK	1.00	pcs
90	048881	Axle for door handle CK45	2.00	pcs
100	045754	de: Achse für Heizflächenreinigung LWP500	1.00	pcs
120	052728	de: Anlüftsicherungshaken rot LWPT	1.00	pcs
150	051564	Lighting door, complete	1.00	pcs
160	045419	Ash pan LWP18-50, LWK	1.00	pcs
170	051563	Ash door, complete LWK	1.00	pcs
225	033104	Door mounting bolt ISO 2341-A - 12x32	1.00	pcs
290	046267	Lighting door seal LWP18-50, LW	1.00	pcs
300	046268	Ash door seal LWP18-50, LWK	1.00	pcs
310	050825	Blower seal LWK	1.00	pcs
320	009378	Seal for vent cover LWP18-50, LWK	4.00	pcs
330	054139	de: Dichtung für Reinigungsdeckel LWPT	1.00	pcs
340	051568	Heating door seal set LWK	1.00	pcs
350	045431	Hook-in plate for LogWIN Premium 180-505	6.00	pcs
352	045737	Rear hook-in plate for LogWIN Premium 360-505	3.00	pcs
370	016178	Round-head screw M6x55	2.00	pcs
380	016186	Round-head screw M6x60	2.00	pcs
390	016190	Round-head screw M6x90	4.00	pcs
400	009305	Flange seal LWP18-50, LWK	1.00	pcs
410	019410	Wing nut M6	4.00	pcs
420	007366	Wing nut M8	2.00	pcs

Boiler (A000137)

Item no.	Article no.	Description	Quantity	Unit
450	051577	Blower box, complete LWK	1.00	pcs
460	053032	Blower wheel	1.00	pcs
470	045746	Handle for cleaning heating surfaces for LogWIN Premium 360-505	1.00	pcs
490	048811	Boiler handle	3.00	pcs
500	051579	Heating door, complete LWK	1.00	pcs
505	016192	Cap nut	4.00	pcs
510	025968	Cap nut M6	1.00	pcs
530	050585	Insulating stone AT LWK	2.00	pcs
560	051737	de: Isolierstein RD Material Vermiculite	1.00	pcs
655	016191	Washer M6 4x40x1,5	4.00	pcs
680	051646	Lambda sensor	1.00	pcs
690	040032	Air choke	2.00	pcs
700	054194	de: Luftregler kpl. mont. LWPT	1.00	pcs
710	046338	Vent cover	4.00	pcs
740	009277	Air control microswitch	2.00	pcs
770	031156	Hexagon nut M10 DIN 439	2.00	pcs
840	054140	de: Reinigungsdeckel kpl. lack. LWPT 36/50	1.00	pcs
870	054141	de: Reinigungsprofil oben LWPT 36/50	1.00	pcs
880	054142	de: Reinigungsprofil unten LWPT 36/50	1.00	pcs
900	046322	Cleaning auger for LogWIN Premium 180-505	6.00	pcs
940	006756	Screw M6 for heating surface cleaning for PMX,BioWIN 10-26,FireWIN, BioWIN XL 35-60, LogWIN Premium 180-505	2.00	pcs
960	053240	Heating door protection plate LWK	1.00	pcs

Boiler (A000137)

Item no.	Article no.	Description	Quantity	Unit
970	054144	de: Schutzblech Reinigungsdeckel lackiert LWPT 36/50	1.00	pcs
975	010882	Flue gas blower protection hood LWK	1.00	pcs
980	051231	Thermocontrol sensor protective tube LWK	1.00	pcs
990	031545	Hexagon screw M5x12 DIN 7500 (not ilustrated)	1.00	pcs
1010	051671	Door screw M8	1.00	pcs
1010	031549	Hexagon screw M6x12 DIN 7500	1.00	pcs
1040	017205	Hexagon screws M12x25-8.8	1.00	pcs
1110	016566	Hexagon nut with flange and gearing M6	1.00	pcs
1120	016553	Hexagon nut M8 with flange and gearing	4.00	pcs
1130	051162	Vertical grate LWK/LWP	1.00	pcs
1140	009994	Foot M12X40 JTB38 for HMX, EasyWIN Klassik/Premium 180, LogWIN Premium 180-505	4.00	pcs
1150	007453	Leg extension for LogWIN Premium 180-505, EasyWIN Klassik/Premium 180	2.00	pcs
1155	040429	Servomotor for HMX, SilvaWIN, LogWIN Premium 180-505	2.00	pcs
1180	007626	Thermocouple	1.00	pcs
1210	048812	Grommet for EasyWIN, LogWIN Premium 180-505	1.00	pcs
1265	051671	Door screw M8	1.00	pcs
1270	050590	Door stone for lighting door LWK	1.00	pcs
1290	031753	Disc 6 ISO 7093	1.00	pcs
1320	050568	Locking axle LWK	3.00	pcs
1340	007164	Tension spring	1.00	pcs
1370	017046	Cyl. screw M 8X30	1.00	pcs

Cladding (A000139)

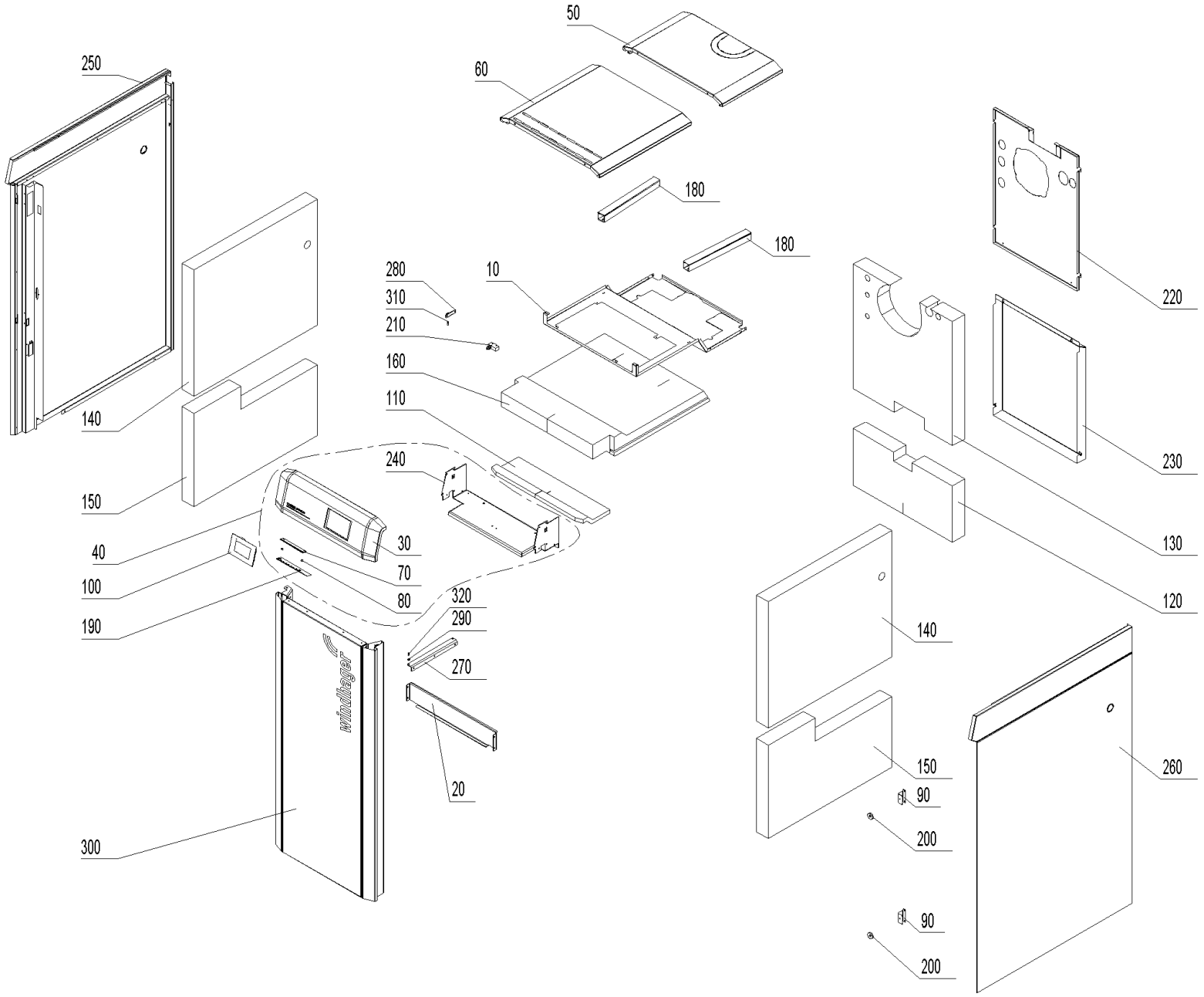

Cladding (A000139)

Item no.	Article no.	Description	Quantity	Unit
10	054110	de: Abdeckblech Isolierung oben LWP2 36/50	1.00	pcs
20	053766	de: Abdeckung Fühler LWPT 36/50	1.00	pcs
30	054138	de: Bedienfeld kpl. LWPT 36/50	1.00	pcs
40	054152	LWP17 Bedienfeld zu LogWIN Premium 360-505T	1.00	pcs
50	054107	de: Deckel hinten beschichtet RAL 7012, LWP2 30/50	1.00	pcs
60	054106	de: Deckel vorne beschichtet RAL 7012, LWP2 30/50	1.00	pcs
70	007196	de: Diffuser LED-Streifen LWPT	1.00	pcs
80	009694	de: Distanzhülse Ø8xØ4,3x5,4	2.00	pcs
90	053753	de: Haltebügel Magnet LWPT 18-36	2.00	pcs
100	001009	INF8 MES INFINITY InfoWIN Touch	1.00	pcs
110	054184	de: Is. Bedienfeld LWP36/50T, Glasfaser 22kg/m³ mit Glasvlies schwarz	1.00	pcs
120	053986	de: Isolierung hinten unten LWPT 36/50, Glasfaser 22kg/m³ mit Glasvlies schwarz	1.00	pcs
130	053988	de: Is.hi.ob. LWP2 36/50, Glasfaser 22kg/m³	1.00	pcs
140	053989	de: Isolierung links/rechts oben LWPT 18-50	2.00	pcs
150	051222	Bottom left/right insulation	2.00	pcs
160	053987	de: Is. ob. LWP2 36/50, Glasfaser 22kg/m³ mit Glasvlies schwarz	1.00	pcs
170	009606	de: Kabel InfoWIN Touch auf LED-Streifen	1.00	pcs
180	050837	Cable duct	2.00	pcs
190	012990	de: LED - Balken LWPT	1.00	pcs
200	001761	de: Magnet Ø31 gummiummantelt	2.00	pcs
210	007128	Microswitch Z-15GQ-B for LogWIN Premium 180-505, BioWIN XL 35-60	1.00	pcs
220	053764	de: Rückwand oben LWP2 36/50	1.00	pcs

Cladding (A000139)

Item no.	Article no.	Description	Quantity	Unit
230	053765	de: Rückwand unten LWP2 36/50	1.00	pcs
240	053798	de: Schwelgasführung, beschichtet RAL 7012, LWP2 30/50	1.00	pcs
250	054135	de: Seitenwand links LWPT 18-50	1.00	pcs
260	054136	de: Seitenwand rechts LWPT 18-50	1.00	pcs
270	051911	de: Türangel unten LWPT	1.00	pcs
280	051909	de: Türlager oben LWPT	1.00	pcs
290	018309	Disc 5 DIN134	1.00	pcs
300	054134	de: Verkleidungstür kpl. LWPT 36/50	1.00	pcs
310	015507	Dog point screw	1.00	pcs
320	033092	de: Zapfenschrauben M5X5	1.00	pcs

cleaning equipment (A000143)

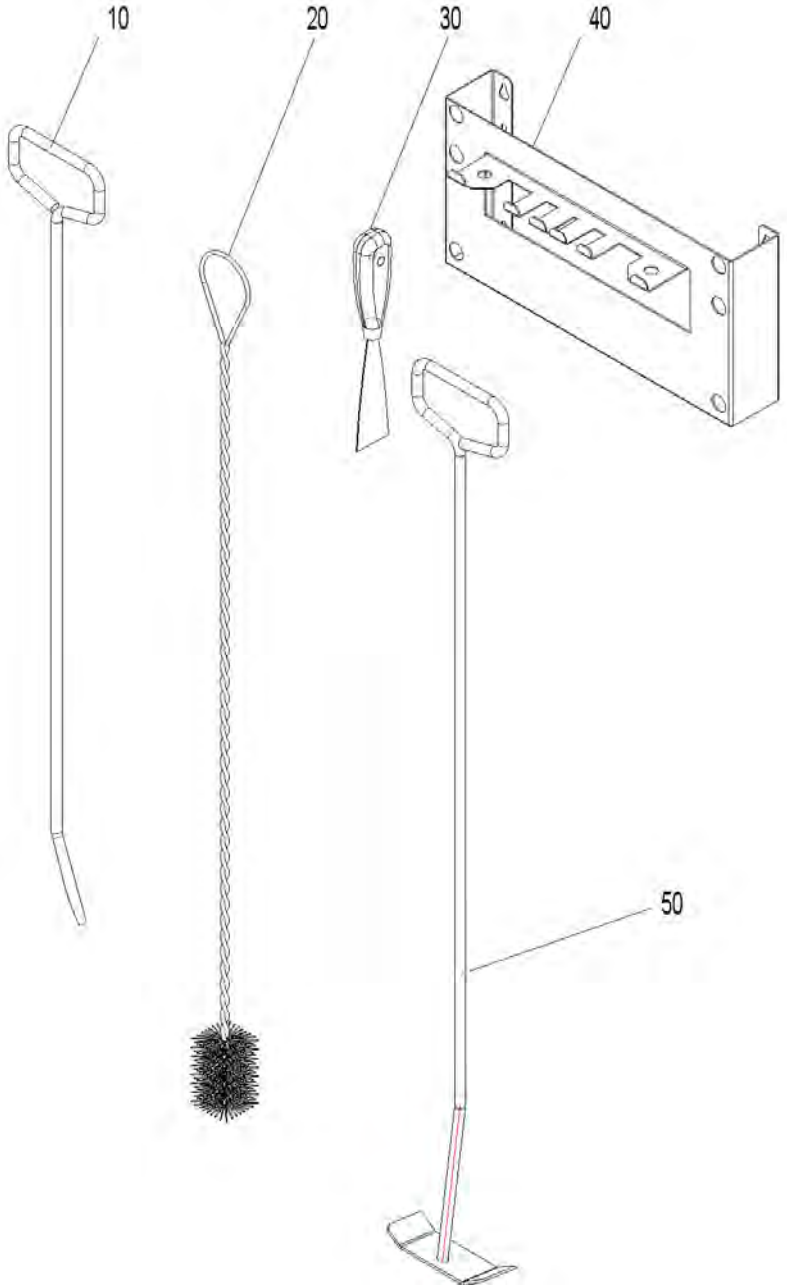

cleaning equipment (A000143)

Item no.	Article no.	Description	Quantity	Unit
50	040328	Cleaning rake for HMX,PMX, EasyWIN Klassik/Premium 180, LogWIN Premium 180-505	1.00	pcs
10	080664	FAX192 Poker for FAX,HMX,SilvaWIN,FKX,EasyWIN Klassik/Premium 180,LogWIN Premium 180-505	1.00	pcs
20	003088	GWX992 Cleaning brush 950x45mm/45x70 mm for GWX, LogWIN Premium 180-505, EasyWIN Klassik/Premium 180	1.00	pcs
40	042743	Holder for cleaning equipments for VarioWIN, LogWIN Premium 180-505,SilvaWIN,BioWIN XL35-60,EasWIN Klassik/Premium 180	1.00	pcs
30	009540	Spatula	1.00	pcs

combustion chamber (A000142)

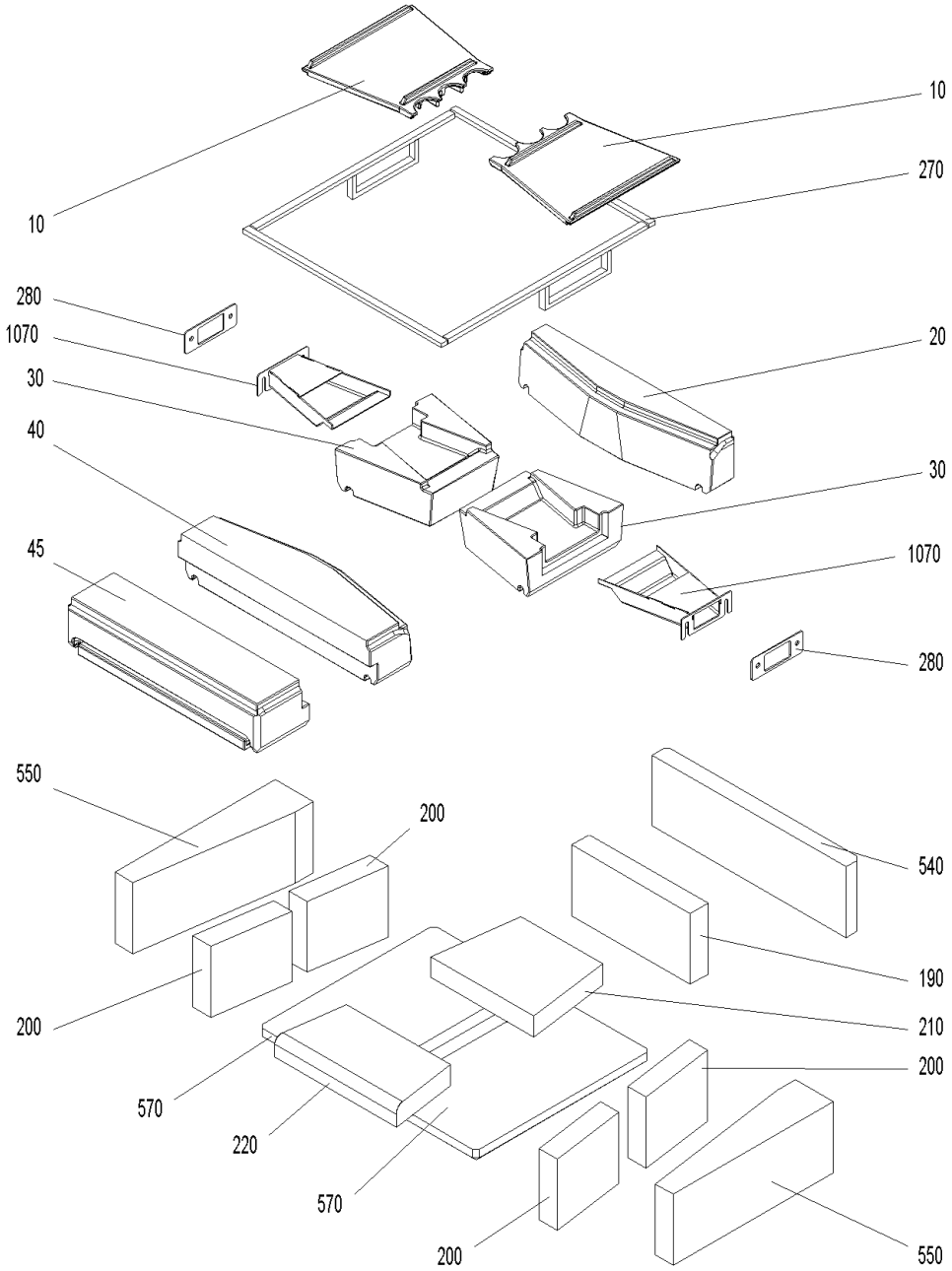

combustion chamber (A000142)

Item no.	Article no.	Description	Quantity	Unit
10	007414	Burning plate for LogWIN Premium 360-505	1.00	pcs
20	007401	Rear burning stone for LogWIN Premium 360-505	1.00	pcs
30	007400	Burning stone left/right for LogWIN Premium 360-505	2.00	pcs
40	007399	Centre burning stone for LogWIN Premium 360-505	1.00	pcs
45	007398	Front burning stone for LogWIN Premium 360-505	1.00	pcs
190	007407	Rear combustion chamber stone for LogWIN Premium 360-505	1.00	pcs
200	051233	Combustion chamber stone left/right LWK	4.00	pcs
210	007408	Bottom rear combustion chamber stone for LogWIN Premium 360-505	1.00	pcs
220	007409	Bottom front combustion chamber stone for LogWIN Premium 360-505	1.00	pcs
270	046120	Rope seal kit for burning stones for LogWIN Premium 360-505	1.00	pcs
280	007415	Seal for secondary air nozzle 142x52x3mm for LogWIN Premium 360-505	2.00	pcs
540	007403	Rear insulating stone for LogWIN Premium 360-505	1.00	pcs
550	051234	Insulating stone left/right LWK	2.00	pcs
570	051733	de: Isolierstein unten Material Vermiculite zu LWP	2.00	pcs
1070	045640	Secondary air nozzle complete for LogWIN Premium 360-505	2.00	pcs

Control panel (A000140)

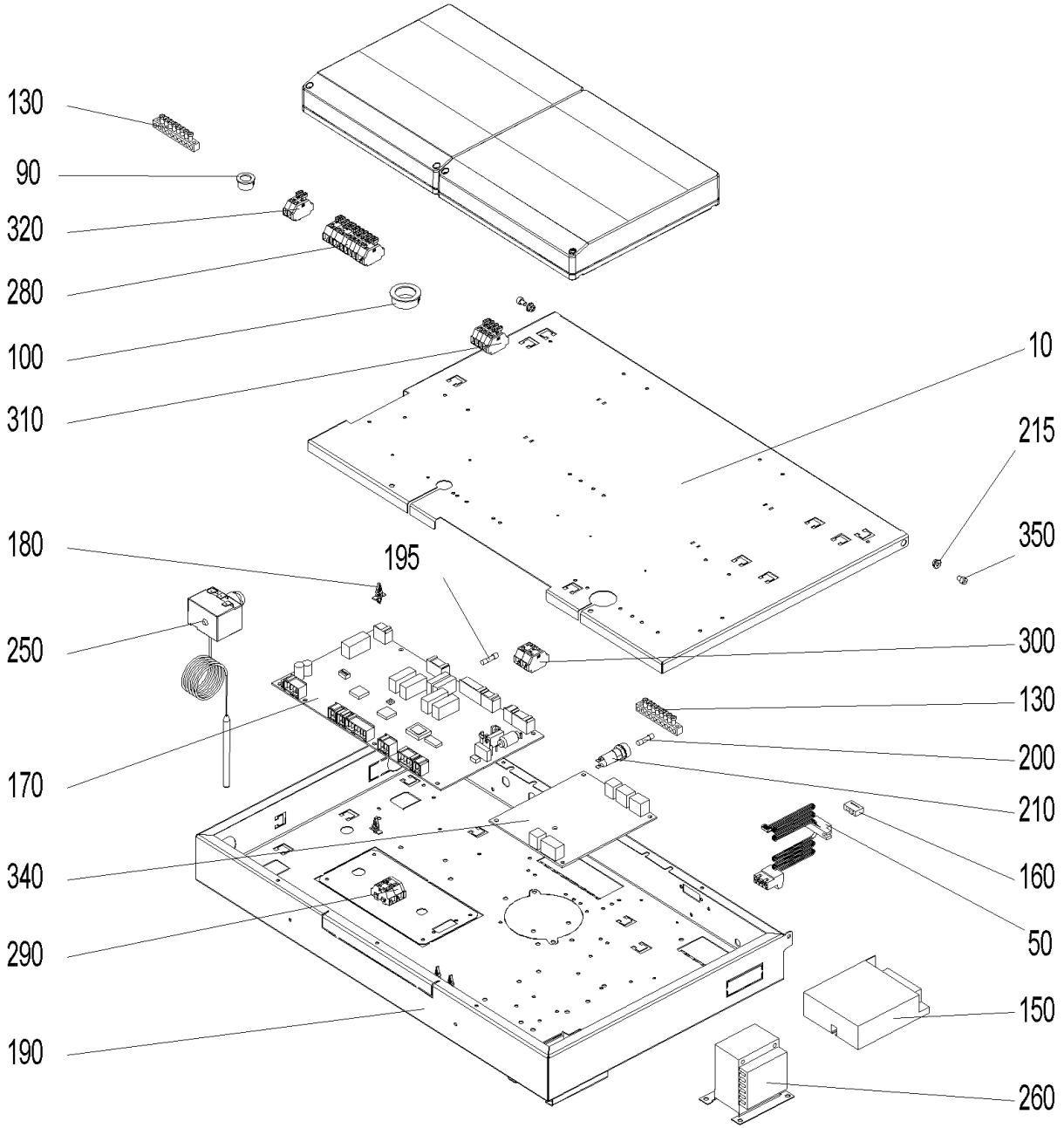

Control panel (A000140)

Item no.	Article no.	Description	Quantity	Unit
10	053779	de: Deckel Schaltfeld BW2T, LWPT	1.00	pcs
20	054311	de: Flachbandkabel vorm. LWPT	1.00	pcs
30	054313	de: Fühlerset vorm. LWPT	1.00	pcs
40	054155	de: Zuleitungskabel LWPT	1.00	pcs
50	009605	de: Kabel - LON LWPT, BWXL2, BW2, BW2T	1.00	pcs
60	002059	Power supply cable (not illustrated)	1.00	pcs
70	007165	Lambda sensor cable (not illustrated)	1.00	pcs
80	048419	Draught fan cable (not illustrated)	1.00	pcs
90	009542	Cable feed-through	1.00	pcs
100	009536	de: Kabeldurchführung 2160 schwarz Ø 28	1.00	pcs
120	054315	de: Kabelsatz 230V SB LWPT	1.00	pcs
130	009929	Terminal bar MS 8-pin 8x8mm for VarioWIN,FireWIN, BioWIN XL 35-60	2.00	pcs
140	041430	Mains connection socket 3-pin for MIRA,ETX,PMX,BioWIN10-26,LogWIN Premium 180-505,EasyWIN Premium 180,BioWIN XL 35-60, FireWIN	1.00	pcs
150	051645	Power supply unit 12V	1.00	pcs
160	005784	Pin connector (not illustrated)	1.00	pcs
170	011999	FMF PCB for LogWIN Premium 180-505	1.00	pcs
180	007609	PCB holder	12.00	pcs
190	052994	de: Schaltfeld Unterteil BW2T, LWPT	1.00	pcs
195	006900	Fuse 1 A T 5x20 ceramic tube	2.00	pcs
200	003228	6.3A fuse (not illustrated)	2.00	pcs
210	003663	Fuse holder	1.00	pcs
215	016564	de: Sperrzahnmutter M4 verzinkt	1.00	pcs

Control panel (A000140)

Item no.	Article no.	Description	Quantity	Unit
220	009318	Plug ST18/3S sw wie for LogWIN Premium 180-505	1.00	pcs
230	502186	MES009M Immersion sensor	1.00	pcs
240	007626	Thermocouple	1.00	pcs
250	005672	Thermostat LS1+100-6U	1.00	pcs
260	007096	Transformer for O2 sensor 18VA for LogWIN Premium 180-505	1.00	pcs
270	054314	de: Trafo O2-Sonde vorm. LWPT	1.00	pcs
280	009891	Wago terminal block 261; 11-pin safety 1-11 for FireWIN, VarioWIN	1.00	pcs
290	006833	Wago terminal block 261; 4-pin "12V GND"	1.00	pcs
300	006834	Wago terminal block 261; 4-pin "safety 1-4"	1.00	pcs
310	006835	de: Wagoblock 261 5tlg."ext. Wärme" 1-4 PMX, BW2T, LWPT	1.00	pcs
320	009948	Wago terminal block 261; 2-pin WMS 1-2, 3-piece for VarioWIN, FireWIN	1.00	pcs
330	009334	de: Zugentlastung 3 pol.f.Bu. Z7.419.2153.OSW	1.00	pcs
340	007095	Extra PCB for O2-mesure or pumping rotation speed control for BioWIN cascade, LogWIN Premium 180-505	1.00	pcs
350	016782	de: Zylinderschraube m. Innensechskant ISO 4762 - M 4 x 10 - 8.8 - verzinkt (DIN 912)	1.00	pcs

Boiler (A000137)

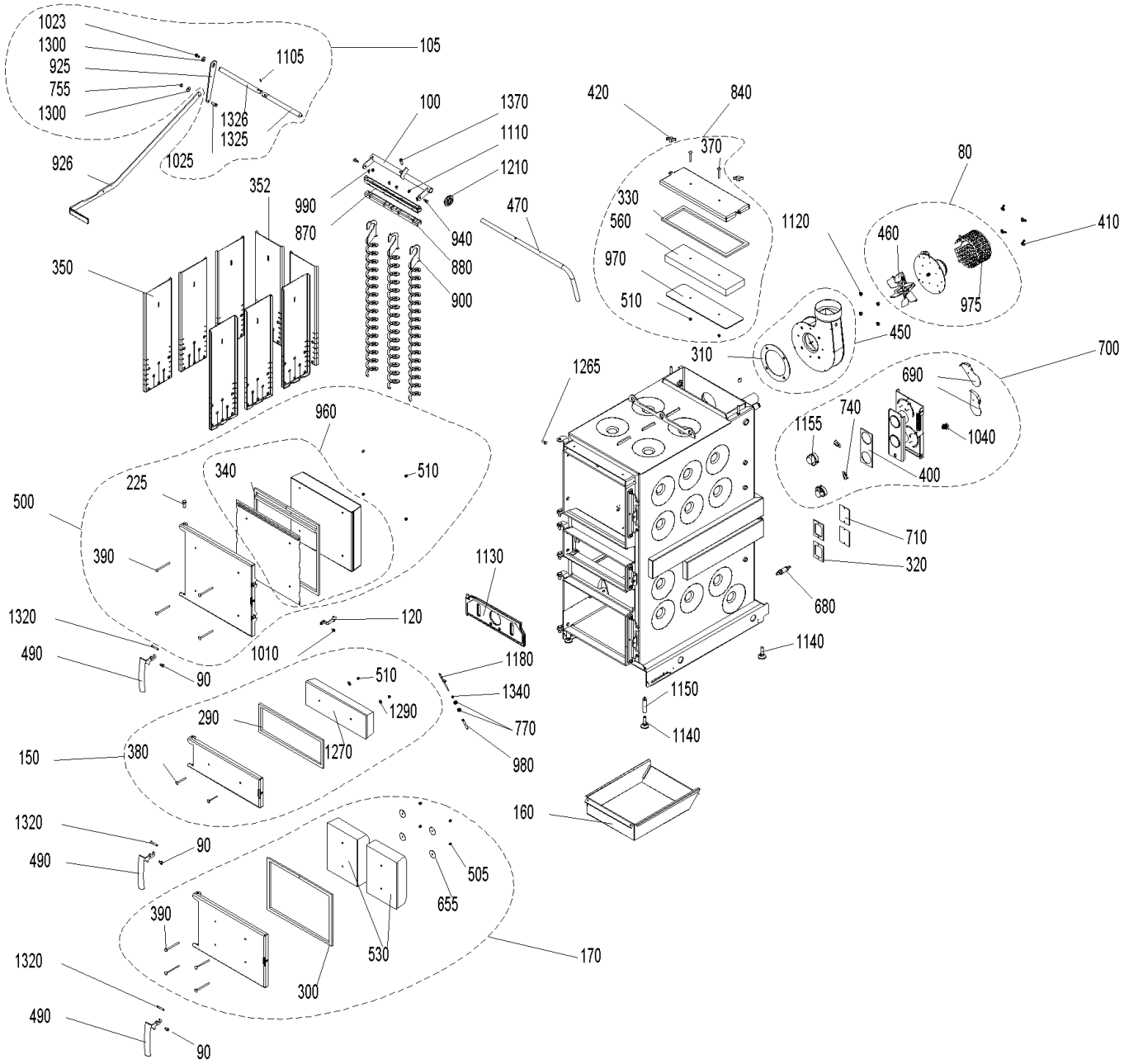

Boiler (A000137)

Item no.	Article no.	Description	Quantity	Unit
690	040032	Air choke	2.00	pcs
740	009277	Air control microswitch	2.00	pcs
170	051563	Ash door, complete LWK	1.00	pcs
300	046268	Ash door seal LWP18-50, LWK	1.00	pcs
160	045419	Ash pan LWP18-50, LWK	1.00	pcs
90	048881	Axle for door handle CK45	2.00	pcs
450	051577	Blower box, complete LWK	1.00	pcs
310	050825	Blower seal LWK	1.00	pcs
460	053032	Blower wheel	1.00	pcs
490	048811	Boiler handle	3.00	pcs
505	016192	Cap nut	4.00	pcs
510	025968	Cap nut M6	1.00	pcs
900	046322	Cleaning auger for LogWIN Premium 180-505	6.00	pcs
1370	017046	Cyl. screw M 8X30	1.00	pcs
100	045754	de: Achse für Heizflächenreinigung LWP50, LWPT36-50	1.00	pcs
120	052728	de: Anlüftsicherungshaken rot LWPT	1.00	pcs
330	054139	de: Dichtung für Reinigungsdeckel LWPT	1.00	pcs
560	051737	de: Isolierstein Reinigungsdeckel Vermiculite LWPT36-50	1.00	pcs
700	054194	de: Luftregler kpl. mont. LWPT	1.00	pcs
840	054140	de: Reinigungsdeckel kpl. lack. LWPT 36-50	1.00	pcs
870	054141	de: Reinigungsprofil oben LWPT 36-50	1.00	pcs
880	054142	de: Reinigungsprofil unten LWPT 36-50	1.00	pcs

Boiler (A000137)

Item no.	Article no.	Description	Quantity	Unit
970	054144	de: Schutzblech Reinigungsdeckel lackiert LWPT 36-50	1.00	pcs
1290	031753	Disc 6 ISO 7093	1.00	pcs
225	033104	Door mounting bolt ISO 2341-A - 12x32	1.00	pcs
1265	051671	Door screw M8	1.00	pcs
1010	051671	Door screw M8	1.00	pcs
1270	050590	Door stone for lighting door LWK	1.00	pcs
400	009305	Flange seal LWP18-50, LWK	1.00	pcs
80	051661	Flue gas blower, complete for LWK	1.00	pcs
975	010882	Flue gas blower protection hood LWK	1.00	pcs
1140	009994	Foot M12X40 JTB38 for HMX, EasyWIN Klassik/Premium 180, LogWIN Premium 180-505	4.00	pcs
1210	048812	Grommet for EasyWIN, LogWIN Premium 180-505	1.00	pcs
470	045746	Handle for cleaning heating surfaces for LogWIN Premium 360-505	1.00	pcs
500	051579	Heating door, complete LWK	1.00	pcs
960	053240	Heating door protection plate LWK	1.00	pcs
340	051568	Heating door seal set LWK	1.00	pcs
1120	016553	Hexagon nut M8 with flange and gearing	4.00	pcs
770	031156	Hexagon nut M10 DIN 439	2.00	pcs
1110	016566	Hexagon nut with flange and gearing M6	1.00	pcs
990	031545	Hexagon screw M5x12 DIN 7500 (not ilustrated)	1.00	pcs
1010	031549	Hexagon screw M6x12 DIN 7500	1.00	pcs
1040	017205	Hexagon screws M12x25-8.8	1.00	pcs
350	045431	Hook-in plate for LogWIN Premium 180-505	6.00	pcs

Boiler (A000137)

Item no.	Article no.	Description	Quantity	Unit
530	050585	Insulating stone AT LWK	2.00	pcs
680	051646	Lambda sensor	1.00	pcs
1150	007453	Leg extension for LogWIN Premium 180-505, EasyWIN Klassik/Premium 180	2.00	pcs
150	051564	Lighting door, complete	1.00	pcs
290	046267	Lighting door seal LWP18-50, LW	1.00	pcs
1320	050568	Locking axle LWK	3.00	pcs
352	045737	Rear hook-in plate for LogWIN Premium 360-505	3.00	pcs
370	016178	Round-head screw M6x55	2.00	pcs
380	016186	Round-head screw M6x60	2.00	pcs
390	016190	Round-head screw M6x90	4.00	pcs
940	006756	Screw M6 for heating surface cleaning for PMX,BioWIN 10-26,FireWIN, BioWIN XL 35-60, LogWIN Premium 180-505	2.00	pcs
320	009378	Seal for vent cover LWP18-50, LWK	4.00	pcs
1155	040429	Servomotor for HMX, SilvaWIN, LogWIN Premium 180-505	2.00	pcs
1340	007164	Tension spring	1.00	pcs
980	051231	Thermocontrol sensor protective tube LWK	1.00	pcs
1180	007626	Thermocouple	1.00	pcs
710	046338	Vent cover	4.00	pcs
1130	051162	Vertical grate LWK/LWP	1.00	pcs
655	016191	Washer M6 4x40x1,5	4.00	pcs
410	019410	Wing nut M6	4.00	pcs
420	007366	Wing nut M8	2.00	pcs

Cladding (A000139)

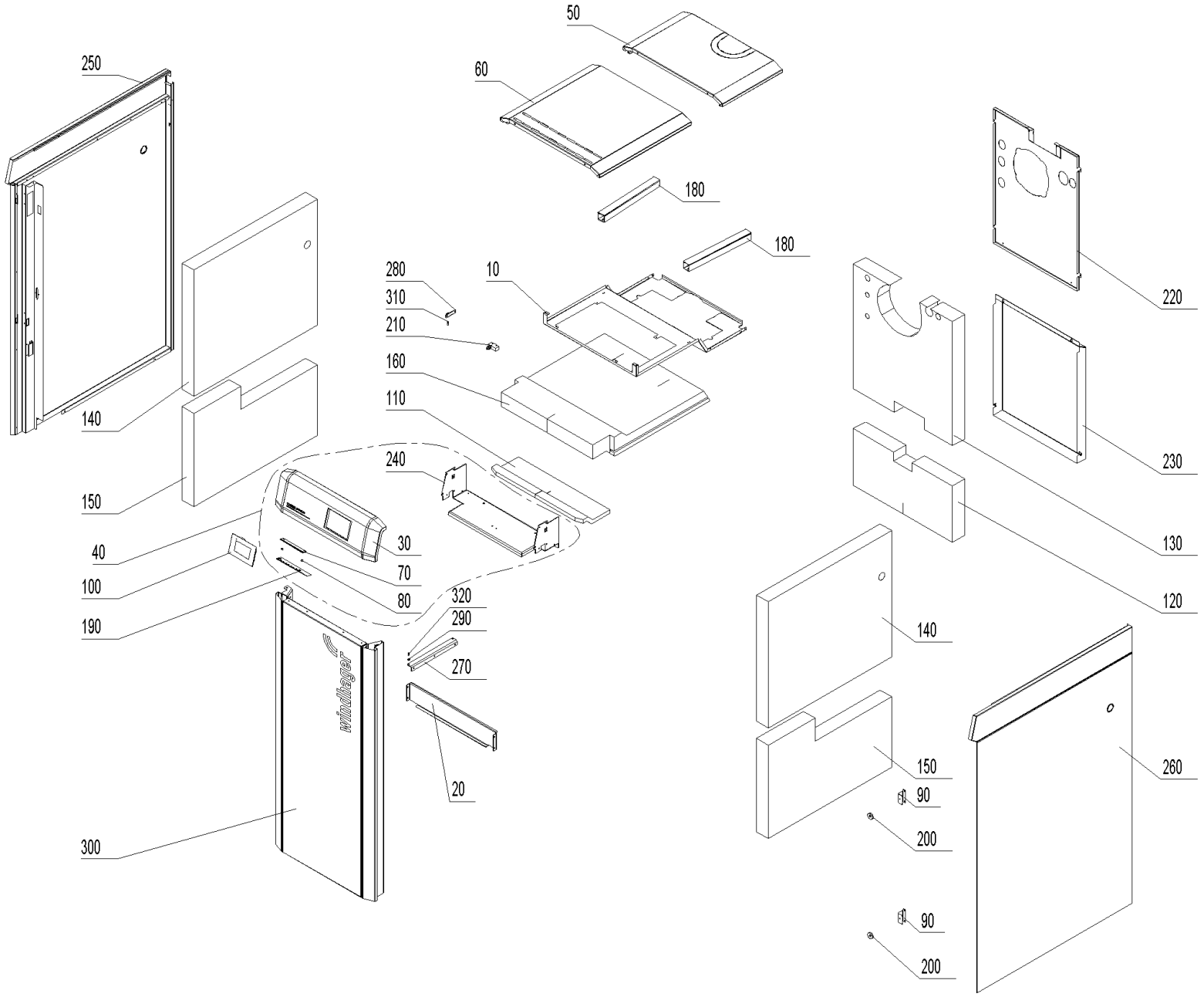

Cladding (A000139)

Item no.	Article no.	Description	Quantity	Unit
150	051222	Bottom left/right insulation	2.00	pcs
180	050837	Cable duct	2.00	pcs
10	054110	de: Abdeckblech Isolierung oben LWPT36-50	1.00	pcs
20	053766	de: Abdeckung Fühler LWPT 36-50	1.00	pcs
30	054138	de: Bedienfeld kpl. LWPT 36-50	1.00	pcs
50	054107	de: Deckel hinten LWPT 30-50	1.00	pcs
60	054106	de: Deckel vorne LWPT 30-50	1.00	pcs
70	007196	de: Diffuser LED-Streifen LWPT	1.00	pcs
80	009694	de: Distanzhülse Ø8xØ4,3x5,4	2.00	pcs
90	053753	de: Haltebügel Magnet LWPT 18-36	2.00	pcs
110	054184	de: Isolierung Bedienfeld LWPT 36-50	1.00	pcs
130	053988	de: Isolierung hinten oben LWPT 36-50	1.00	pcs
120	053986	de: Isolierung hinten unten LWPT 36-50	1.00	pcs
140	053989	de: Isolierung links/rechts oben LWPT 18-50	2.00	pcs
160	053987	de: Isolierung oben LWPT 36-50	1.00	pcs
170	009606	de: Kabel InfoWIN Touch auf LED-Streifen	1.00	pcs
190	012990	de: LED - Balken LWPT	1.00	pcs
200	001761	de: Magnet Ø31 gummiummantelt	2.00	pcs
220	053764	de: Rückwand oben LWPT 36-50	1.00	pcs
230	053765	de: Rückwand unten LWPT 36-50	1.00	pcs
240	053798	de: Schwelgasführung LWPT 30-50	1.00	pcs
250	054135	de: Seitenwand links LWPT 18-50	1.00	pcs

Cladding (A000139)

Item no.	Article no.	Description	Quantity	Unit
260	054136	de: Seitenwand rechts LWPT 18-50	1.00	pcs
270	051911	de: Türangel unten LWPT	1.00	pcs
280	051909	de: Türlager oben LWPT	1.00	pcs
300	054134	de: Verkleidungstür kpl. LWPT 36-50	1.00	pcs
320	033092	de: Zapfenschrauben M5X5	1.00	pcs
290	018309	Disc 5 DIN134	1.00	pcs
310	015507	Dog point screw	1.00	pcs
100	001009	INF8 MES INFINITY InfoWIN Touch	1.00	pcs
40	054152	LWP17 Bedienfeld zu LogWIN Premium 360-505T	1.00	pcs
210	007128	Microswitch Z-15GQ-B for LogWIN Premium 180-505, BioWIN XL 35-60	1.00	pcs

cleaning equipment (A000143)

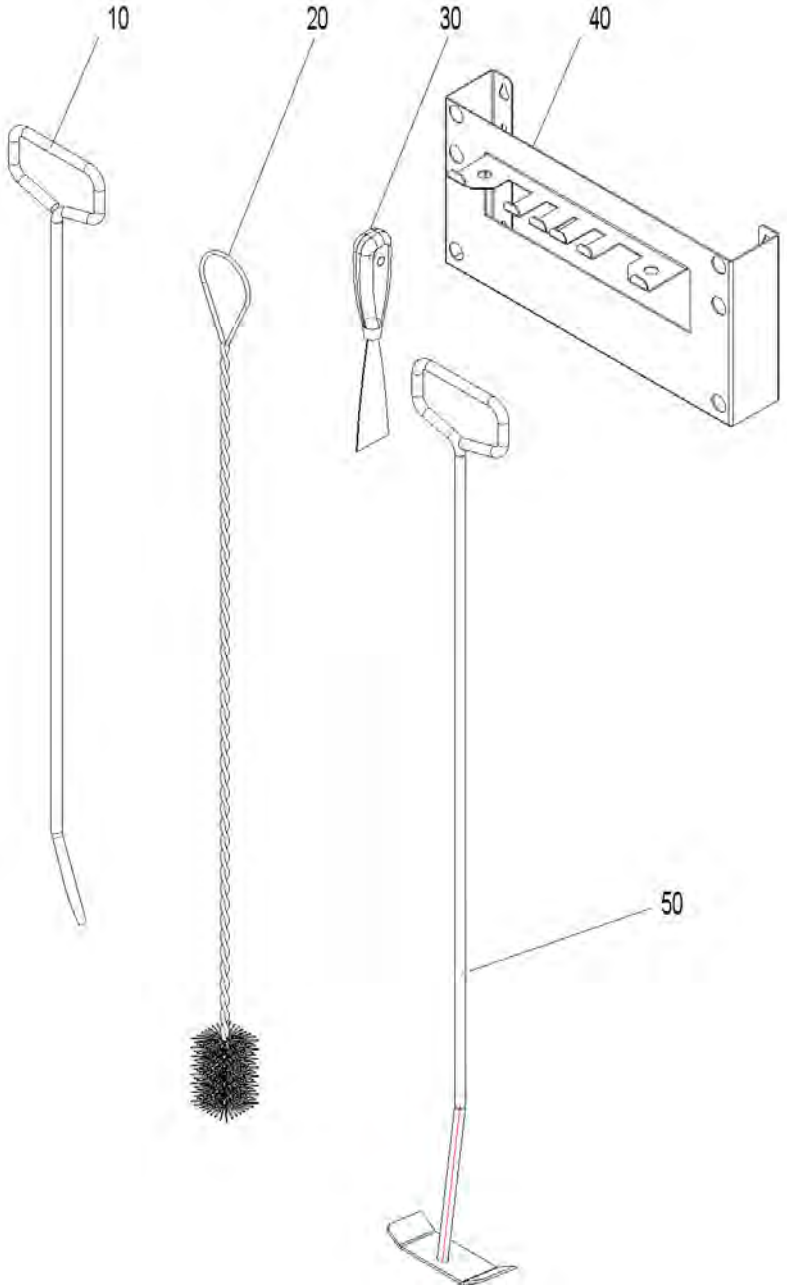

cleaning equipment (A000143)

Item no.	Article no.	Description	Quantity	Unit
50	040328	Cleaning rake for HMX,PMX, EasyWIN Klassik/Premium 180, LogWIN Premium 180-505	1.00	pcs
10	080664	FAX192 Poker for FAX,HMX,SilvaWIN,FKX,EasyWIN Klassik/Premium 180,LogWIN Premium 180-505	1.00	pcs
20	003088	GWX992 Cleaning brush 950x45mm/45x70 mm for GWX, LogWIN Premium 180-505, EasyWIN Klassik/Premium 180	1.00	pcs
40	042743	Holder for cleaning equipments for VarioWIN, LogWIN Premium 180-505,SilvaWIN,BioWIN XL35-60,EasWIN Klassik/Premium 180	1.00	pcs
30	009540	Spatula	1.00	pcs

combustion chamber (A000142)

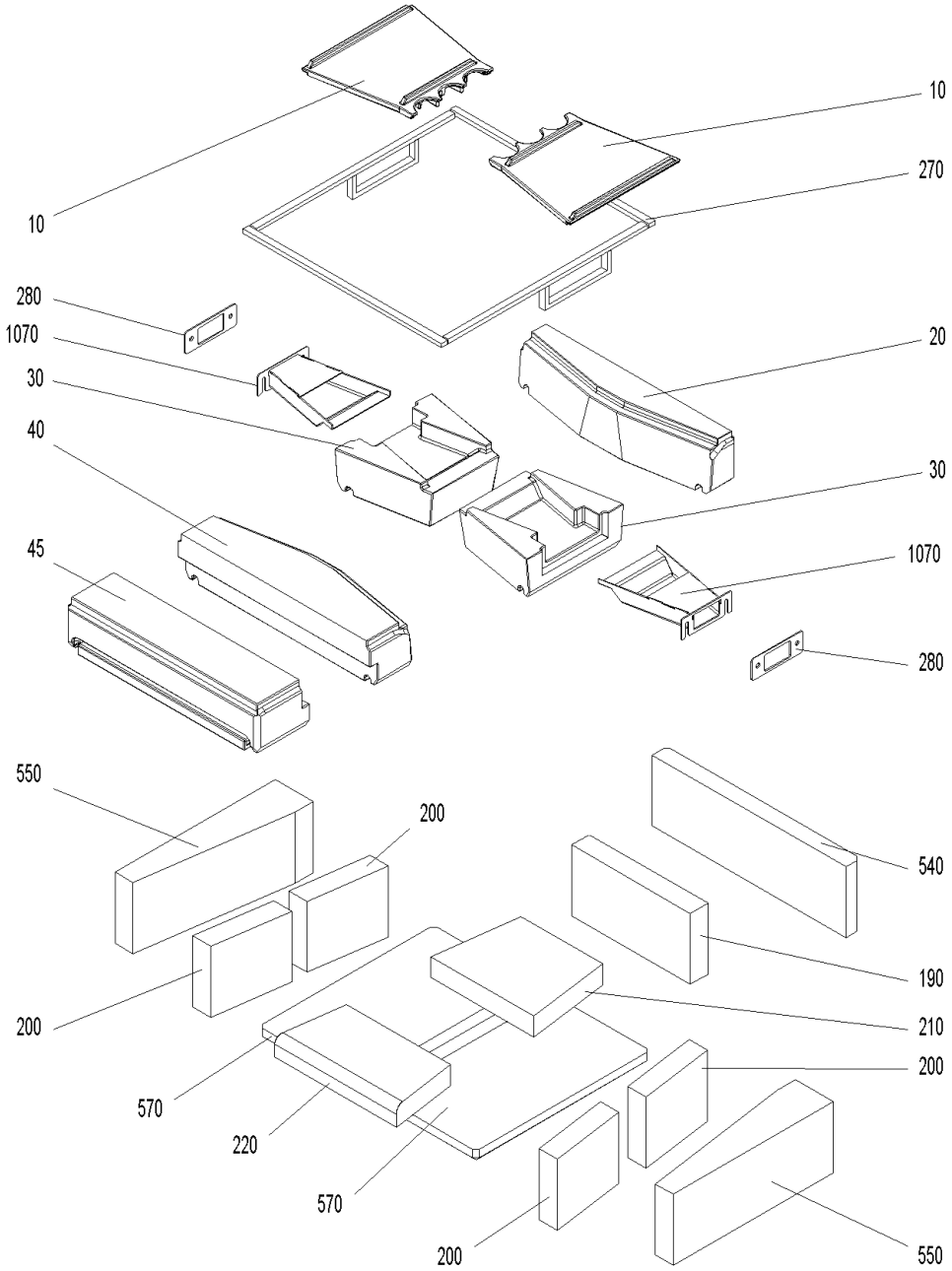

combustion chamber (A000142)

Item no.	Article no.	Description	Quantity	Unit
220	007409	Bottom front combustion chamber stone for LogWIN Premium 360-505	1.00	pcs
210	007408	Bottom rear combustion chamber stone for LogWIN Premium 360-505	1.00	pcs
10	007414	Burning plate for LogWIN Premium 360-505	1.00	pcs
30	007400	Burning stone left/right for LogWIN Premium 360-505	2.00	pcs
40	007399	Centre burning stone for LogWIN Premium 360-505	1.00	pcs
200	051233	Combustion chamber stone left/right LWK	4.00	pcs
570	051733	de: Isolierstein unten Material Vermiculite zu LWP	2.00	pcs
45	007398	Front burning stone for LogWIN Premium 360-505	1.00	pcs
550	051234	Insulating stone left/right LWK	2.00	pcs
20	007401	Rear burning stone for LogWIN Premium 360-505	1.00	pcs
190	007407	Rear combustion chamber stone for LogWIN Premium 360-505	1.00	pcs
540	007403	Rear insulating stone for LogWIN Premium 360-505	1.00	pcs
270	046120	Rope seal kit for burning stones for LogWIN Premium 360-505	1.00	pcs
280	007415	Seal for secondary air nozzle 142x52x3mm for LogWIN Premium 360-505	2.00	pcs
1070	045640	Secondary air nozzle complete for LogWIN Premium 360-505	2.00	pcs

Control panel (A000140)

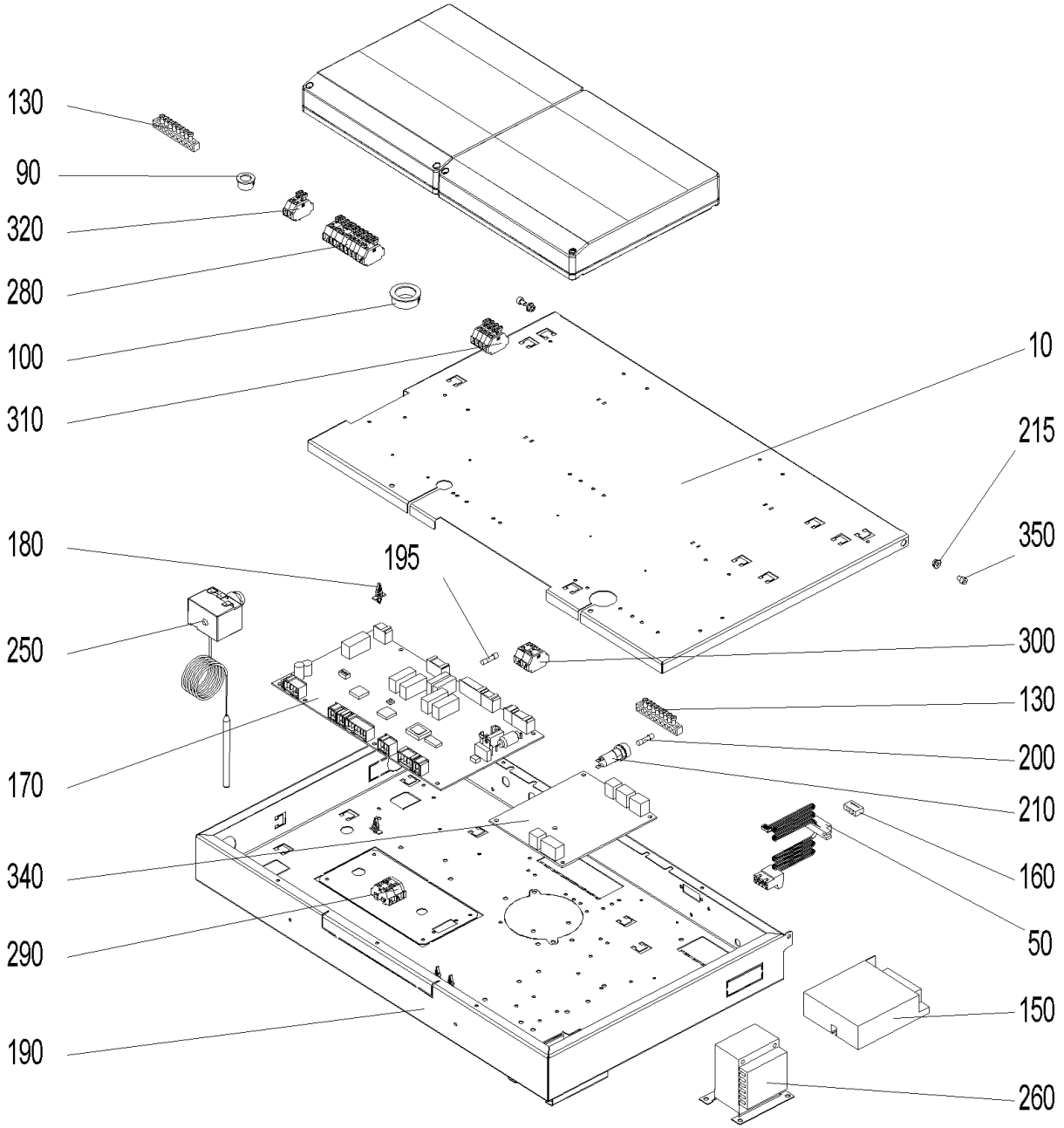

Control panel (A000140)

Item no.	Article no.	Description	Quantity	Unit
200	003228	6.3A fuse (not illustrated)	2.00	pcs
90	009542	Cable feed-through	1.00	pcs
10	053779	de: Deckel Schaltfeld BW2T, LWPT	1.00	pcs
20	054311	de: Flachbandkabel vorm. LWPT	1.00	pcs
30	054313	de: Fühlerset vorm. LWPT	1.00	pcs
50	009605	de: Kabel - LON LWPT, BWXL2, BW2, BW2T	1.00	pcs
100	009536	de: Kabeldurchführung 2160 schwarz Ø 28	1.00	pcs
120	054315	de: Kabelsatz 230V SB LWPT	1.00	pcs
190	052994	de: Schaltfeld Unterteil BW2T, LWPT	1.00	pcs
215	016564	de: Sperrzahnmutter M4 verzinkt	1.00	pcs
270	054314	de: Trafo O2-Sonde vorm. LWPT	1.00	pcs
310	006835	de: Wagoblock 261 5tlg."ext. Wärme" 1-4 PMX, BW2T, LWPT	1.00	pcs
330	009334	de: Zugentlastung 3 pol.f.Bu. Z7.419.2153.OSW	1.00	pcs
40	054155	de: Zuleitungskabel LWPT	1.00	pcs
350	016782	de: Zylinderschraube m. Innensechskant ISO 4762 - M 4 x 10 - 8.8 - verzinkt (DIN 912)	1.00	pcs
80	048419	Draught fan cable (not illustrated)	1.00	pcs
340	007095	Extra PCB for O2-mesure or pumping rotation speed control for BioWIN cascade, LogWIN Premium 180-505	1.00	pcs
170	011999	FMF PCB for LogWIN Premium 180-505	1.00	pcs
195	006900	Fuse 1 A T 5x20 ceramic tube	2.00	pcs
210	003663	Fuse holder	1.00	pcs
70	007165	Lambda sensor cable (not illustrated)	1.00	pcs
140	041430	Mains connection socket 3-pin for MIRA,ETX,PMX,BioWIN10-26,LogWIN Premium	1.00	pcs

Control panel (A000140)

Item no.	Article no.	Description	Quantity	Unit
		180-505,EasyWIN Premium 180,BioWIN XL 35-60, FireWIN		
230	502186	MES009M Immersion sensor	1.00	pcs
180	007609	PCB holder	12.00	pcs
160	005784	Pin connector (not illustrated)	1.00	pcs
220	009318	Plug ST18/3S sw wie for LogWIN Premium 180-505	1.00	pcs
60	002059	Power supply cable (not illustrated)	1.00	pcs
150	051645	Power supply unit 12V	1.00	pcs
130	009929	Terminal bar MS 8-pin 8x8mm for VarioWIN,FireWIN, BioWIN XL 35-60	2.00	pcs
240	007626	Thermocouple	1.00	pcs
250	005672	Thermostat LS1+100-6U	1.00	pcs
260	007096	Transformer for O2 sensor 18VA for LogWIN Premium 180-505	1.00	pcs
320	009948	Wago terminal block 261; 2-pin WMS 1-2, 3-piece for VarioWIN, FireWIN	1.00	pcs
290	006833	Wago terminal block 261; 4-pin "12V GND"	1.00	pcs
300	006834	Wago terminal block 261; 4-pin "safety 1-4"	1.00	pcs
280	009891	Wago terminal block 261; 11-pin safety 1-11 for FireWIN, VarioWIN	1.00	pcs

Boiler (A000137)

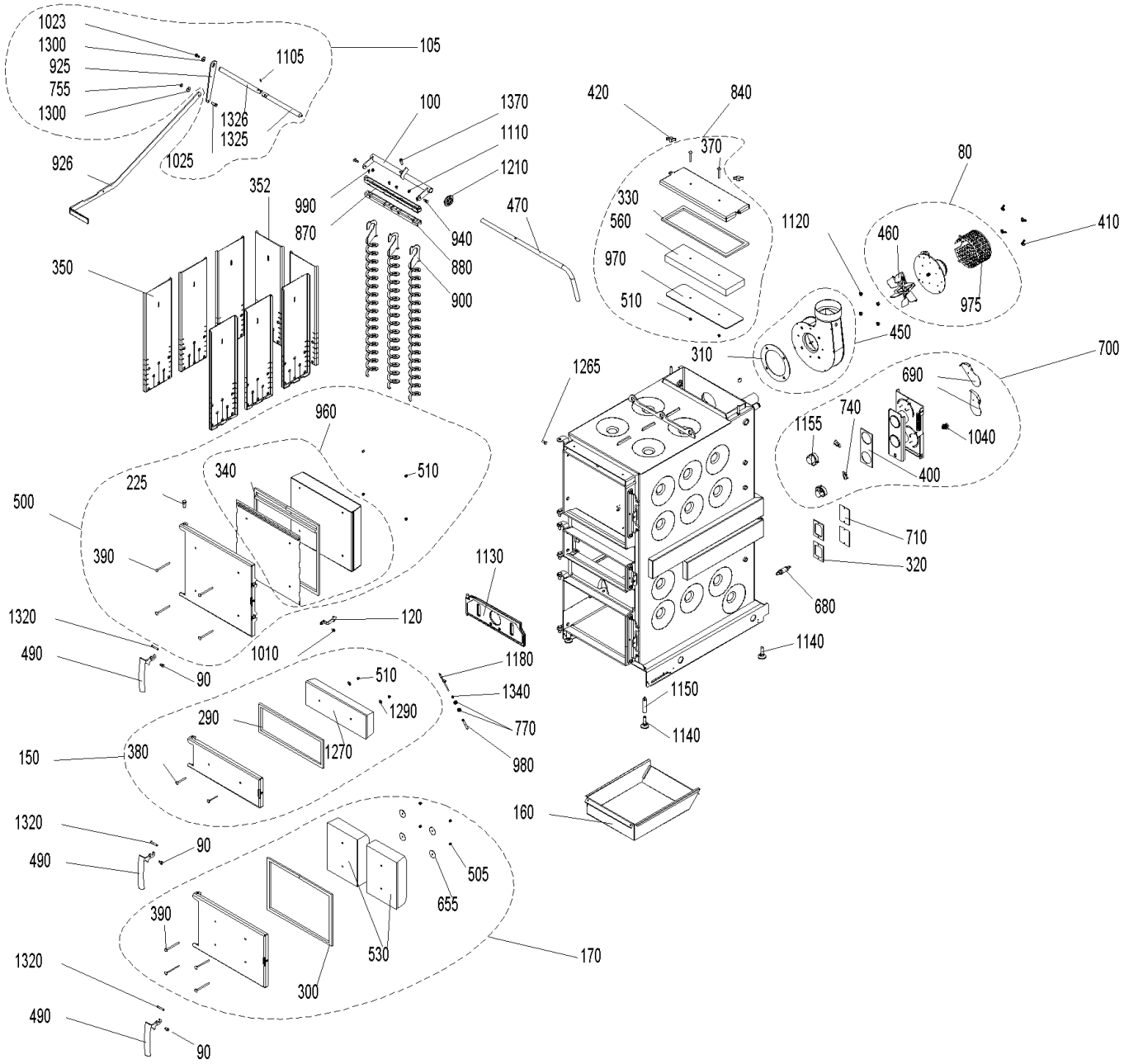

Boiler (A000137)

Item no.	Article no.	Description	Quantity	Unit
690	040032	Air choke	2.00	pcs
740	009277	Air control microswitch	2.00	pcs
170	051563	Ash door, complete LWK	1.00	pcs
300	046268	Ash door seal LWP18-50, LWK	1.00	pcs
160	045419	Ash pan LWP18-50, LWK	1.00	pcs
90	048881	Axle for door handle CK45	2.00	pcs
450	051577	Blower box, complete LWK	1.00	pcs
310	050825	Blower seal LWK	1.00	pcs
460	053032	Blower wheel	1.00	pcs
490	048811	Boiler handle	3.00	pcs
505	016192	Cap nut	4.00	pcs
510	025968	Cap nut M6	1.00	pcs
900	046322	Cleaning auger for LogWIN Premium 180-505	6.00	pcs
1370	017046	Cyl. screw M 8X30	1.00	pcs
100	045754	de: Achse für Heizflächenreinigung LWP50, LWPT36-50	1.00	pcs
120	052728	de: Anlüftsicherungshaken rot LWPT	1.00	pcs
330	054139	de: Dichtung für Reinigungsdeckel LWPT	1.00	pcs
560	051737	de: Isolierstein Reinigungsdeckel Vermiculite LWPT36-50	1.00	pcs
700	054194	de: Luftregler kpl. mont. LWPT	1.00	pcs
840	054140	de: Reinigungsdeckel kpl. lack. LWPT 36-50	1.00	pcs
870	054141	de: Reinigungsprofil oben LWPT 36-50	1.00	pcs
880	054142	de: Reinigungsprofil unten LWPT 36-50	1.00	pcs

Boiler (A000137)

Item no.	Article no.	Description	Quantity	Unit
970	054144	de: Schutzblech Reinigungsdeckel lackiert LWPT 36-50	1.00	pcs
1290	031753	Disc 6 ISO 7093	1.00	pcs
225	033104	Door mounting bolt ISO 2341-A - 12x32	1.00	pcs
1265	051671	Door screw M8	1.00	pcs
1010	051671	Door screw M8	1.00	pcs
1270	050590	Door stone for lighting door LWK	1.00	pcs
400	009305	Flange seal LWP18-50, LWK	1.00	pcs
80	051661	Flue gas blower, complete for LWK	1.00	pcs
975	010882	Flue gas blower protection hood LWK	1.00	pcs
1140	009994	Foot M12X40 JTB38 for HMX, EasyWIN Klassik/Premium 180, LogWIN Premium 180-505	4.00	pcs
1210	048812	Grommet for EasyWIN, LogWIN Premium 180-505	1.00	pcs
470	045746	Handle for cleaning heating surfaces for LogWIN Premium 360-505	1.00	pcs
500	051579	Heating door, complete LWK	1.00	pcs
960	053240	Heating door protection plate LWK	1.00	pcs
340	051568	Heating door seal set LWK	1.00	pcs
1120	016553	Hexagon nut M8 with flange and gearing	4.00	pcs
770	031156	Hexagon nut M10 DIN 439	2.00	pcs
1110	016566	Hexagon nut with flange and gearing M6	1.00	pcs
990	031545	Hexagon screw M5x12 DIN 7500 (not ilustrated)	1.00	pcs
1010	031549	Hexagon screw M6x12 DIN 7500	1.00	pcs
1040	017205	Hexagon screws M12x25-8.8	1.00	pcs
350	045431	Hook-in plate for LogWIN Premium 180-505	6.00	pcs

Boiler (A000137)

Item no.	Article no.	Description	Quantity	Unit
530	050585	Insulating stone AT LWK	2.00	pcs
680	051646	Lambda sensor	1.00	pcs
1150	007453	Leg extension for LogWIN Premium 180-505, EasyWIN Klassik/Premium 180	2.00	pcs
150	051564	Lighting door, complete	1.00	pcs
290	046267	Lighting door seal LWP18-50, LW	1.00	pcs
1320	050568	Locking axle LWK	3.00	pcs
352	045737	Rear hook-in plate for LogWIN Premium 360-505	3.00	pcs
370	016178	Round-head screw M6x55	2.00	pcs
380	016186	Round-head screw M6x60	2.00	pcs
390	016190	Round-head screw M6x90	4.00	pcs
940	006756	Screw M6 for heating surface cleaning for PMX,BioWIN 10-26,FireWIN, BioWIN XL 35-60, LogWIN Premium 180-505	2.00	pcs
320	009378	Seal for vent cover LWP18-50, LWK	4.00	pcs
1155	040429	Servomotor for HMX, SilvaWIN, LogWIN Premium 180-505	2.00	pcs
1340	007164	Tension spring	1.00	pcs
980	051231	Thermocontrol sensor protective tube LWK	1.00	pcs
1180	007626	Thermocouple	1.00	pcs
710	046338	Vent cover	4.00	pcs
1130	051162	Vertical grate LWK/LWP	1.00	pcs
655	016191	Washer M6 4x40x1,5	4.00	pcs
410	019410	Wing nut M6	4.00	pcs
420	007366	Wing nut M8	2.00	pcs

Cladding (A000139)

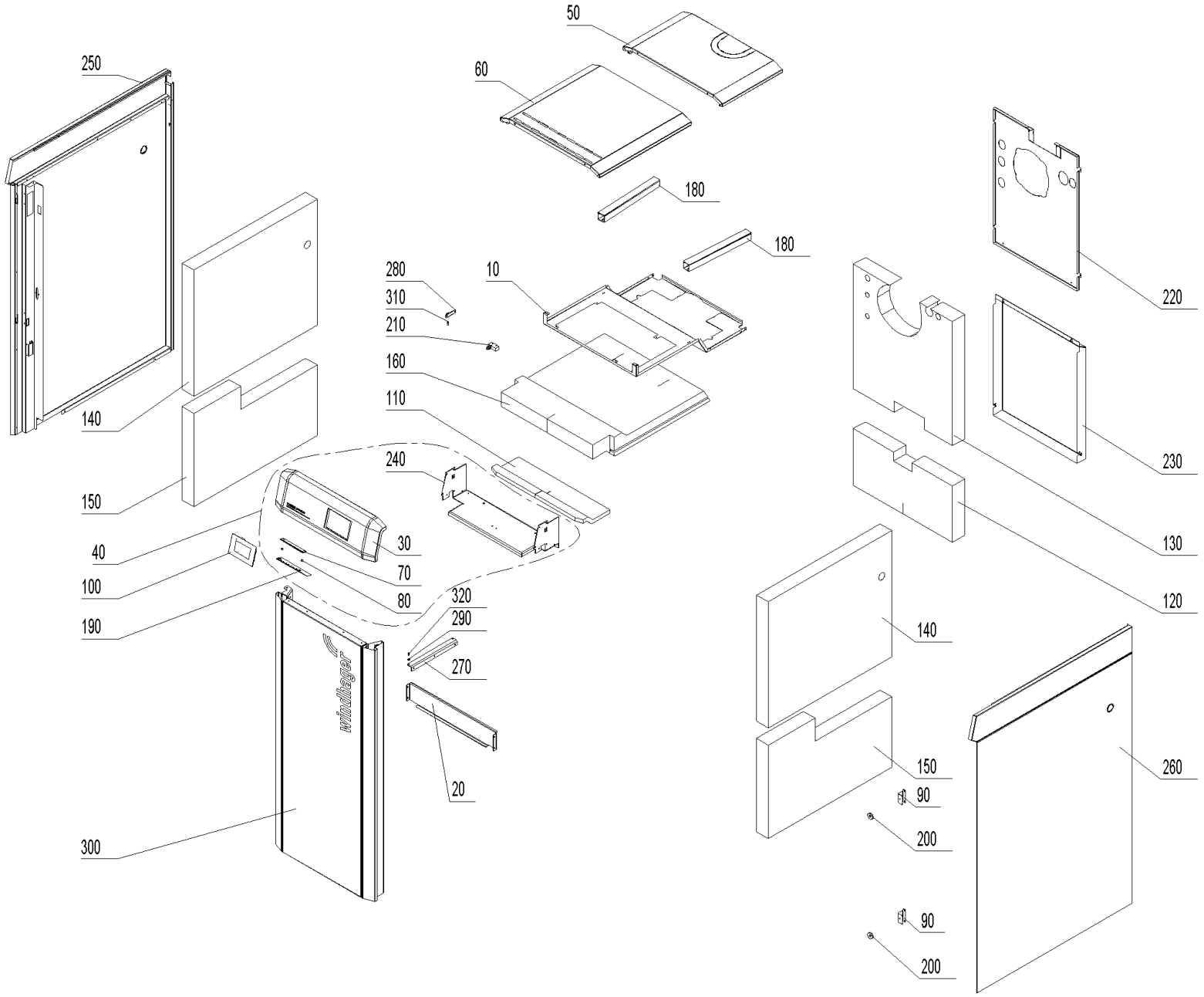

Cladding (A000139)

Item no.	Article no.	Description	Quantity	Unit
150	051222	Bottom left/right insulation	2.00	pcs
180	050837	Cable duct	2.00	pcs
10	054110	de: Abdeckblech Isolierung oben LWPT36-50	1.00	pcs
20	053766	de: Abdeckung Fühler LWPT 36-50	1.00	pcs
30	054138	de: Bedienfeld kpl. LWPT 36-50	1.00	pcs
50	054107	de: Deckel hinten LWPT 30-50	1.00	pcs
60	054106	de: Deckel vorne LWPT 30-50	1.00	pcs
70	007196	de: Diffuser LED-Streifen LWPT	1.00	pcs
80	009694	de: Distanzhülse Ø8xØ4,3x5,4	2.00	pcs
90	053753	de: Haltebügel Magnet LWPT 18-36	2.00	pcs
110	054184	de: Isolierung Bedienfeld LWPT 36-50	1.00	pcs
130	053988	de: Isolierung hinten oben LWPT 36-50	1.00	pcs
120	053986	de: Isolierung hinten unten LWPT 36-50	1.00	pcs
140	053989	de: Isolierung links/rechts oben LWPT 18-50	2.00	pcs
160	053987	de: Isolierung oben LWPT 36-50	1.00	pcs
170	009606	de: Kabel InfoWIN Touch auf LED-Streifen	1.00	pcs
190	012990	de: LED - Balken LWPT	1.00	pcs
200	001761	de: Magnet Ø31 gummiummantelt	2.00	pcs
220	053764	de: Rückwand oben LWPT 36-50	1.00	pcs
230	053765	de: Rückwand unten LWPT 36-50	1.00	pcs
240	053798	de: Schwelgasführung LWPT 30-50	1.00	pcs
250	054135	de: Seitenwand links LWPT 18-50	1.00	pcs

Cladding (A000139)

Item no.	Article no.	Description	Quantity	Unit
260	054136	de: Seitenwand rechts LWPT 18-50	1.00	pcs
270	051911	de: Türangel unten LWPT	1.00	pcs
280	051909	de: Türlager oben LWPT	1.00	pcs
300	054134	de: Verkleidungstür kpl. LWPT 36-50	1.00	pcs
320	033092	de: Zapfenschrauben M5X5	1.00	pcs
290	018309	Disc 5 DIN134	1.00	pcs
310	015507	Dog point screw	1.00	pcs
100	001009	INF8 MES INFINITY InfoWIN Touch	1.00	pcs
40	054152	LWP17 Bedienfeld zu LogWIN Premium 360-505T	1.00	pcs
210	007128	Microswitch Z-15GQ-B for LogWIN Premium 180-505, BioWIN XL 35-60	1.00	pcs

cleaning equipment (A000143)

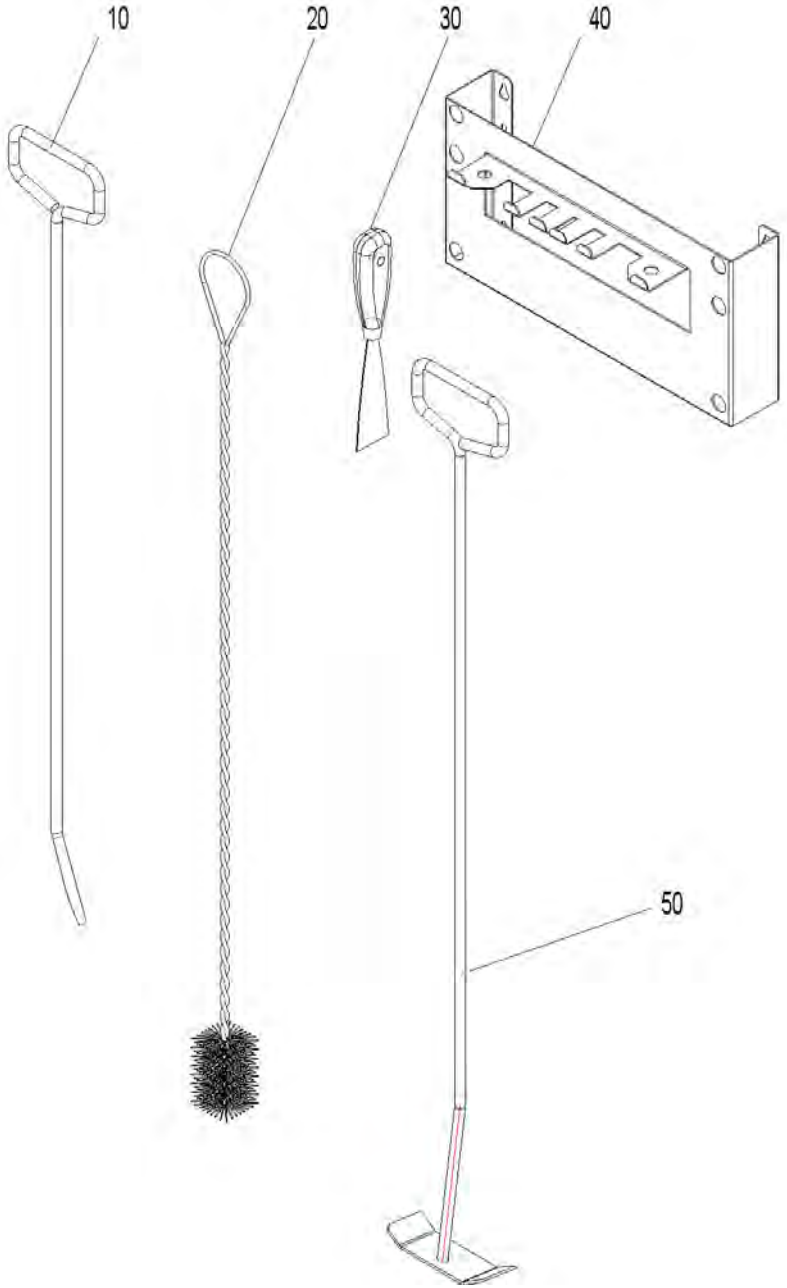

cleaning equipment (A000143)

Item no.	Article no.	Description	Quantity	Unit
50	040328	Cleaning rake for HMX,PMX, EasyWIN Klassik/Premium 180, LogWIN Premium 180-505	1.00	pcs
10	080664	FAX192 Poker for FAX,HMX,SilvaWIN,FKX,EasyWIN Klassik/Premium 180,LogWIN Premium 180-505	1.00	pcs
20	003088	GWX992 Cleaning brush 950x45mm/45x70 mm for GWX, LogWIN Premium 180-505, EasyWIN Klassik/Premium 180	1.00	pcs
40	042743	Holder for cleaning equipments for VarioWIN, LogWIN Premium 180-505,SilvaWIN,BioWIN XL35-60,EasWIN Klassik/Premium 180	1.00	pcs
30	009540	Spatula	1.00	pcs

combustion chamber (A000142)

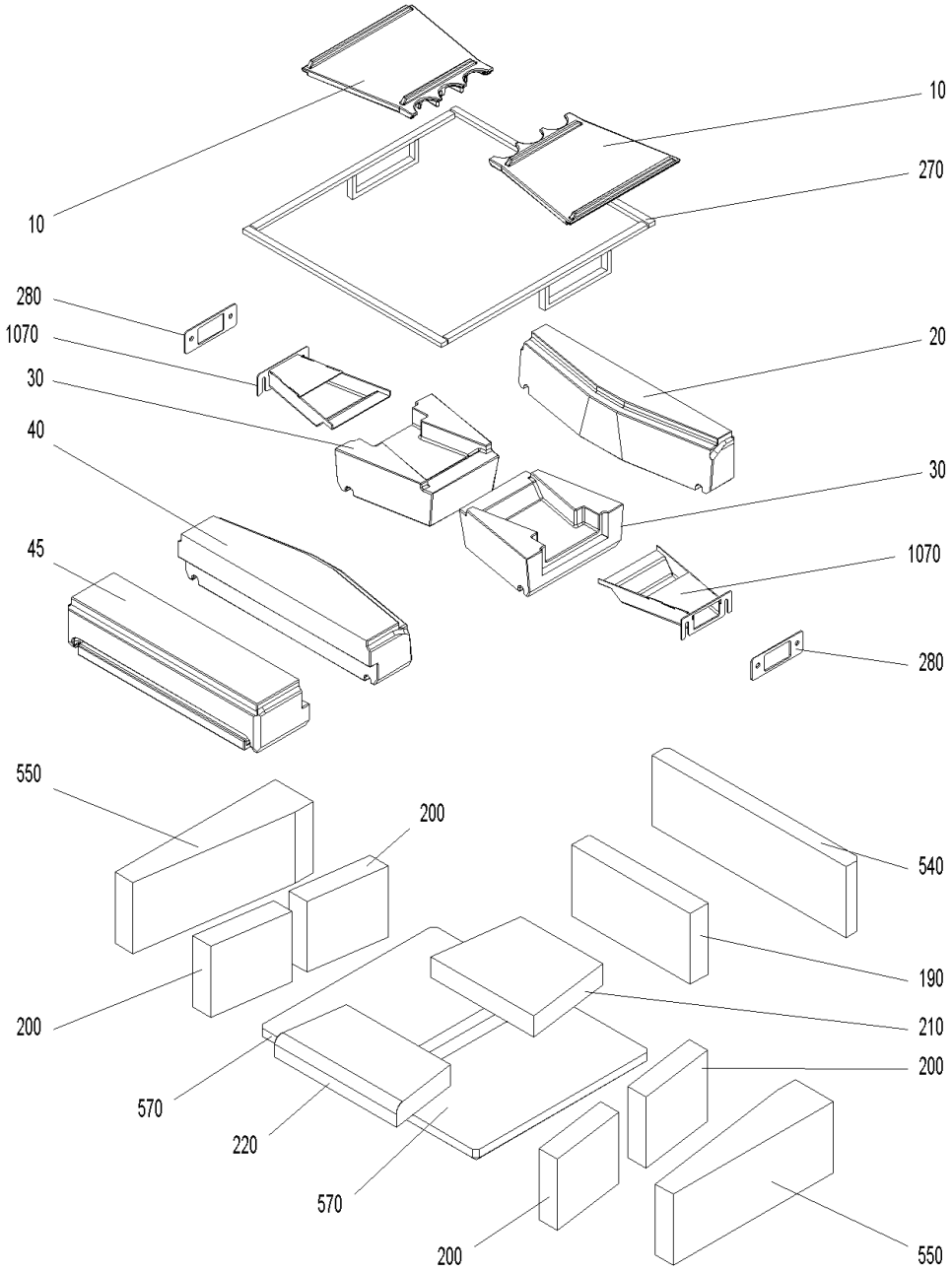

combustion chamber (A000142)

Item no.	Article no.	Description	Quantity	Unit
220	007409	Bottom front combustion chamber stone for LogWIN Premium 360-505	1.00	pcs
210	007408	Bottom rear combustion chamber stone for LogWIN Premium 360-505	1.00	pcs
10	007414	Burning plate for LogWIN Premium 360-505	1.00	pcs
30	007400	Burning stone left/right for LogWIN Premium 360-505	2.00	pcs
40	007399	Centre burning stone for LogWIN Premium 360-505	1.00	pcs
200	051233	Combustion chamber stone left/right LWK	4.00	pcs
570	051733	de: Isolierstein unten Material Vermiculite zu LWP	2.00	pcs
45	007398	Front burning stone for LogWIN Premium 360-505	1.00	pcs
550	051234	Insulating stone left/right LWK	2.00	pcs
20	007401	Rear burning stone for LogWIN Premium 360-505	1.00	pcs
190	007407	Rear combustion chamber stone for LogWIN Premium 360-505	1.00	pcs
540	007403	Rear insulating stone for LogWIN Premium 360-505	1.00	pcs
270	046120	Rope seal kit for burning stones for LogWIN Premium 360-505	1.00	pcs
280	007415	Seal for secondary air nozzle 142x52x3mm for LogWIN Premium 360-505	2.00	pcs
1070	045640	Secondary air nozzle complete for LogWIN Premium 360-505	2.00	pcs

Control panel (A000140)

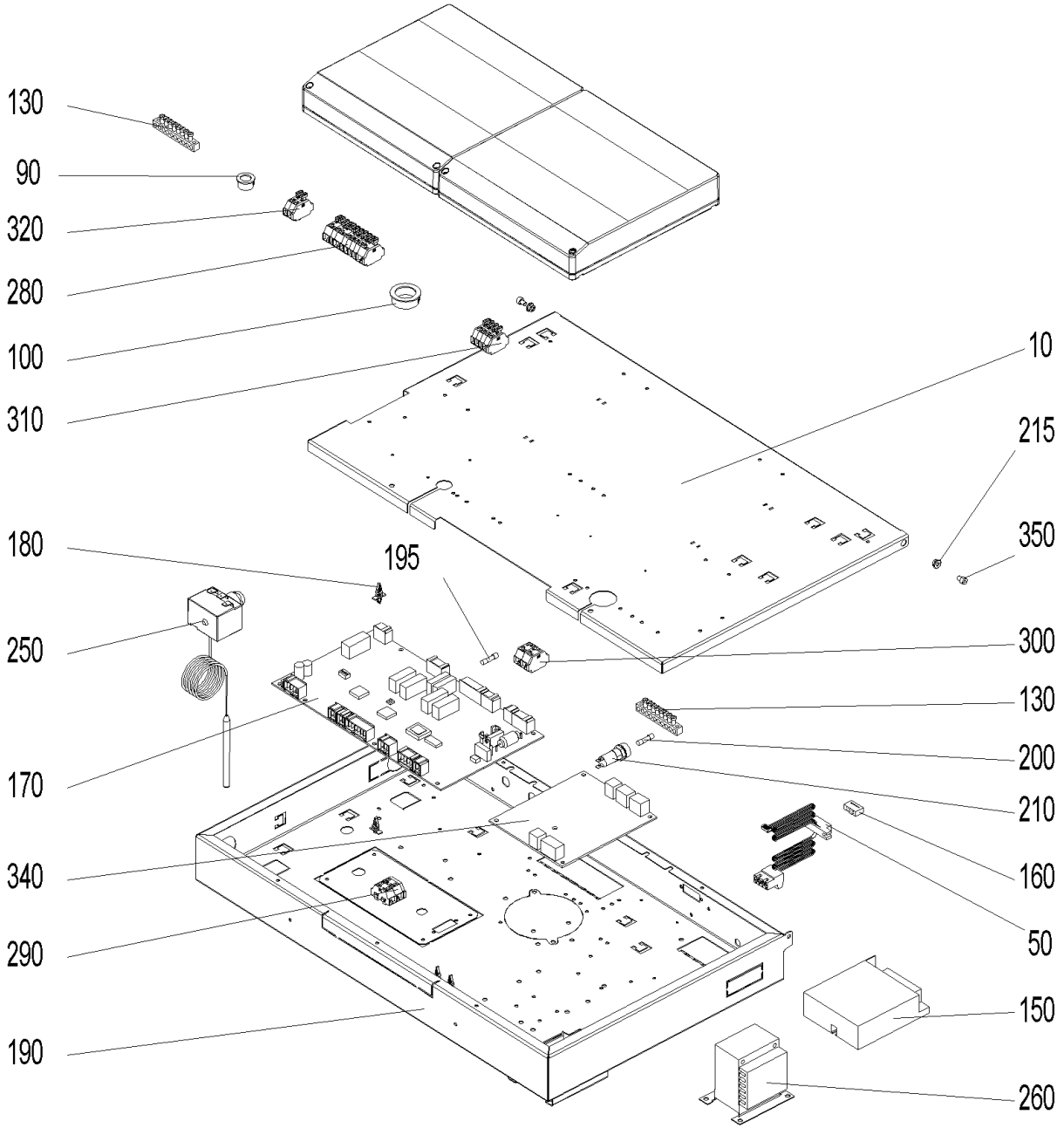

Control panel (A000140)

Item no.	Article no.	Description	Quantity	Unit
200	003228	6.3A fuse (not illustrated)	2.00	pcs
90	009542	Cable feed-through	1.00	pcs
10	053779	de: Deckel Schaltfeld BW2T, LWPT	1.00	pcs
20	054311	de: Flachbandkabel vorm. LWPT	1.00	pcs
30	054313	de: Fühlerset vorm. LWPT	1.00	pcs
50	009605	de: Kabel - LON LWPT, BWXL2, BW2, BW2T	1.00	pcs
100	009536	de: Kabeldurchführung 2160 schwarz Ø 28	1.00	pcs
120	054315	de: Kabelsatz 230V SB LWPT	1.00	pcs
190	052994	de: Schaltfeld Unterteil BW2T, LWPT	1.00	pcs
215	016564	de: Sperrzahnmutter M4 verzinkt	1.00	pcs
270	054314	de: Trafo O2-Sonde vorm. LWPT	1.00	pcs
310	006835	de: Wagoblock 261 5tlg."ext. Wärme" 1-4 PMX, BW2T, LWPT	1.00	pcs
330	009334	de: Zugentlastung 3 pol.f.Bu. Z7.419.2153.OSW	1.00	pcs
40	054155	de: Zuleitungskabel LWPT	1.00	pcs
350	016782	de: Zylinderschraube m. Innensechskant ISO 4762 - M 4 x 10 - 8.8 - verzinkt (DIN 912)	1.00	pcs
80	048419	Draught fan cable (not illustrated)	1.00	pcs
340	007095	Extra PCB for O2-mesure or pumping rotation speed control for BioWIN cascade, LogWIN Premium 180-505	1.00	pcs
170	011999	FMF PCB for LogWIN Premium 180-505	1.00	pcs
195	006900	Fuse 1 A T 5x20 ceramic tube	2.00	pcs
210	003663	Fuse holder	1.00	pcs
70	007165	Lambda sensor cable (not illustrated)	1.00	pcs
140	041430	Mains connection socket 3-pin for MIRA,ETX,PMX,BioWIN10-26,LogWIN Premium	1.00	pcs

Control panel (A000140)

Item no.	Article no.	Description	Quantity	Unit
		180-505,EasyWIN Premium 180,BioWIN XL 35-60, FireWIN		
230	502186	MES009M Immersion sensor	1.00	pcs
180	007609	PCB holder	12.00	pcs
160	005784	Pin connector (not illustrated)	1.00	pcs
220	009318	Plug ST18/3S sw wie for LogWIN Premium 180-505	1.00	pcs
60	002059	Power supply cable (not illustrated)	1.00	pcs
150	051645	Power supply unit 12V	1.00	pcs
130	009929	Terminal bar MS 8-pin 8x8mm for VarioWIN,FireWIN, BioWIN XL 35-60	2.00	pcs
240	007626	Thermocouple	1.00	pcs
250	005672	Thermostat LS1+100-6U	1.00	pcs
260	007096	Transformer for O2 sensor 18VA for LogWIN Premium 180-505	1.00	pcs
320	009948	Wago terminal block 261; 2-pin WMS 1-2, 3-piece for VarioWIN, FireWIN	1.00	pcs
290	006833	Wago terminal block 261; 4-pin "12V GND"	1.00	pcs
300	006834	Wago terminal block 261; 4-pin "safety 1-4"	1.00	pcs
280	009891	Wago terminal block 261; 11-pin safety 1-11 for FireWIN, VarioWIN	1.00	pcs

Boiler (A000137)

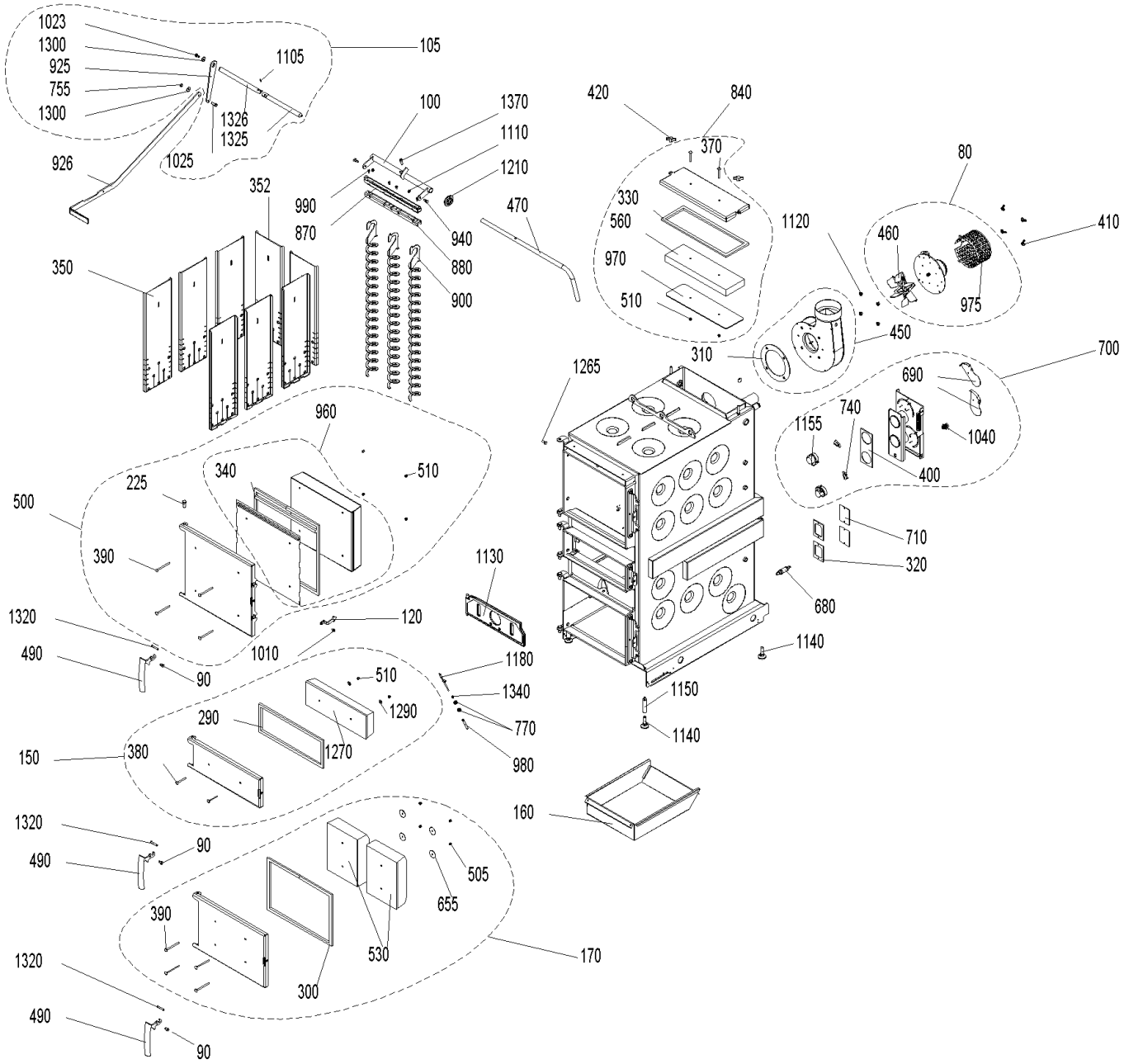

Boiler (A000137)

Item no.	Article no.	Description	Quantity	Unit
690	040032	Air choke	2.00	pcs
740	009277	Air control microswitch	2.00	pcs
170	051563	Ash door, complete LWK	1.00	pcs
300	046268	Ash door seal LWP18-50, LWK	1.00	pcs
160	045419	Ash pan LWP18-50, LWK	1.00	pcs
90	048881	Axle for door handle CK45	2.00	pcs
450	051577	Blower box, complete LWK	1.00	pcs
310	050825	Blower seal LWK	1.00	pcs
460	053032	Blower wheel	1.00	pcs
490	048811	Boiler handle	3.00	pcs
505	016192	Cap nut	4.00	pcs
510	025968	Cap nut M6	1.00	pcs
900	046322	Cleaning auger for LogWIN Premium 180-505	6.00	pcs
1370	017046	Cyl. screw M 8X30	1.00	pcs
100	045754	de: Achse für Heizflächenreinigung LWP50, LWPT36-50	1.00	pcs
120	052728	de: Anlüftsicherungshaken rot LWPT	1.00	pcs
330	054139	de: Dichtung für Reinigungsdeckel LWPT	1.00	pcs
560	051737	de: Isolierstein Reinigungsdeckel Vermiculite LWPT36-50	1.00	pcs
700	054194	de: Luftregler kpl. mont. LWPT	1.00	pcs
840	054140	de: Reinigungsdeckel kpl. lack. LWPT 36-50	1.00	pcs
870	054141	de: Reinigungsprofil oben LWPT 36-50	1.00	pcs
880	054142	de: Reinigungsprofil unten LWPT 36-50	1.00	pcs

Boiler (A000137)

Item no.	Article no.	Description	Quantity	Unit
970	054144	de: Schutzblech Reinigungsdeckel lackiert LWPT 36-50	1.00	pcs
1290	031753	Disc 6 ISO 7093	1.00	pcs
225	033104	Door mounting bolt ISO 2341-A - 12x32	1.00	pcs
1265	051671	Door screw M8	1.00	pcs
1010	051671	Door screw M8	1.00	pcs
1270	050590	Door stone for lighting door LWK	1.00	pcs
400	009305	Flange seal LWP18-50, LWK	1.00	pcs
80	051661	Flue gas blower, complete for LWK	1.00	pcs
975	010882	Flue gas blower protection hood LWK	1.00	pcs
1140	009994	Foot M12X40 JTB38 for HMX, EasyWIN Klassik/Premium 180, LogWIN Premium 180-505	4.00	pcs
1210	048812	Grommet for EasyWIN, LogWIN Premium 180-505	1.00	pcs
470	045746	Handle for cleaning heating surfaces for LogWIN Premium 360-505	1.00	pcs
500	051579	Heating door, complete LWK	1.00	pcs
960	053240	Heating door protection plate LWK	1.00	pcs
340	051568	Heating door seal set LWK	1.00	pcs
1120	016553	Hexagon nut M8 with flange and gearing	4.00	pcs
770	031156	Hexagon nut M10 DIN 439	2.00	pcs
1110	016566	Hexagon nut with flange and gearing M6	1.00	pcs
990	031545	Hexagon screw M5x12 DIN 7500 (not ilustrated)	1.00	pcs
1010	031549	Hexagon screw M6x12 DIN 7500	1.00	pcs
1040	017205	Hexagon screws M12x25-8.8	1.00	pcs
350	045431	Hook-in plate for LogWIN Premium 180-505	6.00	pcs

Boiler (A000137)

Item no.	Article no.	Description	Quantity	Unit
530	050585	Insulating stone AT LWK	2.00	pcs
680	051646	Lambda sensor	1.00	pcs
1150	007453	Leg extension for LogWIN Premium 180-505, EasyWIN Klassik/Premium 180	2.00	pcs
150	051564	Lighting door, complete	1.00	pcs
290	046267	Lighting door seal LWP18-50, LW	1.00	pcs
1320	050568	Locking axle LWK	3.00	pcs
352	045737	Rear hook-in plate for LogWIN Premium 360-505	3.00	pcs
370	016178	Round-head screw M6x55	2.00	pcs
380	016186	Round-head screw M6x60	2.00	pcs
390	016190	Round-head screw M6x90	4.00	pcs
940	006756	Screw M6 for heating surface cleaning for PMX,BioWIN 10-26,FireWIN, BioWIN XL 35-60, LogWIN Premium 180-505	2.00	pcs
320	009378	Seal for vent cover LWP18-50, LWK	4.00	pcs
1155	040429	Servomotor for HMX, SilvaWIN, LogWIN Premium 180-505	2.00	pcs
1340	007164	Tension spring	1.00	pcs
980	051231	Thermocontrol sensor protective tube LWK	1.00	pcs
1180	007626	Thermocouple	1.00	pcs
710	046338	Vent cover	4.00	pcs
1130	051162	Vertical grate LWK/LWP	1.00	pcs
655	016191	Washer M6 4x40x1,5	4.00	pcs
410	019410	Wing nut M6	4.00	pcs
420	007366	Wing nut M8	2.00	pcs

Cladding (A000139)

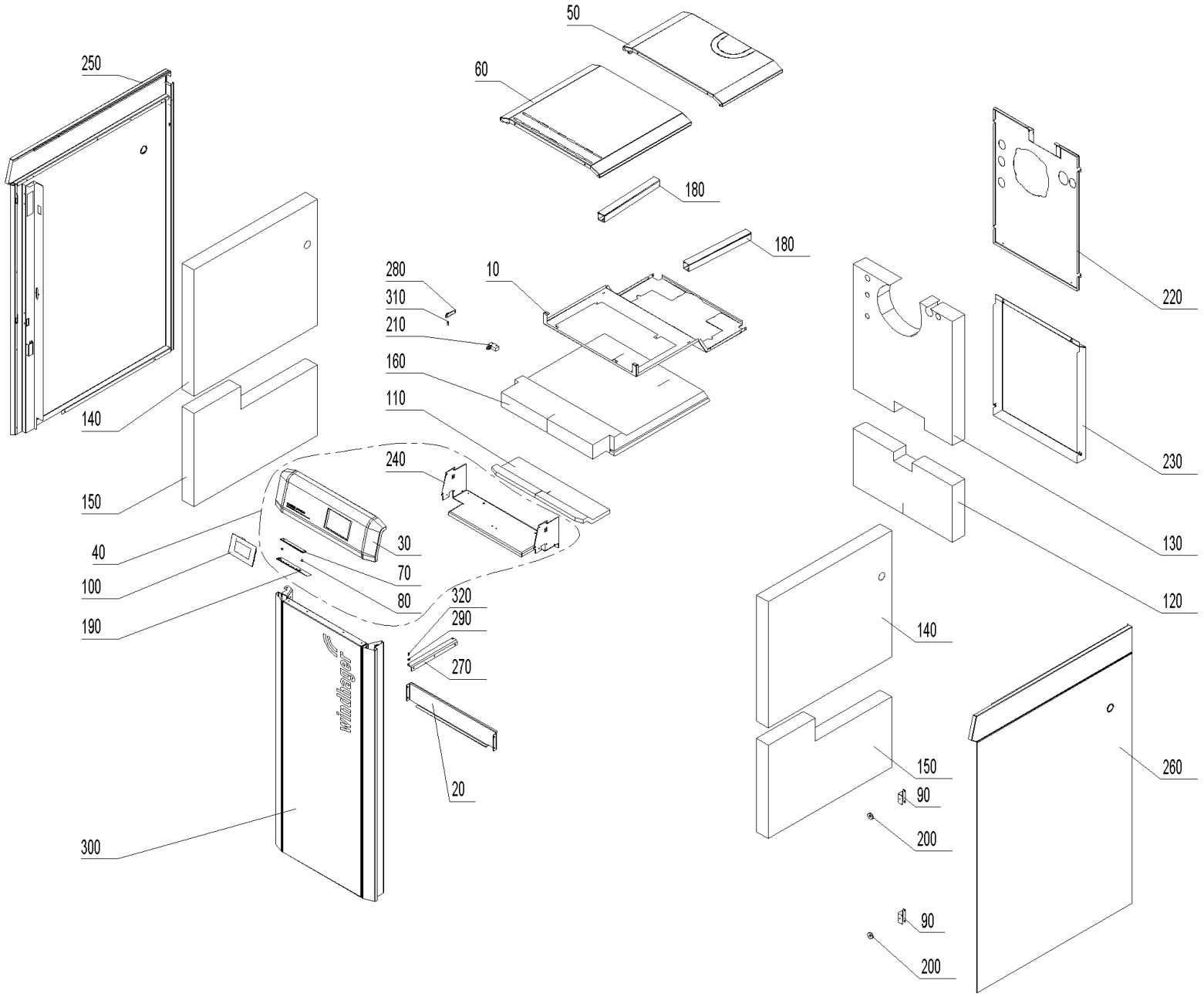

Cladding (A000139)

Item no.	Article no.	Description	Quantity	Unit
150	051222	Bottom left/right insulation	2.00	pcs
180	050837	Cable duct	2.00	pcs
10	054110	de: Abdeckblech Isolierung oben LWPT36-50	1.00	pcs
20	053766	de: Abdeckung Fühler LWPT 36-50	1.00	pcs
30	054138	de: Bedienfeld kpl. LWPT 36-50	1.00	pcs
50	054107	de: Deckel hinten LWPT 30-50	1.00	pcs
60	054106	de: Deckel vorne LWPT 30-50	1.00	pcs
70	007196	de: Diffuser LED-Streifen LWPT	1.00	pcs
80	009694	de: Distanzhülse Ø8xØ4,3x5,4	2.00	pcs
90	053753	de: Haltebügel Magnet LWPT 18-36	2.00	pcs
110	054184	de: Isolierung Bedienfeld LWPT 36-50	1.00	pcs
130	053988	de: Isolierung hinten oben LWPT 36-50	1.00	pcs
120	053986	de: Isolierung hinten unten LWPT 36-50	1.00	pcs
140	053989	de: Isolierung links/rechts oben LWPT 18-50	2.00	pcs
160	053987	de: Isolierung oben LWPT 36-50	1.00	pcs
170	009606	de: Kabel InfoWIN Touch auf LED-Streifen	1.00	pcs
190	012990	de: LED - Balken LWPT	1.00	pcs
200	001761	de: Magnet Ø31 gummiummantelt	2.00	pcs
220	053764	de: Rückwand oben LWPT 36-50	1.00	pcs
230	053765	de: Rückwand unten LWPT 36-50	1.00	pcs
240	053798	de: Schwelgasführung LWPT 30-50	1.00	pcs
250	054135	de: Seitenwand links LWPT 18-50	1.00	pcs

Cladding (A000139)

Item no.	Article no.	Description	Quantity	Unit
260	054136	de: Seitenwand rechts LWPT 18-50	1.00	pcs
270	051911	de: Türangel unten LWPT	1.00	pcs
280	051909	de: Türlager oben LWPT	1.00	pcs
300	054134	de: Verkleidungstür kpl. LWPT 36-50	1.00	pcs
320	033092	de: Zapfenschrauben M5X5	1.00	pcs
290	018309	Disc 5 DIN134	1.00	pcs
310	015507	Dog point screw	1.00	pcs
100	001009	INF8 MES INFINITY InfoWIN Touch	1.00	pcs
40	054152	LWP17 Bedienfeld zu LogWIN Premium 360-505T	1.00	pcs
210	007128	Microswitch Z-15GQ-B for LogWIN Premium 180-505, BioWIN XL 35-60	1.00	pcs

cleaning equipment (A000143)

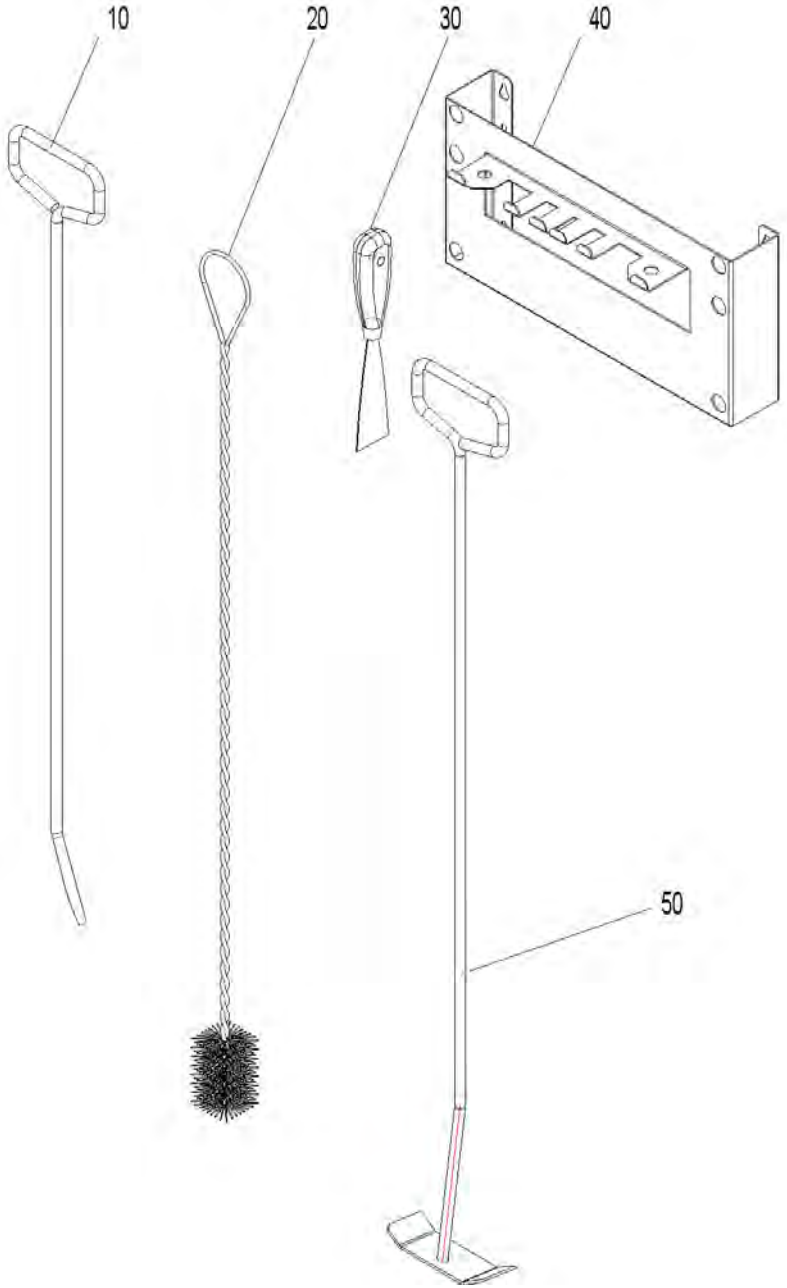

cleaning equipment (A000143)

Item no.	Article no.	Description	Quantity	Unit
50	040328	Cleaning rake for HMX,PMX, EasyWIN Klassik/Premium 180, LogWIN Premium 180-505	1.00	pcs
10	080664	FAX192 Poker for FAX,HMX,SilvaWIN,FKX,EasyWIN Klassik/Premium 180,LogWIN Premium 180-505	1.00	pcs
20	003088	GWX992 Cleaning brush 950x45mm/45x70 mm for GWX, LogWIN Premium 180-505, EasyWIN Klassik/Premium 180	1.00	pcs
40	042743	Holder for cleaning equipments for VarioWIN, LogWIN Premium 180-505,SilvaWIN,BioWIN XL35-60,EasWIN Klassik/Premium 180	1.00	pcs
30	009540	Spatula	1.00	pcs

combustion chamber (A000142)

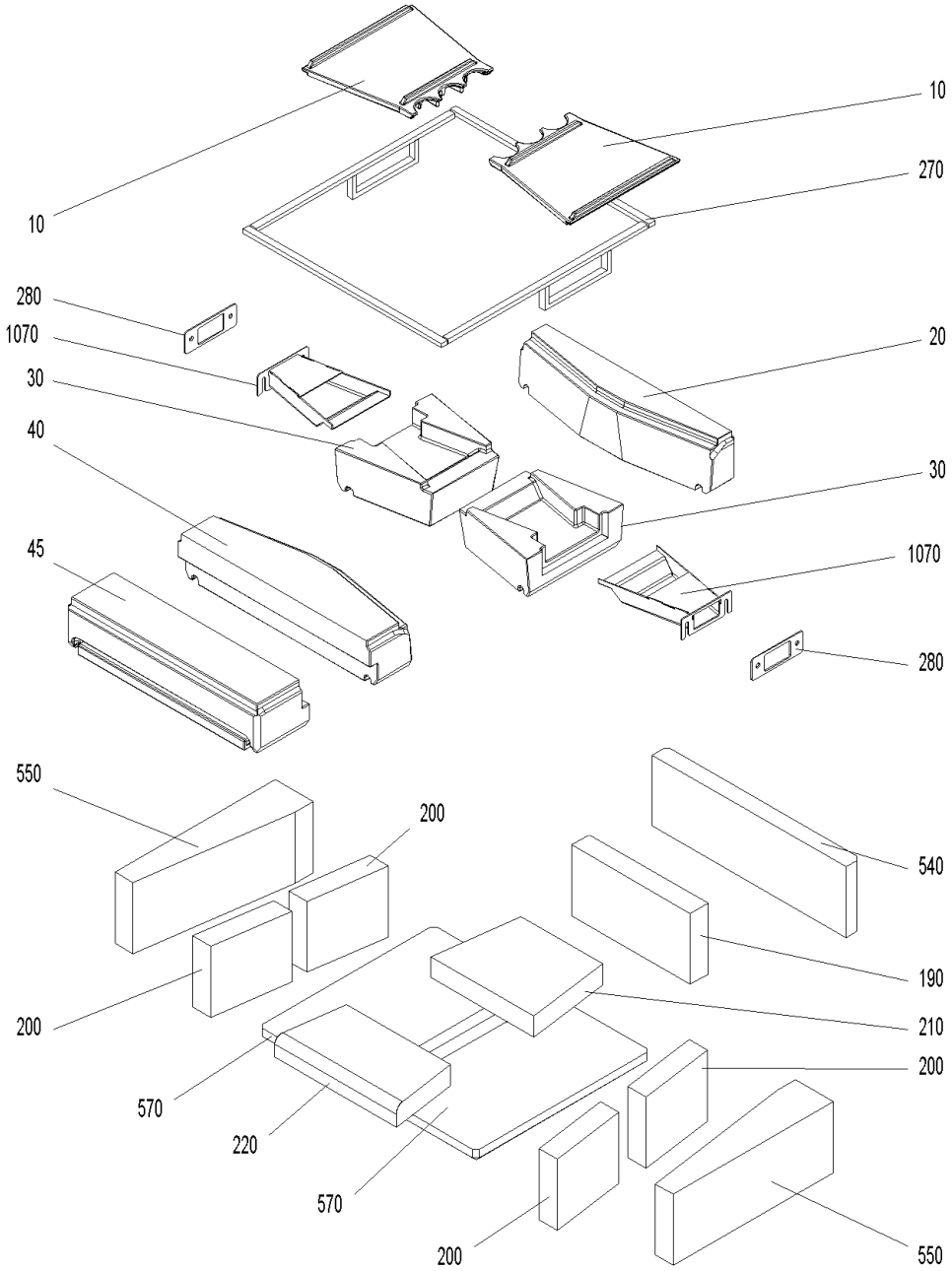

combustion chamber (A000142)

Item no.	Article no.	Description	Quantity	Unit
220	007409	Bottom front combustion chamber stone for LogWIN Premium 360-505	1.00	pcs
210	007408	Bottom rear combustion chamber stone for LogWIN Premium 360-505	1.00	pcs
10	007414	Burning plate for LogWIN Premium 360-505	1.00	pcs
30	007400	Burning stone left/right for LogWIN Premium 360-505	2.00	pcs
40	007399	Centre burning stone for LogWIN Premium 360-505	1.00	pcs
200	051233	Combustion chamber stone left/right LWK	4.00	pcs
570	051733	de: Isolierstein unten Material Vermiculite zu LWP	2.00	pcs
45	007398	Front burning stone for LogWIN Premium 360-505	1.00	pcs
550	051234	Insulating stone left/right LWK	2.00	pcs
20	007401	Rear burning stone for LogWIN Premium 360-505	1.00	pcs
190	007407	Rear combustion chamber stone for LogWIN Premium 360-505	1.00	pcs
540	007403	Rear insulating stone for LogWIN Premium 360-505	1.00	pcs
270	046120	Rope seal kit for burning stones for LogWIN Premium 360-505	1.00	pcs
280	007415	Seal for secondary air nozzle 142x52x3mm for LogWIN Premium 360-505	2.00	pcs
1070	045640	Secondary air nozzle complete for LogWIN Premium 360-505	2.00	pcs

Control panel (A000140)

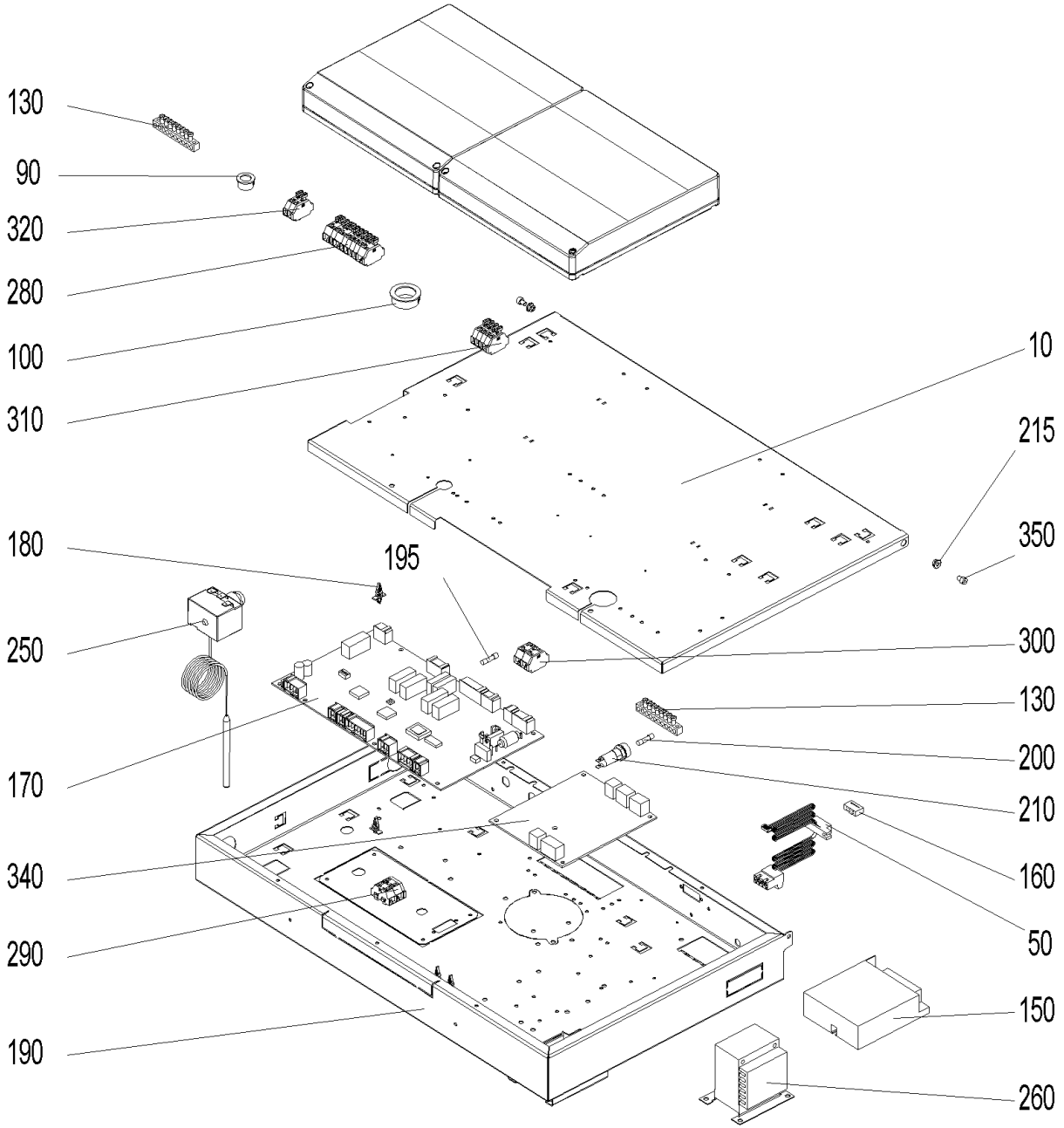

Control panel (A000140)

Item no.	Article no.	Description	Quantity	Unit
200	003228	6.3A fuse (not illustrated)	2.00	pcs
90	009542	Cable feed-through	1.00	pcs
10	053779	de: Deckel Schaltfeld BW2T, LWPT	1.00	pcs
20	054311	de: Flachbandkabel vorm. LWPT	1.00	pcs
30	054313	de: Fühlerset vorm. LWPT	1.00	pcs
50	009605	de: Kabel - LON LWPT, BWXL2, BW2, BW2T	1.00	pcs
100	009536	de: Kabeldurchführung 2160 schwarz Ø 28	1.00	pcs
120	054315	de: Kabelsatz 230V SB LWPT	1.00	pcs
190	052994	de: Schaltfeld Unterteil BW2T, LWPT	1.00	pcs
215	016564	de: Sperrzahnmutter M4 verzinkt	1.00	pcs
270	054314	de: Trafo O2-Sonde vorm. LWPT	1.00	pcs
310	006835	de: Wagoblock 261 5tlg."ext. Wärme" 1-4 PMX, BW2T, LWPT	1.00	pcs
330	009334	de: Zugentlastung 3 pol.f.Bu. Z7.419.2153.OSW	1.00	pcs
40	054155	de: Zuleitungskabel LWPT	1.00	pcs
350	016782	de: Zylinderschraube m. Innensechskant ISO 4762 - M 4 x 10 - 8.8 - verzinkt (DIN 912)	1.00	pcs
80	048419	Draught fan cable (not illustrated)	1.00	pcs
340	007095	Extra PCB for O2-mesure or pumping rotation speed control for BioWIN cascade, LogWIN Premium 180-505	1.00	pcs
170	011999	FMF PCB for LogWIN Premium 180-505	1.00	pcs
195	006900	Fuse 1 A T 5x20 ceramic tube	2.00	pcs
210	003663	Fuse holder	1.00	pcs
70	007165	Lambda sensor cable (not illustrated)	1.00	pcs
140	041430	Mains connection socket 3-pin for MIRA,ETX,PMX,BioWIN10-26,LogWIN Premium	1.00	pcs

Control panel (A000140)

Item no.	Article no.	Description	Quantity	Unit
		180-505,EasyWIN Premium 180,BioWIN XL 35-60, FireWIN		
230	502186	MES009M Immersion sensor	1.00	pcs
180	007609	PCB holder	12.00	pcs
160	005784	Pin connector (not illustrated)	1.00	pcs
220	009318	Plug ST18/3S sw wie for LogWIN Premium 180-505	1.00	pcs
60	002059	Power supply cable (not illustrated)	1.00	pcs
150	051645	Power supply unit 12V	1.00	pcs
130	009929	Terminal bar MS 8-pin 8x8mm for VarioWIN,FireWIN, BioWIN XL 35-60	2.00	pcs
240	007626	Thermocouple	1.00	pcs
250	005672	Thermostat LS1+100-6U	1.00	pcs
260	007096	Transformer for O2 sensor 18VA for LogWIN Premium 180-505	1.00	pcs
320	009948	Wago terminal block 261; 2-pin WMS 1-2, 3-piece for VarioWIN, FireWIN	1.00	pcs
290	006833	Wago terminal block 261; 4-pin "12V GND"	1.00	pcs
300	006834	Wago terminal block 261; 4-pin "safety 1-4"	1.00	pcs
280	009891	Wago terminal block 261; 11-pin safety 1-11 for FireWIN, VarioWIN	1.00	pcs

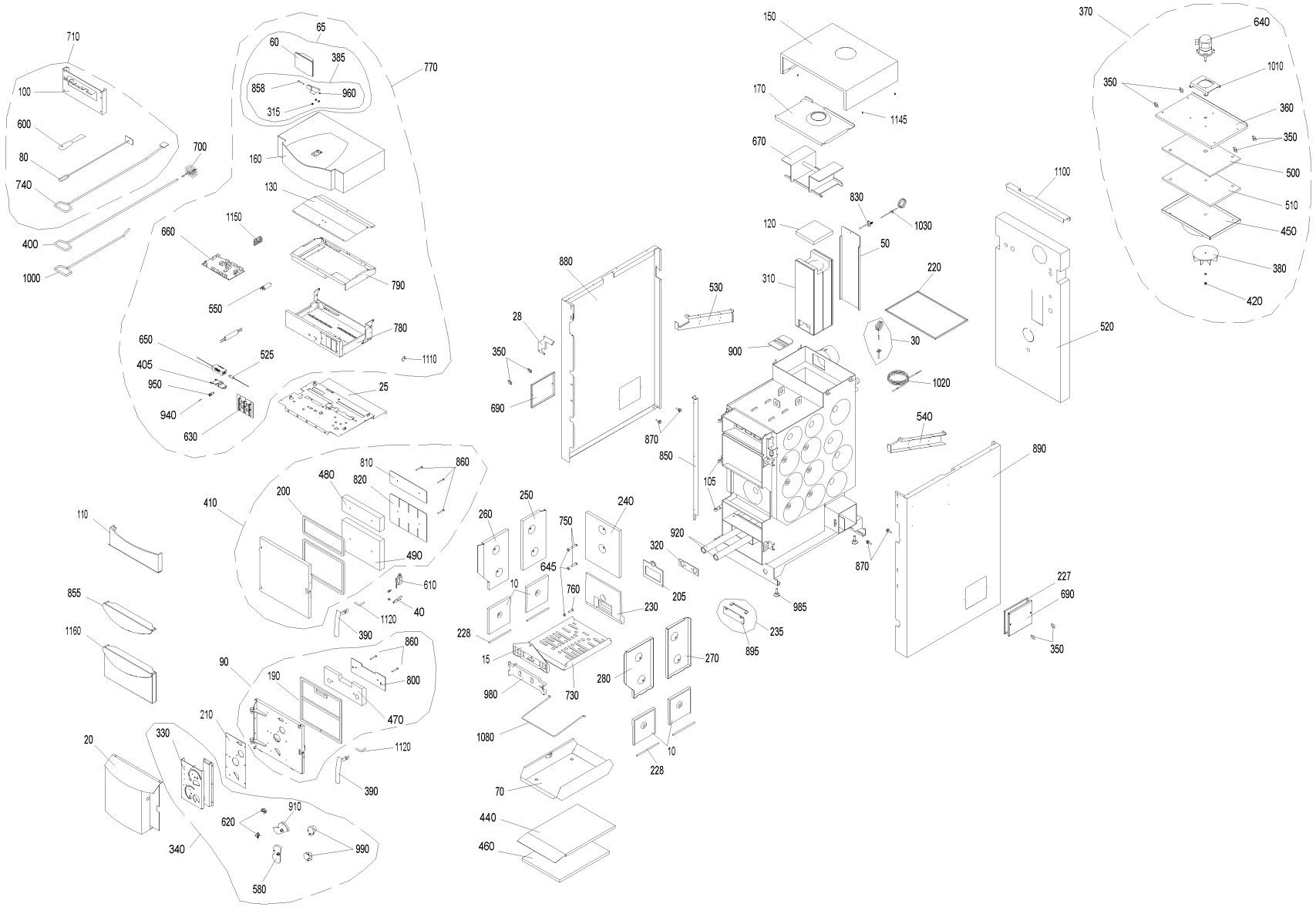
710
100
600
80
740
400
1000
700
65
60
385
858
960
315
770
160
130
1150
660
790
550
780
650
525
405
950
940
630
1110
25
880
28
350
690
530
870
850
105
150
170
1145
670
830
1030
120
50
310
220
30
900
1020
540
890
1100
520
370
640
1010
350
360
350
500
510
450
380
420
810
860
480
820
200
410
490
110
610
40
1120
390
855
1160
90
190
860
800
470
210
330
20
1120
390
910
620
990
340
580
250
260
750
240
645
10
760
230
228
15
980
730
1080
70
440
460
920
320
205
270
280
10
228
235
895
985
870
227
690
350

Item no.	Article no.	Description	Serialnumber from	Serialnumber t
10	045005	de: Abdeckplatte li./re.mit Dichtschnur Feuerungsraum SilvaWIN	0	9999999999999
15	007371	de: Abdeckplatte vorne SWK	0	9999999999999
20	044325	de: Abdeckung Luftklappen SilvaWIN Klassik beschichtet RAL7044 seidengrau	0	9999999999999
25	043793	de: Abdeckung oben unter Schaltfeld für SilvaWIN	0	9999999999999
28	045111	de: Abdeckung Tauchhülse Windhagerrot beschichtet.	0	9999999999999
30	504195	JW-010 Flue gas sensor set with protective pipe	0	9999999999999
40	044102	de: Anlüftsicherungshaken gelb verz. SilvaWIN	0	9999999999999
50	044352	de: Anpressplatte Brennkammer SilvaWIN	0	9999999999999
60	011985	InfoWINplus HW C4 SW V4.10 BioWIN, LWP, JetWIN, EcoWIN	0	9999999999999
65	047113	de: InfoWIN Umbauset rund auf neues Design für SilvaWIN-T bis Los24	0	9999999999999
70	043438	de: Aschelade grau lackiert für SilvaWIN	0	9999999999999
80	043948	de: Ascheschieber kpl.verzinkt	0	9999999999999
90	044330	de: Aschetür kpl. SilvaWINK	0	9999999999999
100	042743	Holder for cleaning equipments for VarioWIN, LogWIN Premium 180-505,SilvaWIN,BioWIN XL35-60,EasWIN Klassik/Premium 180	0	9999999999999
105	033433	Eyebolt similar to DIN 444 - B M12x50 - 4.6 - bright for VarioWIN, FireWIN,EasyWIN Klassik/Premium 180,LogWIN Premium 180-505	0	9999999999999
110	044380	de: Blende mit Schwelgasleitblech SilvaWIN	0	9999999999999
120	007359	de: Deckel Feuerungszylinder SWK	0	9999999999999
130	042998	Control panel cover for BioWIN 10-26, SilvaWIN, BioWIN XL 35-60	0	9999999999999
150	044382	de: Deckel hinten grau SilvaWIN	0	9999999999999
160	044535	de: Deckel vorne SilvaWIN	0	9999999999999
170	044344	de: Deckel Nachheizfläche SilvaWIN	0	9999999999999
180	044396	de: Deckelsicherung Feuerungszylinder SilvaWIN	0	9999999999999
190	044537	de: Dichtschnurset Aschetür SilvaWIN	0	9999999999999
200	044536	de: Dichtschnurset Heiztüre SilvaWIN	0	9999999999999
205	008051	de: Dichtung Durchbrandplatte 180x158x3mm KP SilvaWIN	0	9999999999999
210	007353	de: Dichtung Flansch Aschetür SilvaWIN	0	9999999999999
220	044542	de: U-Profildichtung Gebläsekasten SWK	0	9999999999999
221	003086	de: Dichtung FZ oben KP 176x168x3mm	0	9999999999999
222	007368	de: Dichtung unten 176x168x5mm Feuerungszylinder SilvaWIN	0	9999999999999
224	007356	de: Dichtung vorne 168x129x3mm KP Feuerungszylinder SilvaWIN	0	9999999999999
225	043782	de: Dichtung für Rost-Abdeckplatte SilvaWIN	0	9999999999999
226	007372	de: Dichtung FZ vo Mitte D35x3mm KP	0	9999999999999
227	007351	de: Dichtung (206x176x3) Reinigungsdeckel SWK	0	9999999999999
228	043782	de: Dichtung für Rost-Abdeckplatte SilvaWIN	0	9999999999999
230	044331	de: Durchbrandplatte mit Dichtung SilvaWIN	0	9999999999999
235	047133	de: Einbauset Sekundärluft-Anheizklappe für SilvaWIN bis Los24	0	9999999999999
240	044338	de: Einhängeblech hinten SilvaWIN	0	9999999999999
250	044337	de: Einhängeblech seitlich hinten links SilvaWIN	0	9999999999999
260	044333	de: Einhängeblech links SilvaWIN	0	9999999999999
270	044336	de: Einhängeblech seitlich hinten rechts SilvaWIN	0	9999999999999
280	044335	de: Einhängeblech rechts SilvaWIN	0	9999999999999
310	007427	de: Feuerungszylinder SilvaWIN ab Los20	0	9999999999999
310	046223	de: Feuerungszylinder kpl.mit Sekundärluftdüse SilvaWIN bis Los19	0	9999999999999
315	017001	Flanged nut M5 for BioWIN 10-26, BioWIN XL 35-60	0	9999999999999
320	044341	de: Flansch Sekundärluftrohr SilvaWIN	0	9999999999999
330	043776	de: Flansch Stellmotor für SWK-T	0	9999999999999
340	044353	de: Flansch Stellmotor kpl. ohne Kabelbaum SWK-T	0	9999999999999
350	007366	Wing nut M8	0	9999999999999
360	044346	de: Gebläsedeckel lackiert SilvaWIN	0	9999999999999
370	044347	de: Gebläsedeckel kpl.inkl.Motor und Gebläserad D170 SWK170/240T und SWK240M	0	9999999999999
380	043441	Blower wheel Ø170mm for HMX, SilvaWIN, LogWIN Premium 180-505	0	9999999999999

Item no.	Article no.	Description	Serialnumber from	Serialnumber t
385	046311	Housing foot InfoWIN cpl. with fastening material for LogWIN Premium 180-505,BioWIN 10-26,SWK-T,BioWIN XL 35-60	0	9999999999999
390	043916	Handle for filling and ash doors (RAL7021) for FKX,SilvaWIN, EasyWIN Klassik/Premium 180	0	9999999999999
400	040074	de: Griff Reinigungsbürste OKE/S 39-60,E/SKX 55,FAX ETX/SNX,SilvaWIN	0	9999999999999
405	002050	Power supply unit 002049 holding plate for VarioWIN, FireWIN, BioWIN 10-26, BioWIN XL 35-60, LogWIN Premium 180-505	0	9999999999999
410	044329	de: Heiztür kpl. SilvaWin	0	9999999999999
420	025967	Cap nut DIN 1587 - M8 - 6 - galvanised for FAX, FireWIN, VarioWIN, BioWIN 10-26, EasyWIN Klassik/Premium 180	0	9999999999999
430	047113	de: InfoWIN Umbauset rund auf neues Design für SilvaWIN-T bis Los24	0	9999999999999
440	043409	de: Isolierblech für Aschelade SilvaWIN	0	9999999999999
450	044345	de: Spiraldeckel kpl. SilvaWIN	0	9999999999999
460	007350	de: Isolierung 460x350x20 RAF Isolierblech Aschelade SilvaWIN	0	9999999999999
470	006803	de: Isolierstein Aschetür 348x135x40mm SN450 SilvaWIN	0	9999999999999
480	006802	de: Isolierstein Heiztür oben 348x109x40mm SN450 SilvaWIN	0	9999999999999
490	006801	de: Isolierstein Heiztür unten 348x235x40mm SN450 SilvaWIN	0	9999999999999
500	007361	de: Isolierung Gebläsedeckel oben 446x281x30 RP-V SilvaWIN	0	9999999999999
510	007360	de: Isolierung Gebläsedeckel unten 446x281x1/2" SilvaWIN	0	9999999999999
520	009239	de: Isolierung hinten 1193x600x80 (mit Trägerfolie) SilvaWIN	0	9999999999999
525	002051	Power supply unit cable FRIWO (primary power line) for VarioWIN, FireWIN, BioWIN 10-26, BioWIN XL 35-60, LogWIN Premium 180-505	0	9999999999999
530	043123	de: Kabelschacht links für SilvaWIN	0	9999999999999
540	043122	de: Kabelschacht rechts für SilvaWIN	0	9999999999999
550	007330	Condenser for motor MAB 500V, 3µF for HMX,PMX,SWK,BioWIN10-26,FireWIN,VarioWIN,BioWIN XL 35-60, EasyWIN Premium 180,LogWIN Premiu	0	9999999999999
570	043964	InfoWIN bracket for SilvaWIN,BioWIN	0	9999999999999
580	040032	Air choke	0	9999999999999
600	009540	Spatula	0	9999999999999
610	502007	FKX007 Door safety switch	0	9999999999999
620	009277	Air control microswitch	0	9999999999999
630	044824	de: Modulanschlußplatine SilvaWIN	0	9999999999999
640	044158	Blower motor with cable for blower for SilvaWIN, LogWIN, FireWIN, BioWIN XL 35-60, EasyWIN Premium 180, LogWIN Premium 180-505	0	9999999999999
645	031155	de: Mutter DIN 934 - M10 - A4	0	9999999999999
650	051645	Power supply unit 12V	0	9999999999999
660	007370	de: Platine FMF SilvaWIN	0	9999999999999
670	044343	de: Rauchgasumlenkung SilvaWIN	0	9999999999999
680	043447	de: Reinigungsbügel für Feuerungszylinder SWK	0	9999999999999
690	044383	de: Reinigungsdeckel rot mit Dichtung SilvaWIN	0	9999999999999
700	012009	de: Reinigungsbürste W.Nr.1.4301 (147x90x70/50mm), schraubbar (M6-IG)	0	9999999999999
705	045726	de: Reinigungsgerät Feuerungszylinder SilvaWIN bis Los19	0	9999999999999
710	502841	SWK030 Cleaning kit SWK consisting of:ash scarper,cleaning scarper,spatula,hanger	0	9999999999999
730	007373	de: Rost SilvaWIN - M/T	0	9999999999999
740	043946	de: Schaber kpl.verzinkt für SilvaWIN	0	9999999999999
750	044469	de: Schraube für Abdeckblech hinten inkl.U-Scheibe u.Mutter M10 SWK	0	9999999999999
760	044332	de: Schraube Durchbrandplatte inkl.U-Scheibe u.Mutter M10 SWK	0	9999999999999
770	043598	de: SWKT01 Schalterblende im Karton für SILVAWIN Klassik-T	0	9999999999999
780	044317	de: Schaltfeld Unterteil für SWK-T und BioWIN XL	0	9999999999999
790	043807	Control panel top part for BioWIN 10-26, SWK, BioWIN XL35-60	0	9999999999999
800	044538	de: Schutzblech Aschetür SilvaWIN	0	9999999999999
810	044540	de: Schutzblech oben Heiztüre SilvaWIN	0	9999999999999
820	044541	de: Schutzblech unten Heiztüre SilvaWIN	0	9999999999999
830	048299	de: Schutzrohr für Brennkammerfühler SilvaWIN	0	9999999999999
850	043784	de: Schutzwinkel für Kapillarrohr SilvaWIN	0	9999999999999
855	044389	de: Schwelgasleitblech schwarzgr.besch.(RAL7021) SilvaWIN Klassik	0	9999999999999
858	016214	Hexagon screw DIN931 M5 x 45, black for BioWIN XL 35-60	0	9999999999999
860	031259	Hexagon screw M6 x 55, DIN 933 for EasyWIN Klassik/Premium 180	0	9999999999999

Item no.	Article no.	Description	Serialnumber from	Serialnumber t
870	031550	de: Sechskantschraube DIN 931 - M8x35 - 8.8 - verzinkt LWK	0	9999999999999
880	044378	de: Seitenwand links rot besch. SilvaWIN	0	9999999999999
890	044379	de: Seitenwand rechts rot besch. SilvaWIN	0	9999999999999
895	047365	de: Sekundärluft - Anheizklappe zu SilvaWIN	0	9999999999999
900	044402	de: Sekundärluftdüse SilvaWIN bis Los19	0	9999999999999
900	046222	de: Sekundärluftdüse SilvaWIN ab Los20	0	9999999999999
910	044394	de: Sekundärluftklappe SilvaWIN	0	9999999999999
920	044340	de: Sekundärluftrohr SilvaWIN	0	9999999999999
940	003228	6.3A fuse (not illustrated)	0	9999999999999
950	003663	Fuse holder	0	9999999999999
960	016728	Locknut M 5, DIN 985, black for BioWIN 10-26, BioWIN XL 35-60	0	9999999999999
964	040159	de: Kabel (4x1mm² - Silikon) Synchronmotor-Endschalter HMX,SWK	0	9999999999999
966	040162	de: Kabel (7x1mm² - Silikon) Synchronmotor HMX,SWK	0	9999999999999
980	007437	de: Stehrost SilvaWIN	0	9999999999999
985	009994	Foot M12X40 JTB38 for HMX, EasyWIN Klassik/Premium 180, LogWIN Premium 180-505	0	9999999999999
990	040429	Servomotor for HMX, SilvaWIN, LogWIN Premium 180-505	0	9999999999999
1000	080664	FAX192 Poker for FAX,HMX,SilvaWIN,FKX,EasyWIN Klassik/Premium 180,LogWIN Premium 180-505	0	9999999999999
1010	040291	de: Strahlschutzblech Gebläse HMX, SilvaWIN	0	9999999999999
1020	502186	MES009M Immersion sensor	0	9999999999999
1030	007626	Thermocouple	0	9999999999999
1080	043411	de: Tragbügel für Aschelade SilvaWIN	0	9999999999999
1100	043106	de: Verbindungsbügel für Verkleidung SilvaWIN	0	9999999999999
1110	043808	Locking arm for control panel for BioWIN 10-26, BioWIN XL 35-60	0	9999999999999
1120	043426	Locking bracket for heating door / ash door for SilvaWIN,LogWIN Premium 180-505, BioWIN XL 35-60, EasyWIN Klassik/Premium 180	0	9999999999999
1145	033092	de: Zapfenschrauben DIN 927 5.8 M5X5 verz. (HMX, PMX)	0	9999999999999
1150	041914	Strain relief 4X, complete, assembled for ETX/SNX,PSX,GENIO/MultiWIN, SilvaWIN, BioWIN XL, BioWIN10-26, BioWIN XL 35-60	0	9999999999999
1160	044381	de: Zwischenblende mit Schwelgasleitblech SilvaWIN	0	9999999999999

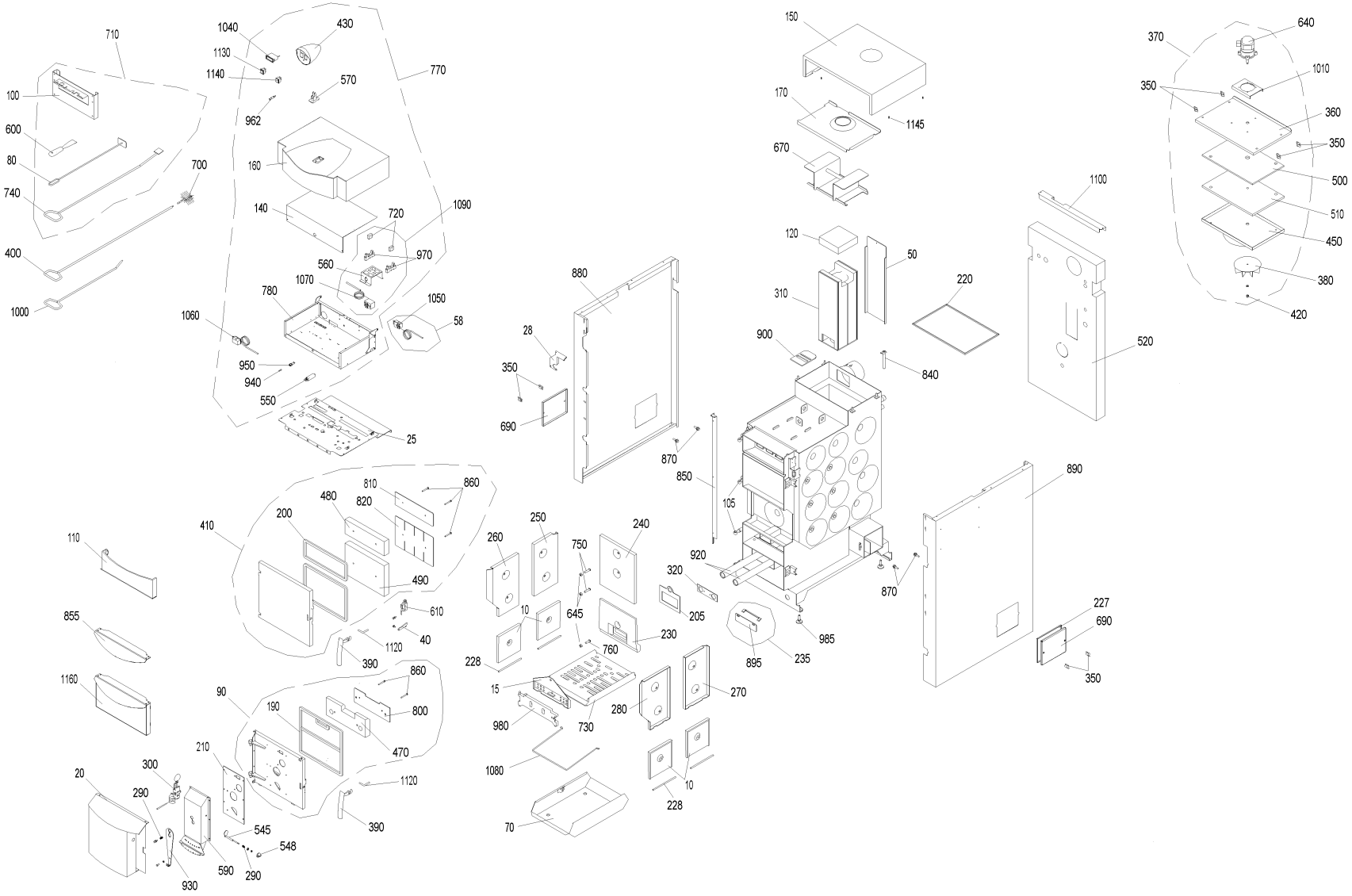
710
100
600
80
740
400
1000
700
1040
1130
1140
962
430
570
770
160
140
720
1090
970
560
1070
780
1050
58
1060
950
940
550
25
150
170
1145
670
120
50
310
220
900
840
1100
520
370
640
1010
350
360
350
500
510
450
380
420
880
28
350
690
870
850
105
890
810
860
480
820
200
410
110
490
610
40
1120
390
855
1160
90
190
860
800
470
210
300
20
290
1120
390
545
548
590
290
930
260
250
750
240
645
10
230
760
228
15
980
730
280
270
1080
10
228
70
920
320
205
895
235
985
870
227
690
350

Item no.	Article no.	Description	Serialnumber from	Serialnumber t
10	045005	de: Abdeckplatte li./re.mit Dichtschnur Feuerungsraum SilvaWIN	0	9999999999999
15	007371	de: Abdeckplatte vorne SWK	0	9999999999999
20	044325	de: Abdeckung Luftklappen SilvaWIN Klassik beschichtet RAL7044 seidengrau	0	9999999999999
25	043793	de: Abdeckung oben unter Schaltfeld für SilvaWIN	0	9999999999999
28	045111	de: Abdeckung Tauchhülse Windhagerrot beschichtet.	0	9999999999999
40	044102	de: Anlüftsicherungshaken gelb verz. SilvaWIN	0	9999999999999
50	044352	de: Anpressplatte Brennkammer SilvaWIN	0	9999999999999
58	502840	SWK010 Minimum temperature control for heating pumps; necessary without MES!	0	9999999999999
70	043438	de: Aschelade grau lackiert für SilvaWIN	0	9999999999999
80	043948	de: Ascheschieber kpl.verzinkt	0	9999999999999
90	044330	de: Aschetür kpl. SilvaWINK	0	9999999999999
100	042743	Holder for cleaning equipments for VarioWIN, LogWIN Premium 180-505,SilvaWIN,BioWIN XL35-60,EasWIN Klassik/Premium 180	0	9999999999999
105	033433	Eyebolt similar to DIN 444 - B M12x50 - 4.6 - bright for VarioWIN, FireWIN,EasyWIN Klassik/Premium 180,LogWIN Premium 180-505	0	9999999999999
110	044380	de: Blende mit Schwelgasleitblech SilvaWIN	0	9999999999999
120	007359	de: Deckel Feuerungszylinder SWK	0	9999999999999
140	044391	de: Deckel Schaltfeld SWK-M	0	9999999999999
150	044382	de: Deckel hinten grau SilvaWIN	0	9999999999999
160	044535	de: Deckel vorne SilvaWIN	0	9999999999999
170	044344	de: Deckel Nachheizfläche SilvaWIN	0	9999999999999
180	044396	de: Deckelsicherung Feuerungszylinder SilvaWIN	0	9999999999999
190	044537	de: Dichtschnurset Aschetür SilvaWIN	0	9999999999999
200	044536	de: Dichtschnurset Heiztüre SilvaWIN	0	9999999999999
205	008051	de: Dichtung Durchbrandplatte 180x158x3mm KP SilvaWIN	0	9999999999999
210	007353	de: Dichtung Flansch Aschetür SilvaWIN	0	9999999999999
220	044542	de: U-Profildichtung Gebläsekasten SWK	0	9999999999999
221	003086	de: Dichtung FZ oben KP 176x168x3mm	0	9999999999999
222	007368	de: Dichtung unten 176x168x5mm Feuerungszylinder SilvaWIN	0	9999999999999
224	007356	de: Dichtung vorne 168x129x3mm KP Feuerungszylinder SilvaWIN	0	9999999999999
225	043782	de: Dichtung für Rost-Abdeckplatte SilvaWIN	0	9999999999999
226	007372	de: Dichtung FZ vo Mitte D35x3mm KP	0	9999999999999
227	007351	de: Dichtung (206x176x3) Reinigungsdeckel SWK	0	9999999999999
228	043782	de: Dichtung für Rost-Abdeckplatte SilvaWIN	0	9999999999999
230	044331	de: Durchbrandplatte mit Dichtung SilvaWIN	0	9999999999999
235	047133	de: Einbauset Sekundärluft-Anheizklappe für SilvaWIN bis Los24	0	9999999999999
240	044338	de: Einhängeblech hinten SilvaWIN	0	9999999999999
250	044337	de: Einhängeblech seitlich hinten links SilvaWIN	0	9999999999999
260	044333	de: Einhängeblech links SilvaWIN	0	9999999999999
270	044336	de: Einhängeblech seitlich hinten rechts SilvaWIN	0	9999999999999
280	044335	de: Einhängeblech rechts SilvaWIN	0	9999999999999
290	004073	Throttle flap spring for VestoWIN Klassik 170-220, VestoWIN Premium 200-202	0	9999999999999
300	044403	de: Feuerungsregler kpl. SilvaWIN	0	9999999999999
310	007427	de: Feuerungszylinder SilvaWIN ab Los20	0	9999999999999
310	046223	de: Feuerungszylinder kpl.mit Sekundärluftdüse SilvaWIN bis Los19	0	9999999999999
320	044341	de: Flansch Sekundärluftrohr SilvaWIN	0	9999999999999
350	007366	Wing nut M8	0	9999999999999
360	044346	de: Gebläsedeckel lackiert SilvaWIN	0	9999999999999
370	044347	de: Gebläsedeckel kpl.inkl.Motor und Gebläserad D170 SWK170/240T und SWK240M	0	9999999999999
380	043441	Blower wheel Ø170mm for HMX, SilvaWIN, LogWIN Premium 180-505	0	9999999999999
390	043916	Handle for filling and ash doors (RAL7021) for FKX,SilvaWIN, EasyWIN Klassik/Premium 180	0	9999999999999
400	040074	de: Griff Reinigungsbürste OKE/S 39-60,E/SKX 55,FAX ETX/SNX,SilvaWIN	0	9999999999999
410	044329	de: Heiztür kpl. SilvaWin	0	9999999999999

Item no.	Article no.	Description	Serialnumber from	Serialnumber t
420	025967	Cap nut DIN 1587 - M8 - 6 - galvanised for FAX, FireWIN, VarioWIN, BioWIN 10-26, EasyWIN Klassik/Premium 180	0	9999999999999
430	044409	de: InfoWIN-Gehäuse mit Schalterblech und Schild für SilvaWIN	0	9999999999999
450	044345	de: Spiraldeckel kpl. SilvaWIN	0	9999999999999
470	006803	de: Isolierstein Aschetür 348x135x40mm SN450 SilvaWIN	0	9999999999999
480	006802	de: Isolierstein Heiztür oben 348x109x40mm SN450 SilvaWIN	0	9999999999999
490	006801	de: Isolierstein Heiztür unten 348x235x40mm SN450 SilvaWIN	0	9999999999999
500	007361	de: Isolierung Gebläsedeckel oben 446x281x30 RP-V SilvaWIN	0	9999999999999
510	007360	de: Isolierung Gebläsedeckel unten 446x281x1/2" SilvaWIN	0	9999999999999
520	009239	de: Isolierung hinten 1193x600x80 (mit Trägerfolie) SilvaWIN	0	9999999999999
545	044643	de: Primärluftklappe oben kpl. SWK-M	0	9999999999999
548	012041	Knob PO 395	0	9999999999999
550	007330	Condenser for motor MAB 500V, 3µF for HMX,PMX,SWK,BioWIN10-26,FireWIN,VarioWIN,BioWIN XL 35-60, EasyWIN Premium 180,LogWIN Premiu	0	9999999999999
560	043911	de: Konsole für E-Kasten zu SilvaWIN	0	9999999999999
570	043964	InfoWIN bracket for SilvaWIN,BioWIN	0	9999999999999
590	044134	de: Luftschacht kpl.SWK-M	0	9999999999999
600	009540	Spatula	0	9999999999999
610	044941	de: Türsicherheitsschalter f.SWK-M vm.f Kessel SWK24 M	0	9999999999999
640	044158	Blower motor with cable for blower for SilvaWIN, LogWIN, FireWIN, BioWIN XL 35-60, EasyWIN Premium 180, LogWIN Premium 180-505	0	9999999999999
645	031155	de: Mutter DIN 934 - M10 - A4	0	9999999999999
670	044343	de: Rauchgasumlenkung SilvaWIN	0	9999999999999
680	043447	de: Reinigungsbügel für Feuerungszylinder SWK	0	9999999999999
690	044383	de: Reinigungsdeckel rot mit Dichtung SilvaWIN	0	9999999999999
700	012009	de: Reinigungsbürste W.Nr.1.4301 (147x90x70/50mm), schraubbar (M6-IG)	0	9999999999999
705	045726	de: Reinigungsgerät Feuerungszylinder SilvaWIN bis Los19	0	9999999999999
710	502841	SWK030 Cleaning kit SWK consisting of:ash scarper,cleaning scarper,spatula,hanger	0	9999999999999
720	005365	GTX828 Relay G2R-2 for ETX,SNX,EasyWIN Premium 180	0	9999999999999
730	007373	de: Rost SilvaWIN - M/T	0	9999999999999
740	043946	de: Schaber kpl.verzinkt für SilvaWIN	0	9999999999999
750	044469	de: Schraube für Abdeckblech hinten inkl.U-Scheibe u.Mutter M10 SWK	0	9999999999999
760	044332	de: Schraube Durchbrandplatte inkl.U-Scheibe u.Mutter M10 SWK	0	9999999999999
770	043599	de: SWKM01 Schalterblende Grundvariante im Karton für SilvaWIN Klassik M	0	9999999999999
780	044390	de: Schaltfeld beschichtet SilvaWIN	0	9999999999999
800	044538	de: Schutzblech Aschetür SilvaWIN	0	9999999999999
810	044540	de: Schutzblech oben Heiztüre SilvaWIN	0	9999999999999
820	044541	de: Schutzblech unten Heiztüre SilvaWIN	0	9999999999999
840	043952	Protective tube for flue gas thermostat for SilvaWIN, EasyWIN Premium 180	0	9999999999999
850	043784	de: Schutzwinkel für Kapillarrohr SilvaWIN	0	9999999999999
855	044389	de: Schwelgasleitblech schwarzgr.besch.(RAL7021) SilvaWIN Klassik	0	9999999999999
860	031259	Hexagon screw M6 x 55, DIN 933 for EasyWIN Klassik/Premium 180	0	9999999999999
870	031550	de: Sechskantschraube DIN 931 - M8x35 - 8.8 - verzinkt LWK	0	9999999999999
880	044378	de: Seitenwand links rot besch. SilvaWIN	0	9999999999999
890	044379	de: Seitenwand rechts rot besch. SilvaWIN	0	9999999999999
895	047365	de: Sekundärluft - Anheizklappe zu SilvaWIN	0	9999999999999
900	044402	de: Sekundärluftdüse SilvaWIN bis Los19	0	9999999999999
900	046222	de: Sekundärluftdüse SilvaWIN ab Los20	0	9999999999999
920	044340	de: Sekundärluftrohr SilvaWIN	0	9999999999999
930	043917	de: Sekundärluftschieber für Silvawin	0	9999999999999
940	003228	6.3A fuse (not illustrated)	0	9999999999999
950	003663	Fuse holder	0	9999999999999
962	005620	EKX925 Red signal lamp 220V 6.3A for FAX,GKX,E/SKX,GSX,ETX,SNX,SilvaWIN,EasyWIN Premium 180	0	9999999999999
970	009908	Base for relay for shut-off unit (* not illustrated) for EasyWIN Premium 180	0	9999999999999

Item no.	Article no.	Description	Serialnumber from	Serialnumber t
980	007437	de: Stehrost SilvaWIN	0	9999999999999
985	009994	Foot M12X40 JTB38 for HMX, EasyWIN Klassik/Premium 180, LogWIN Premium 180-505	0	9999999999999
1000	080664	FAX192 Poker for FAX,HMX,SilvaWIN,FKX,EasyWIN Klassik/Premium 180,LogWIN Premium 180-505	0	9999999999999
1010	040291	de: Strahlschutzblech Gebläse HMX, SilvaWIN	0	9999999999999
1040	012025	OKE027 Thermometer TF 00-058 KHS for NBS/L,E/SKX,GWX,FAX,GKX,NBR/K,OKE/S,OEN,FKL,GKE/W,SBZ,EasyWIN Klassik/Premium 180	0	9999999999999
1050	003039	de: Thermostat 716 FU, 60°C SilvaWIN	0	9999999999999
1060	003040	Thermostat 716FU 87°C for SilvaWIN, EasyWIN Premium 180	0	9999999999999
1070	003041	Flue gas thermostat EMFf-23 110/80°C for SilvaWIN, EasyWIN Premium 180	0	9999999999999
1080	043411	de: Tragbügel für Aschelade SilvaWIN	0	9999999999999
1090	044410	de: Umbausatz auf Komfortpaket für SilvaWIN Klassik M (Umbau ist nur durch geschultes Personal möglich!)	0	9999999999999
1100	043106	de: Verbindungsbügel für Verkleidung SilvaWIN	0	9999999999999
1120	043426	Locking bracket for heating door / ash door for SilvaWIN,LogWIN Premium 180-505, BioWIN XL 35-60, EasyWIN Klassik/Premium 180	0	9999999999999
1130	005638	ASL010 Rocker switch blk./gr. 0-1 82.06.11.63.65 for OKE/S,FKV,ASL/N,GKW,NBS/L,E/SKX,GWX,FAX,GKX,GMX,SilvaWIN,fittings cabinet Ve	0	9999999999999
1140	000711	de: Wipptaster 82.W.6.08.20.87 2-polig Wechsel schwarz/schwarz FAX,GWX,GKE,SilvaWIN	0	9999999999999
1145	033092	de: Zapfenschrauben DIN 927 5.8 M5X5 verz. (HMX, PMX)	0	9999999999999
1160	044381	de: Zwischenblende mit Schwelgasleitblech SilvaWIN	0	9999999999999

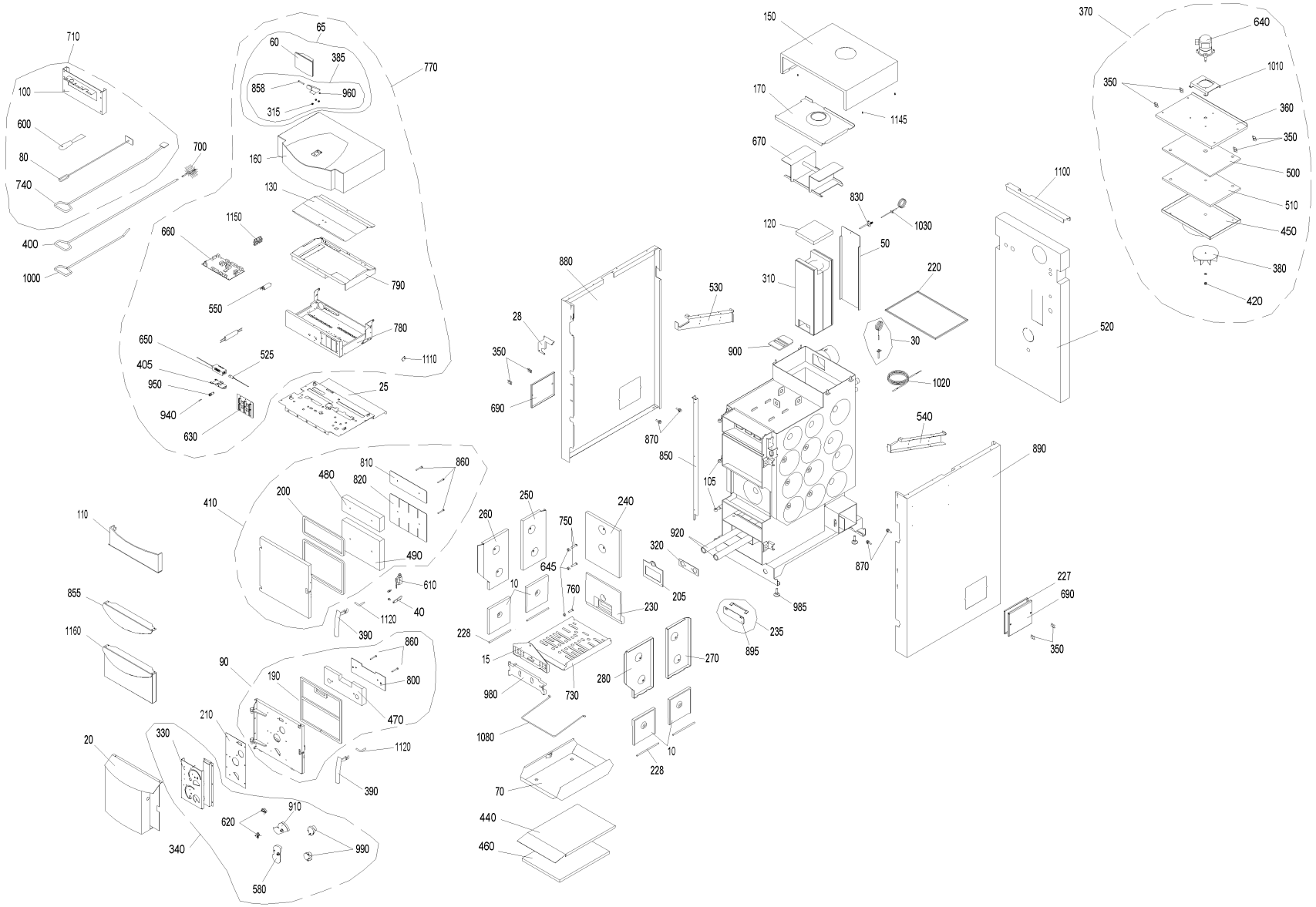
710
100
600
80
740
400
1000
700
65
60
385
858
960
315
770
160
130
1150
660
790
550
780
650
525
405
950
940
630
1110
25
150
170
1145
670
830
1030
120
50
310
220
30
1020
1100
520
370
640
1010
350
360
350
500
510
450
380
420
880
530
28
350
690
900
870
850
105
540
890
810
860
480
820
200
410
110
490
610
40
1120
390
855
1160
90
190
860
800
470
210
330
20
1120
390
910
620
990
340
580
250
260
750
240
645
10
760
230
205
320
920
870
985
235
895
227
690
350
228
15
980
730
280
270
1080
10
228
70
440
460

Item no.	Article no.	Description	Serialnumber from	Serialnumber t
10	045005	de: Abdeckplatte li./re.mit Dichtschnur Feuerungsraum SilvaWIN	0	9999999999999
15	007371	de: Abdeckplatte vorne SWK	0	9999999999999
20	044325	de: Abdeckung Luftklappen SilvaWIN Klassik beschichtet RAL7044 seidengrau	0	9999999999999
25	043793	de: Abdeckung oben unter Schaltfeld für SilvaWIN	0	9999999999999
28	045111	de: Abdeckung Tauchhülse Windhagerrot beschichtet.	0	9999999999999
30	504195	JW-010 Flue gas sensor set with protective pipe	0	9999999999999
40	044102	de: Anlüftsicherungshaken gelb verz. SilvaWIN	0	9999999999999
50	044352	de: Anpressplatte Brennkammer SilvaWIN	0	9999999999999
60	011985	InfoWINplus HW C4 SW V4.10 BioWIN, LWP, JetWIN, EcoWIN	0	9999999999999
65	047113	de: InfoWIN Umbauset rund auf neues Design für SilvaWIN-T bis Los24	0	9999999999999
70	043438	de: Aschelade grau lackiert für SilvaWIN	0	9999999999999
80	043948	de: Ascheschieber kpl.verzinkt	0	9999999999999
90	044330	de: Aschetür kpl. SilvaWINK	0	9999999999999
100	042743	Holder for cleaning equipments for VarioWIN, LogWIN Premium 180-505,SilvaWIN,BioWIN XL35-60,EasWIN Klassik/Premium 180	0	9999999999999
105	033433	Eyebolt similar to DIN 444 - B M12x50 - 4.6 - bright for VarioWIN, FireWIN,EasyWIN Klassik/Premium 180,LogWIN Premium 180-505	0	9999999999999
110	044380	de: Blende mit Schwelgasleitblech SilvaWIN	0	9999999999999
120	007359	de: Deckel Feuerungszylinder SWK	0	9999999999999
130	042998	Control panel cover for BioWIN 10-26, SilvaWIN, BioWIN XL 35-60	0	9999999999999
150	044382	de: Deckel hinten grau SilvaWIN	0	9999999999999
160	044535	de: Deckel vorne SilvaWIN	0	9999999999999
170	044344	de: Deckel Nachheizfläche SilvaWIN	0	9999999999999
180	044396	de: Deckelsicherung Feuerungszylinder SilvaWIN	0	9999999999999
190	044537	de: Dichtschnurset Aschetür SilvaWIN	0	9999999999999
200	044536	de: Dichtschnurset Heiztüre SilvaWIN	0	9999999999999
205	008051	de: Dichtung Durchbrandplatte 180x158x3mm KP SilvaWIN	0	9999999999999
210	007353	de: Dichtung Flansch Aschetür SilvaWIN	0	9999999999999
220	044542	de: U-Profildichtung Gebläsekasten SWK	0	9999999999999
221	003086	de: Dichtung FZ oben KP 176x168x3mm	0	9999999999999
222	007368	de: Dichtung unten 176x168x5mm Feuerungszylinder SilvaWIN	0	9999999999999
224	007356	de: Dichtung vorne 168x129x3mm KP Feuerungszylinder SilvaWIN	0	9999999999999
225	043782	de: Dichtung für Rost-Abdeckplatte SilvaWIN	0	9999999999999
226	007372	de: Dichtung FZ vo Mitte D35x3mm KP	0	9999999999999
227	007351	de: Dichtung (206x176x3) Reinigungsdeckel SWK	0	9999999999999
228	043782	de: Dichtung für Rost-Abdeckplatte SilvaWIN	0	9999999999999
230	044331	de: Durchbrandplatte mit Dichtung SilvaWIN	0	9999999999999
235	047133	de: Einbauset Sekundärluft-Anheizklappe für SilvaWIN bis Los24	0	9999999999999
240	044338	de: Einhängeblech hinten SilvaWIN	0	9999999999999
250	044337	de: Einhängeblech seitlich hinten links SilvaWIN	0	9999999999999
260	044333	de: Einhängeblech links SilvaWIN	0	9999999999999
270	044336	de: Einhängeblech seitlich hinten rechts SilvaWIN	0	9999999999999
280	044335	de: Einhängeblech rechts SilvaWIN	0	9999999999999
310	007427	de: Feuerungszylinder SilvaWIN ab Los20	0	9999999999999
310	046223	de: Feuerungszylinder kpl.mit Sekundärluftdüse SilvaWIN bis Los19	0	9999999999999
315	017001	Flanged nut M5 for BioWIN 10-26, BioWIN XL 35-60	0	9999999999999
320	044341	de: Flansch Sekundärluftrohr SilvaWIN	0	9999999999999
330	043776	de: Flansch Stellmotor für SWK-T	0	9999999999999
340	044353	de: Flansch Stellmotor kpl. ohne Kabelbaum SWK-T	0	9999999999999
350	007366	Wing nut M8	0	9999999999999
360	044346	de: Gebläsedeckel lackiert SilvaWIN	0	9999999999999
370	044347	de: Gebläsedeckel kpl.inkl.Motor und Gebläserad D170 SWK170/240T und SWK240M	0	9999999999999
380	043441	Blower wheel Ø170mm for HMX, SilvaWIN, LogWIN Premium 180-505	0	9999999999999

Item no.	Article no.	Description	Serialnumber from	Serialnumber
385	046311	Housing foot InfoWIN cpl. with fastening material for LogWIN Premium 180-505,BioWIN 10-26,SWK-T,BioWIN XL 35-60	0	9999999999999
390	043916	Handle for filling and ash doors (RAL7021) for FKX,SilvaWIN, EasyWIN Klassik/Premium 180	0	9999999999999
400	040074	de: Griff Reinigungsbürste OKE/S 39-60,E/SKX 55,FAX ETX/SNX,SilvaWIN	0	9999999999999
405	002050	Power supply unit 002049 holding plate for VarioWIN, FireWIN, BioWIN 10-26, BioWIN XL 35-60, LogWIN Premium 180-505	0	9999999999999
410	044329	de: Heiztür kpl. SilvaWin	0	9999999999999
420	025967	Cap nut DIN 1587 - M8 - 6 - galvanised for FAX, FireWIN, VarioWIN, BioWIN 10-26, EasyWIN Klassik/Premium 180	0	9999999999999
430	047113	de: InfoWIN Umbauset rund auf neues Design für SilvaWIN-T bis Los24	0	9999999999999
440	043409	de: Isolierblech für Aschelade SilvaWIN	0	9999999999999
450	044345	de: Spiraldeckel kpl. SilvaWIN	0	9999999999999
460	007350	de: Isolierung 460x350x20 RAF Isolierblech Aschelade SilvaWIN	0	9999999999999
470	006803	de: Isolierstein Aschetür 348x135x40mm SN450 SilvaWIN	0	9999999999999
480	006802	de: Isolierstein Heiztür oben 348x109x40mm SN450 SilvaWIN	0	9999999999999
490	006801	de: Isolierstein Heiztür unten 348x235x40mm SN450 SilvaWIN	0	9999999999999
500	007361	de: Isolierung Gebläsedeckel oben 446x281x30 RP-V SilvaWIN	0	9999999999999
510	007360	de: Isolierung Gebläsedeckel unten 446x281x1/2" SilvaWIN	0	9999999999999
520	009239	de: Isolierung hinten 1193x600x80 (mit Trägerfolie) SilvaWIN	0	9999999999999
525	002051	Power supply unit cable FRIWO (primary power line) for VarioWIN, FireWIN, BioWIN 10-26, BioWIN XL 35-60, LogWIN Premium 180-505	0	9999999999999
530	043123	de: Kabelschacht links für SilvaWIN	0	9999999999999
540	043122	de: Kabelschacht rechts für SilvaWIN	0	9999999999999
550	007330	Condenser for motor MAB 500V, 3µF for HMX,PMX,SWK,BioWIN10-26,FireWIN,VarioWIN,BioWIN XL 35-60, EasyWIN Premium 180,LogWIN Premiu	0	9999999999999
570	043964	InfoWIN bracket for SilvaWIN,BioWIN	0	9999999999999
580	040032	Air choke	0	9999999999999
600	009540	Spatula	0	9999999999999
610	502007	FKX007 Door safety switch	0	9999999999999
620	009277	Air control microswitch	0	9999999999999
630	044824	de: Modulanschlußplatine SilvaWIN	0	9999999999999
640	044158	Blower motor with cable for blower for SilvaWIN, LogWIN, FireWIN, BioWIN XL 35-60, EasyWIN Premium 180, LogWIN Premium 180-505	0	9999999999999
645	031155	de: Mutter DIN 934 - M10 - A4	0	9999999999999
650	051645	Power supply unit 12V	0	9999999999999
660	007370	de: Platine FMF SilvaWIN	0	9999999999999
670	044343	de: Rauchgasumlenkung SilvaWIN	0	9999999999999
680	043447	de: Reinigungsbügel für Feuerungszylinder SWK	0	9999999999999
690	044383	de: Reinigungsdeckel rot mit Dichtung SilvaWIN	0	9999999999999
700	012009	de: Reinigungsbürste W.Nr.1.4301 (147x90x70/50mm), schraubbar (M6-IG)	0	9999999999999
705	045726	de: Reinigungsgerät Feuerungszylinder SilvaWIN bis Los19	0	9999999999999
710	502841	SWK030 Cleaning kit SWK consisting of:ash scarper,cleaning scarper,spatula,hanger	0	9999999999999
730	007373	de: Rost SilvaWIN - M/T	0	9999999999999
740	043946	de: Schaber kpl.verzinkt für SilvaWIN	0	9999999999999
750	044469	de: Schraube für Abdeckblech hinten inkl.U-Scheibe u.Mutter M10 SWK	0	9999999999999
760	044332	de: Schraube Durchbrandplatte inkl.U-Scheibe u.Mutter M10 SWK	0	9999999999999
770	043598	de: SWKT01 Schalterblende im Karton für SILVAWIN Klassik-T	0	9999999999999
780	044317	de: Schaltfeld Unterteil für SWK-T und BioWIN XL	0	9999999999999
790	043807	Control panel top part for BioWIN 10-26, SWK, BioWIN XL35-60	0	9999999999999
800	044538	de: Schutzblech Aschetür SilvaWIN	0	9999999999999
810	044540	de: Schutzblech oben Heiztüre SilvaWIN	0	9999999999999
820	044541	de: Schutzblech unten Heiztüre SilvaWIN	0	9999999999999
830	048299	de: Schutzrohr für Brennkammerfühler SilvaWIN	0	9999999999999
850	043784	de: Schutzwinkel für Kapillarrohr SilvaWIN	0	9999999999999
855	044389	de: Schwelgasleitblech schwarzgr.besch.(RAL7021) SilvaWIN Klassik	0	9999999999999
858	016214	Hexagon screw DIN931 M5 x 45, black for BioWIN XL 35-60	0	9999999999999
860	031259	Hexagon screw M6 x 55, DIN 933 for EasyWIN Klassik/Premium 180	0	9999999999999

Item no.	Article no.	Description	Serialnumber from	Serialnumber t
870	031550	de: Sechskantschraube DIN 931 - M8x35 - 8.8 - verzinkt LWK	0	9999999999999
880	044378	de: Seitenwand links rot besch. SilvaWIN	0	9999999999999
890	044379	de: Seitenwand rechts rot besch. SilvaWIN	0	9999999999999
895	047365	de: Sekundärluft - Anheizklappe zu SilvaWIN	0	9999999999999
900	044402	de: Sekundärluftdüse SilvaWIN bis Los19	0	9999999999999
900	046222	de: Sekundärluftdüse SilvaWIN ab Los20	0	9999999999999
910	044394	de: Sekundärluftklappe SilvaWIN	0	9999999999999
920	044340	de: Sekundärluftrohr SilvaWIN	0	9999999999999
940	003228	6.3A fuse (not illustrated)	0	9999999999999
950	003663	Fuse holder	0	9999999999999
960	016728	Locknut M 5, DIN 985, black for BioWIN 10-26, BioWIN XL 35-60	0	9999999999999
964	040159	de: Kabel (4x1mm² - Silikon) Synchronmotor-Endschalter HMX,SWK	0	9999999999999
966	040162	de: Kabel (7x1mm² - Silikon) Synchronmotor HMX,SWK	0	9999999999999
980	007437	de: Stehrost SilvaWIN	0	9999999999999
985	009994	Foot M12X40 JTB38 for HMX, EasyWIN Klassik/Premium 180, LogWIN Premium 180-505	0	9999999999999
990	040429	Servomotor for HMX, SilvaWIN, LogWIN Premium 180-505	0	9999999999999
1000	080664	FAX192 Poker for FAX,HMX,SilvaWIN,FKX,EasyWIN Klassik/Premium 180,LogWIN Premium 180-505	0	9999999999999
1010	040291	de: Strahlschutzblech Gebläse HMX, SilvaWIN	0	9999999999999
1020	502186	MES009M Immersion sensor	0	9999999999999
1030	007626	Thermocouple	0	9999999999999
1080	043411	de: Tragbügel für Aschelade SilvaWIN	0	9999999999999
1100	043106	de: Verbindungsbügel für Verkleidung SilvaWIN	0	9999999999999
1110	043808	Locking arm for control panel for BioWIN 10-26, BioWIN XL 35-60	0	9999999999999
1120	043426	Locking bracket for heating door / ash door for SilvaWIN,LogWIN Premium 180-505, BioWIN XL 35-60, EasyWIN Klassik/Premium 180	0	9999999999999
1145	033092	de: Zapfenschrauben DIN 927 5.8 M5X5 verz. (HMX, PMX)	0	9999999999999
1150	041914	Strain relief 4X, complete, assembled for ETX/SNX,PSX,GENIO/MultiWIN, SilvaWIN, BioWIN XL, BioWIN10-26, BioWIN XL 35-60	0	9999999999999
1160	044381	de: Zwischenblende mit Schwelgasleitblech SilvaWIN	0	9999999999999

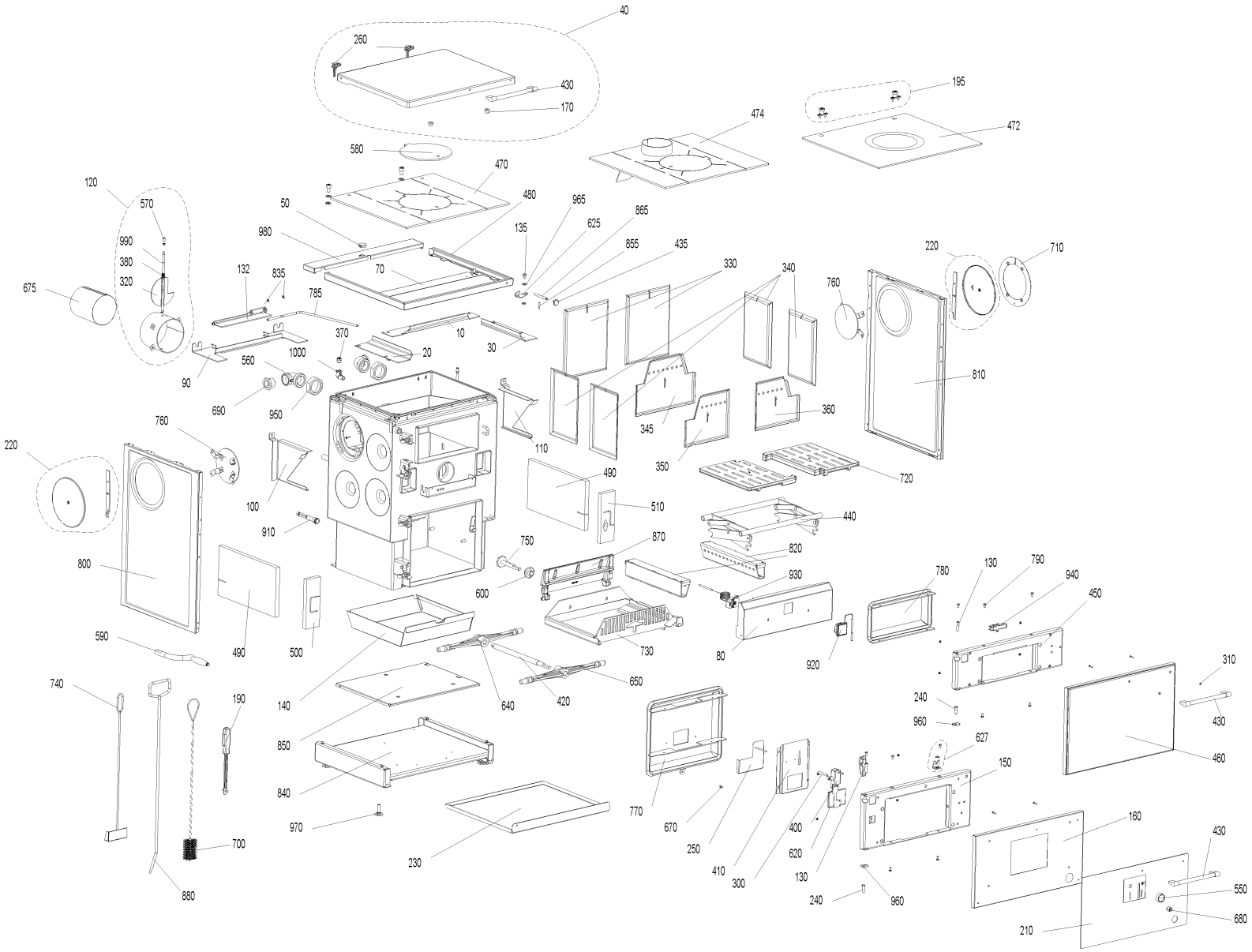
40
260
430
170
195
474
472
580
470
120
570
50
480
965
865
625
135
990
980
855
435
380
70
330
340
220
710
675
320
132
835
785
760
370
10
30
20
1000
560
90
810
690
950
345
360
760
110
350
720
220
490
100
510
440
910
750
870
820
800
930
780
130
790
940
450
600
590
490
500
730
80
920
310
740
140
640
420
650
240
430
190
960
850
627
460
150
840
770
670
400
160
970
250
620
430
230
410
130
550
700
300
240
960
680
880
210

Item no.	Article no.	Description	Serialnumber from	Serialnumber t
10	046864	Rear cover plate for VestoWIN KLassik 200-202, VestoWIN Klassik 170	201003000	9999999999999
20	046937	Cover plate left for VestoWIN Premium 200-202, VestoWIN Klassik 170	201003000	9999999999999
30	046938	Cover plate right for VestoWIN Premium 200-202, VestoWIN Klassik 170	201003000	9999999999999
40	047014	Boiler cover hood black/grey for VestoWIN Premium 202	201003000	9999999999999
40	047016	Boiler cover hood signal white for VestoWIN Premium 202, VestoWIN Klassik 170	201003000	9999999999999
40	048601	VEP-VEK170 Isulation cover grey	201003000	9999999999999
40	048602	VEP-VEK170 Isulation cover white	201003000	9999999999999
50	004995	Cover for HMX, PMX, VestoWIN Premium 200-202, VestoWIN Klassik 170-220	201003000	9999999999999
60	081582	Cover for threaded spindle for KSN,ZHN,VestoWIN Klassik 170-220	201003000	9999999999999
70	076236	Oven frame cover for KSL,KSN150/160/200,VestoWIN Klassik 170	201003000	9999999999999
80	046843	Thermostat cover for VestoWIN Premium 200-202, VestoWIN Klassik 170	201003000	9999999999999
90	047019	Flue gas baffle VEK 170 to lot 2	201003000	9999999999999
90	048053	Flue gas baffle rear for VestoWIN Klassik 170 from batch 3	201003000	9999999999999
120	086681	KSN050 Flue outlet with throttle flap (Ø=130) T for KSN160/200/150, VestoWIn Klassik 170	201003000	9999999999999
130	010019	Door mounting axle for VestoWIN Klassik 170-220, VestoWIN Premium 200-202	201003000	9999999999999
132	047914	Heating flap for VestoWIN Klassik 170 from batch 3/220 from batch 5	201003000	9999999999999
135	012502	Collar screw	201003000	9999999999999
140	046839	Ash pan for VestoWIN Klassik 170, VestoWIN Premium 200-202	201003000	9999999999999
150	046889	Ash door plate for VestoWIN Klassik 170, VestoWIN Premium 202	201003000	9999999999999
160	046850	Ash door liner for VestoWIN Klassik 170, VestoWIN Premium 200-202	201003000	9999999999999
170	023922	Insulating cover support Ø20x15mm for KSN/ZHN,VestoWIN Klassik 170-220, VestoWIN Premium 200-202	201003000	9999999999999
180	033432	Eyebolt similar to DIN 444 - B M10x50 - 4.6 - bright for VarioWIN, FireWIN, VestoWIN Premium 200-202, VestoWIN Klassik 170-220	201003000	9999999999999
190	073407	Operating handle for FKV,KSL,ZHL,FKN,FAX,ZHN,KSN,FKH,HMX,VestoWIN Premium 200-202, VestoWIN Klassik 170-220	201003000	9999999999999
195	048603	Fastening set	201003000	9999999999999
200	018139	Cylinder screw 4.2x13 DIN7981SP (not illustrated)	201003000	9999999999999
210	046927	VESTO001 Ash door cover signal white for VestoWIN Klassik 170	201003000	9999999999999
210	046931	VESTO002 Ash door cover brown for VestoWIN KLassik 170, VestoWIN Premium 202	201003000	9999999999999
210	046961	VESTO003 Ash door cover stainless steel for VestoWIN Klassik 170, VestoWIN Premium 202	201003000	9999999999999
220	047003	Dummy washer black/grey for VestoWIN Klassik 170-220, Vesto WIN Premium 200-202	201003000	9999999999999
220	047004	Dummy washer signal white for VestoWIN Klassik 170-220, VestoWIN Premium 200-202	201003000	9999999999999
230	080500	Ground tray (498x416x0,9) for ZHN,KSN150/160/200, VestoWIN Premium 200-202, VestoWIN Klassik 170	201003000	9999999999999
240	010018	Ø10x30 bolt, DIN1434 for VestoWIN Klassik 170-220, VestoWIN Premium 200-202	201003000	9999999999999
250	046821	Fuel economy slider for VestoWIN Premium 200-202, VestoWIN Klassik 170-220	201003000	9999999999999
260	049885	Hinge for top (galvanised)	201003000	9999999999999
270	046999	Ash/heating door rope seal for VestoWIN Premium 200-202, VestoWIN Klassik 170-220	201003000	9999999999999
280	047005	Hot plate rope seal for VestoWIN Klassik 170-220	201003000	9999999999999
290	031682	Klingerit 55x36x2 mm gasket for VestoWIn Klassik 170-220	201003000	9999999999999
300	046823	Spacer bush for VestoWIN Klassik 170-220	201003000	9999999999999
310	010020	Spacer sleeve for VestoWIN Klassik 170-220, VestoWIN Premium 200-202	201003000	9999999999999
320	080128	de: Drosselklappe(D106X3-5) ZHN,KSN160/200/150	201003000	9999999999999
330	046840	Rear hook-in plate for VestoWIN Klassik 170, VestoWIN Premium 200-202	201003000	9999999999999
340	046732	Hook-in plate left, right for VestoWIN Klassik 170-220, VestoWIN Premium 200-202	201003000	9999999999999
345	046841	Front hook-in plate for VestoWIN Klassik 170, VestoWIN Premium 200-202	201003000	9999999999999
370	004863	Manually operated bleeder VFR 3/8" for ZHN,KSN,GKW,NBE115,GKA/E,VestoWIN Klassik 170-220, VestoWIN Premium 200-202	201003000	9999999999999
380	004073	Throttle flap spring for VestoWIN Klassik 170-220, VestoWIN Premium 200-202	201003000	9999999999999
390	005959	Immersion sleeve spring for VestoWIN Premium 200-202, VestoWIN Klassik 170-220	201003000	9999999999999
400	004030	Combustion controlling mechanism for KSN,ZHN,FKV,VestoWIN Klassik 170-220, VestoWIN Premium 200-202	201003000	9999999999999
410	046848	Combustion controlling mechanism retaining plate for VestoWIN Klassik 170, VestoWIN Premium 200-202	201003000	9999999999999
420	081213	Threaded spindle (Ø20x377) for KSN,ZHN,VestoWIN Klassik 170-220, VestoWIN Premium 200-202	201003000	9999999999999
430	010026	Handle 249 mm for VestoWIN Klassik 170-220	201003000	9999999999999
435	010029	Handle for VestoWIN Premium 200-202, VestoWIN Klassik 170-220	201003000	9999999999999

Item no.	Article no.	Description	Serialnumber from	Serialnumber t
440	080675	Lifting jack for ZHN,KSN160/200/150, VestoWIN Premium 200-202, VestoWIN Klassik 170	201003000	9999999999999
450	046887	Heating door signal white for VestoWIN Premium 202, VestoWIN Klassik 170	201003000	9999999999999
460	046894	Heating door black/grey for VestoWIN Klassik 170, VestoWIN Premium 202	201003000	9999999999999
460	046895	Heating door signal white for VestoWIN Premium 202, VestoWIN Klassik 170	201003000	9999999999999
470	004081	Boiler hot plate (418x505x7mm) for KSN160/200/150,ZHN18/21, VestoWIN Premium 200-202, VestoWIN Klassik 170	201003000	9999999999999
472	016251	Ceran hob 170 VEK	201003000	9999999999999
474	004664	KSN015 Steel hot plate	201003000	9999999999999
480	047921	Oven frame for VestoWIN Klassik 170 from batch 3	201003000	9999999999999
480	080667	Stove frame KSN 160/200/150 and VEK170 to lot 2	201003000	9999999999999
490	003274	Boiler insulation side 380x220x20 for VestoWIN Premium 200-202, VestoWIN Klassik 170-220	201003000	9999999999999
500	003270	Boiler insulation front left 220x75x20 for VestoWIN Premium 200-202, VestoWIN Klassik 170-220	201003000	9999999999999
510	003271	Boiler insulation front right 220x75x20 for VestoWIN Premium 200-202, VestoWIN Klassik 170-220	201003000	9999999999999
520	059773	Base insulation 560X445X15 for VestoWIN Klassik 170-220	201003000	9999999999999
530	081132	Base plate insulation for VestoWIN Klassik 170	201003000	9999999999999
550	004057	Knob no.30.298-002-001 for ZHN,FKV,VestoWIN Klassik 170-220, VestoWIN Premium 200-202	201003000	9999999999999
560	012513	Knee no.95T 5/4“ for KSN, VestoWIN Premium 200-202, VestoWIN Klassik 170-220	201003000	9999999999999
570	023906	Throttle flap button (D10x15) for KSN,ZHN,VestoWIN Klassik 170-220, VestoWIN Premium 200-202	201003000	9999999999999
580	056780	Smoke hole cover (Ø=220mm) for ZHN,KSN,KSL,VestoWIN Klassik 170-220	201003000	9999999999999
590	085146	Crank for vibration device and grate lifting equipment for KSN,ZHN,VestoWIN Klassik 170-220	201003000	9999999999999
600	005111	Heating surface cleaning bearing block for FireWIN, VestoWIN Klassik 170-220, VarioWIN, VestoWIN Premium 200-202	201003000	9999999999999
610	020095	M5x16 TT raised countersunk head screw, DIN 7500ME for VestoWIN Premium 200-202, VestoWIN Klassik 170-220	201003000	9999999999999
620	046824	Air choke for VestoWIN Premium 200-202, VestoWIN Klassik 170-220	201003000	9999999999999
625	047924	L-bracket for VestoWIN Klassik 170-220	201003000	9999999999999
627	048906	Retro fittings L-bracket	201003000	9999999999999
630	072230	Wall support for ZHN16,KSN160/200/150, VestoWIN Klassik 170	201003000	9999999999999
640	060558	Nut for lifting equipment rear for ZHN210/212,KSN160/200/150,VestoWIN Klassik 170, VestoWIN Premium 200-202	201003000	9999999999999
650	081485	Nut for lifting equipment front for ZHN210/212,KSN160/200/150,VestoWIN Klassik 170, VestoWIN Premium 200-202	201003000	9999999999999
655	016659	Hexagon nut M8 DIN434	201003000	9999999999999
660	021598	M6x30 locating dowel pin, DIN 1472 for KSN,ZHN,VestoWIN Klassik 170-220, VestoWIN Premium 200-202	201003000	9999999999999
670	000299	Silicone buffer	201003000	9999999999999
675	072249	KSL051 Smoke pipe (Ø=130mm) for KSL15/20,ZHN16,KSN160/200/150, VestoWIN Premium 170	201003000	9999999999999
680	004065	KSN809 Knurled button for ZHN,KSN,VestoWIN Klassik 170-220, VestoWIN Premium 200-202, EasyWIN Klassik/Premium 180	201003000	9999999999999
690	004014	KSN095 241 5/4“-1“ reduction nipple, black for KSN,ZHN,VestoWIN Klassik 170-220, VestoWIN Premium 200-202	201003000	9999999999999
700	000280	KSL194 Cleaning brush (680x80/57x40) for FKU,ZHN,KSN,ZHL,KS,FKX,VestoWIN Klassik 170-220, VestoWIN Premium 200-202	201003000	9999999999999
710	503022	VESTO009 Stainless steel side flue cover plate	201003000	9999999999999
720	004779	Grate breadth=153 for VestoWIN 170, VestoWIN Premium 200-202	201003000	9999999999999
730	080292	KSN019 Grate support complete for ZHN,KSN160/200/150, VestoWIN Premium 200-202, VestoWIN Klassik 170	201003000	9999999999999
740	072192	Scratcher	201003000	9999999999999
750	046767	Vibration axle for VestoWIN Premium 200-202, VestoWIN Klassik 170-220	201003000	9999999999999
760	081612	KSN054 Protective plate for extraction of flue gas for KSN150/160/200, VestoWIN Klassik 170	201003000	9999999999999
770	046847	Ash door protection plate for VestoWIN Klassik 170, VestoWIN Premium 200-202	201003000	9999999999999
780	046853	Heating door protective plate for VestoWIN Klassik 170	201003000	9999999999999
785	047915	Driving rod for VestoWIN Klassik 170-220	201003000	9999999999999
790	031549	Hexagon screw M6x12 DIN 7500	201003000	9999999999999
800	049562	Side panel left signal white VEK170-220,VEP200-202,VESTO200	201003000	9999999999999
800	049564	Side panel left / grey	201003000	9999999999999
800	051361	de: Seitenwand links schwarzgrau inkl. Blindscheibe für VestoWIN und Vesto200	201003000	9999999999999
800	051362	de: Seitenwand links signalweiß inkl. Blindscheibe für VestoWIN und Vesto200	201003000	9999999999999
810	049563	Side panel right / white	201003000	9999999999999
810	049566	Side panel right / grey	201003000	9999999999999
810	051363	de: Seitenwand rechts schwarzgrau inkl. Blindscheibe für VestoWIN und Vesto200	201003000	9999999999999

Item no.	Article no.	Description	Serialnumber from	Serialnumber t
810	051364	de: Seitenwand rechts signalweiß inkl. Blindscheibe für VestoWIN und Vesto200	201003000	9999999999999
820	046736	Secondary air tube for VestoWIN Klassik 170-220, VestoWIN Premium 200-202	201003000	9999999999999
830	020885	M5x25 TT countersinking screw DIN 7500ME for KSN,ZHN,VestoWIN Klassik 170-220	201003000	9999999999999
835	048029	Lock washer Ø7 x 0,9 DIN 6799 material: 1.4568 for VestoWIN Klassik 170-220	201003000	9999999999999
840	080373	KSN802 Base for KSN,VestoWIN Klassik 170	201003000	9999999999999
850	080470	Base plate 381 X 364 X 0,9 for VestoWIN Klassik 170, VestoWIN Premium 200-202	201003000	9999999999999
855	018666	Clamping pin DIN 1481 - Ø4x20, for 3-way changeover unit for PMX, VarioWIN (* not illustrated), VestoWIN Premium 200-202, VestoWIN	201003000	9999999999999
860	017981	Split pin DIN 94, 4 x 32 galvanised for BioWIN 10-26, VestoWIN Klassik 170-220	201003000	9999999999999
865	047916	Rod heating flap for VestoWIN Premium 200-202, VestoWIN Klassik 170-220	201003000	9999999999999
870	007108	Vertical grate (226mm) for VestoWIN Klassik 170, VestoWIN Premium 200-202	201003000	9999999999999
880	072222	Poker (D9x750) for KSL,ZHL,ZHN,KSN,VestoWIN Klassik 170-220, VestoWIN Premium 200-202	201003000	9999999999999
890	000353	KSN091 WAF Plug 1/2“ - no. 290 1- black No. 49304 for KSN, OEK, VestoWIN Klassik 170-220, FireWIN, VarioWIN	201003000	9999999999999
900	004197	KSN094 WAF Plug no.290 5/4" for ZHN,KSN,Vesto WIN Klassik 170-220, VestoWIN Premium 200-202	201003000	9999999999999
910	005452	OK-915 Immersion sleeve (129 mm) No.55501.04 for EKX,OK/E,GWX,KSN,ZHN,OK-915,ETX,SNX,FKX,MIRA,FireWIN,VestoWIN Klassik 170-220,	201003000	9999999999999
920	004049	KSN027 Thermometer Z.Nr.SK 2014 IFC 52-052 KRF for ZHN,OEX,KSN,ASN,NBE,VestoWIN Premium 200-202, VestoWIN Klassik 170-220, fitting	201003000	9999999999999
930	010421	KSN100 Thermostat minimal 716 RU-9289 0-95 Grades for FK,GWX,KSN,ZHN,GSX,ETX,SNX,FKX,VestoWIN Klassik 170-220, VestoWIN Premium 20	201003000	9999999999999
940	061840	KSN022 Door catch for KSN,ZHN,PMX, VestoWIN Premium 200-202, VestoWIN Klassik 170-220	201003000	9999999999999
950	004413	KSN099 Union nut no.374 5/4“ for VestoWIN Premium 200-202, VestoWIN Klassik 170-220	201003000	9999999999999
960	006740	Washer MS25/10,5/6	201003000	9999999999999
960	047535	Bolt holder for VestoWIN Klassik 170 from batch 2, VestoWIN Klassik 220 from batch 4, VestoWIN Premium 200-202 from batch 3	201003000	9999999999999
965	018058	U-washer	201003000	9999999999999
970	079685	Adjustment foot for VestoWIN Premium 200-202, VestoWIN Klassik 170-220	201003000	9999999999999
980	059242	KSN945, VEK22 Wall end plate for KSN250,VestoWIN Klassik 170-220	201003000	9999999999999
990	066567	KSN9492 Throttle flap shaft for KSN210/250,ZHN18/21,VestoWIN Klassik 170-220, VestoWIN Premium 200-202	201003000	9999999999999
1000	004006	KSN097 Bracket no.92 3/8“ for ZHN,KSN,VestoWIN Klassik 170-220, VestoWIN Premium 200-202	201003000	9999999999999

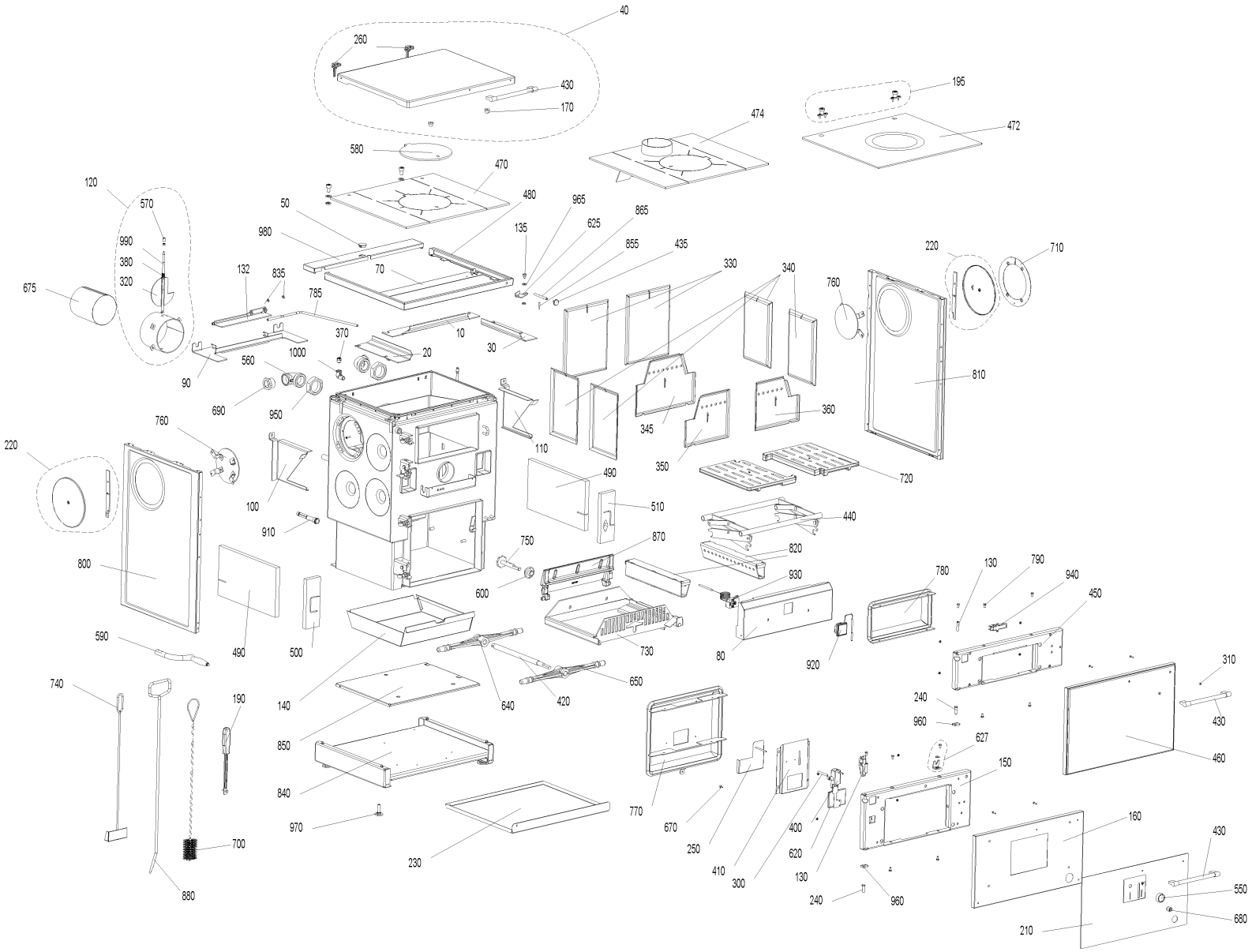
40
260
430
170
195
474
472
580
470
120
570
50
480
965
865
625
135
990
980
855
435
220
710
380
70
330
340
320
132
835
785
760
675
370
10
30
1000
20
560
90
810
690
950
345
360
760
110
350
220
490
720
100
510
440
910
750
870
820
800
930
780
130
790
940
450
600
590
490
500
730
80
920
310
740
140
640
420
650
240
430
190
960
850
627
460
150
840
770
670
400
160
970
250
620
430
230
410
130
550
700
300
240
960
680
880
210

Item no.	Article no.	Description	Serialnumber from	Serialnumber t
10	046864	Rear cover plate for VestoWIN KLassik 200-202, VestoWIN Klassik 170	201003000	9999999999999
20	046937	Cover plate left for VestoWIN Premium 200-202, VestoWIN Klassik 170	201003000	9999999999999
30	046938	Cover plate right for VestoWIN Premium 200-202, VestoWIN Klassik 170	201003000	9999999999999
40	047014	Boiler cover hood black/grey for VestoWIN Premium 202	201003000	9999999999999
40	047016	Boiler cover hood signal white for VestoWIN Premium 202, VestoWIN Klassik 170	201003000	9999999999999
40	048601	VEP-VEK170 Isulation cover grey	201003000	9999999999999
40	048602	VEP-VEK170 Isulation cover white	201003000	9999999999999
50	004995	Cover for HMX, PMX, VestoWIN Premium 200-202, VestoWIN Klassik 170-220	201003000	9999999999999
60	081582	Cover for threaded spindle for KSN,ZHN,VestoWIN Klassik 170-220	201003000	9999999999999
70	076236	Oven frame cover for KSL,KSN150/160/200,VestoWIN Klassik 170	201003000	9999999999999
80	046843	Thermostat cover for VestoWIN Premium 200-202, VestoWIN Klassik 170	201003000	9999999999999
90	047019	Flue gas baffle VEK 170 to lot 2	201003000	9999999999999
90	048053	Flue gas baffle rear for VestoWIN Klassik 170 from batch 3	201003000	9999999999999
120	086681	KSN050 Flue outlet with throttle flap (Ø=130) T for KSN160/200/150, VestoWIn Klassik 170	201003000	9999999999999
130	010019	Door mounting axle for VestoWIN Klassik 170-220, VestoWIN Premium 200-202	201003000	9999999999999
132	047914	Heating flap for VestoWIN Klassik 170 from batch 3/220 from batch 5	201003000	9999999999999
135	012502	Collar screw	201003000	9999999999999
140	046839	Ash pan for VestoWIN Klassik 170, VestoWIN Premium 200-202	201003000	9999999999999
150	046889	Ash door plate for VestoWIN Klassik 170, VestoWIN Premium 202	201003000	9999999999999
160	046850	Ash door liner for VestoWIN Klassik 170, VestoWIN Premium 200-202	201003000	9999999999999
170	023922	Insulating cover support Ø20x15mm for KSN/ZHN,VestoWIN Klassik 170-220, VestoWIN Premium 200-202	201003000	9999999999999
180	033432	Eyebolt similar to DIN 444 - B M10x50 - 4.6 - bright for VarioWIN, FireWIN, VestoWIN Premium 200-202, VestoWIN Klassik 170-220	201003000	9999999999999
190	073407	Operating handle for FKV,KSL,ZHL,FKN,FAX,ZHN,KSN,FKH,HMX,VestoWIN Premium 200-202, VestoWIN Klassik 170-220	201003000	9999999999999
195	048603	Fastening set	201003000	9999999999999
200	018139	Cylinder screw 4.2x13 DIN7981SP (not illustrated)	201003000	9999999999999
210	046927	VESTO001 Ash door cover signal white for VestoWIN Klassik 170	201003000	9999999999999
210	046931	VESTO002 Ash door cover brown for VestoWIN KLassik 170, VestoWIN Premium 202	201003000	9999999999999
210	046961	VESTO003 Ash door cover stainless steel for VestoWIN Klassik 170, VestoWIN Premium 202	201003000	9999999999999
220	047003	Dummy washer black/grey for VestoWIN Klassik 170-220, Vesto WIN Premium 200-202	201003000	9999999999999
220	047004	Dummy washer signal white for VestoWIN Klassik 170-220, VestoWIN Premium 200-202	201003000	9999999999999
230	080500	Ground tray (498x416x0,9) for ZHN,KSN150/160/200, VestoWIN Premium 200-202, VestoWIN Klassik 170	201003000	9999999999999
240	010018	Ø10x30 bolt, DIN1434 for VestoWIN Klassik 170-220, VestoWIN Premium 200-202	201003000	9999999999999
250	046821	Fuel economy slider for VestoWIN Premium 200-202, VestoWIN Klassik 170-220	201003000	9999999999999
260	049885	Hinge for top (galvanised)	201003000	9999999999999
270	046999	Ash/heating door rope seal for VestoWIN Premium 200-202, VestoWIN Klassik 170-220	201003000	9999999999999
280	047005	Hot plate rope seal for VestoWIN Klassik 170-220	201003000	9999999999999
290	031682	Klingerit 55x36x2 mm gasket for VestoWIn Klassik 170-220	201003000	9999999999999
300	046823	Spacer bush for VestoWIN Klassik 170-220	201003000	9999999999999
310	010020	Spacer sleeve for VestoWIN Klassik 170-220, VestoWIN Premium 200-202	201003000	9999999999999
320	080128	de: Drosselklappe(D106X3-5) ZHN,KSN160/200/150	201003000	9999999999999
330	046840	Rear hook-in plate for VestoWIN Klassik 170, VestoWIN Premium 200-202	201003000	9999999999999
340	046732	Hook-in plate left, right for VestoWIN Klassik 170-220, VestoWIN Premium 200-202	201003000	9999999999999
345	046841	Front hook-in plate for VestoWIN Klassik 170, VestoWIN Premium 200-202	201003000	9999999999999
370	004863	Manually operated bleeder VFR 3/8" for ZHN,KSN,GKW,NBE115,GKA/E,VestoWIN Klassik 170-220, VestoWIN Premium 200-202	201003000	9999999999999
380	004073	Throttle flap spring for VestoWIN Klassik 170-220, VestoWIN Premium 200-202	201003000	9999999999999
390	005959	Immersion sleeve spring for VestoWIN Premium 200-202, VestoWIN Klassik 170-220	201003000	9999999999999
400	004030	Combustion controlling mechanism for KSN,ZHN,FKV,VestoWIN Klassik 170-220, VestoWIN Premium 200-202	201003000	9999999999999
410	046848	Combustion controlling mechanism retaining plate for VestoWIN Klassik 170, VestoWIN Premium 200-202	201003000	9999999999999
420	081213	Threaded spindle (Ø20x377) for KSN,ZHN,VestoWIN Klassik 170-220, VestoWIN Premium 200-202	201003000	9999999999999
430	010026	Handle 249 mm for VestoWIN Klassik 170-220	201003000	9999999999999
435	010029	Handle for VestoWIN Premium 200-202, VestoWIN Klassik 170-220	201003000	9999999999999

Item no.	Article no.	Description	Serialnumber from	Serialnumber t
440	080675	Lifting jack for ZHN,KSN160/200/150, VestoWIN Premium 200-202, VestoWIN Klassik 170	201003000	9999999999999
450	046887	Heating door signal white for VestoWIN Premium 202, VestoWIN Klassik 170	201003000	9999999999999
460	046894	Heating door black/grey for VestoWIN Klassik 170, VestoWIN Premium 202	201003000	9999999999999
460	046895	Heating door signal white for VestoWIN Premium 202, VestoWIN Klassik 170	201003000	9999999999999
470	004081	Boiler hot plate (418x505x7mm) for KSN160/200/150,ZHN18/21, VestoWIN Premium 200-202, VestoWIN Klassik 170	201003000	9999999999999
472	016251	Ceran hob 170 VEK	201003000	9999999999999
474	004664	KSN015 Steel hot plate	201003000	9999999999999
480	047921	Oven frame for VestoWIN Klassik 170 from batch 3	201003000	9999999999999
480	080667	Stove frame KSN 160/200/150 and VEK170 to lot 2	201003000	9999999999999
490	003274	Boiler insulation side 380x220x20 for VestoWIN Premium 200-202, VestoWIN Klassik 170-220	201003000	9999999999999
500	003270	Boiler insulation front left 220x75x20 for VestoWIN Premium 200-202, VestoWIN Klassik 170-220	201003000	9999999999999
510	003271	Boiler insulation front right 220x75x20 for VestoWIN Premium 200-202, VestoWIN Klassik 170-220	201003000	9999999999999
520	059773	Base insulation 560X445X15 for VestoWIN Klassik 170-220	201003000	9999999999999
530	081132	Base plate insulation for VestoWIN Klassik 170	201003000	9999999999999
550	004057	Knob no.30.298-002-001 for ZHN,FKV,VestoWIN Klassik 170-220, VestoWIN Premium 200-202	201003000	9999999999999
560	012513	Knee no.95T 5/4“ for KSN, VestoWIN Premium 200-202, VestoWIN Klassik 170-220	201003000	9999999999999
570	023906	Throttle flap button (D10x15) for KSN,ZHN,VestoWIN Klassik 170-220, VestoWIN Premium 200-202	201003000	9999999999999
580	056780	Smoke hole cover (Ø=220mm) for ZHN,KSN,KSL,VestoWIN Klassik 170-220	201003000	9999999999999
590	085146	Crank for vibration device and grate lifting equipment for KSN,ZHN,VestoWIN Klassik 170-220	201003000	9999999999999
600	005111	Heating surface cleaning bearing block for FireWIN, VestoWIN Klassik 170-220, VarioWIN, VestoWIN Premium 200-202	201003000	9999999999999
610	020095	M5x16 TT raised countersunk head screw, DIN 7500ME for VestoWIN Premium 200-202, VestoWIN Klassik 170-220	201003000	9999999999999
620	046824	Air choke for VestoWIN Premium 200-202, VestoWIN Klassik 170-220	201003000	9999999999999
625	047924	L-bracket for VestoWIN Klassik 170-220	201003000	9999999999999
627	048906	Retro fittings L-bracket	201003000	9999999999999
630	072230	Wall support for ZHN16,KSN160/200/150, VestoWIN Klassik 170	201003000	9999999999999
640	060558	Nut for lifting equipment rear for ZHN210/212,KSN160/200/150,VestoWIN Klassik 170, VestoWIN Premium 200-202	201003000	9999999999999
650	081485	Nut for lifting equipment front for ZHN210/212,KSN160/200/150,VestoWIN Klassik 170, VestoWIN Premium 200-202	201003000	9999999999999
655	016659	Hexagon nut M8 DIN434	201003000	9999999999999
660	021598	M6x30 locating dowel pin, DIN 1472 for KSN,ZHN,VestoWIN Klassik 170-220, VestoWIN Premium 200-202	201003000	9999999999999
670	000299	Silicone buffer	201003000	9999999999999
675	072249	KSL051 Smoke pipe (Ø=130mm) for KSL15/20,ZHN16,KSN160/200/150, VestoWIN Premium 170	201003000	9999999999999
680	004065	KSN809 Knurled button for ZHN,KSN,VestoWIN Klassik 170-220, VestoWIN Premium 200-202, EasyWIN Klassik/Premium 180	201003000	9999999999999
690	004014	KSN095 241 5/4“-1“ reduction nipple, black for KSN,ZHN,VestoWIN Klassik 170-220, VestoWIN Premium 200-202	201003000	9999999999999
700	000280	KSL194 Cleaning brush (680x80/57x40) for FKU,ZHN,KSN,ZHL,KS,FKX,VestoWIN Klassik 170-220, VestoWIN Premium 200-202	201003000	9999999999999
710	503022	VESTO009 Stainless steel side flue cover plate	201003000	9999999999999
720	004779	Grate breadth=153 for VestoWIN 170, VestoWIN Premium 200-202	201003000	9999999999999
730	080292	KSN019 Grate support complete for ZHN,KSN160/200/150, VestoWIN Premium 200-202, VestoWIN Klassik 170	201003000	9999999999999
740	072192	Scratcher	201003000	9999999999999
750	046767	Vibration axle for VestoWIN Premium 200-202, VestoWIN Klassik 170-220	201003000	9999999999999
760	081612	KSN054 Protective plate for extraction of flue gas for KSN150/160/200, VestoWIN Klassik 170	201003000	9999999999999
770	046847	Ash door protection plate for VestoWIN Klassik 170, VestoWIN Premium 200-202	201003000	9999999999999
780	046853	Heating door protective plate for VestoWIN Klassik 170	201003000	9999999999999
785	047915	Driving rod for VestoWIN Klassik 170-220	201003000	9999999999999
790	031549	Hexagon screw M6x12 DIN 7500	201003000	9999999999999
800	049562	Side panel left signal white VEK170-220,VEP200-202,VESTO200	201003000	9999999999999
800	049564	Side panel left / grey	201003000	9999999999999
800	051361	de: Seitenwand links schwarzgrau inkl. Blindscheibe für VestoWIN und Vesto200	201003000	9999999999999
800	051362	de: Seitenwand links signalweiß inkl. Blindscheibe für VestoWIN und Vesto200	201003000	9999999999999
810	049563	Side panel right / white	201003000	9999999999999
810	049566	Side panel right / grey	201003000	9999999999999
810	051363	de: Seitenwand rechts schwarzgrau inkl. Blindscheibe für VestoWIN und Vesto200	201003000	9999999999999

Item no.	Article no.	Description	Serialnumber from	Serialnumber t
810	051364	de: Seitenwand rechts signalweiß inkl. Blindscheibe für VestoWIN und Vesto200	201003000	9999999999999
820	046736	Secondary air tube for VestoWIN Klassik 170-220, VestoWIN Premium 200-202	201003000	9999999999999
830	020885	M5x25 TT countersinking screw DIN 7500ME for KSN,ZHN,VestoWIN Klassik 170-220	201003000	9999999999999
835	048029	Lock washer Ø7 x 0,9 DIN 6799 material: 1.4568 for VestoWIN Klassik 170-220	201003000	9999999999999
840	080373	KSN802 Base for KSN,VestoWIN Klassik 170	201003000	9999999999999
850	080470	Base plate 381 X 364 X 0,9 for VestoWIN Klassik 170, VestoWIN Premium 200-202	201003000	9999999999999
855	018666	Clamping pin DIN 1481 - Ø4x20, for 3-way changeover unit for PMX, VarioWIN (* not illustrated), VestoWIN Premium 200-202, VestoWIN	201003000	9999999999999
860	017981	Split pin DIN 94, 4 x 32 galvanised for BioWIN 10-26, VestoWIN Klassik 170-220	201003000	9999999999999
865	047916	Rod heating flap for VestoWIN Premium 200-202, VestoWIN Klassik 170-220	201003000	9999999999999
870	007108	Vertical grate (226mm) for VestoWIN Klassik 170, VestoWIN Premium 200-202	201003000	9999999999999
880	072222	Poker (D9x750) for KSL,ZHL,ZHN,KSN,VestoWIN Klassik 170-220, VestoWIN Premium 200-202	201003000	9999999999999
890	000353	KSN091 WAF Plug 1/2“ - no. 290 1- black No. 49304 for KSN, OEK, VestoWIN Klassik 170-220, FireWIN, VarioWIN	201003000	9999999999999
900	004197	KSN094 WAF Plug no.290 5/4" for ZHN,KSN,Vesto WIN Klassik 170-220, VestoWIN Premium 200-202	201003000	9999999999999
910	005452	OK-915 Immersion sleeve (129 mm) No.55501.04 for EKX,OK/E,GWX,KSN,ZHN,OK-915,ETX,SNX,FKX,MIRA,FireWIN,VestoWIN Klassik 170-220,	201003000	9999999999999
920	004049	KSN027 Thermometer Z.Nr.SK 2014 IFC 52-052 KRF for ZHN,OEX,KSN,ASN,NBE,VestoWIN Premium 200-202, VestoWIN Klassik 170-220, fitting	201003000	9999999999999
930	010421	KSN100 Thermostat minimal 716 RU-9289 0-95 Grades for FK,GWX,KSN,ZHN,GSX,ETX,SNX,FKX,VestoWIN Klassik 170-220, VestoWIN Premium 20	201003000	9999999999999
940	061840	KSN022 Door catch for KSN,ZHN,PMX, VestoWIN Premium 200-202, VestoWIN Klassik 170-220	201003000	9999999999999
950	004413	KSN099 Union nut no.374 5/4“ for VestoWIN Premium 200-202, VestoWIN Klassik 170-220	201003000	9999999999999
960	006740	Washer MS25/10,5/6	201003000	9999999999999
960	047535	Bolt holder for VestoWIN Klassik 170 from batch 2, VestoWIN Klassik 220 from batch 4, VestoWIN Premium 200-202 from batch 3	201003000	9999999999999
965	018058	U-washer	201003000	9999999999999
970	079685	Adjustment foot for VestoWIN Premium 200-202, VestoWIN Klassik 170-220	201003000	9999999999999
980	059242	KSN945, VEK22 Wall end plate for KSN250,VestoWIN Klassik 170-220	201003000	9999999999999
990	066567	KSN9492 Throttle flap shaft for KSN210/250,ZHN18/21,VestoWIN Klassik 170-220, VestoWIN Premium 200-202	201003000	9999999999999
1000	004006	KSN097 Bracket no.92 3/8“ for ZHN,KSN,VestoWIN Klassik 170-220, VestoWIN Premium 200-202	201003000	9999999999999

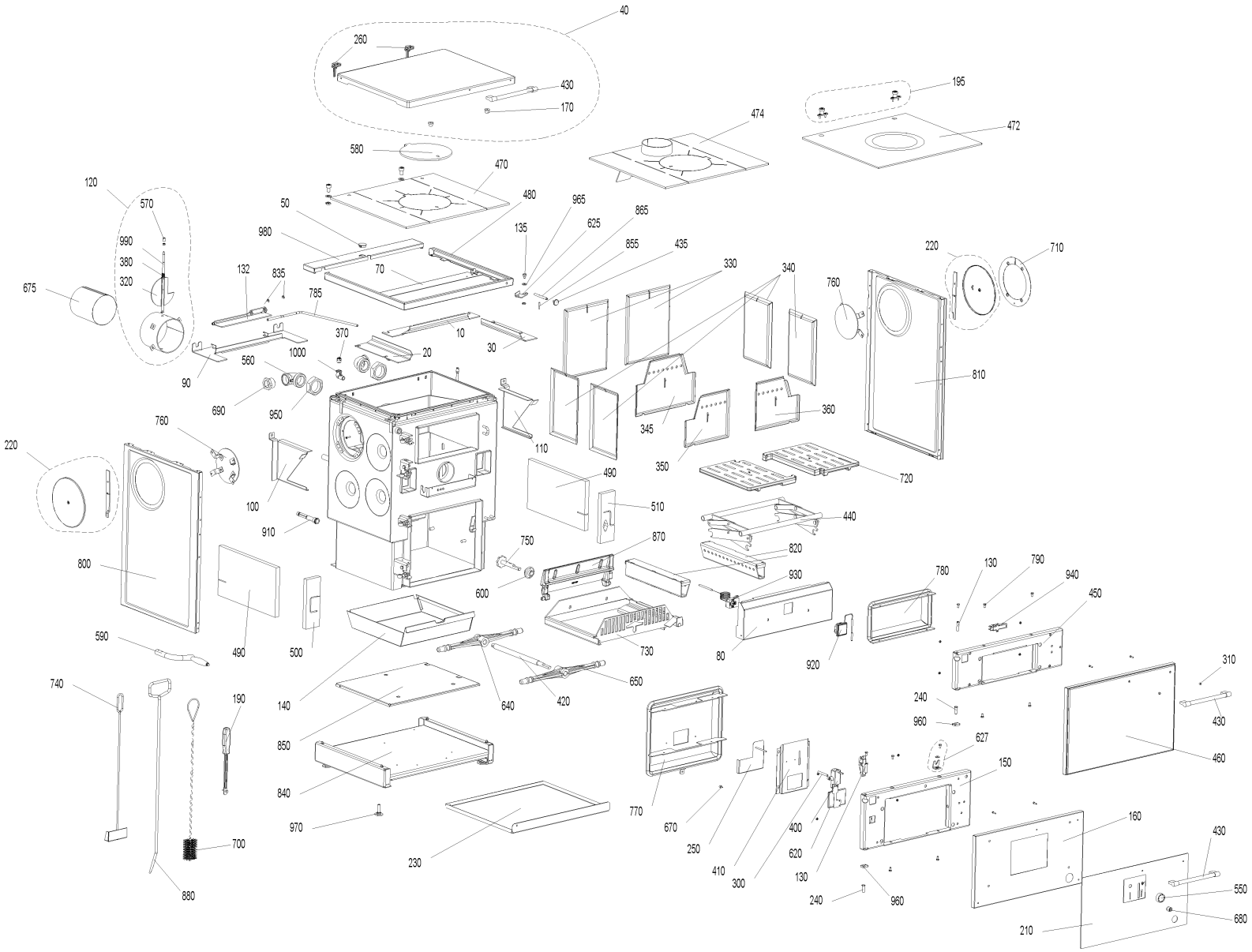
40
260
430
170
195
474
472
580
470
120
570
50
480
965
865
625
135
990
980
855
435
220
710
380
70
330
340
320
132
835
785
760
675
370
10
30
1000
20
560
90
810
690
950
345
360
760
110
350
220
490
720
100
510
440
910
750
870
820
800
930
780
130
790
940
450
600
590
490
500
730
80
920
310
740
140
650
640
420
240
430
190
960
850
627
460
150
840
770
670
400
160
970
250
620
430
230
410
130
550
700
300
240
960
680
880
210

Item no.	Article no.	Description	Serialnumber from	Serialnumber t
10	046758	Cover plate bent rear for VestoWIN Klassik 220	201005000	9999999999999
20	046759	Cover plate bent left for VestoWIN Klassik 220	201005000	9999999999999
30	046760	Cover plate bent right for VestoWIN Klassik 220	201005000	9999999999999
40	047000	Cover hood black/grey for VestoWIN Klassik 220	201005000	9999999999999
40	047001	Cover hood signal white for VestoWIN Klassik 220	201005000	9999999999999
40	048597	VEK Isulation cover grey	201005000	9999999999999
40	048598	VEK Isulation cover white	201005000	9999999999999
50	004995	Cover for HMX, PMX, VestoWIN Premium 200-202, VestoWIN Klassik 170-220	201005000	9999999999999
60	081582	Cover for threaded spindle for KSN,ZHN,VestoWIN Klassik 170-220	201005000	9999999999999
70	076244	Oven frame cover (572x85x0,9) for KSL,KSN250,VestoWIN Klassik 220	201005000	9999999999999
80	046826	Thermostat cover for VestoWIN Klassik 220	201005000	9999999999999
90	046746	Rear flue gas baffle VEK220 to lot 4	201005000	9999999999999
90	047919	Flue gas baffle rear for VestoWIN Klassik 220 from batch 5	201005000	9999999999999
100	046747	Flue gas baffle left for VestoWIN Klassik 220	201005000	9999999999999
110	046748	Flue gas baffle right for VestoWIN Klassik 220	201005000	9999999999999
120	085200	Flue outlet with throttle flap for KSN 210/250,VestoWIN Klassik 220	201005000	9999999999999
130	010019	Door mounting axle for VestoWIN Klassik 170-220, VestoWIN Premium 200-202	201005000	9999999999999
132	047914	Heating flap for VestoWIN Klassik 170 from batch 3/220 from batch 5	201005000	9999999999999
135	012502	Collar screw	201005000	9999999999999
140	046737	Ash pan for VestoWIN Klassik 220	201005000	9999999999999
150	046813	Ash door plate for VestoWIN Klassik 220	201005000	9999999999999
160	046816	Ash door liner for VestoWIN Klassik 220	201005000	9999999999999
170	023922	Insulating cover support Ø20x15mm for KSN/ZHN,VestoWIN Klassik 170-220, VestoWIN Premium 200-202	201005000	9999999999999
180	033432	Eyebolt similar to DIN 444 - B M10x50 - 4.6 - bright for VarioWIN, FireWIN, VestoWIN Premium 200-202, VestoWIN Klassik 170-220	201005000	9999999999999
190	073407	Operating handle for FKV,KSL,ZHL,FKN,FAX,ZHN,KSN,FKH,HMX,VestoWIN Premium 200-202, VestoWIN Klassik 170-220	201005000	9999999999999
195	048603	Fastening set	201005000	9999999999999
200	018139	Cylinder screw 4.2x13 DIN7981SP (not illustrated)	201005000	9999999999999
210	046831	VESTO005 Ash door cover signal white for VestoWIN Klassik 220	201005000	9999999999999
210	046832	VESTO006 Ash door cover brown for VestoWIN Klassik 220	201005000	9999999999999
210	046954	VESTO007 Ash door cover stainless steel for VestoWIN Klassik 220	201005000	9999999999999
220	047003	Dummy washer black/grey for VestoWIN Klassik 170-220, Vesto WIN Premium 200-202	201005000	9999999999999
220	047004	Dummy washer signal white for VestoWIN Klassik 170-220, VestoWIN Premium 200-202	201005000	9999999999999
230	059102	Ground protection tray for KSN250, VestoWIN Klassik 220	201005000	9999999999999
240	010018	Ø10x30 bolt, DIN1434 for VestoWIN Klassik 170-220, VestoWIN Premium 200-202	201005000	9999999999999
250	046821	Fuel economy slider for VestoWIN Premium 200-202, VestoWIN Klassik 170-220	201005000	9999999999999
260	049885	Hinge for top (galvanised)	201005000	9999999999999
270	046999	Ash/heating door rope seal for VestoWIN Premium 200-202, VestoWIN Klassik 170-220	201005000	9999999999999
280	047005	Hot plate rope seal for VestoWIN Klassik 170-220	201005000	9999999999999
290	031682	Klingerit 55x36x2 mm gasket for VestoWIn Klassik 170-220	201005000	9999999999999
300	046823	Spacer bush for VestoWIN Klassik 170-220	201005000	9999999999999
310	010020	Spacer sleeve for VestoWIN Klassik 170-220, VestoWIN Premium 200-202	201005000	9999999999999
320	068101	Throttle flap for KSN 250,ZHN18/21,KSN949, VestoWIN Premium 200-202	201005000	9999999999999
330	046733	Rear hook-in plate for VestoWIN Klassik 220	201005000	9999999999999
340	046732	Hook-in plate left, right for VestoWIN Klassik 170-220, VestoWIN Premium 200-202	201005000	9999999999999
350	046745	Front left hook-in plate for VestoWIN Klassik 220	201005000	9999999999999
360	046744	Front right hook-in plate for VestoWIN Klassik 220	201005000	9999999999999
370	004863	Manually operated bleeder VFR 3/8" for ZHN,KSN,GKW,NBE115,GKA/E,VestoWIN Klassik 170-220, VestoWIN Premium 200-202	201005000	9999999999999
380	004073	Throttle flap spring for VestoWIN Klassik 170-220, VestoWIN Premium 200-202	201005000	9999999999999
390	005959	Immersion sleeve spring for VestoWIN Premium 200-202, VestoWIN Klassik 170-220	201005000	9999999999999
400	004030	Combustion controlling mechanism for KSN,ZHN,FKV,VestoWIN Klassik 170-220, VestoWIN Premium 200-202	201005000	9999999999999
410	046819	Combustion controlling mechanism plate for VestoWIN Klassik 220	201005000	9999999999999

Item no.	Article no.	Description	Serialnumber from	Serialnumber t
420	081213	Threaded spindle (Ø20x377) for KSN,ZHN,VestoWIN Klassik 170-220, VestoWIN Premium 200-202	201005000	9999999999999
430	010026	Handle 249 mm for VestoWIN Klassik 170-220	201005000	9999999999999
435	010029	Handle for VestoWIN Premium 200-202, VestoWIN Klassik 170-220	201005000	9999999999999
440	059366	Lifting jack for KSN250, VestoWIN Klassik 220	201005000	9999999999999
450	046811	Heating door plate for VestoWIN Klassik 220	201005000	9999999999999
460	046828	Heating door signal white for VestoWIN Klassik 220	201005000	9999999999999
460	046829	Heating door liner black/grey for VestoWIN Klassik 220	201005000	9999999999999
470	001139	Hot plate for KSN210/250, VestoWIN Klassik 220	201005000	9999999999999
472	016250	Ceran hob 220 VEK	201005000	9999999999999
474	004656	KSN017 Steel hot plate	201005000	9999999999999
480	047922	Oven frame for VestoWIN Klassik 220 from batch 5	201005000	9999999999999
480	059234	Stove frame KSN250,VEK220 to lot 4	201005000	9999999999999
490	003274	Boiler insulation side 380x220x20 for VestoWIN Premium 200-202, VestoWIN Klassik 170-220	201005000	9999999999999
500	003270	Boiler insulation front left 220x75x20 for VestoWIN Premium 200-202, VestoWIN Klassik 170-220	201005000	9999999999999
510	003271	Boiler insulation front right 220x75x20 for VestoWIN Premium 200-202, VestoWIN Klassik 170-220	201005000	9999999999999
520	059773	Base insulation 560X445X15 for VestoWIN Klassik 170-220	201005000	9999999999999
530	059765	Base plate insulation for VestoWIN Klassik 220	201005000	9999999999999
550	004057	Knob no.30.298-002-001 for ZHN,FKV,VestoWIN Klassik 170-220, VestoWIN Premium 200-202	201005000	9999999999999
560	012513	Knee no.95T 5/4“ for KSN, VestoWIN Premium 200-202, VestoWIN Klassik 170-220	201005000	9999999999999
570	023906	Throttle flap button (D10x15) for KSN,ZHN,VestoWIN Klassik 170-220, VestoWIN Premium 200-202	201005000	9999999999999
580	056780	Smoke hole cover (Ø=220mm) for ZHN,KSN,KSL,VestoWIN Klassik 170-220	201005000	9999999999999
590	085146	Crank for vibration device and grate lifting equipment for KSN,ZHN,VestoWIN Klassik 170-220	201005000	9999999999999
600	005111	Heating surface cleaning bearing block for FireWIN, VestoWIN Klassik 170-220, VarioWIN, VestoWIN Premium 200-202	201005000	9999999999999
610	020095	M5x16 TT raised countersunk head screw, DIN 7500ME for VestoWIN Premium 200-202, VestoWIN Klassik 170-220	201005000	9999999999999
620	046824	Air choke for VestoWIN Premium 200-202, VestoWIN Klassik 170-220	201005000	9999999999999
625	047924	L-bracket for VestoWIN Klassik 170-220	201005000	9999999999999
627	048906	Retro fittings L-bracket	201005000	9999999999999
630	075752	Wall support for KSL25,ZHL,KSN250,ZHN18/21,VestoWIN Klassik 220, VestoWIN Premium 200-202	201005000	9999999999999
640	060562	Nut for lifting equipment rear for KSN 250, VestoWIN Klassik 220	201005000	9999999999999
650	059730	Nut for lifting equipment front for KSN250, VestoWIN Klassik 220	201005000	9999999999999
655	016659	Hexagon nut M8 DIN434	201005000	9999999999999
660	021598	M6x30 locating dowel pin, DIN 1472 for KSN,ZHN,VestoWIN Klassik 170-220, VestoWIN Premium 200-202	201005000	9999999999999
670	000299	Silicone buffer	201005000	9999999999999
675	075744	KSL411 Smoke pipe for KSL25,ZHL,ZHN21/18,KSN250,VestoWIN Klassik 220	201005000	9999999999999
680	004065	KSN809 Knurled button for ZHN,KSN,VestoWIN Klassik 170-220, VestoWIN Premium 200-202, EasyWIN Klassik/Premium 180	201005000	9999999999999
690	004014	KSN095 241 5/4“-1“ reduction nipple, black for KSN,ZHN,VestoWIN Klassik 170-220, VestoWIN Premium 200-202	201005000	9999999999999
700	000280	KSL194 Cleaning brush (680x80/57x40) for FKU,ZHN,KSN,ZHL,KS,FKX,VestoWIN Klassik 170-220, VestoWIN Premium 200-202	201005000	9999999999999
710	503022	VESTO009 Stainless steel side flue cover plate	201005000	9999999999999
720	004780	Grate (b=228) for VestoWIN Klassik 220	201005000	9999999999999
730	059323	KSN919 Grate support for KSN250,VestoWIN Klassik 220	201005000	9999999999999
740	072192	Scratcher	201005000	9999999999999
750	046767	Vibration axle for VestoWIN Premium 200-202, VestoWIN Klassik 170-220	201005000	9999999999999
760	059609	KSN954 Protective plate for extraction of flue gas for KSN210/250,VestoWIN Klassik 220	201005000	9999999999999
770	046809	Ash door protective plate for VestoWIN Klassik 220	201005000	9999999999999
780	046808	Heating door protective plate for VestoWIN Klassik 220	201005000	9999999999999
785	047915	Driving rod for VestoWIN Klassik 170-220	201005000	9999999999999
790	031549	Hexagon screw M6x12 DIN 7500	201005000	9999999999999
800	049562	Side panel left signal white VEK170-220,VEP200-202,VESTO200	201005000	9999999999999
800	049564	Side panel left / grey	201005000	9999999999999
800	051361	de: Seitenwand links schwarzgrau inkl. Blindscheibe für VestoWIN und Vesto200	201005000	9999999999999
800	051362	de: Seitenwand links signalweiß inkl. Blindscheibe für VestoWIN und Vesto200	201005000	9999999999999

Item no.	Article no.	Description	Serialnumber from	Serialnumber t
810	049563	Side panel right / white	201005000	9999999999999
810	049566	Side panel right / grey	201005000	9999999999999
810	051363	de: Seitenwand rechts schwarzgrau inkl. Blindscheibe für VestoWIN und Vesto200	201005000	9999999999999
810	051364	de: Seitenwand rechts signalweiß inkl. Blindscheibe für VestoWIN und Vesto200	201005000	9999999999999
820	046736	Secondary air tube for VestoWIN Klassik 170-220, VestoWIN Premium 200-202	201005000	9999999999999
830	020885	M5x25 TT countersinking screw DIN 7500ME for KSN,ZHN,VestoWIN Klassik 170-220	201005000	9999999999999
835	048029	Lock washer Ø7 x 0,9 DIN 6799 material: 1.4568 for VestoWIN Klassik 170-220	201005000	9999999999999
840	059315	Base for VestoWIN Klassik 220	201005000	9999999999999
850	059110	Base plate 512 x 378 x 1,5 for VestoWIN 220	201005000	9999999999999
855	018666	Clamping pin DIN 1481 - Ø4x20, for 3-way changeover unit for PMX, VarioWIN (* not illustrated), VestoWIN Premium 200-202, VestoWIN	201005000	9999999999999
860	017981	Split pin DIN 94, 4 x 32 galvanised for BioWIN 10-26, VestoWIN Klassik 170-220	201005000	9999999999999
865	047916	Rod heating flap for VestoWIN Premium 200-202, VestoWIN Klassik 170-220	201005000	9999999999999
870	007109	Vertical grate for VestoWIN Klassik 220	201005000	9999999999999
880	072222	Poker (D9x750) for KSL,ZHL,ZHN,KSN,VestoWIN Klassik 170-220, VestoWIN Premium 200-202	201005000	9999999999999
890	000353	KSN091 WAF Plug 1/2“ - no. 290 1- black No. 49304 for KSN, OEK, VestoWIN Klassik 170-220, FireWIN, VarioWIN	201005000	9999999999999
900	004197	KSN094 WAF Plug no.290 5/4" for ZHN,KSN,Vesto WIN Klassik 170-220, VestoWIN Premium 200-202	201005000	9999999999999
910	005452	OK-915 Immersion sleeve (129 mm) No.55501.04 for EKX,OK/E,GWX,KSN,ZHN,OK-915,ETX,SNX,FKX,MIRA,FireWIN,VestoWIN Klassik 170-220,	201005000	9999999999999
920	004049	KSN027 Thermometer Z.Nr.SK 2014 IFC 52-052 KRF for ZHN,OEX,KSN,ASN,NBE,VestoWIN Premium 200-202, VestoWIN Klassik 170-220, fitting	201005000	9999999999999
930	010421	KSN100 Thermostat minimal 716 RU-9289 0-95 Grades for FK,GWX,KSN,ZHN,GSX,ETX,SNX,FKX,VestoWIN Klassik 170-220, VestoWIN Premium 20	201005000	9999999999999
940	061840	KSN022 Door catch for KSN,ZHN,PMX, VestoWIN Premium 200-202, VestoWIN Klassik 170-220	201005000	9999999999999
950	004413	KSN099 Union nut no.374 5/4“ for VestoWIN Premium 200-202, VestoWIN Klassik 170-220	201005000	9999999999999
960	006740	Washer MS25/10,5/6	201005000	9999999999999
960	047535	Bolt holder for VestoWIN Klassik 170 from batch 2, VestoWIN Klassik 220 from batch 4, VestoWIN Premium 200-202 from batch 3	201005000	9999999999999
965	018058	U-washer	201005000	9999999999999
970	079685	Adjustment foot for VestoWIN Premium 200-202, VestoWIN Klassik 170-220	201005000	9999999999999
980	059242	KSN945, VEK22 Wall end plate for KSN250,VestoWIN Klassik 170-220	201005000	9999999999999
990	066567	KSN9492 Throttle flap shaft for KSN210/250,ZHN18/21,VestoWIN Klassik 170-220, VestoWIN Premium 200-202	201005000	9999999999999
1000	004006	KSN097 Bracket no.92 3/8“ for ZHN,KSN,VestoWIN Klassik 170-220, VestoWIN Premium 200-202	201005000	9999999999999

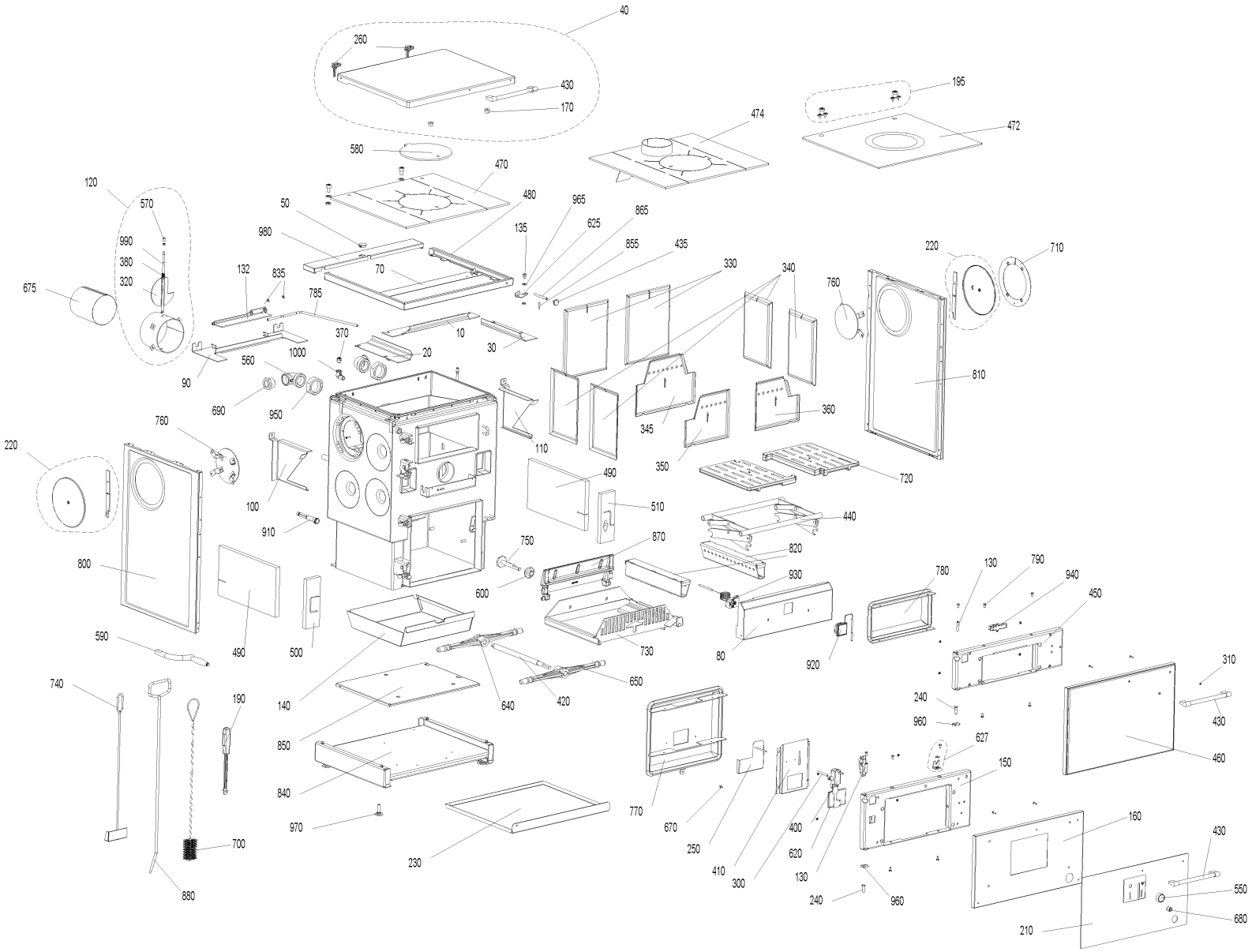
40
260
430
170
195
474
472
580
470
120
570
50
480
965
865
625
135
990
980
855
435
220
710
380
70
330
340
320
132
835
785
760
675
370
10
30
1000
20
560
90
810
690
950
345
360
760
110
350
220
490
720
100
510
440
910
750
870
820
800
930
780
130
790
940
450
600
590
490
500
730
80
920
310
740
140
640
420
650
240
430
190
960
850
627
460
150
840
770
670
400
160
970
250
620
430
230
410
130
550
700
300
240
960
680
880
210

Item no.	Article no.	Description	Serialnumber from	Serialnumber t
10	046758	Cover plate bent rear for VestoWIN Klassik 220	201005000	9999999999999
20	046759	Cover plate bent left for VestoWIN Klassik 220	201005000	9999999999999
30	046760	Cover plate bent right for VestoWIN Klassik 220	201005000	9999999999999
40	047000	Cover hood black/grey for VestoWIN Klassik 220	201005000	9999999999999
40	047001	Cover hood signal white for VestoWIN Klassik 220	201005000	9999999999999
40	048597	VEK Isulation cover grey	201005000	9999999999999
40	048598	VEK Isulation cover white	201005000	9999999999999
50	004995	Cover for HMX, PMX, VestoWIN Premium 200-202, VestoWIN Klassik 170-220	201005000	9999999999999
60	081582	Cover for threaded spindle for KSN,ZHN,VestoWIN Klassik 170-220	201005000	9999999999999
70	076244	Oven frame cover (572x85x0,9) for KSL,KSN250,VestoWIN Klassik 220	201005000	9999999999999
80	046826	Thermostat cover for VestoWIN Klassik 220	201005000	9999999999999
90	046746	Rear flue gas baffle VEK220 to lot 4	201005000	9999999999999
90	047919	Flue gas baffle rear for VestoWIN Klassik 220 from batch 5	201005000	9999999999999
100	046747	Flue gas baffle left for VestoWIN Klassik 220	201005000	9999999999999
110	046748	Flue gas baffle right for VestoWIN Klassik 220	201005000	9999999999999
120	085200	Flue outlet with throttle flap for KSN 210/250,VestoWIN Klassik 220	201005000	9999999999999
130	010019	Door mounting axle for VestoWIN Klassik 170-220, VestoWIN Premium 200-202	201005000	9999999999999
132	047914	Heating flap for VestoWIN Klassik 170 from batch 3/220 from batch 5	201005000	9999999999999
135	012502	Collar screw	201005000	9999999999999
140	046737	Ash pan for VestoWIN Klassik 220	201005000	9999999999999
150	046813	Ash door plate for VestoWIN Klassik 220	201005000	9999999999999
160	046816	Ash door liner for VestoWIN Klassik 220	201005000	9999999999999
170	023922	Insulating cover support Ø20x15mm for KSN/ZHN,VestoWIN Klassik 170-220, VestoWIN Premium 200-202	201005000	9999999999999
180	033432	Eyebolt similar to DIN 444 - B M10x50 - 4.6 - bright for VarioWIN, FireWIN, VestoWIN Premium 200-202, VestoWIN Klassik 170-220	201005000	9999999999999
190	073407	Operating handle for FKV,KSL,ZHL,FKN,FAX,ZHN,KSN,FKH,HMX,VestoWIN Premium 200-202, VestoWIN Klassik 170-220	201005000	9999999999999
195	048603	Fastening set	201005000	9999999999999
200	018139	Cylinder screw 4.2x13 DIN7981SP (not illustrated)	201005000	9999999999999
210	046831	VESTO005 Ash door cover signal white for VestoWIN Klassik 220	201005000	9999999999999
210	046832	VESTO006 Ash door cover brown for VestoWIN Klassik 220	201005000	9999999999999
210	046954	VESTO007 Ash door cover stainless steel for VestoWIN Klassik 220	201005000	9999999999999
220	047003	Dummy washer black/grey for VestoWIN Klassik 170-220, Vesto WIN Premium 200-202	201005000	9999999999999
220	047004	Dummy washer signal white for VestoWIN Klassik 170-220, VestoWIN Premium 200-202	201005000	9999999999999
230	059102	Ground protection tray for KSN250, VestoWIN Klassik 220	201005000	9999999999999
240	010018	Ø10x30 bolt, DIN1434 for VestoWIN Klassik 170-220, VestoWIN Premium 200-202	201005000	9999999999999
250	046821	Fuel economy slider for VestoWIN Premium 200-202, VestoWIN Klassik 170-220	201005000	9999999999999
260	049885	Hinge for top (galvanised)	201005000	9999999999999
270	046999	Ash/heating door rope seal for VestoWIN Premium 200-202, VestoWIN Klassik 170-220	201005000	9999999999999
280	047005	Hot plate rope seal for VestoWIN Klassik 170-220	201005000	9999999999999
290	031682	Klingerit 55x36x2 mm gasket for VestoWIn Klassik 170-220	201005000	9999999999999
300	046823	Spacer bush for VestoWIN Klassik 170-220	201005000	9999999999999
310	010020	Spacer sleeve for VestoWIN Klassik 170-220, VestoWIN Premium 200-202	201005000	9999999999999
320	068101	Throttle flap for KSN 250,ZHN18/21,KSN949, VestoWIN Premium 200-202	201005000	9999999999999
330	046733	Rear hook-in plate for VestoWIN Klassik 220	201005000	9999999999999
340	046732	Hook-in plate left, right for VestoWIN Klassik 170-220, VestoWIN Premium 200-202	201005000	9999999999999
350	046745	Front left hook-in plate for VestoWIN Klassik 220	201005000	9999999999999
360	046744	Front right hook-in plate for VestoWIN Klassik 220	201005000	9999999999999
370	004863	Manually operated bleeder VFR 3/8" for ZHN,KSN,GKW,NBE115,GKA/E,VestoWIN Klassik 170-220, VestoWIN Premium 200-202	201005000	9999999999999
380	004073	Throttle flap spring for VestoWIN Klassik 170-220, VestoWIN Premium 200-202	201005000	9999999999999
390	005959	Immersion sleeve spring for VestoWIN Premium 200-202, VestoWIN Klassik 170-220	201005000	9999999999999
400	004030	Combustion controlling mechanism for KSN,ZHN,FKV,VestoWIN Klassik 170-220, VestoWIN Premium 200-202	201005000	9999999999999
410	046819	Combustion controlling mechanism plate for VestoWIN Klassik 220	201005000	9999999999999

Item no.	Article no.	Description	Serialnumber from	Serialnumber t
420	081213	Threaded spindle (Ø20x377) for KSN,ZHN,VestoWIN Klassik 170-220, VestoWIN Premium 200-202	201005000	9999999999999
430	010026	Handle 249 mm for VestoWIN Klassik 170-220	201005000	9999999999999
435	010029	Handle for VestoWIN Premium 200-202, VestoWIN Klassik 170-220	201005000	9999999999999
440	059366	Lifting jack for KSN250, VestoWIN Klassik 220	201005000	9999999999999
450	046811	Heating door plate for VestoWIN Klassik 220	201005000	9999999999999
460	046828	Heating door signal white for VestoWIN Klassik 220	201005000	9999999999999
460	046829	Heating door liner black/grey for VestoWIN Klassik 220	201005000	9999999999999
470	001139	Hot plate for KSN210/250, VestoWIN Klassik 220	201005000	9999999999999
472	016250	Ceran hob 220 VEK	201005000	9999999999999
474	004656	KSN017 Steel hot plate	201005000	9999999999999
480	047922	Oven frame for VestoWIN Klassik 220 from batch 5	201005000	9999999999999
480	059234	Stove frame KSN250,VEK220 to lot 4	201005000	9999999999999
490	003274	Boiler insulation side 380x220x20 for VestoWIN Premium 200-202, VestoWIN Klassik 170-220	201005000	9999999999999
500	003270	Boiler insulation front left 220x75x20 for VestoWIN Premium 200-202, VestoWIN Klassik 170-220	201005000	9999999999999
510	003271	Boiler insulation front right 220x75x20 for VestoWIN Premium 200-202, VestoWIN Klassik 170-220	201005000	9999999999999
520	059773	Base insulation 560X445X15 for VestoWIN Klassik 170-220	201005000	9999999999999
530	059765	Base plate insulation for VestoWIN Klassik 220	201005000	9999999999999
550	004057	Knob no.30.298-002-001 for ZHN,FKV,VestoWIN Klassik 170-220, VestoWIN Premium 200-202	201005000	9999999999999
560	012513	Knee no.95T 5/4“ for KSN, VestoWIN Premium 200-202, VestoWIN Klassik 170-220	201005000	9999999999999
570	023906	Throttle flap button (D10x15) for KSN,ZHN,VestoWIN Klassik 170-220, VestoWIN Premium 200-202	201005000	9999999999999
580	056780	Smoke hole cover (Ø=220mm) for ZHN,KSN,KSL,VestoWIN Klassik 170-220	201005000	9999999999999
590	085146	Crank for vibration device and grate lifting equipment for KSN,ZHN,VestoWIN Klassik 170-220	201005000	9999999999999
600	005111	Heating surface cleaning bearing block for FireWIN, VestoWIN Klassik 170-220, VarioWIN, VestoWIN Premium 200-202	201005000	9999999999999
610	020095	M5x16 TT raised countersunk head screw, DIN 7500ME for VestoWIN Premium 200-202, VestoWIN Klassik 170-220	201005000	9999999999999
620	046824	Air choke for VestoWIN Premium 200-202, VestoWIN Klassik 170-220	201005000	9999999999999
625	047924	L-bracket for VestoWIN Klassik 170-220	201005000	9999999999999
627	048906	Retro fittings L-bracket	201005000	9999999999999
630	075752	Wall support for KSL25,ZHL,KSN250,ZHN18/21,VestoWIN Klassik 220, VestoWIN Premium 200-202	201005000	9999999999999
640	060562	Nut for lifting equipment rear for KSN 250, VestoWIN Klassik 220	201005000	9999999999999
650	059730	Nut for lifting equipment front for KSN250, VestoWIN Klassik 220	201005000	9999999999999
655	016659	Hexagon nut M8 DIN434	201005000	9999999999999
660	021598	M6x30 locating dowel pin, DIN 1472 for KSN,ZHN,VestoWIN Klassik 170-220, VestoWIN Premium 200-202	201005000	9999999999999
670	000299	Silicone buffer	201005000	9999999999999
675	075744	KSL411 Smoke pipe for KSL25,ZHL,ZHN21/18,KSN250,VestoWIN Klassik 220	201005000	9999999999999
680	004065	KSN809 Knurled button for ZHN,KSN,VestoWIN Klassik 170-220, VestoWIN Premium 200-202, EasyWIN Klassik/Premium 180	201005000	9999999999999
690	004014	KSN095 241 5/4“-1“ reduction nipple, black for KSN,ZHN,VestoWIN Klassik 170-220, VestoWIN Premium 200-202	201005000	9999999999999
700	000280	KSL194 Cleaning brush (680x80/57x40) for FKU,ZHN,KSN,ZHL,KS,FKX,VestoWIN Klassik 170-220, VestoWIN Premium 200-202	201005000	9999999999999
710	503022	VESTO009 Stainless steel side flue cover plate	201005000	9999999999999
720	004780	Grate (b=228) for VestoWIN Klassik 220	201005000	9999999999999
730	059323	KSN919 Grate support for KSN250,VestoWIN Klassik 220	201005000	9999999999999
740	072192	Scratcher	201005000	9999999999999
750	046767	Vibration axle for VestoWIN Premium 200-202, VestoWIN Klassik 170-220	201005000	9999999999999
760	059609	KSN954 Protective plate for extraction of flue gas for KSN210/250,VestoWIN Klassik 220	201005000	9999999999999
770	046809	Ash door protective plate for VestoWIN Klassik 220	201005000	9999999999999
780	046808	Heating door protective plate for VestoWIN Klassik 220	201005000	9999999999999
785	047915	Driving rod for VestoWIN Klassik 170-220	201005000	9999999999999
790	031549	Hexagon screw M6x12 DIN 7500	201005000	9999999999999
800	049562	Side panel left signal white VEK170-220,VEP200-202,VESTO200	201005000	9999999999999
800	049564	Side panel left / grey	201005000	9999999999999
800	051361	de: Seitenwand links schwarzgrau inkl. Blindscheibe für VestoWIN und Vesto200	201005000	9999999999999
800	051362	de: Seitenwand links signalweiß inkl. Blindscheibe für VestoWIN und Vesto200	201005000	9999999999999

Item no.	Article no.	Description	Serialnumber from	Serialnumber t
810	049563	Side panel right / white	201005000	9999999999999
810	049566	Side panel right / grey	201005000	9999999999999
810	051363	de: Seitenwand rechts schwarzgrau inkl. Blindscheibe für VestoWIN und Vesto200	201005000	9999999999999
810	051364	de: Seitenwand rechts signalweiß inkl. Blindscheibe für VestoWIN und Vesto200	201005000	9999999999999
820	046736	Secondary air tube for VestoWIN Klassik 170-220, VestoWIN Premium 200-202	201005000	9999999999999
830	020885	M5x25 TT countersinking screw DIN 7500ME for KSN,ZHN,VestoWIN Klassik 170-220	201005000	9999999999999
835	048029	Lock washer Ø7 x 0,9 DIN 6799 material: 1.4568 for VestoWIN Klassik 170-220	201005000	9999999999999
840	059315	Base for VestoWIN Klassik 220	201005000	9999999999999
850	059110	Base plate 512 x 378 x 1,5 for VestoWIN 220	201005000	9999999999999
855	018666	Clamping pin DIN 1481 - Ø4x20, for 3-way changeover unit for PMX, VarioWIN (* not illustrated), VestoWIN Premium 200-202, VestoWIN	201005000	9999999999999
860	017981	Split pin DIN 94, 4 x 32 galvanised for BioWIN 10-26, VestoWIN Klassik 170-220	201005000	9999999999999
865	047916	Rod heating flap for VestoWIN Premium 200-202, VestoWIN Klassik 170-220	201005000	9999999999999
870	007109	Vertical grate for VestoWIN Klassik 220	201005000	9999999999999
880	072222	Poker (D9x750) for KSL,ZHL,ZHN,KSN,VestoWIN Klassik 170-220, VestoWIN Premium 200-202	201005000	9999999999999
890	000353	KSN091 WAF Plug 1/2“ - no. 290 1- black No. 49304 for KSN, OEK, VestoWIN Klassik 170-220, FireWIN, VarioWIN	201005000	9999999999999
900	004197	KSN094 WAF Plug no.290 5/4" for ZHN,KSN,Vesto WIN Klassik 170-220, VestoWIN Premium 200-202	201005000	9999999999999
910	005452	OK-915 Immersion sleeve (129 mm) No.55501.04 for EKX,OK/E,GWX,KSN,ZHN,OK-915,ETX,SNX,FKX,MIRA,FireWIN,VestoWIN Klassik 170-220,	201005000	9999999999999
920	004049	KSN027 Thermometer Z.Nr.SK 2014 IFC 52-052 KRF for ZHN,OEX,KSN,ASN,NBE,VestoWIN Premium 200-202, VestoWIN Klassik 170-220, fitting	201005000	9999999999999
930	010421	KSN100 Thermostat minimal 716 RU-9289 0-95 Grades for FK,GWX,KSN,ZHN,GSX,ETX,SNX,FKX,VestoWIN Klassik 170-220, VestoWIN Premium 20	201005000	9999999999999
940	061840	KSN022 Door catch for KSN,ZHN,PMX, VestoWIN Premium 200-202, VestoWIN Klassik 170-220	201005000	9999999999999
950	004413	KSN099 Union nut no.374 5/4“ for VestoWIN Premium 200-202, VestoWIN Klassik 170-220	201005000	9999999999999
960	006740	Washer MS25/10,5/6	201005000	9999999999999
960	047535	Bolt holder for VestoWIN Klassik 170 from batch 2, VestoWIN Klassik 220 from batch 4, VestoWIN Premium 200-202 from batch 3	201005000	9999999999999
965	018058	U-washer	201005000	9999999999999
970	079685	Adjustment foot for VestoWIN Premium 200-202, VestoWIN Klassik 170-220	201005000	9999999999999
980	059242	KSN945, VEK22 Wall end plate for KSN250,VestoWIN Klassik 170-220	201005000	9999999999999
990	066567	KSN9492 Throttle flap shaft for KSN210/250,ZHN18/21,VestoWIN Klassik 170-220, VestoWIN Premium 200-202	201005000	9999999999999
1000	004006	KSN097 Bracket no.92 3/8“ for ZHN,KSN,VestoWIN Klassik 170-220, VestoWIN Premium 200-202	201005000	9999999999999

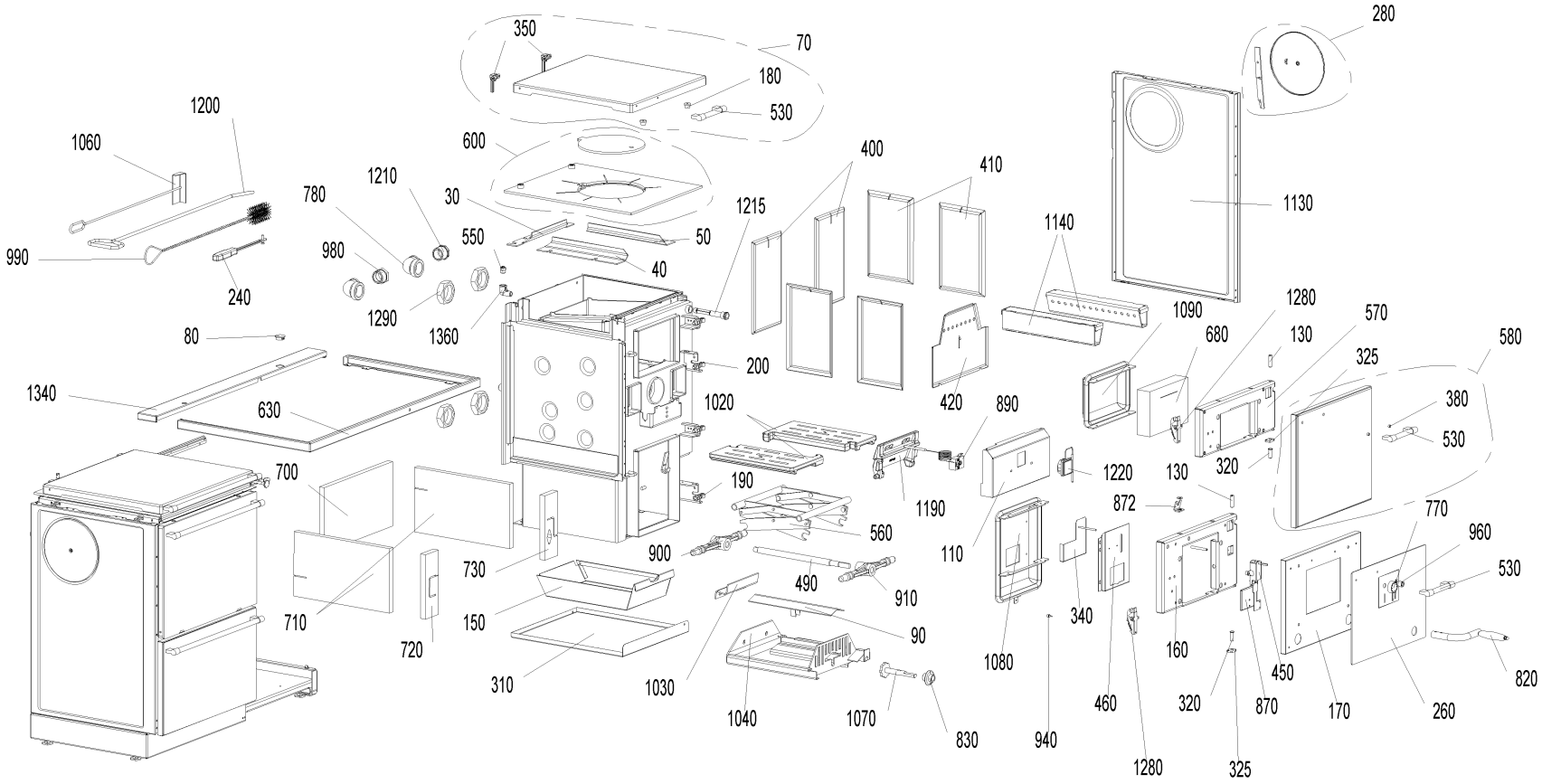
350
70
180
530
280
1200
1060
600
400
410
1130
1210
780
30
1215
1140
990
980
550
50
40
240
1290
1360
1090
1280
570
680
130
580
80
200
325
1340
630
1020
420
890
380
530
700
190
1220
130
320
1190
872
770
560
960
110
730
900
490
910
530
710
150
340
90
720
1080
160
450
820
310
1030
460
320
870
170
260
1040
1070
830
940
1280
325

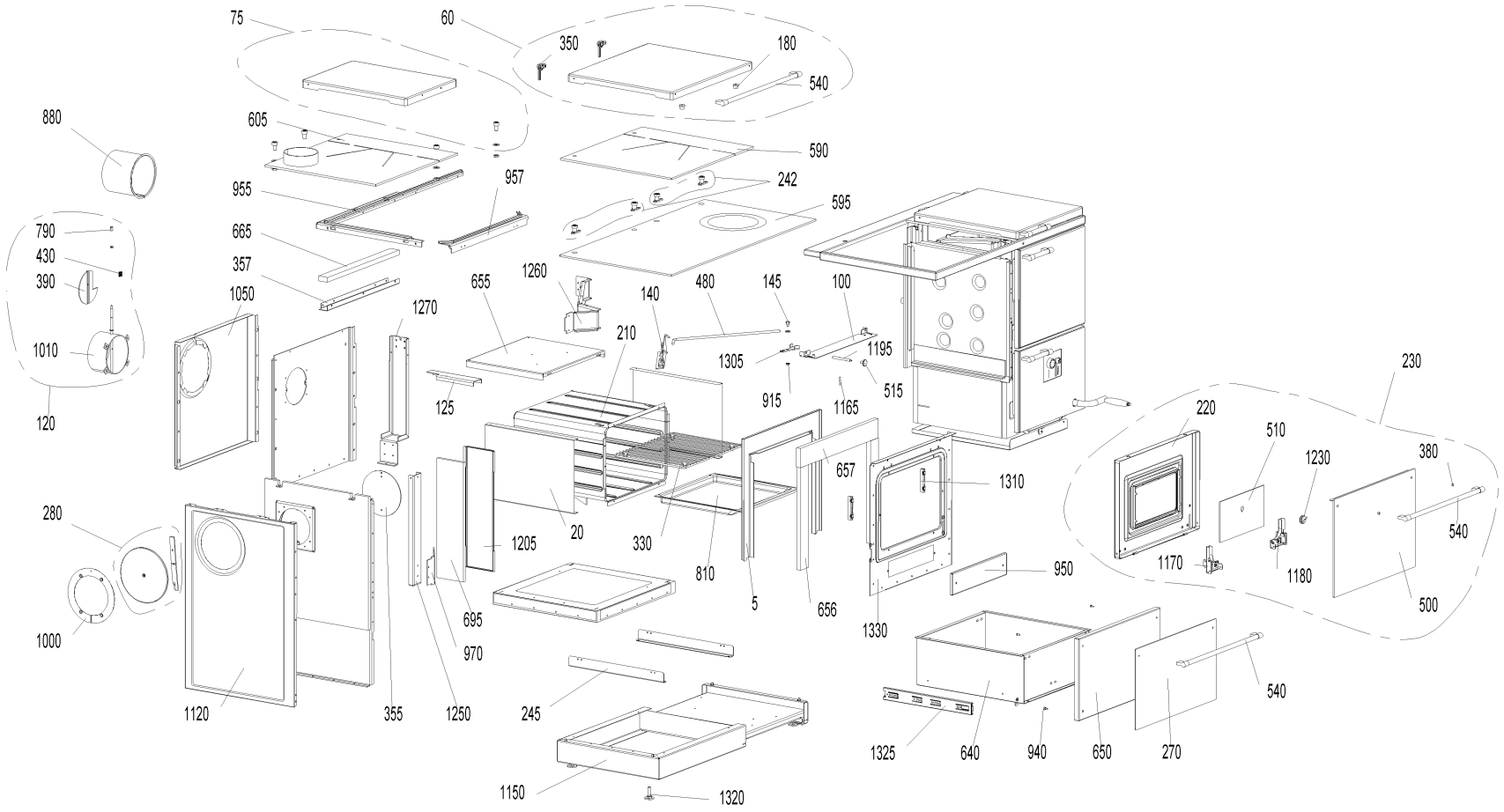
75
60
350
180
540
880
605
590
242
955
957
595
790
430
390
665
357
1050
1260
655
140
480
145
100
1270
210
1195
1010
1305
515
915
1165
125
120
230
220
510
1230
380
657
1310
280
20
1205
330
810
540
1170
1180
950
1000
695
5
656
1330
500
970
1120
355
1250
245
540
1325
640
940
650
270
1150
1320

Item no.	Article no.	Description	Serialnumber from	Serialnumber t
5	047877	Oven cover plate inside for VestoWIN Premium 200 - 202	201105000	9999999999999
10	075450	de: Isolierblech hinten Backrohr ZHN (405X126X1-1,25)	201105000	9999999999999
20	075442	Oven cover plate side for VestoWIN Premium 200-202	201105000	9999999999999
30	046864	Rear cover plate for VestoWIN KLassik 200-202, VestoWIN Klassik 170	201105000	9999999999999
40	046937	Cover plate left for VestoWIN Premium 200-202, VestoWIN Klassik 170	201105000	9999999999999
50	046938	Cover plate right for VestoWIN Premium 200-202, VestoWIN Klassik 170	201105000	9999999999999
60	047012	Oven cover hood black/grey for VestoWIN Premium 200-202	201105000	9999999999999
60	047013	Oven cover hood signal white for VestoWIN Premium 200-202	201105000	9999999999999
60	048595	VEP Isulation cover black	201105000	9999999999999
60	048596	VEP Isulation cover white	201105000	9999999999999
70	047017	Boiler cover hood black/grey for VestoWIN Premium 200, VestoWIN Klassik 170	201105000	9999999999999
70	047018	Boiler cover hood signal white for VestoWIN Premium 200	201105000	9999999999999
70	048599	VEP Isulation cover grey	201105000	9999999999999
70	048600	VEP200 Isulation cover	201105000	9999999999999
75	048169	flue tube - cover hood top signal white for VestoWIN Premium 200-202	201105000	9999999999999
75	048170	flue tube - cover hood top black/grey for VestoWIN Premium 200-202	201105000	9999999999999
80	004995	Cover for HMX, PMX, VestoWIN Premium 200-202, VestoWIN Klassik 170-220	201105000	9999999999999
90	081582	Cover for threaded spindle for KSN,ZHN,VestoWIN Klassik 170-220	201105000	9999999999999
100	075574	Oven frame cover for VestoWIN Premium 200-202	201105000	9999999999999
110	046843	Thermostat cover for VestoWIN Premium 200-202, VestoWIN Klassik 170	201105000	9999999999999
120	085472	Flue outlet with throttle flap for VestoWIN Premium 200-202	201105000	9999999999999
125	047881	spacer ledge for VestoWIN Premium 200	201105000	9999999999999
130	010019	Door mounting axle for VestoWIN Klassik 170-220, VestoWIN Premium 200-202	201105000	9999999999999
140	047906	Heating flap VEP	201105000	9999999999999
140	067121	Heating flap for ZHL,ZHN,VestoWIN Premium 200-202 ZHN036	201105000	9999999999999
145	012502	Collar screw	201105000	9999999999999
150	046839	Ash pan for VestoWIN Klassik 170, VestoWIN Premium 200-202	201105000	9999999999999
160	046852	Ash door plate for VestoWIN Premium 200	201105000	9999999999999
170	046850	Ash door liner for VestoWIN Klassik 170, VestoWIN Premium 200-202	201105000	9999999999999
180	023922	Insulating cover support Ø20x15mm for KSN/ZHN,VestoWIN Klassik 170-220, VestoWIN Premium 200-202	201105000	9999999999999
190	033436	M10x40 eyebolt, DIN 444 for VestoWIN Premium 200-202	201105000	9999999999999
200	033432	Eyebolt similar to DIN 444 - B M10x50 - 4.6 - bright for VarioWIN, FireWIN, VestoWIN Premium 200-202, VestoWIN Klassik 170-220	201105000	9999999999999
210	050301	Oven set for ZHN	201105000	9999999999999
220	047079	Oven door for VestoWIN Premium 200-202	201105000	9999999999999
230	046920	Oven door complete signal white for VestoWIN Premium 200-202	201105000	9999999999999
230	046936	Oven door complete black/grey for VestoWIN Premium 200-202	201105000	9999999999999
240	073407	Operating handle for FKV,KSL,ZHL,FKN,FAX,ZHN,KSN,FKH,HMX,VestoWIN Premium 200-202, VestoWIN Klassik 170-220	201105000	9999999999999
242	048603	Fastening set	201105000	9999999999999
245	047887	mounting bracket - complete pullout for VestoWIN Premium 200-202	201105000	9999999999999
250	018139	Cylinder screw 4.2x13 DIN7981SP (not illustrated)	201105000	9999999999999
260	046929	VESTO1 Ash door cover signal white for VestoWIN Premium 200	201105000	9999999999999
260	046930	Ash door cover brown for VestoWIN Premium 200	201105000	9999999999999
260	046959	Ash door cover stainless steel for VestoWIN Premium 200	201105000	9999999999999
270	046924	VESTO2 Wood chest cover signal white for VestoWIN Premium 200-202	201105000	9999999999999
270	046925	VESTO4 Wood chest cover brown for VestoWIN Premium 200-202	201105000	9999999999999
270	046957	Wood chest cover stainless steel for VestoWIN Premium 200-202	201105000	9999999999999
280	047003	Dummy washer black/grey for VestoWIN Klassik 170-220, Vesto WIN Premium 200-202	201105000	9999999999999
280	047004	Dummy washer signal white for VestoWIN Klassik 170-220, VestoWIN Premium 200-202	201105000	9999999999999
290	066834	Buttom for ZHN,VEP	201105000	9999999999999
300	066842	Bottom for ZHN,VEP	201105000	9999999999999
310	080500	Ground tray (498x416x0,9) for ZHN,KSN150/160/200, VestoWIN Premium 200-202, VestoWIN Klassik 170	201105000	9999999999999

Item no.	Article no.	Description	Serialnumber from	Serialnumber
320	010018	Ø10x30 bolt, DIN1434 for VestoWIN Klassik 170-220, VestoWIN Premium 200-202	201105000	9999999999999
325	047535	Bolt holder for VestoWIN Klassik 170 from batch 2, VestoWIN Klassik 220 from batch 4, VestoWIN Premium 200-202 from batch 3	201105000	9999999999999
330	003174	Grid iron for ZHN, VestoWIN Premium 200-202	201105000	9999999999999
340	046821	Fuel economy slider for VestoWIN Premium 200-202, VestoWIN Klassik 170-220	201105000	9999999999999
350	049885	Hinge for top (galvanised)	201105000	9999999999999
355	048044	Cover disc for VestoWIN Premium 200-202	201105000	9999999999999
357	048043	Sealing ledge for VestoWIN Premium 200-202	201105000	9999999999999
360	046999	Ash/heating door rope seal for VestoWIN Premium 200-202, VestoWIN Klassik 170-220	201105000	9999999999999
370	047011	Hot plate rope seal for VestoWIN Premium 200-202	201105000	9999999999999
380	010020	Spacer sleeve for VestoWIN Klassik 170-220, VestoWIN Premium 200-202	201105000	9999999999999
390	068101	Throttle flap for KSN 250,ZHN18/21,KSN949, VestoWIN Premium 200-202	201105000	9999999999999
400	046840	Rear hook-in plate for VestoWIN Klassik 170, VestoWIN Premium 200-202	201105000	9999999999999
410	046732	Hook-in plate left, right for VestoWIN Klassik 170-220, VestoWIN Premium 200-202	201105000	9999999999999
420	046841	Front hook-in plate for VestoWIN Klassik 170, VestoWIN Premium 200-202	201105000	9999999999999
430	004073	Throttle flap spring for VestoWIN Klassik 170-220, VestoWIN Premium 200-202	201105000	9999999999999
440	005959	Immersion sleeve spring for VestoWIN Premium 200-202, VestoWIN Klassik 170-220	201105000	9999999999999
450	004030	Combustion controlling mechanism for KSN,ZHN,FKV,VestoWIN Klassik 170-220, VestoWIN Premium 200-202	201105000	9999999999999
460	046848	Combustion controlling mechanism retaining plate for VestoWIN Klassik 170, VestoWIN Premium 200-202	201105000	9999999999999
470	019410	Wing nut M6	201105000	9999999999999
480	047905	Heating flap linkage	201105000	9999999999999
480	067326	Heating flap linkage for ZHN160/210, VestoWIN Premium 200	201105000	9999999999999
490	081213	Threaded spindle (Ø20x377) for KSN,ZHN,VestoWIN Klassik 170-220, VestoWIN Premium 200-202	201105000	9999999999999
500	046836	Glass oven signal white for VestoWIN Premium 200-202	201105000	9999999999999
500	046935	Glass oven black/grey for VestoWIN Premium 200-202	201105000	9999999999999
510	054003	de: Glasscheibe inkl. Thermometer für Backrohrtüre ZHN und VEP bis 01/2014	201105000	9999999999999
515	010029	Handle for VestoWIN Premium 200-202, VestoWIN Klassik 170-220	201105000	9999999999999
520	004928	Glass fibre cord 5/5mm for FireWIN, ZHN, VestoWIN Premium 200-202	201105000	9999999999999
530	010028	Handle 149 for VestoWIN Premium 200-202, fittings room Vesto 200	201105000	9999999999999
540	010027	Handle 519 for VestoWIN Premium 200-202	201105000	9999999999999
545	012688	de: Haltering mit Kappe UN 9318 verchromt ZHN	201105000	9999999999999
550	004863	Manually operated bleeder VFR 3/8" for ZHN,KSN,GKW,NBE115,GKA/E,VestoWIN Klassik 170-220, VestoWIN Premium 200-202	201105000	9999999999999
560	080675	Lifting jack for ZHN,KSN160/200/150, VestoWIN Premium 200-202, VestoWIN Klassik 170	201105000	9999999999999
570	046859	Heating door plate for VestoWIN Premium 200	201105000	9999999999999
580	046919	Heating door signal white for VestoWIN Premium 200	201105000	9999999999999
580	046934	Heating door black/grey for VestoWIN Premium 200	201105000	9999999999999
590	004618	Oven hot plate (547x505x7mm) for ZHN160/180/210, VestoWIN Premium 200	201105000	9999999999999
595	016252	Ceran hob 200 VEP	201105000	9999999999999
600	004081	Boiler hot plate (418x505x7mm) for KSN160/200/150,ZHN18/21, VestoWIN Premium 200-202, VestoWIN Klassik 170	201105000	9999999999999
605	048171	Hot plate - flue tube top for VestoWIN Premium 200	201105000	9999999999999
610	067598	de: Herdplattenauflage hinten für ZHN	201105000	9999999999999
620	067644	Hot plate support front for ZHN066, VestoWIN Premium 200-202	201105000	9999999999999
630	048025	de: Herdrahmen links VEP200 ab SN: 105001	201105000	9999999999999
640	047890	Wood drawer complete VEP	201105000	9999999999999
640	066451	Wood chest for ZHN, VestoWIN Premium 200-202	201105000	9999999999999
650	046554	Wood chest liner for VestoWIN Premium 200-202	201105000	9999999999999
655	047901	Insulationplate oven for VestoWIN Premium 200-202	201105000	9999999999999
656	048047	Insulation cover hood 400x53x19 for VestoWIN Premium 200-202	201105000	9999999999999
657	048048	Insulation cover hood top 520x75x19 for VestoWIN Premium 200-202	201105000	9999999999999
660	067091	Insolate sheet for ZHN	201105000	9999999999999
665	048049	Insulation sealing ledge 480x40x19 for VestoWIN Premium 200-202	201105000	9999999999999
670	063622	Insulation gasket cover for VestoWIN Premium 200-202	201105000	9999999999999

Item no.	Article no.	Description	Serialnumber from	Serialnumber t
680	003273	Heating door insulation 225x153x50 for VestoWIN Premium 200-202	201105000	9999999999999
690	066923	Insolate sidewall 520X470X1/2" VEP	201105000	9999999999999
695	048051	Insulation jet protection plate 465x120x13 for VestoWIN Premium 200-202	201105000	9999999999999
700	081159	Boiler insulation rear 400 x 220 x 20mm for VestoWIN Premium 200-202	201105000	9999999999999
710	003274	Boiler insulation side 380x220x20 for VestoWIN Premium 200-202, VestoWIN Klassik 170-220	201105000	9999999999999
720	003270	Boiler insulation front left 220x75x20 for VestoWIN Premium 200-202, VestoWIN Klassik 170-220	201105000	9999999999999
730	003271	Boiler insulation front right 220x75x20 for VestoWIN Premium 200-202, VestoWIN Klassik 170-220	201105000	9999999999999
740	004193	Insolate rear wall 493x485x1" ZHN,VEP	201105000	9999999999999
750	066826	de: Isolierwand hinten ZHN160/210,VEP200 bis SN: 104999	201105000	9999999999999
760	066893	de: Isolierwand seitlich für ZHN160/210,VEP200	201105000	9999999999999
770	004057	Knob no.30.298-002-001 for ZHN,FKV,VestoWIN Klassik 170-220, VestoWIN Premium 200-202	201105000	9999999999999
780	012513	Knee no.95T 5/4“ for KSN, VestoWIN Premium 200-202, VestoWIN Klassik 170-220	201105000	9999999999999
790	023906	Throttle flap button (D10x15) for KSN,ZHN,VestoWIN Klassik 170-220, VestoWIN Premium 200-202	201105000	9999999999999
800	004901	Wheel for wood drawer	201105000	9999999999999
810	047084	Baking tray for ZHL,ZHN,VestoWIN Premium 200-202	201105000	9999999999999
820	085146	Crank for vibration device and grate lifting equipment for KSN,ZHN,VestoWIN Klassik 170-220	201105000	9999999999999
830	005111	Heating surface cleaning bearing block for FireWIN, VestoWIN Klassik 170-220, VarioWIN, VestoWIN Premium 200-202	201105000	9999999999999
840	031119	4.8x16 raised countersunk head screw, DIN 7983 for VestoWIN Premium 200-202	201105000	9999999999999
850	018198	4.8x22 raised countersunk head screw for VestoWIN Premium 200-202	201105000	9999999999999
860	020095	M5x16 TT raised countersunk head screw, DIN 7500ME for VestoWIN Premium 200-202, VestoWIN Klassik 170-220	201105000	9999999999999
870	046824	Air choke for VestoWIN Premium 200-202, VestoWIN Klassik 170-220	201105000	9999999999999
872	048906	Retro fittings L-bracket	201105000	9999999999999
880	075752	Wall support for KSL25,ZHL,KSN250,ZHN18/21,VestoWIN Klassik 220, VestoWIN Premium 200-202	201105000	9999999999999
890	010421	KSN100 Thermostat minimal 716 RU-9289 0-95 Grades for FK,GWX,KSN,ZHN,GSX,ETX,SNX,FKX,VestoWIN Klassik 170-220, VestoWIN Premium 20	201105000	9999999999999
900	060558	Nut for lifting equipment rear for ZHN210/212,KSN160/200/150,VestoWIN Klassik 170, VestoWIN Premium 200-202	201105000	9999999999999
910	081485	Nut for lifting equipment front for ZHN210/212,KSN160/200/150,VestoWIN Klassik 170, VestoWIN Premium 200-202	201105000	9999999999999
915	016659	Hexagon nut M8 DIN434	201105000	9999999999999
920	017949	6x24 locating dowel pin, DIN 1472 for PMX,FKX,KSN,VEP200-202	201105000	9999999999999
930	021598	M6x30 locating dowel pin, DIN 1472 for KSN,ZHN,VestoWIN Klassik 170-220, VestoWIN Premium 200-202	201105000	9999999999999
940	000299	Silicone buffer	201105000	9999999999999
950	047081	Cleaning door for VestoWIN Premium 200-202	201105000	9999999999999
955	048055	rear frame for VestoWIN Premium 200	201105000	9999999999999
957	048057	front frame for VestoWIN Premium 200-202	201105000	9999999999999
960	004065	KSN809 Knurled button for ZHN,KSN,VestoWIN Klassik 170-220, VestoWIN Premium 200-202, EasyWIN Klassik/Premium 180	201105000	9999999999999
970	047882	Flue gas guide plate VEP	201105000	9999999999999
970	067296	Flue gas baffle plate for ZHN, VestoWIN Premium 200-202	201105000	9999999999999
980	004014	KSN095 241 5/4“-1“ reduction nipple, black for KSN,ZHN,VestoWIN Klassik 170-220, VestoWIN Premium 200-202	201105000	9999999999999
990	000280	KSL194 Cleaning brush (680x80/57x40) for FKU,ZHN,KSN,ZHL,KS,FKX,VestoWIN Klassik 170-220, VestoWIN Premium 200-202	201105000	9999999999999
1000	503022	VESTO009 Stainless steel side flue cover plate	201105000	9999999999999
1010	066532	Pipe socket 150mm for ZHN210/212, VestoWIN Premium 200-202	201105000	9999999999999
1020	004779	Grate breadth=153 for VestoWIN 170, VestoWIN Premium 200-202	201105000	9999999999999
1030	046842	Grate support for VestoWIN Premium 200-202	201105000	9999999999999
1040	080292	KSN019 Grate support complete for ZHN,KSN160/200/150, VestoWIN Premium 200-202, VestoWIN Klassik 170	201105000	9999999999999
1050	066761	Rear wall for ZHN160/210,VestoWIN Premium 200	201105000	9999999999999
1060	072192	Scratcher	201105000	9999999999999
1070	046767	Vibration axle for VestoWIN Premium 200-202, VestoWIN Klassik 170-220	201105000	9999999999999
1080	046847	Ash door protection plate for VestoWIN Klassik 170, VestoWIN Premium 200-202	201105000	9999999999999
1090	046855	Heating door protection plate for VestoWIN Premium 200-202	201105000	9999999999999
1100	067911	Flue protection plate for ZHN, VestoWIN Premium 200-202	201105000	9999999999999
1110	031549	Hexagon screw M6x12 DIN 7500	201105000	9999999999999
1120	049562	Side panel left signal white VEK170-220,VEP200-202,VESTO200	201105000	9999999999999

Item no.	Article no.	Description	Serialnumber from	Serialnumber t
1120	049564	Side panel left / grey	201105000	9999999999999
1120	051361	de: Seitenwand links schwarzgrau inkl. Blindscheibe für VestoWIN und Vesto200	201105000	9999999999999
1120	051362	de: Seitenwand links signalweiß inkl. Blindscheibe für VestoWIN und Vesto200	201105000	9999999999999
1130	049563	Side panel right / white	201105000	9999999999999
1130	049566	Side panel right / grey	201105000	9999999999999
1130	051363	de: Seitenwand rechts schwarzgrau inkl. Blindscheibe für VestoWIN und Vesto200	201105000	9999999999999
1130	051364	de: Seitenwand rechts signalweiß inkl. Blindscheibe für VestoWIN und Vesto200	201105000	9999999999999
1140	046736	Secondary air tube for VestoWIN Klassik 170-220, VestoWIN Premium 200-202	201105000	9999999999999
1150	046562	Base for VestoWIN Premium 200	201105000	9999999999999
1160	080470	Base plate 381 X 364 X 0,9 for VestoWIN Klassik 170, VestoWIN Premium 200-202	201105000	9999999999999
1165	018666	Clamping pin DIN 1481 - Ø4x20, for 3-way changeover unit for PMX, VarioWIN (* not illustrated), VestoWIN Premium 200-202, VestoWIN	201105000	9999999999999
1170	046754	Plug-in hinge left for VestoWIN Premium 200-202	201105000	9999999999999
1180	046755	Plug-in hinge right for VestoWIN Premium 200-202	201105000	9999999999999
1190	007108	Vertical grate (226mm) for VestoWIN Klassik 170, VestoWIN Premium 200-202	201105000	9999999999999
1195	047916	Rod heating flap for VestoWIN Premium 200-202, VestoWIN Klassik 170-220	201105000	9999999999999
1200	072222	Poker (D9x750) for KSL,ZHL,ZHN,KSN,VestoWIN Klassik 170-220, VestoWIN Premium 200-202	201105000	9999999999999
1205	047895	Jet protection plate for VestoWIN Premium 200-202	201105000	9999999999999
1210	004197	KSN094 WAF Plug no.290 5/4" for ZHN,KSN,Vesto WIN Klassik 170-220, VestoWIN Premium 200-202	201105000	9999999999999
1215	005452	OK-915 Immersion sleeve (129 mm) No.55501.04 for EKX,OK/E,GWX,KSN,ZHN,OK-915,ETX,SNX,FKX,MIRA,FireWIN,VestoWIN Klassik 170-220,	201105000	9999999999999
1220	004049	KSN027 Thermometer Z.Nr.SK 2014 IFC 52-052 KRF for ZHN,OEX,KSN,ASN,NBE,VestoWIN Premium 200-202, VestoWIN Klassik 170-220, fitting	201105000	9999999999999
1230	054003	de: Glasscheibe inkl. Thermometer für Backrohrtüre ZHN und VEP bis 01/2014	201105000	9999999999999
1250	047878	de: Trennwand Iso.-Wand Backrohr	201105000	9999999999999
1250	067199	Oven dividing/insulating wall for VestoWIN Premium 200-202	201105000	9999999999999
1260	047904	Top dividing wall VEP	201105000	9999999999999
1260	067040	Dividing wall top for ZHN160/210,VestoWIN Premium 200	201105000	9999999999999
1270	047879	Seperating plate	201105000	9999999999999
1270	067180	Dividing wall between boiler and oven for ZHN, VestoWIN Premium 200-202	201105000	9999999999999
1280	061840	KSN022 Door catch for KSN,ZHN,PMX, VestoWIN Premium 200-202, VestoWIN Klassik 170-220	201105000	9999999999999
1290	004413	KSN099 Union nut no.374 5/4“ for VestoWIN Premium 200-202, VestoWIN Klassik 170-220	201105000	9999999999999
1300	047535	Bolt holder for VestoWIN Klassik 170 from batch 2, VestoWIN Klassik 220 from batch 4, VestoWIN Premium 200-202 from batch 3	201105000	9999999999999
1305	047926	Bell crank for VestoWIN Premium 200-202	201105000	9999999999999
1310	046861	Screw connection plate for VestoWIN Premium 200-202	201105000	9999999999999
1320	079685	Adjustment foot for VestoWIN Premium 200-202, VestoWIN Klassik 170-220	201105000	9999999999999
1325	047873	Complete pullout for VestoWIN Premium 200-202	201105000	9999999999999
1330	047080	Oven front wall for VestoWIN Premium 200 to batch 4	201105000	9999999999999
1340	067679	Wall end plate (105x108x1,25) for ZHN210, VestoWIN Premium 200	201105000	9999999999999
1350	066567	KSN9492 Throttle flap shaft for KSN210/250,ZHN18/21,VestoWIN Klassik 170-220, VestoWIN Premium 200-202	201105000	9999999999999
1360	004006	KSN097 Bracket no.92 3/8“ for ZHN,KSN,VestoWIN Klassik 170-220, VestoWIN Premium 200-202	201105000	9999999999999
1370	017884	Cylinder screw M5x12 TT, DIN 7500C for VestoWIN Premium 200-202	201105000	9999999999999

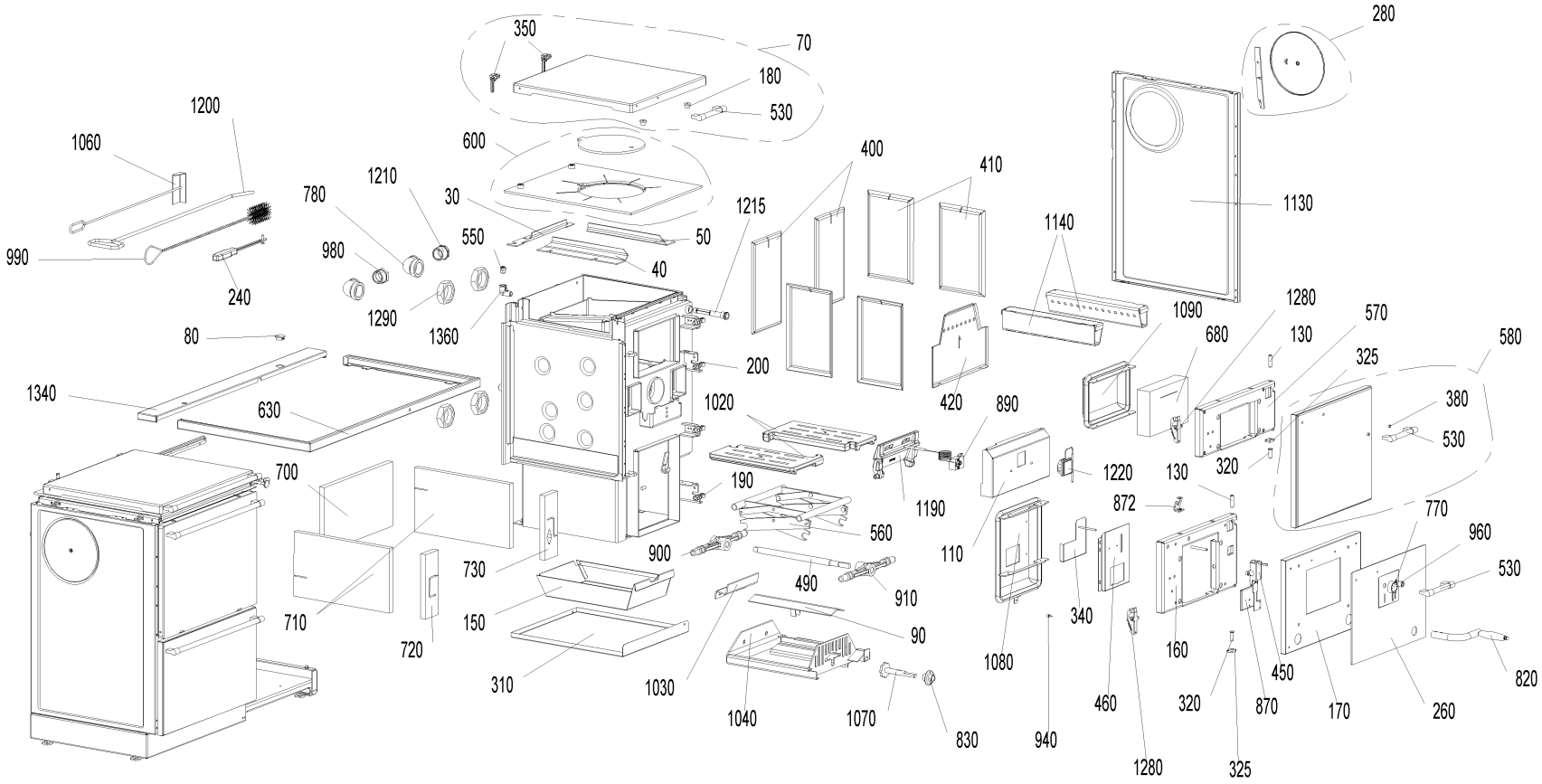
350
70
180
530
280
1200
1060
600
400
410
1130
780
1210
30
1215
1140
990
980
550
50
40
240
1290
1360
1090
1280
570
80
680
130
580
200
325
1340
630
1020
420
890
380
530
700
190
1220
130
320
1190
872
770
560
960
730
900
110
530
490
910
710
150
340
90
720
1080
160
450
820
310
1030
460
320
870
170
260
1040
1070
830
940
1280
325

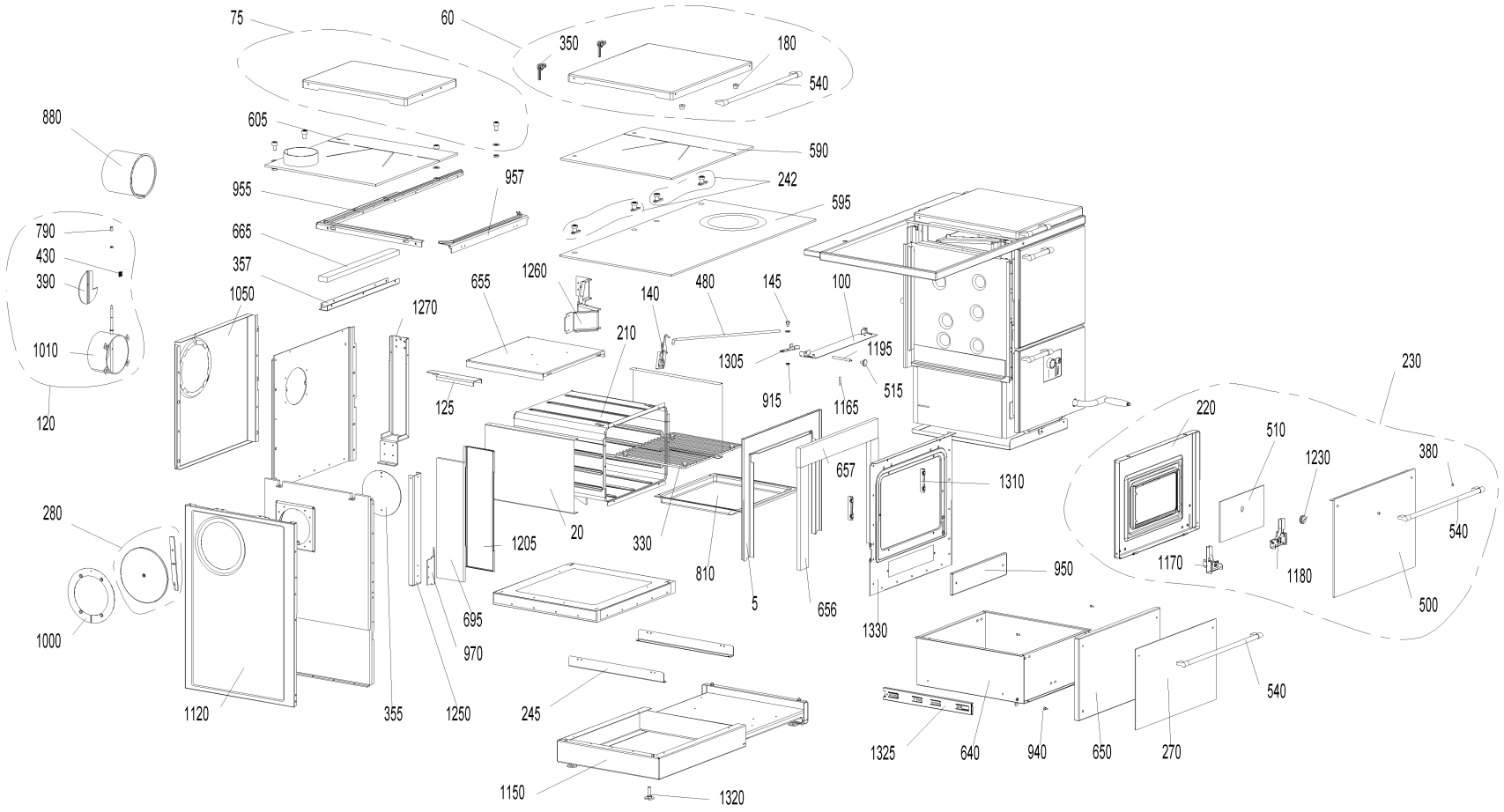
75
60
350
180
540
880
605
590
242
955
957
595
790
430
390
665
357
1050
1260
655
140
480
145
100
1270
210
1195
1010
1305
515
915
1165
125
120
230
220
510
1230
380
657
1310
280
20
1205
330
810
540
1170
1180
950
5
656
1330
500
1000
695
970
1120
355
1250
245
540
1325
640
940
650
270
1150
1320

Item no.	Article no.	Description	Serialnumber from	Serialnumber t
5	047877	Oven cover plate inside for VestoWIN Premium 200 - 202	201105000	9999999999999
10	075450	de: Isolierblech hinten Backrohr ZHN (405X126X1-1,25)	201105000	9999999999999
20	075442	Oven cover plate side for VestoWIN Premium 200-202	201105000	9999999999999
30	046864	Rear cover plate for VestoWIN KLassik 200-202, VestoWIN Klassik 170	201105000	9999999999999
40	046937	Cover plate left for VestoWIN Premium 200-202, VestoWIN Klassik 170	201105000	9999999999999
50	046938	Cover plate right for VestoWIN Premium 200-202, VestoWIN Klassik 170	201105000	9999999999999
60	047012	Oven cover hood black/grey for VestoWIN Premium 200-202	201105000	9999999999999
60	047013	Oven cover hood signal white for VestoWIN Premium 200-202	201105000	9999999999999
60	048595	VEP Isulation cover black	201105000	9999999999999
60	048596	VEP Isulation cover white	201105000	9999999999999
70	047017	Boiler cover hood black/grey for VestoWIN Premium 200, VestoWIN Klassik 170	201105000	9999999999999
70	047018	Boiler cover hood signal white for VestoWIN Premium 200	201105000	9999999999999
70	048599	VEP Isulation cover grey	201105000	9999999999999
70	048600	VEP200 Isulation cover	201105000	9999999999999
75	048169	flue tube - cover hood top signal white for VestoWIN Premium 200-202	201105000	9999999999999
75	048170	flue tube - cover hood top black/grey for VestoWIN Premium 200-202	201105000	9999999999999
80	004995	Cover for HMX, PMX, VestoWIN Premium 200-202, VestoWIN Klassik 170-220	201105000	9999999999999
90	081582	Cover for threaded spindle for KSN,ZHN,VestoWIN Klassik 170-220	201105000	9999999999999
100	075574	Oven frame cover for VestoWIN Premium 200-202	201105000	9999999999999
110	046843	Thermostat cover for VestoWIN Premium 200-202, VestoWIN Klassik 170	201105000	9999999999999
120	085472	Flue outlet with throttle flap for VestoWIN Premium 200-202	201105000	9999999999999
125	047881	spacer ledge for VestoWIN Premium 200	201105000	9999999999999
130	010019	Door mounting axle for VestoWIN Klassik 170-220, VestoWIN Premium 200-202	201105000	9999999999999
140	047906	Heating flap VEP	201105000	9999999999999
140	067121	Heating flap for ZHL,ZHN,VestoWIN Premium 200-202 ZHN036	201105000	9999999999999
145	012502	Collar screw	201105000	9999999999999
150	046839	Ash pan for VestoWIN Klassik 170, VestoWIN Premium 200-202	201105000	9999999999999
160	046852	Ash door plate for VestoWIN Premium 200	201105000	9999999999999
170	046850	Ash door liner for VestoWIN Klassik 170, VestoWIN Premium 200-202	201105000	9999999999999
180	023922	Insulating cover support Ø20x15mm for KSN/ZHN,VestoWIN Klassik 170-220, VestoWIN Premium 200-202	201105000	9999999999999
190	033436	M10x40 eyebolt, DIN 444 for VestoWIN Premium 200-202	201105000	9999999999999
200	033432	Eyebolt similar to DIN 444 - B M10x50 - 4.6 - bright for VarioWIN, FireWIN, VestoWIN Premium 200-202, VestoWIN Klassik 170-220	201105000	9999999999999
210	050301	Oven set for ZHN	201105000	9999999999999
220	047079	Oven door for VestoWIN Premium 200-202	201105000	9999999999999
230	046920	Oven door complete signal white for VestoWIN Premium 200-202	201105000	9999999999999
230	046936	Oven door complete black/grey for VestoWIN Premium 200-202	201105000	9999999999999
240	073407	Operating handle for FKV,KSL,ZHL,FKN,FAX,ZHN,KSN,FKH,HMX,VestoWIN Premium 200-202, VestoWIN Klassik 170-220	201105000	9999999999999
242	048603	Fastening set	201105000	9999999999999
245	047887	mounting bracket - complete pullout for VestoWIN Premium 200-202	201105000	9999999999999
250	018139	Cylinder screw 4.2x13 DIN7981SP (not illustrated)	201105000	9999999999999
260	046929	VESTO1 Ash door cover signal white for VestoWIN Premium 200	201105000	9999999999999
260	046930	Ash door cover brown for VestoWIN Premium 200	201105000	9999999999999
260	046959	Ash door cover stainless steel for VestoWIN Premium 200	201105000	9999999999999
270	046924	VESTO2 Wood chest cover signal white for VestoWIN Premium 200-202	201105000	9999999999999
270	046925	VESTO4 Wood chest cover brown for VestoWIN Premium 200-202	201105000	9999999999999
270	046957	Wood chest cover stainless steel for VestoWIN Premium 200-202	201105000	9999999999999
280	047003	Dummy washer black/grey for VestoWIN Klassik 170-220, Vesto WIN Premium 200-202	201105000	9999999999999
280	047004	Dummy washer signal white for VestoWIN Klassik 170-220, VestoWIN Premium 200-202	201105000	9999999999999
290	066834	Buttom for ZHN,VEP	201105000	9999999999999
300	066842	Bottom for ZHN,VEP	201105000	9999999999999
310	080500	Ground tray (498x416x0,9) for ZHN,KSN150/160/200, VestoWIN Premium 200-202, VestoWIN Klassik 170	201105000	9999999999999

Item no.	Article no.	Description	Serialnumber from	Serialnumber t
320	010018	Ø10x30 bolt, DIN1434 for VestoWIN Klassik 170-220, VestoWIN Premium 200-202	201105000	9999999999999
325	047535	Bolt holder for VestoWIN Klassik 170 from batch 2, VestoWIN Klassik 220 from batch 4, VestoWIN Premium 200-202 from batch 3	201105000	9999999999999
330	003174	Grid iron for ZHN, VestoWIN Premium 200-202	201105000	9999999999999
340	046821	Fuel economy slider for VestoWIN Premium 200-202, VestoWIN Klassik 170-220	201105000	9999999999999
350	049885	Hinge for top (galvanised)	201105000	9999999999999
355	048044	Cover disc for VestoWIN Premium 200-202	201105000	9999999999999
357	048043	Sealing ledge for VestoWIN Premium 200-202	201105000	9999999999999
360	046999	Ash/heating door rope seal for VestoWIN Premium 200-202, VestoWIN Klassik 170-220	201105000	9999999999999
370	047011	Hot plate rope seal for VestoWIN Premium 200-202	201105000	9999999999999
380	010020	Spacer sleeve for VestoWIN Klassik 170-220, VestoWIN Premium 200-202	201105000	9999999999999
390	068101	Throttle flap for KSN 250,ZHN18/21,KSN949, VestoWIN Premium 200-202	201105000	9999999999999
400	046840	Rear hook-in plate for VestoWIN Klassik 170, VestoWIN Premium 200-202	201105000	9999999999999
410	046732	Hook-in plate left, right for VestoWIN Klassik 170-220, VestoWIN Premium 200-202	201105000	9999999999999
420	046841	Front hook-in plate for VestoWIN Klassik 170, VestoWIN Premium 200-202	201105000	9999999999999
430	004073	Throttle flap spring for VestoWIN Klassik 170-220, VestoWIN Premium 200-202	201105000	9999999999999
440	005959	Immersion sleeve spring for VestoWIN Premium 200-202, VestoWIN Klassik 170-220	201105000	9999999999999
450	004030	Combustion controlling mechanism for KSN,ZHN,FKV,VestoWIN Klassik 170-220, VestoWIN Premium 200-202	201105000	9999999999999
460	046848	Combustion controlling mechanism retaining plate for VestoWIN Klassik 170, VestoWIN Premium 200-202	201105000	9999999999999
470	019410	Wing nut M6	201105000	9999999999999
480	047905	Heating flap linkage	201105000	9999999999999
480	067326	Heating flap linkage for ZHN160/210, VestoWIN Premium 200	201105000	9999999999999
490	081213	Threaded spindle (Ø20x377) for KSN,ZHN,VestoWIN Klassik 170-220, VestoWIN Premium 200-202	201105000	9999999999999
500	046836	Glass oven signal white for VestoWIN Premium 200-202	201105000	9999999999999
500	046935	Glass oven black/grey for VestoWIN Premium 200-202	201105000	9999999999999
510	054003	de: Glasscheibe inkl. Thermometer für Backrohrtüre ZHN und VEP bis 01/2014	201105000	9999999999999
515	010029	Handle for VestoWIN Premium 200-202, VestoWIN Klassik 170-220	201105000	9999999999999
520	004928	Glass fibre cord 5/5mm for FireWIN, ZHN, VestoWIN Premium 200-202	201105000	9999999999999
530	010028	Handle 149 for VestoWIN Premium 200-202, fittings room Vesto 200	201105000	9999999999999
540	010027	Handle 519 for VestoWIN Premium 200-202	201105000	9999999999999
545	012688	de: Haltering mit Kappe UN 9318 verchromt ZHN	201105000	9999999999999
550	004863	Manually operated bleeder VFR 3/8" for ZHN,KSN,GKW,NBE115,GKA/E,VestoWIN Klassik 170-220, VestoWIN Premium 200-202	201105000	9999999999999
560	080675	Lifting jack for ZHN,KSN160/200/150, VestoWIN Premium 200-202, VestoWIN Klassik 170	201105000	9999999999999
570	046859	Heating door plate for VestoWIN Premium 200	201105000	9999999999999
580	046919	Heating door signal white for VestoWIN Premium 200	201105000	9999999999999
580	046934	Heating door black/grey for VestoWIN Premium 200	201105000	9999999999999
590	004618	Oven hot plate (547x505x7mm) for ZHN160/180/210, VestoWIN Premium 200	201105000	9999999999999
595	016252	Ceran hob 200 VEP	201105000	9999999999999
600	004081	Boiler hot plate (418x505x7mm) for KSN160/200/150,ZHN18/21, VestoWIN Premium 200-202, VestoWIN Klassik 170	201105000	9999999999999
605	048171	Hot plate - flue tube top for VestoWIN Premium 200	201105000	9999999999999
610	067598	de: Herdplattenauflage hinten für ZHN	201105000	9999999999999
620	067644	Hot plate support front for ZHN066, VestoWIN Premium 200-202	201105000	9999999999999
630	048025	de: Herdrahmen links VEP200 ab SN: 105001	201105000	9999999999999
640	047890	Wood drawer complete VEP	201105000	9999999999999
640	066451	Wood chest for ZHN, VestoWIN Premium 200-202	201105000	9999999999999
650	046554	Wood chest liner for VestoWIN Premium 200-202	201105000	9999999999999
655	047901	Insulationplate oven for VestoWIN Premium 200-202	201105000	9999999999999
656	048047	Insulation cover hood 400x53x19 for VestoWIN Premium 200-202	201105000	9999999999999
657	048048	Insulation cover hood top 520x75x19 for VestoWIN Premium 200-202	201105000	9999999999999
660	067091	Insolate sheet for ZHN	201105000	9999999999999
665	048049	Insulation sealing ledge 480x40x19 for VestoWIN Premium 200-202	201105000	9999999999999
670	063622	Insulation gasket cover for VestoWIN Premium 200-202	201105000	9999999999999

Item no.	Article no.	Description	Serialnumber from	Serialnumber t
680	003273	Heating door insulation 225x153x50 for VestoWIN Premium 200-202	201105000	9999999999999
690	066923	Insolate sidewall 520X470X1/2" VEP	201105000	9999999999999
695	048051	Insulation jet protection plate 465x120x13 for VestoWIN Premium 200-202	201105000	9999999999999
700	081159	Boiler insulation rear 400 x 220 x 20mm for VestoWIN Premium 200-202	201105000	9999999999999
710	003274	Boiler insulation side 380x220x20 for VestoWIN Premium 200-202, VestoWIN Klassik 170-220	201105000	9999999999999
720	003270	Boiler insulation front left 220x75x20 for VestoWIN Premium 200-202, VestoWIN Klassik 170-220	201105000	9999999999999
730	003271	Boiler insulation front right 220x75x20 for VestoWIN Premium 200-202, VestoWIN Klassik 170-220	201105000	9999999999999
740	004193	Insolate rear wall 493x485x1" ZHN,VEP	201105000	9999999999999
750	066826	de: Isolierwand hinten ZHN160/210,VEP200 bis SN: 104999	201105000	9999999999999
760	066893	de: Isolierwand seitlich für ZHN160/210,VEP200	201105000	9999999999999
770	004057	Knob no.30.298-002-001 for ZHN,FKV,VestoWIN Klassik 170-220, VestoWIN Premium 200-202	201105000	9999999999999
780	012513	Knee no.95T 5/4“ for KSN, VestoWIN Premium 200-202, VestoWIN Klassik 170-220	201105000	9999999999999
790	023906	Throttle flap button (D10x15) for KSN,ZHN,VestoWIN Klassik 170-220, VestoWIN Premium 200-202	201105000	9999999999999
800	004901	Wheel for wood drawer	201105000	9999999999999
810	047084	Baking tray for ZHL,ZHN,VestoWIN Premium 200-202	201105000	9999999999999
820	085146	Crank for vibration device and grate lifting equipment for KSN,ZHN,VestoWIN Klassik 170-220	201105000	9999999999999
830	005111	Heating surface cleaning bearing block for FireWIN, VestoWIN Klassik 170-220, VarioWIN, VestoWIN Premium 200-202	201105000	9999999999999
840	031119	4.8x16 raised countersunk head screw, DIN 7983 for VestoWIN Premium 200-202	201105000	9999999999999
850	018198	4.8x22 raised countersunk head screw for VestoWIN Premium 200-202	201105000	9999999999999
860	020095	M5x16 TT raised countersunk head screw, DIN 7500ME for VestoWIN Premium 200-202, VestoWIN Klassik 170-220	201105000	9999999999999
870	046824	Air choke for VestoWIN Premium 200-202, VestoWIN Klassik 170-220	201105000	9999999999999
872	048906	Retro fittings L-bracket	201105000	9999999999999
880	075752	Wall support for KSL25,ZHL,KSN250,ZHN18/21,VestoWIN Klassik 220, VestoWIN Premium 200-202	201105000	9999999999999
890	010421	KSN100 Thermostat minimal 716 RU-9289 0-95 Grades for FK,GWX,KSN,ZHN,GSX,ETX,SNX,FKX,VestoWIN Klassik 170-220, VestoWIN Premium 20	201105000	9999999999999
900	060558	Nut for lifting equipment rear for ZHN210/212,KSN160/200/150,VestoWIN Klassik 170, VestoWIN Premium 200-202	201105000	9999999999999
910	081485	Nut for lifting equipment front for ZHN210/212,KSN160/200/150,VestoWIN Klassik 170, VestoWIN Premium 200-202	201105000	9999999999999
915	016659	Hexagon nut M8 DIN434	201105000	9999999999999
920	017949	6x24 locating dowel pin, DIN 1472 for PMX,FKX,KSN,VEP200-202	201105000	9999999999999
930	021598	M6x30 locating dowel pin, DIN 1472 for KSN,ZHN,VestoWIN Klassik 170-220, VestoWIN Premium 200-202	201105000	9999999999999
940	000299	Silicone buffer	201105000	9999999999999
950	047081	Cleaning door for VestoWIN Premium 200-202	201105000	9999999999999
955	048055	rear frame for VestoWIN Premium 200	201105000	9999999999999
957	048057	front frame for VestoWIN Premium 200-202	201105000	9999999999999
960	004065	KSN809 Knurled button for ZHN,KSN,VestoWIN Klassik 170-220, VestoWIN Premium 200-202, EasyWIN Klassik/Premium 180	201105000	9999999999999
970	047882	Flue gas guide plate VEP	201105000	9999999999999
970	067296	Flue gas baffle plate for ZHN, VestoWIN Premium 200-202	201105000	9999999999999
980	004014	KSN095 241 5/4“-1“ reduction nipple, black for KSN,ZHN,VestoWIN Klassik 170-220, VestoWIN Premium 200-202	201105000	9999999999999
990	000280	KSL194 Cleaning brush (680x80/57x40) for FKU,ZHN,KSN,ZHL,KS,FKX,VestoWIN Klassik 170-220, VestoWIN Premium 200-202	201105000	9999999999999
1000	503022	VESTO009 Stainless steel side flue cover plate	201105000	9999999999999
1010	066532	Pipe socket 150mm for ZHN210/212, VestoWIN Premium 200-202	201105000	9999999999999
1020	004779	Grate breadth=153 for VestoWIN 170, VestoWIN Premium 200-202	201105000	9999999999999
1030	046842	Grate support for VestoWIN Premium 200-202	201105000	9999999999999
1040	080292	KSN019 Grate support complete for ZHN,KSN160/200/150, VestoWIN Premium 200-202, VestoWIN Klassik 170	201105000	9999999999999
1050	066761	Rear wall for ZHN160/210,VestoWIN Premium 200	201105000	9999999999999
1060	072192	Scratcher	201105000	9999999999999
1070	046767	Vibration axle for VestoWIN Premium 200-202, VestoWIN Klassik 170-220	201105000	9999999999999
1080	046847	Ash door protection plate for VestoWIN Klassik 170, VestoWIN Premium 200-202	201105000	9999999999999
1090	046855	Heating door protection plate for VestoWIN Premium 200-202	201105000	9999999999999
1100	067911	Flue protection plate for ZHN, VestoWIN Premium 200-202	201105000	9999999999999
1110	031549	Hexagon screw M6x12 DIN 7500	201105000	9999999999999
1120	049562	Side panel left signal white VEK170-220,VEP200-202,VESTO200	201105000	9999999999999

Item no.	Article no.	Description	Serialnumber from	Serialnumber t
1120	049564	Side panel left / grey	201105000	9999999999999
1120	051361	de: Seitenwand links schwarzgrau inkl. Blindscheibe für VestoWIN und Vesto200	201105000	9999999999999
1120	051362	de: Seitenwand links signalweiß inkl. Blindscheibe für VestoWIN und Vesto200	201105000	9999999999999
1130	049563	Side panel right / white	201105000	9999999999999
1130	049566	Side panel right / grey	201105000	9999999999999
1130	051363	de: Seitenwand rechts schwarzgrau inkl. Blindscheibe für VestoWIN und Vesto200	201105000	9999999999999
1130	051364	de: Seitenwand rechts signalweiß inkl. Blindscheibe für VestoWIN und Vesto200	201105000	9999999999999
1140	046736	Secondary air tube for VestoWIN Klassik 170-220, VestoWIN Premium 200-202	201105000	9999999999999
1150	046562	Base for VestoWIN Premium 200	201105000	9999999999999
1160	080470	Base plate 381 X 364 X 0,9 for VestoWIN Klassik 170, VestoWIN Premium 200-202	201105000	9999999999999
1165	018666	Clamping pin DIN 1481 - Ø4x20, for 3-way changeover unit for PMX, VarioWIN (* not illustrated), VestoWIN Premium 200-202, VestoWIN	201105000	9999999999999
1170	046754	Plug-in hinge left for VestoWIN Premium 200-202	201105000	9999999999999
1180	046755	Plug-in hinge right for VestoWIN Premium 200-202	201105000	9999999999999
1190	007108	Vertical grate (226mm) for VestoWIN Klassik 170, VestoWIN Premium 200-202	201105000	9999999999999
1195	047916	Rod heating flap for VestoWIN Premium 200-202, VestoWIN Klassik 170-220	201105000	9999999999999
1200	072222	Poker (D9x750) for KSL,ZHL,ZHN,KSN,VestoWIN Klassik 170-220, VestoWIN Premium 200-202	201105000	9999999999999
1205	047895	Jet protection plate for VestoWIN Premium 200-202	201105000	9999999999999
1210	004197	KSN094 WAF Plug no.290 5/4" for ZHN,KSN,Vesto WIN Klassik 170-220, VestoWIN Premium 200-202	201105000	9999999999999
1215	005452	OK-915 Immersion sleeve (129 mm) No.55501.04 for EKX,OK/E,GWX,KSN,ZHN,OK-915,ETX,SNX,FKX,MIRA,FireWIN,VestoWIN Klassik 170-220,	201105000	9999999999999
1220	004049	KSN027 Thermometer Z.Nr.SK 2014 IFC 52-052 KRF for ZHN,OEX,KSN,ASN,NBE,VestoWIN Premium 200-202, VestoWIN Klassik 170-220, fitting	201105000	9999999999999
1230	054003	de: Glasscheibe inkl. Thermometer für Backrohrtüre ZHN und VEP bis 01/2014	201105000	9999999999999
1250	047878	de: Trennwand Iso.-Wand Backrohr	201105000	9999999999999
1250	067199	Oven dividing/insulating wall for VestoWIN Premium 200-202	201105000	9999999999999
1260	047904	Top dividing wall VEP	201105000	9999999999999
1260	067040	Dividing wall top for ZHN160/210,VestoWIN Premium 200	201105000	9999999999999
1270	047879	Seperating plate	201105000	9999999999999
1270	067180	Dividing wall between boiler and oven for ZHN, VestoWIN Premium 200-202	201105000	9999999999999
1280	061840	KSN022 Door catch for KSN,ZHN,PMX, VestoWIN Premium 200-202, VestoWIN Klassik 170-220	201105000	9999999999999
1290	004413	KSN099 Union nut no.374 5/4“ for VestoWIN Premium 200-202, VestoWIN Klassik 170-220	201105000	9999999999999
1300	047535	Bolt holder for VestoWIN Klassik 170 from batch 2, VestoWIN Klassik 220 from batch 4, VestoWIN Premium 200-202 from batch 3	201105000	9999999999999
1305	047926	Bell crank for VestoWIN Premium 200-202	201105000	9999999999999
1310	046861	Screw connection plate for VestoWIN Premium 200-202	201105000	9999999999999
1320	079685	Adjustment foot for VestoWIN Premium 200-202, VestoWIN Klassik 170-220	201105000	9999999999999
1325	047873	Complete pullout for VestoWIN Premium 200-202	201105000	9999999999999
1330	047080	Oven front wall for VestoWIN Premium 200 to batch 4	201105000	9999999999999
1340	067679	Wall end plate (105x108x1,25) for ZHN210, VestoWIN Premium 200	201105000	9999999999999
1350	066567	KSN9492 Throttle flap shaft for KSN210/250,ZHN18/21,VestoWIN Klassik 170-220, VestoWIN Premium 200-202	201105000	9999999999999
1360	004006	KSN097 Bracket no.92 3/8“ for ZHN,KSN,VestoWIN Klassik 170-220, VestoWIN Premium 200-202	201105000	9999999999999
1370	017884	Cylinder screw M5x12 TT, DIN 7500C for VestoWIN Premium 200-202	201105000	9999999999999

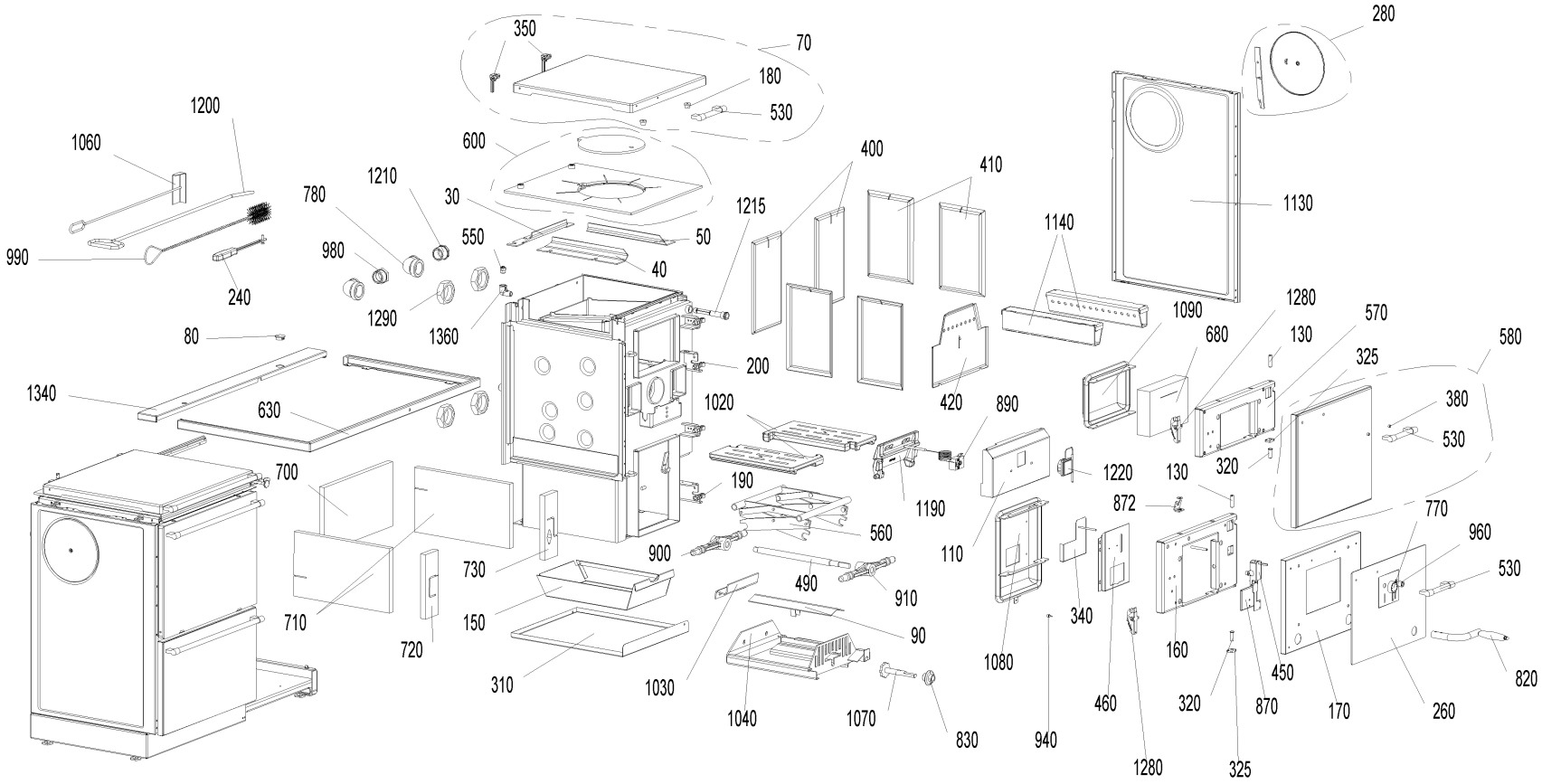
350
70
180
530
280
1200
1060
600
400
410
1130
780
1210
30
1215
1140
990
980
550
50
40
240
1290
1360
1090
1280
570
80
680
130
580
200
325
1340
630
1020
420
890
380
530
700
190
1220
130
320
1190
872
770
560
960
110
730
900
490
910
530
710
150
340
90
720
1080
160
450
820
310
1030
460
320
870
170
260
1040
1070
830
940
1280
325

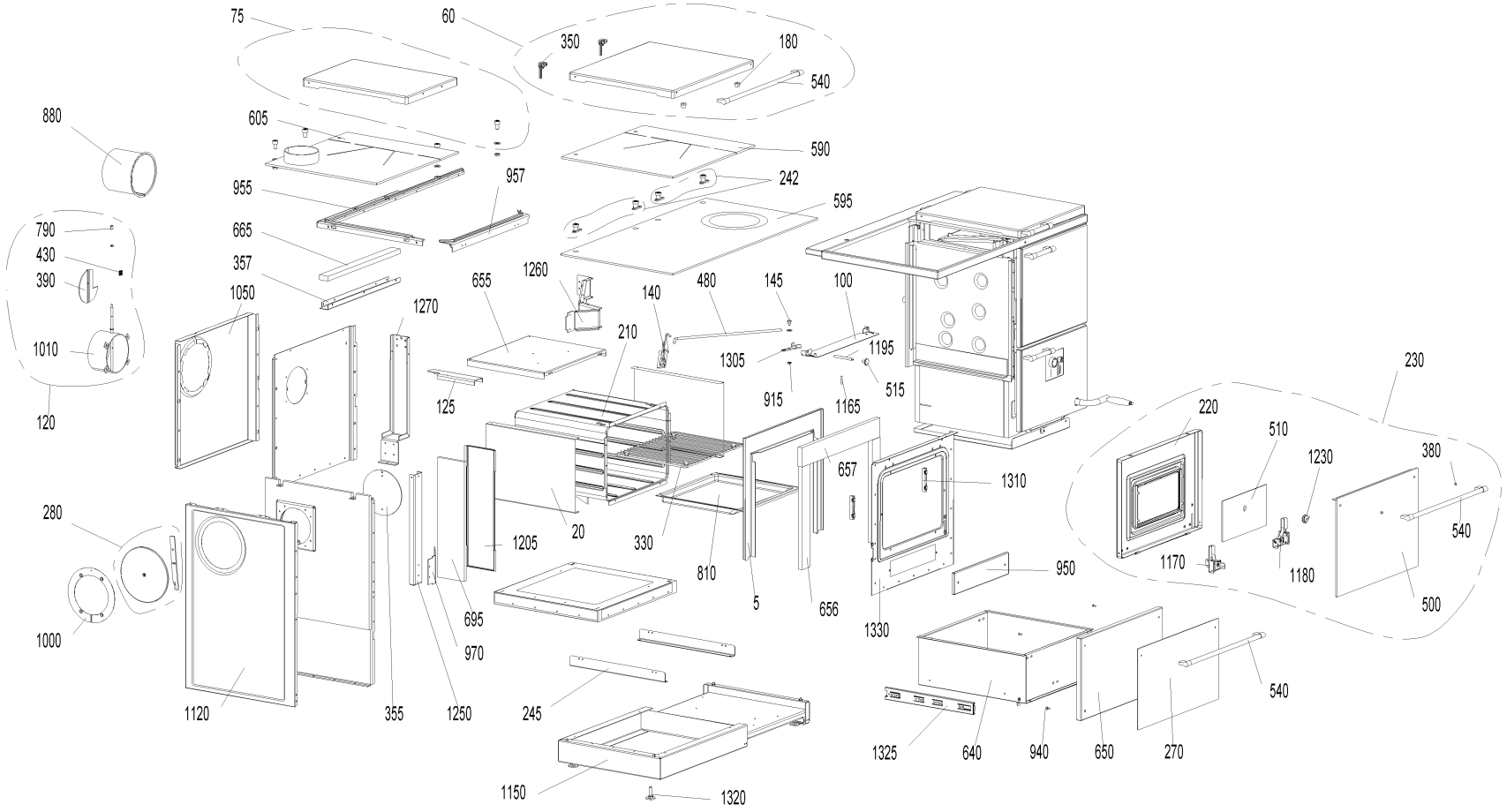
75
60
350
180
540
880
605
590
242
955
957
595
790
430
390
665
357
1050
1260
655
140
480
145
100
1270
210
1195
1010
1305
515
915
1165
125
120
230
220
510
1230
380
657
1310
280
20
1205
330
810
540
1170
1180
950
5
656
1330
500
1000
695
970
1120
355
1250
245
540
1325
640
940
650
270
1150
1320

Item no.	Article no.	Description	Serialnumber from	Serialnumber t
5	047877	Oven cover plate inside for VestoWIN Premium 200 - 202	201105000	9999999999999
10	075450	de: Isolierblech hinten Backrohr ZHN (405X126X1-1,25)	201105000	9999999999999
20	075442	Oven cover plate side for VestoWIN Premium 200-202	201105000	9999999999999
30	046864	Rear cover plate for VestoWIN KLassik 200-202, VestoWIN Klassik 170	201105000	9999999999999
40	046937	Cover plate left for VestoWIN Premium 200-202, VestoWIN Klassik 170	201105000	9999999999999
50	046938	Cover plate right for VestoWIN Premium 200-202, VestoWIN Klassik 170	201105000	9999999999999
60	047012	Oven cover hood black/grey for VestoWIN Premium 200-202	201105000	9999999999999
60	047013	Oven cover hood signal white for VestoWIN Premium 200-202	201105000	9999999999999
60	048595	VEP Isulation cover black	201105000	9999999999999
60	048596	VEP Isulation cover white	201105000	9999999999999
70	047014	Boiler cover hood black/grey for VestoWIN Premium 202	201105000	9999999999999
70	047016	Boiler cover hood signal white for VestoWIN Premium 202, VestoWIN Klassik 170	201105000	9999999999999
70	048601	VEP-VEK170 Isulation cover grey	201105000	9999999999999
70	048602	VEP-VEK170 Isulation cover white	201105000	9999999999999
75	048169	flue tube - cover hood top signal white for VestoWIN Premium 200-202	201105000	9999999999999
75	048170	flue tube - cover hood top black/grey for VestoWIN Premium 200-202	201105000	9999999999999
80	004995	Cover for HMX, PMX, VestoWIN Premium 200-202, VestoWIN Klassik 170-220	201105000	9999999999999
90	081582	Cover for threaded spindle for KSN,ZHN,VestoWIN Klassik 170-220	201105000	9999999999999
100	075574	Oven frame cover for VestoWIN Premium 200-202	201105000	9999999999999
110	046843	Thermostat cover for VestoWIN Premium 200-202, VestoWIN Klassik 170	201105000	9999999999999
120	085472	Flue outlet with throttle flap for VestoWIN Premium 200-202	201105000	9999999999999
125	048052	spacer ledge for VestoWIN Premium 202	201105000	9999999999999
130	010019	Door mounting axle for VestoWIN Klassik 170-220, VestoWIN Premium 200-202	201105000	9999999999999
140	047906	Heating flap VEP	201105000	9999999999999
140	067121	Heating flap for ZHL,ZHN,VestoWIN Premium 200-202 ZHN036	201105000	9999999999999
145	012502	Collar screw	201105000	9999999999999
150	046839	Ash pan for VestoWIN Klassik 170, VestoWIN Premium 200-202	201105000	9999999999999
160	046889	Ash door plate for VestoWIN Klassik 170, VestoWIN Premium 202	201105000	9999999999999
170	046850	Ash door liner for VestoWIN Klassik 170, VestoWIN Premium 200-202	201105000	9999999999999
180	023922	Insulating cover support Ø20x15mm for KSN/ZHN,VestoWIN Klassik 170-220, VestoWIN Premium 200-202	201105000	9999999999999
190	033432	Eyebolt similar to DIN 444 - B M10x50 - 4.6 - bright for VarioWIN, FireWIN, VestoWIN Premium 200-202, VestoWIN Klassik 170-220	201105000	9999999999999
200	033432	Eyebolt similar to DIN 444 - B M10x50 - 4.6 - bright for VarioWIN, FireWIN, VestoWIN Premium 200-202, VestoWIN Klassik 170-220	201105000	9999999999999
210	050301	Oven set for ZHN	201105000	9999999999999
220	047079	Oven door for VestoWIN Premium 200-202	201105000	9999999999999
230	046920	Oven door complete signal white for VestoWIN Premium 200-202	201105000	9999999999999
230	046936	Oven door complete black/grey for VestoWIN Premium 200-202	201105000	9999999999999
240	073407	Operating handle for FKV,KSL,ZHL,FKN,FAX,ZHN,KSN,FKH,HMX,VestoWIN Premium 200-202, VestoWIN Klassik 170-220	201105000	9999999999999
242	048603	Fastening set	201105000	9999999999999
245	047887	mounting bracket - complete pullout for VestoWIN Premium 200-202	201105000	9999999999999
250	018139	Cylinder screw 4.2x13 DIN7981SP (not illustrated)	201105000	9999999999999
260	046927	VESTO001 Ash door cover signal white for VestoWIN Klassik 170	201105000	9999999999999
260	046931	VESTO002 Ash door cover brown for VestoWIN KLassik 170, VestoWIN Premium 202	201105000	9999999999999
260	046961	VESTO003 Ash door cover stainless steel for VestoWIN Klassik 170, VestoWIN Premium 202	201105000	9999999999999
270	046924	VESTO2 Wood chest cover signal white for VestoWIN Premium 200-202	201105000	9999999999999
270	046925	VESTO4 Wood chest cover brown for VestoWIN Premium 200-202	201105000	9999999999999
270	046957	Wood chest cover stainless steel for VestoWIN Premium 200-202	201105000	9999999999999
280	047003	Dummy washer black/grey for VestoWIN Klassik 170-220, Vesto WIN Premium 200-202	201105000	9999999999999
280	047004	Dummy washer signal white for VestoWIN Klassik 170-220, VestoWIN Premium 200-202	201105000	9999999999999
290	066834	Buttom for ZHN,VEP	201105000	9999999999999
300	066842	Bottom for ZHN,VEP	201105000	9999999999999
310	080500	Ground tray (498x416x0,9) for ZHN,KSN150/160/200, VestoWIN Premium 200-202, VestoWIN Klassik 170	201105000	9999999999999

Item no.	Article no.	Description	Serialnumber from	Serialnumber t
320	010018	Ø10x30 bolt, DIN1434 for VestoWIN Klassik 170-220, VestoWIN Premium 200-202	201105000	9999999999999
325	047535	Bolt holder for VestoWIN Klassik 170 from batch 2, VestoWIN Klassik 220 from batch 4, VestoWIN Premium 200-202 from batch 3	201105000	9999999999999
330	003174	Grid iron for ZHN, VestoWIN Premium 200-202	201105000	9999999999999
340	046821	Fuel economy slider for VestoWIN Premium 200-202, VestoWIN Klassik 170-220	201105000	9999999999999
350	049885	Hinge for top (galvanised)	201105000	9999999999999
355	048044	Cover disc for VestoWIN Premium 200-202	201105000	9999999999999
357	048043	Sealing ledge for VestoWIN Premium 200-202	201105000	9999999999999
360	046999	Ash/heating door rope seal for VestoWIN Premium 200-202, VestoWIN Klassik 170-220	201105000	9999999999999
370	047011	Hot plate rope seal for VestoWIN Premium 200-202	201105000	9999999999999
380	010020	Spacer sleeve for VestoWIN Klassik 170-220, VestoWIN Premium 200-202	201105000	9999999999999
390	068101	Throttle flap for KSN 250,ZHN18/21,KSN949, VestoWIN Premium 200-202	201105000	9999999999999
400	046840	Rear hook-in plate for VestoWIN Klassik 170, VestoWIN Premium 200-202	201105000	9999999999999
410	046732	Hook-in plate left, right for VestoWIN Klassik 170-220, VestoWIN Premium 200-202	201105000	9999999999999
420	046841	Front hook-in plate for VestoWIN Klassik 170, VestoWIN Premium 200-202	201105000	9999999999999
430	004073	Throttle flap spring for VestoWIN Klassik 170-220, VestoWIN Premium 200-202	201105000	9999999999999
440	005959	Immersion sleeve spring for VestoWIN Premium 200-202, VestoWIN Klassik 170-220	201105000	9999999999999
450	004030	Combustion controlling mechanism for KSN,ZHN,FKV,VestoWIN Klassik 170-220, VestoWIN Premium 200-202	201105000	9999999999999
460	046848	Combustion controlling mechanism retaining plate for VestoWIN Klassik 170, VestoWIN Premium 200-202	201105000	9999999999999
470	019410	Wing nut M6	201105000	9999999999999
480	047905	Heating flap linkage	201105000	9999999999999
480	067148	Heating flap linkage for ZHN162/212, ZHN0364, VestoWIN Premium 202	201105000	9999999999999
490	081213	Threaded spindle (Ø20x377) for KSN,ZHN,VestoWIN Klassik 170-220, VestoWIN Premium 200-202	201105000	9999999999999
500	046836	Glass oven signal white for VestoWIN Premium 200-202	201105000	9999999999999
500	046935	Glass oven black/grey for VestoWIN Premium 200-202	201105000	9999999999999
510	054003	de: Glasscheibe inkl. Thermometer für Backrohrtüre ZHN und VEP bis 01/2014	201105000	9999999999999
515	010029	Handle for VestoWIN Premium 200-202, VestoWIN Klassik 170-220	201105000	9999999999999
520	004928	Glass fibre cord 5/5mm for FireWIN, ZHN, VestoWIN Premium 200-202	201105000	9999999999999
530	010028	Handle 149 for VestoWIN Premium 200-202, fittings room Vesto 200	201105000	9999999999999
540	010027	Handle 519 for VestoWIN Premium 200-202	201105000	9999999999999
545	012688	de: Haltering mit Kappe UN 9318 verchromt ZHN	201105000	9999999999999
550	004863	Manually operated bleeder VFR 3/8" for ZHN,KSN,GKW,NBE115,GKA/E,VestoWIN Klassik 170-220, VestoWIN Premium 200-202	201105000	9999999999999
560	080675	Lifting jack for ZHN,KSN160/200/150, VestoWIN Premium 200-202, VestoWIN Klassik 170	201105000	9999999999999
570	046886	Heating door plate for VestoWIN Premium 202	201105000	9999999999999
580	046894	Heating door black/grey for VestoWIN Klassik 170, VestoWIN Premium 202	201105000	9999999999999
580	046895	Heating door signal white for VestoWIN Premium 202, VestoWIN Klassik 170	201105000	9999999999999
590	004626	Oven hot plate (547x505x7mm) for ZHN162/182/212 ZHN0621, VestoWIN Premium 202	201105000	9999999999999
595	016253	Ceran hob 202 VEP	201105000	9999999999999
600	004081	Boiler hot plate (418x505x7mm) for KSN160/200/150,ZHN18/21, VestoWIN Premium 200-202, VestoWIN Klassik 170	201105000	9999999999999
605	048172	Hot plate - flue tube top for VestoWIN Premium 202	201105000	9999999999999
610	067598	de: Herdplattenauflage hinten für ZHN	201105000	9999999999999
620	067644	Hot plate support front for ZHN066, VestoWIN Premium 200-202	201105000	9999999999999
630	048026	Stove frame right VEP202 as of SN: 105001	201105000	9999999999999
640	047890	Wood drawer complete VEP	201105000	9999999999999
640	066451	Wood chest for ZHN, VestoWIN Premium 200-202	201105000	9999999999999
650	046554	Wood chest liner for VestoWIN Premium 200-202	201105000	9999999999999
655	047901	Insulationplate oven for VestoWIN Premium 200-202	201105000	9999999999999
656	048047	Insulation cover hood 400x53x19 for VestoWIN Premium 200-202	201105000	9999999999999
657	048048	Insulation cover hood top 520x75x19 for VestoWIN Premium 200-202	201105000	9999999999999
660	067091	Insolate sheet for ZHN	201105000	9999999999999
665	048049	Insulation sealing ledge 480x40x19 for VestoWIN Premium 200-202	201105000	9999999999999
670	063622	Insulation gasket cover for VestoWIN Premium 200-202	201105000	9999999999999

Item no.	Article no.	Description	Serialnumber from	Serialnumber t
680	003273	Heating door insulation 225x153x50 for VestoWIN Premium 200-202	201105000	9999999999999
690	066923	Insolate sidewall 520X470X1/2" VEP	201105000	9999999999999
695	048051	Insulation jet protection plate 465x120x13 for VestoWIN Premium 200-202	201105000	9999999999999
700	081159	Boiler insulation rear 400 x 220 x 20mm for VestoWIN Premium 200-202	201105000	9999999999999
710	003274	Boiler insulation side 380x220x20 for VestoWIN Premium 200-202, VestoWIN Klassik 170-220	201105000	9999999999999
720	003270	Boiler insulation front left 220x75x20 for VestoWIN Premium 200-202, VestoWIN Klassik 170-220	201105000	9999999999999
730	003271	Boiler insulation front right 220x75x20 for VestoWIN Premium 200-202, VestoWIN Klassik 170-220	201105000	9999999999999
740	004193	Insolate rear wall 493x485x1" ZHN,VEP	201105000	9999999999999
750	066818	Insolate rear wall ZHN162/212,VEP202 to lot 4	201105000	9999999999999
760	066885	Insolate sidewards ZHN162/212,VEP202	201105000	9999999999999
770	004057	Knob no.30.298-002-001 for ZHN,FKV,VestoWIN Klassik 170-220, VestoWIN Premium 200-202	201105000	9999999999999
780	012513	Knee no.95T 5/4“ for KSN, VestoWIN Premium 200-202, VestoWIN Klassik 170-220	201105000	9999999999999
790	023906	Throttle flap button (D10x15) for KSN,ZHN,VestoWIN Klassik 170-220, VestoWIN Premium 200-202	201105000	9999999999999
800	004901	Wheel for wood drawer	201105000	9999999999999
810	047084	Baking tray for ZHL,ZHN,VestoWIN Premium 200-202	201105000	9999999999999
820	085146	Crank for vibration device and grate lifting equipment for KSN,ZHN,VestoWIN Klassik 170-220	201105000	9999999999999
830	005111	Heating surface cleaning bearing block for FireWIN, VestoWIN Klassik 170-220, VarioWIN, VestoWIN Premium 200-202	201105000	9999999999999
840	031119	4.8x16 raised countersunk head screw, DIN 7983 for VestoWIN Premium 200-202	201105000	9999999999999
850	018198	4.8x22 raised countersunk head screw for VestoWIN Premium 200-202	201105000	9999999999999
860	020095	M5x16 TT raised countersunk head screw, DIN 7500ME for VestoWIN Premium 200-202, VestoWIN Klassik 170-220	201105000	9999999999999
870	046824	Air choke for VestoWIN Premium 200-202, VestoWIN Klassik 170-220	201105000	9999999999999
872	048906	Retro fittings L-bracket	201105000	9999999999999
880	075752	Wall support for KSL25,ZHL,KSN250,ZHN18/21,VestoWIN Klassik 220, VestoWIN Premium 200-202	201105000	9999999999999
890	010421	KSN100 Thermostat minimal 716 RU-9289 0-95 Grades for FK,GWX,KSN,ZHN,GSX,ETX,SNX,FKX,VestoWIN Klassik 170-220, VestoWIN Premium 20	201105000	9999999999999
900	060558	Nut for lifting equipment rear for ZHN210/212,KSN160/200/150,VestoWIN Klassik 170, VestoWIN Premium 200-202	201105000	9999999999999
910	081485	Nut for lifting equipment front for ZHN210/212,KSN160/200/150,VestoWIN Klassik 170, VestoWIN Premium 200-202	201105000	9999999999999
915	016659	Hexagon nut M8 DIN434	201105000	9999999999999
920	017949	6x24 locating dowel pin, DIN 1472 for PMX,FKX,KSN,VEP200-202	201105000	9999999999999
930	021598	M6x30 locating dowel pin, DIN 1472 for KSN,ZHN,VestoWIN Klassik 170-220, VestoWIN Premium 200-202	201105000	9999999999999
940	000299	Silicone buffer	201105000	9999999999999
950	047081	Cleaning door for VestoWIN Premium 200-202	201105000	9999999999999
955	048056	rear frame for VestoWIN Premium 202	201105000	9999999999999
957	048057	front frame for VestoWIN Premium 200-202	201105000	9999999999999
960	004065	KSN809 Knurled button for ZHN,KSN,VestoWIN Klassik 170-220, VestoWIN Premium 200-202, EasyWIN Klassik/Premium 180	201105000	9999999999999
970	047882	Flue gas guide plate VEP	201105000	9999999999999
970	067296	Flue gas baffle plate for ZHN, VestoWIN Premium 200-202	201105000	9999999999999
980	004014	KSN095 241 5/4“-1“ reduction nipple, black for KSN,ZHN,VestoWIN Klassik 170-220, VestoWIN Premium 200-202	201105000	9999999999999
990	000280	KSL194 Cleaning brush (680x80/57x40) for FKU,ZHN,KSN,ZHL,KS,FKX,VestoWIN Klassik 170-220, VestoWIN Premium 200-202	201105000	9999999999999
1000	503022	VESTO009 Stainless steel side flue cover plate	201105000	9999999999999
1010	066532	Pipe socket 150mm for ZHN210/212, VestoWIN Premium 200-202	201105000	9999999999999
1020	004779	Grate breadth=153 for VestoWIN 170, VestoWIN Premium 200-202	201105000	9999999999999
1030	046842	Grate support for VestoWIN Premium 200-202	201105000	9999999999999
1040	080292	KSN019 Grate support complete for ZHN,KSN160/200/150, VestoWIN Premium 200-202, VestoWIN Klassik 170	201105000	9999999999999
1050	066753	Rear wall for ZHN162/212,VestoWIN Premium 202	201105000	9999999999999
1060	072192	Scratcher	201105000	9999999999999
1070	046767	Vibration axle for VestoWIN Premium 200-202, VestoWIN Klassik 170-220	201105000	9999999999999
1080	046847	Ash door protection plate for VestoWIN Klassik 170, VestoWIN Premium 200-202	201105000	9999999999999
1090	046855	Heating door protection plate for VestoWIN Premium 200-202	201105000	9999999999999
1100	067911	Flue protection plate for ZHN, VestoWIN Premium 200-202	201105000	9999999999999
1110	031549	Hexagon screw M6x12 DIN 7500	201105000	9999999999999
1120	049562	Side panel left signal white VEK170-220,VEP200-202,VESTO200	201105000	9999999999999

Item no.	Article no.	Description	Serialnumber from	Serialnumber t
1120	049564	Side panel left / grey	201105000	9999999999999
1120	051361	de: Seitenwand links schwarzgrau inkl. Blindscheibe für VestoWIN und Vesto200	201105000	9999999999999
1120	051362	de: Seitenwand links signalweiß inkl. Blindscheibe für VestoWIN und Vesto200	201105000	9999999999999
1130	049563	Side panel right / white	201105000	9999999999999
1130	049566	Side panel right / grey	201105000	9999999999999
1130	051363	de: Seitenwand rechts schwarzgrau inkl. Blindscheibe für VestoWIN und Vesto200	201105000	9999999999999
1130	051364	de: Seitenwand rechts signalweiß inkl. Blindscheibe für VestoWIN und Vesto200	201105000	9999999999999
1140	046736	Secondary air tube for VestoWIN Klassik 170-220, VestoWIN Premium 200-202	201105000	9999999999999
1150	046941	Base for VestoWIN Premium 202	201105000	9999999999999
1160	080470	Base plate 381 X 364 X 0,9 for VestoWIN Klassik 170, VestoWIN Premium 200-202	201105000	9999999999999
1165	018666	Clamping pin DIN 1481 - Ø4x20, for 3-way changeover unit for PMX, VarioWIN (* not illustrated), VestoWIN Premium 200-202, VestoWIN	201105000	9999999999999
1170	046754	Plug-in hinge left for VestoWIN Premium 200-202	201105000	9999999999999
1180	046755	Plug-in hinge right for VestoWIN Premium 200-202	201105000	9999999999999
1190	007108	Vertical grate (226mm) for VestoWIN Klassik 170, VestoWIN Premium 200-202	201105000	9999999999999
1195	047916	Rod heating flap for VestoWIN Premium 200-202, VestoWIN Klassik 170-220	201105000	9999999999999
1200	072222	Poker (D9x750) for KSL,ZHL,ZHN,KSN,VestoWIN Klassik 170-220, VestoWIN Premium 200-202	201105000	9999999999999
1205	047895	Jet protection plate for VestoWIN Premium 200-202	201105000	9999999999999
1210	004197	KSN094 WAF Plug no.290 5/4" for ZHN,KSN,Vesto WIN Klassik 170-220, VestoWIN Premium 200-202	201105000	9999999999999
1215	005452	OK-915 Immersion sleeve (129 mm) No.55501.04 for EKX,OK/E,GWX,KSN,ZHN,OK-915,ETX,SNX,FKX,MIRA,FireWIN,VestoWIN Klassik 170-220,	201105000	9999999999999
1220	004049	KSN027 Thermometer Z.Nr.SK 2014 IFC 52-052 KRF for ZHN,OEX,KSN,ASN,NBE,VestoWIN Premium 200-202, VestoWIN Klassik 170-220, fitting	201105000	9999999999999
1230	054003	de: Glasscheibe inkl. Thermometer für Backrohrtüre ZHN und VEP bis 01/2014	201105000	9999999999999
1250	047878	de: Trennwand Iso.-Wand Backrohr	201105000	9999999999999
1250	067199	Oven dividing/insulating wall for VestoWIN Premium 200-202	201105000	9999999999999
1260	047904	Top dividing wall VEP	201105000	9999999999999
1260	067113	Dividing wall top for ZHN162/212,VestoWIN Premium 202	201105000	9999999999999
1270	047879	Seperating plate	201105000	9999999999999
1270	067180	Dividing wall between boiler and oven for ZHN, VestoWIN Premium 200-202	201105000	9999999999999
1280	061840	KSN022 Door catch for KSN,ZHN,PMX, VestoWIN Premium 200-202, VestoWIN Klassik 170-220	201105000	9999999999999
1290	004413	KSN099 Union nut no.374 5/4“ for VestoWIN Premium 200-202, VestoWIN Klassik 170-220	201105000	9999999999999
1300	047535	Bolt holder for VestoWIN Klassik 170 from batch 2, VestoWIN Klassik 220 from batch 4, VestoWIN Premium 200-202 from batch 3	201105000	9999999999999
1305	047926	Bell crank for VestoWIN Premium 200-202	201105000	9999999999999
1310	046861	Screw connection plate for VestoWIN Premium 200-202	201105000	9999999999999
1320	079685	Adjustment foot for VestoWIN Premium 200-202, VestoWIN Klassik 170-220	201105000	9999999999999
1325	047873	Complete pullout for VestoWIN Premium 200-202	201105000	9999999999999
1330	047083	Oven front wall for VestoWIN Premium 202 to batch 4	201105000	9999999999999
1340	073458	Wall end plate (954x108x1,25) for ZHN160, VestoWIN Premium 202	201105000	9999999999999
1350	066567	KSN9492 Throttle flap shaft for KSN210/250,ZHN18/21,VestoWIN Klassik 170-220, VestoWIN Premium 200-202	201105000	9999999999999
1360	004006	KSN097 Bracket no.92 3/8“ for ZHN,KSN,VestoWIN Klassik 170-220, VestoWIN Premium 200-202	201105000	9999999999999
1370	017884	Cylinder screw M5x12 TT, DIN 7500C for VestoWIN Premium 200-202	201105000	9999999999999

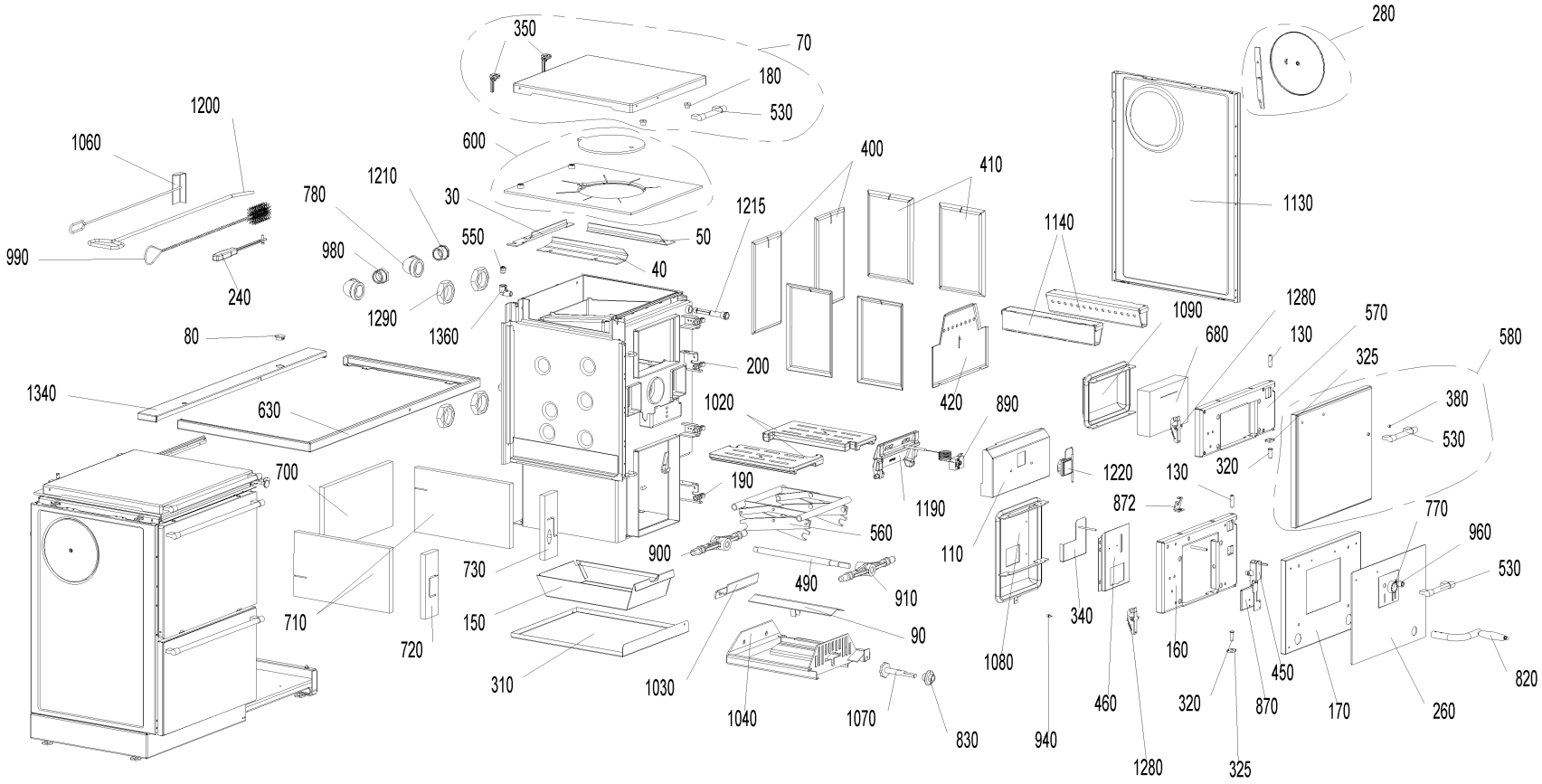
350
70
180
530
280
1200
1060
600
400
410
1130
780
1210
30
1215
1140
990
980
550
50
40
240
1290
1360
1090
1280
570
80
680
130
580
200
325
1340
630
1020
420
890
380
530
700
190
1220
130
320
1190
872
770
560
960
730
900
110
530
490
910
710
150
340
90
720
1080
160
450
820
310
1030
460
320
870
170
260
1040
1070
830
940
1280
325

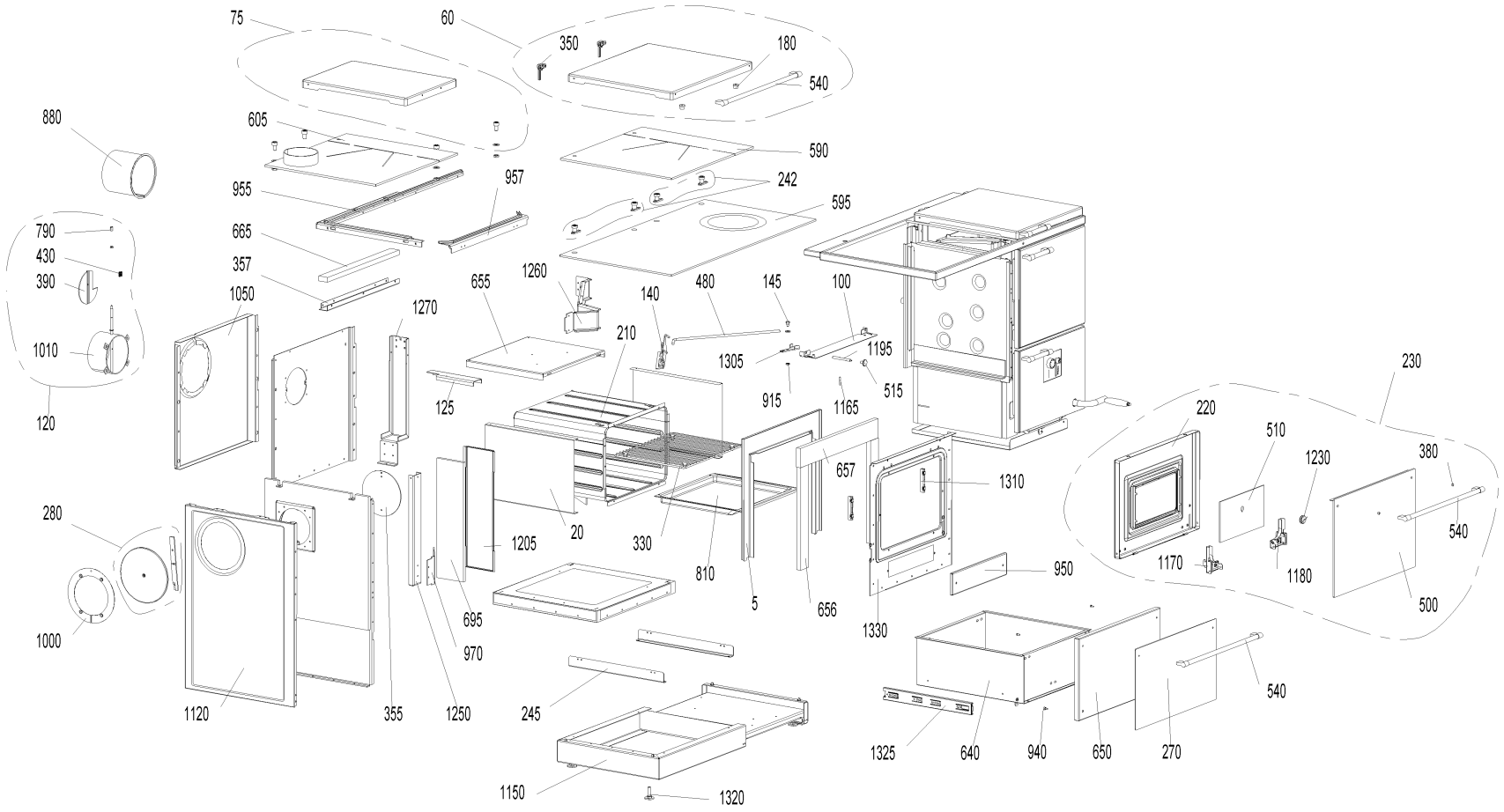
75
60
350
180
540
880
605
590
242
955
957
595
790
430
390
665
357
1050
1260
655
140
480
145
100
1270
210
1195
1010
1305
515
915
1165
125
120
230
220
510
1230
380
657
1310
280
20
1205
330
810
540
1170
1180
950
5
656
1330
500
1000
695
970
540
1120
355
1250
245
1325
640
940
650
270
1150
1320

Item no.	Article no.	Description	Serialnumber from	Serialnumber t
5	047877	Oven cover plate inside for VestoWIN Premium 200 - 202	201105000	9999999999999
10	075450	de: Isolierblech hinten Backrohr ZHN (405X126X1-1,25)	201105000	9999999999999
20	075442	Oven cover plate side for VestoWIN Premium 200-202	201105000	9999999999999
30	046864	Rear cover plate for VestoWIN KLassik 200-202, VestoWIN Klassik 170	201105000	9999999999999
40	046937	Cover plate left for VestoWIN Premium 200-202, VestoWIN Klassik 170	201105000	9999999999999
50	046938	Cover plate right for VestoWIN Premium 200-202, VestoWIN Klassik 170	201105000	9999999999999
60	047012	Oven cover hood black/grey for VestoWIN Premium 200-202	201105000	9999999999999
60	047013	Oven cover hood signal white for VestoWIN Premium 200-202	201105000	9999999999999
60	048595	VEP Isulation cover black	201105000	9999999999999
60	048596	VEP Isulation cover white	201105000	9999999999999
70	047014	Boiler cover hood black/grey for VestoWIN Premium 202	201105000	9999999999999
70	047016	Boiler cover hood signal white for VestoWIN Premium 202, VestoWIN Klassik 170	201105000	9999999999999
70	048601	VEP-VEK170 Isulation cover grey	201105000	9999999999999
70	048602	VEP-VEK170 Isulation cover white	201105000	9999999999999
75	048169	flue tube - cover hood top signal white for VestoWIN Premium 200-202	201105000	9999999999999
75	048170	flue tube - cover hood top black/grey for VestoWIN Premium 200-202	201105000	9999999999999
80	004995	Cover for HMX, PMX, VestoWIN Premium 200-202, VestoWIN Klassik 170-220	201105000	9999999999999
90	081582	Cover for threaded spindle for KSN,ZHN,VestoWIN Klassik 170-220	201105000	9999999999999
100	075574	Oven frame cover for VestoWIN Premium 200-202	201105000	9999999999999
110	046843	Thermostat cover for VestoWIN Premium 200-202, VestoWIN Klassik 170	201105000	9999999999999
120	085472	Flue outlet with throttle flap for VestoWIN Premium 200-202	201105000	9999999999999
125	048052	spacer ledge for VestoWIN Premium 202	201105000	9999999999999
130	010019	Door mounting axle for VestoWIN Klassik 170-220, VestoWIN Premium 200-202	201105000	9999999999999
140	047906	Heating flap VEP	201105000	9999999999999
140	067121	Heating flap for ZHL,ZHN,VestoWIN Premium 200-202 ZHN036	201105000	9999999999999
145	012502	Collar screw	201105000	9999999999999
150	046839	Ash pan for VestoWIN Klassik 170, VestoWIN Premium 200-202	201105000	9999999999999
160	046889	Ash door plate for VestoWIN Klassik 170, VestoWIN Premium 202	201105000	9999999999999
170	046850	Ash door liner for VestoWIN Klassik 170, VestoWIN Premium 200-202	201105000	9999999999999
180	023922	Insulating cover support Ø20x15mm for KSN/ZHN,VestoWIN Klassik 170-220, VestoWIN Premium 200-202	201105000	9999999999999
190	033432	Eyebolt similar to DIN 444 - B M10x50 - 4.6 - bright for VarioWIN, FireWIN, VestoWIN Premium 200-202, VestoWIN Klassik 170-220	201105000	9999999999999
200	033432	Eyebolt similar to DIN 444 - B M10x50 - 4.6 - bright for VarioWIN, FireWIN, VestoWIN Premium 200-202, VestoWIN Klassik 170-220	201105000	9999999999999
210	050301	Oven set for ZHN	201105000	9999999999999
220	047079	Oven door for VestoWIN Premium 200-202	201105000	9999999999999
230	046920	Oven door complete signal white for VestoWIN Premium 200-202	201105000	9999999999999
230	046936	Oven door complete black/grey for VestoWIN Premium 200-202	201105000	9999999999999
240	073407	Operating handle for FKV,KSL,ZHL,FKN,FAX,ZHN,KSN,FKH,HMX,VestoWIN Premium 200-202, VestoWIN Klassik 170-220	201105000	9999999999999
242	048603	Fastening set	201105000	9999999999999
245	047887	mounting bracket - complete pullout for VestoWIN Premium 200-202	201105000	9999999999999
250	018139	Cylinder screw 4.2x13 DIN7981SP (not illustrated)	201105000	9999999999999
260	046927	VESTO001 Ash door cover signal white for VestoWIN Klassik 170	201105000	9999999999999
260	046931	VESTO002 Ash door cover brown for VestoWIN KLassik 170, VestoWIN Premium 202	201105000	9999999999999
260	046961	VESTO003 Ash door cover stainless steel for VestoWIN Klassik 170, VestoWIN Premium 202	201105000	9999999999999
270	046924	VESTO2 Wood chest cover signal white for VestoWIN Premium 200-202	201105000	9999999999999
270	046925	VESTO4 Wood chest cover brown for VestoWIN Premium 200-202	201105000	9999999999999
270	046957	Wood chest cover stainless steel for VestoWIN Premium 200-202	201105000	9999999999999
280	047003	Dummy washer black/grey for VestoWIN Klassik 170-220, Vesto WIN Premium 200-202	201105000	9999999999999
280	047004	Dummy washer signal white for VestoWIN Klassik 170-220, VestoWIN Premium 200-202	201105000	9999999999999
290	066834	Buttom for ZHN,VEP	201105000	9999999999999
300	066842	Bottom for ZHN,VEP	201105000	9999999999999
310	080500	Ground tray (498x416x0,9) for ZHN,KSN150/160/200, VestoWIN Premium 200-202, VestoWIN Klassik 170	201105000	9999999999999

Item no.	Article no.	Description	Serialnumber from	Serialnumber t
320	010018	Ø10x30 bolt, DIN1434 for VestoWIN Klassik 170-220, VestoWIN Premium 200-202	201105000	9999999999999
325	047535	Bolt holder for VestoWIN Klassik 170 from batch 2, VestoWIN Klassik 220 from batch 4, VestoWIN Premium 200-202 from batch 3	201105000	9999999999999
330	003174	Grid iron for ZHN, VestoWIN Premium 200-202	201105000	9999999999999
340	046821	Fuel economy slider for VestoWIN Premium 200-202, VestoWIN Klassik 170-220	201105000	9999999999999
350	049885	Hinge for top (galvanised)	201105000	9999999999999
355	048044	Cover disc for VestoWIN Premium 200-202	201105000	9999999999999
357	048043	Sealing ledge for VestoWIN Premium 200-202	201105000	9999999999999
360	046999	Ash/heating door rope seal for VestoWIN Premium 200-202, VestoWIN Klassik 170-220	201105000	9999999999999
370	047011	Hot plate rope seal for VestoWIN Premium 200-202	201105000	9999999999999
380	010020	Spacer sleeve for VestoWIN Klassik 170-220, VestoWIN Premium 200-202	201105000	9999999999999
390	068101	Throttle flap for KSN 250,ZHN18/21,KSN949, VestoWIN Premium 200-202	201105000	9999999999999
400	046840	Rear hook-in plate for VestoWIN Klassik 170, VestoWIN Premium 200-202	201105000	9999999999999
410	046732	Hook-in plate left, right for VestoWIN Klassik 170-220, VestoWIN Premium 200-202	201105000	9999999999999
420	046841	Front hook-in plate for VestoWIN Klassik 170, VestoWIN Premium 200-202	201105000	9999999999999
430	004073	Throttle flap spring for VestoWIN Klassik 170-220, VestoWIN Premium 200-202	201105000	9999999999999
440	005959	Immersion sleeve spring for VestoWIN Premium 200-202, VestoWIN Klassik 170-220	201105000	9999999999999
450	004030	Combustion controlling mechanism for KSN,ZHN,FKV,VestoWIN Klassik 170-220, VestoWIN Premium 200-202	201105000	9999999999999
460	046848	Combustion controlling mechanism retaining plate for VestoWIN Klassik 170, VestoWIN Premium 200-202	201105000	9999999999999
470	019410	Wing nut M6	201105000	9999999999999
480	047905	Heating flap linkage	201105000	9999999999999
480	067148	Heating flap linkage for ZHN162/212, ZHN0364, VestoWIN Premium 202	201105000	9999999999999
490	081213	Threaded spindle (Ø20x377) for KSN,ZHN,VestoWIN Klassik 170-220, VestoWIN Premium 200-202	201105000	9999999999999
500	046836	Glass oven signal white for VestoWIN Premium 200-202	201105000	9999999999999
500	046935	Glass oven black/grey for VestoWIN Premium 200-202	201105000	9999999999999
510	054003	de: Glasscheibe inkl. Thermometer für Backrohrtüre ZHN und VEP bis 01/2014	201105000	9999999999999
515	010029	Handle for VestoWIN Premium 200-202, VestoWIN Klassik 170-220	201105000	9999999999999
520	004928	Glass fibre cord 5/5mm for FireWIN, ZHN, VestoWIN Premium 200-202	201105000	9999999999999
530	010028	Handle 149 for VestoWIN Premium 200-202, fittings room Vesto 200	201105000	9999999999999
540	010027	Handle 519 for VestoWIN Premium 200-202	201105000	9999999999999
545	012688	de: Haltering mit Kappe UN 9318 verchromt ZHN	201105000	9999999999999
550	004863	Manually operated bleeder VFR 3/8" for ZHN,KSN,GKW,NBE115,GKA/E,VestoWIN Klassik 170-220, VestoWIN Premium 200-202	201105000	9999999999999
560	080675	Lifting jack for ZHN,KSN160/200/150, VestoWIN Premium 200-202, VestoWIN Klassik 170	201105000	9999999999999
570	046886	Heating door plate for VestoWIN Premium 202	201105000	9999999999999
580	046894	Heating door black/grey for VestoWIN Klassik 170, VestoWIN Premium 202	201105000	9999999999999
580	046895	Heating door signal white for VestoWIN Premium 202, VestoWIN Klassik 170	201105000	9999999999999
590	004626	Oven hot plate (547x505x7mm) for ZHN162/182/212 ZHN0621, VestoWIN Premium 202	201105000	9999999999999
595	016253	Ceran hob 202 VEP	201105000	9999999999999
600	004081	Boiler hot plate (418x505x7mm) for KSN160/200/150,ZHN18/21, VestoWIN Premium 200-202, VestoWIN Klassik 170	201105000	9999999999999
605	048172	Hot plate - flue tube top for VestoWIN Premium 202	201105000	9999999999999
610	067598	de: Herdplattenauflage hinten für ZHN	201105000	9999999999999
620	067644	Hot plate support front for ZHN066, VestoWIN Premium 200-202	201105000	9999999999999
630	048026	Stove frame right VEP202 as of SN: 105001	201105000	9999999999999
640	047890	Wood drawer complete VEP	201105000	9999999999999
640	066451	Wood chest for ZHN, VestoWIN Premium 200-202	201105000	9999999999999
650	046554	Wood chest liner for VestoWIN Premium 200-202	201105000	9999999999999
655	047901	Insulationplate oven for VestoWIN Premium 200-202	201105000	9999999999999
656	048047	Insulation cover hood 400x53x19 for VestoWIN Premium 200-202	201105000	9999999999999
657	048048	Insulation cover hood top 520x75x19 for VestoWIN Premium 200-202	201105000	9999999999999
660	067091	Insolate sheet for ZHN	201105000	9999999999999
665	048049	Insulation sealing ledge 480x40x19 for VestoWIN Premium 200-202	201105000	9999999999999
670	063622	Insulation gasket cover for VestoWIN Premium 200-202	201105000	9999999999999

Item no.	Article no.	Description	Serialnumber from	Serialnumber t
680	003273	Heating door insulation 225x153x50 for VestoWIN Premium 200-202	201105000	9999999999999
690	066923	Insolate sidewall 520X470X1/2" VEP	201105000	9999999999999
695	048051	Insulation jet protection plate 465x120x13 for VestoWIN Premium 200-202	201105000	9999999999999
700	081159	Boiler insulation rear 400 x 220 x 20mm for VestoWIN Premium 200-202	201105000	9999999999999
710	003274	Boiler insulation side 380x220x20 for VestoWIN Premium 200-202, VestoWIN Klassik 170-220	201105000	9999999999999
720	003270	Boiler insulation front left 220x75x20 for VestoWIN Premium 200-202, VestoWIN Klassik 170-220	201105000	9999999999999
730	003271	Boiler insulation front right 220x75x20 for VestoWIN Premium 200-202, VestoWIN Klassik 170-220	201105000	9999999999999
740	004193	Insolate rear wall 493x485x1" ZHN,VEP	201105000	9999999999999
750	066818	Insolate rear wall ZHN162/212,VEP202 to lot 4	201105000	9999999999999
760	066885	Insolate sidewards ZHN162/212,VEP202	201105000	9999999999999
770	004057	Knob no.30.298-002-001 for ZHN,FKV,VestoWIN Klassik 170-220, VestoWIN Premium 200-202	201105000	9999999999999
780	012513	Knee no.95T 5/4“ for KSN, VestoWIN Premium 200-202, VestoWIN Klassik 170-220	201105000	9999999999999
790	023906	Throttle flap button (D10x15) for KSN,ZHN,VestoWIN Klassik 170-220, VestoWIN Premium 200-202	201105000	9999999999999
800	004901	Wheel for wood drawer	201105000	9999999999999
810	047084	Baking tray for ZHL,ZHN,VestoWIN Premium 200-202	201105000	9999999999999
820	085146	Crank for vibration device and grate lifting equipment for KSN,ZHN,VestoWIN Klassik 170-220	201105000	9999999999999
830	005111	Heating surface cleaning bearing block for FireWIN, VestoWIN Klassik 170-220, VarioWIN, VestoWIN Premium 200-202	201105000	9999999999999
840	031119	4.8x16 raised countersunk head screw, DIN 7983 for VestoWIN Premium 200-202	201105000	9999999999999
850	018198	4.8x22 raised countersunk head screw for VestoWIN Premium 200-202	201105000	9999999999999
860	020095	M5x16 TT raised countersunk head screw, DIN 7500ME for VestoWIN Premium 200-202, VestoWIN Klassik 170-220	201105000	9999999999999
870	046824	Air choke for VestoWIN Premium 200-202, VestoWIN Klassik 170-220	201105000	9999999999999
872	048906	Retro fittings L-bracket	201105000	9999999999999
880	075752	Wall support for KSL25,ZHL,KSN250,ZHN18/21,VestoWIN Klassik 220, VestoWIN Premium 200-202	201105000	9999999999999
890	010421	KSN100 Thermostat minimal 716 RU-9289 0-95 Grades for FK,GWX,KSN,ZHN,GSX,ETX,SNX,FKX,VestoWIN Klassik 170-220, VestoWIN Premium 20	201105000	9999999999999
900	060558	Nut for lifting equipment rear for ZHN210/212,KSN160/200/150,VestoWIN Klassik 170, VestoWIN Premium 200-202	201105000	9999999999999
910	081485	Nut for lifting equipment front for ZHN210/212,KSN160/200/150,VestoWIN Klassik 170, VestoWIN Premium 200-202	201105000	9999999999999
915	016659	Hexagon nut M8 DIN434	201105000	9999999999999
920	017949	6x24 locating dowel pin, DIN 1472 for PMX,FKX,KSN,VEP200-202	201105000	9999999999999
930	021598	M6x30 locating dowel pin, DIN 1472 for KSN,ZHN,VestoWIN Klassik 170-220, VestoWIN Premium 200-202	201105000	9999999999999
940	000299	Silicone buffer	201105000	9999999999999
950	047081	Cleaning door for VestoWIN Premium 200-202	201105000	9999999999999
955	048056	rear frame for VestoWIN Premium 202	201105000	9999999999999
957	048057	front frame for VestoWIN Premium 200-202	201105000	9999999999999
960	004065	KSN809 Knurled button for ZHN,KSN,VestoWIN Klassik 170-220, VestoWIN Premium 200-202, EasyWIN Klassik/Premium 180	201105000	9999999999999
970	047882	Flue gas guide plate VEP	201105000	9999999999999
970	067296	Flue gas baffle plate for ZHN, VestoWIN Premium 200-202	201105000	9999999999999
980	004014	KSN095 241 5/4“-1“ reduction nipple, black for KSN,ZHN,VestoWIN Klassik 170-220, VestoWIN Premium 200-202	201105000	9999999999999
990	000280	KSL194 Cleaning brush (680x80/57x40) for FKU,ZHN,KSN,ZHL,KS,FKX,VestoWIN Klassik 170-220, VestoWIN Premium 200-202	201105000	9999999999999
1000	503022	VESTO009 Stainless steel side flue cover plate	201105000	9999999999999
1010	066532	Pipe socket 150mm for ZHN210/212, VestoWIN Premium 200-202	201105000	9999999999999
1020	004779	Grate breadth=153 for VestoWIN 170, VestoWIN Premium 200-202	201105000	9999999999999
1030	046842	Grate support for VestoWIN Premium 200-202	201105000	9999999999999
1040	080292	KSN019 Grate support complete for ZHN,KSN160/200/150, VestoWIN Premium 200-202, VestoWIN Klassik 170	201105000	9999999999999
1050	066753	Rear wall for ZHN162/212,VestoWIN Premium 202	201105000	9999999999999
1060	072192	Scratcher	201105000	9999999999999
1070	046767	Vibration axle for VestoWIN Premium 200-202, VestoWIN Klassik 170-220	201105000	9999999999999
1080	046847	Ash door protection plate for VestoWIN Klassik 170, VestoWIN Premium 200-202	201105000	9999999999999
1090	046855	Heating door protection plate for VestoWIN Premium 200-202	201105000	9999999999999
1100	067911	Flue protection plate for ZHN, VestoWIN Premium 200-202	201105000	9999999999999
1110	031549	Hexagon screw M6x12 DIN 7500	201105000	9999999999999
1120	049562	Side panel left signal white VEK170-220,VEP200-202,VESTO200	201105000	9999999999999

Item no.	Article no.	Description	Serialnumber from	Serialnumber t
1120	049564	Side panel left / grey	201105000	9999999999999
1120	051361	de: Seitenwand links schwarzgrau inkl. Blindscheibe für VestoWIN und Vesto200	201105000	9999999999999
1120	051362	de: Seitenwand links signalweiß inkl. Blindscheibe für VestoWIN und Vesto200	201105000	9999999999999
1130	049563	Side panel right / white	201105000	9999999999999
1130	049566	Side panel right / grey	201105000	9999999999999
1130	051363	de: Seitenwand rechts schwarzgrau inkl. Blindscheibe für VestoWIN und Vesto200	201105000	9999999999999
1130	051364	de: Seitenwand rechts signalweiß inkl. Blindscheibe für VestoWIN und Vesto200	201105000	9999999999999
1140	046736	Secondary air tube for VestoWIN Klassik 170-220, VestoWIN Premium 200-202	201105000	9999999999999
1150	046941	Base for VestoWIN Premium 202	201105000	9999999999999
1160	080470	Base plate 381 X 364 X 0,9 for VestoWIN Klassik 170, VestoWIN Premium 200-202	201105000	9999999999999
1165	018666	Clamping pin DIN 1481 - Ø4x20, for 3-way changeover unit for PMX, VarioWIN (* not illustrated), VestoWIN Premium 200-202, VestoWIN	201105000	9999999999999
1170	046754	Plug-in hinge left for VestoWIN Premium 200-202	201105000	9999999999999
1180	046755	Plug-in hinge right for VestoWIN Premium 200-202	201105000	9999999999999
1190	007108	Vertical grate (226mm) for VestoWIN Klassik 170, VestoWIN Premium 200-202	201105000	9999999999999
1195	047916	Rod heating flap for VestoWIN Premium 200-202, VestoWIN Klassik 170-220	201105000	9999999999999
1200	072222	Poker (D9x750) for KSL,ZHL,ZHN,KSN,VestoWIN Klassik 170-220, VestoWIN Premium 200-202	201105000	9999999999999
1205	047895	Jet protection plate for VestoWIN Premium 200-202	201105000	9999999999999
1210	004197	KSN094 WAF Plug no.290 5/4" for ZHN,KSN,Vesto WIN Klassik 170-220, VestoWIN Premium 200-202	201105000	9999999999999
1215	005452	OK-915 Immersion sleeve (129 mm) No.55501.04 for EKX,OK/E,GWX,KSN,ZHN,OK-915,ETX,SNX,FKX,MIRA,FireWIN,VestoWIN Klassik 170-220,	201105000	9999999999999
1220	004049	KSN027 Thermometer Z.Nr.SK 2014 IFC 52-052 KRF for ZHN,OEX,KSN,ASN,NBE,VestoWIN Premium 200-202, VestoWIN Klassik 170-220, fitting	201105000	9999999999999
1230	054003	de: Glasscheibe inkl. Thermometer für Backrohrtüre ZHN und VEP bis 01/2014	201105000	9999999999999
1250	047878	de: Trennwand Iso.-Wand Backrohr	201105000	9999999999999
1250	067199	Oven dividing/insulating wall for VestoWIN Premium 200-202	201105000	9999999999999
1260	047904	Top dividing wall VEP	201105000	9999999999999
1260	067113	Dividing wall top for ZHN162/212,VestoWIN Premium 202	201105000	9999999999999
1270	047879	Seperating plate	201105000	9999999999999
1270	067180	Dividing wall between boiler and oven for ZHN, VestoWIN Premium 200-202	201105000	9999999999999
1280	061840	KSN022 Door catch for KSN,ZHN,PMX, VestoWIN Premium 200-202, VestoWIN Klassik 170-220	201105000	9999999999999
1290	004413	KSN099 Union nut no.374 5/4“ for VestoWIN Premium 200-202, VestoWIN Klassik 170-220	201105000	9999999999999
1300	047535	Bolt holder for VestoWIN Klassik 170 from batch 2, VestoWIN Klassik 220 from batch 4, VestoWIN Premium 200-202 from batch 3	201105000	9999999999999
1305	047926	Bell crank for VestoWIN Premium 200-202	201105000	9999999999999
1310	046861	Screw connection plate for VestoWIN Premium 200-202	201105000	9999999999999
1320	079685	Adjustment foot for VestoWIN Premium 200-202, VestoWIN Klassik 170-220	201105000	9999999999999
1325	047873	Complete pullout for VestoWIN Premium 200-202	201105000	9999999999999
1330	047083	Oven front wall for VestoWIN Premium 202 to batch 4	201105000	9999999999999
1340	073458	Wall end plate (954x108x1,25) for ZHN160, VestoWIN Premium 202	201105000	9999999999999
1350	066567	KSN9492 Throttle flap shaft for KSN210/250,ZHN18/21,VestoWIN Klassik 170-220, VestoWIN Premium 200-202	201105000	9999999999999
1360	004006	KSN097 Bracket no.92 3/8“ for ZHN,KSN,VestoWIN Klassik 170-220, VestoWIN Premium 200-202	201105000	9999999999999
1370	017884	Cylinder screw M5x12 TT, DIN 7500C for VestoWIN Premium 200-202	201105000	9999999999999

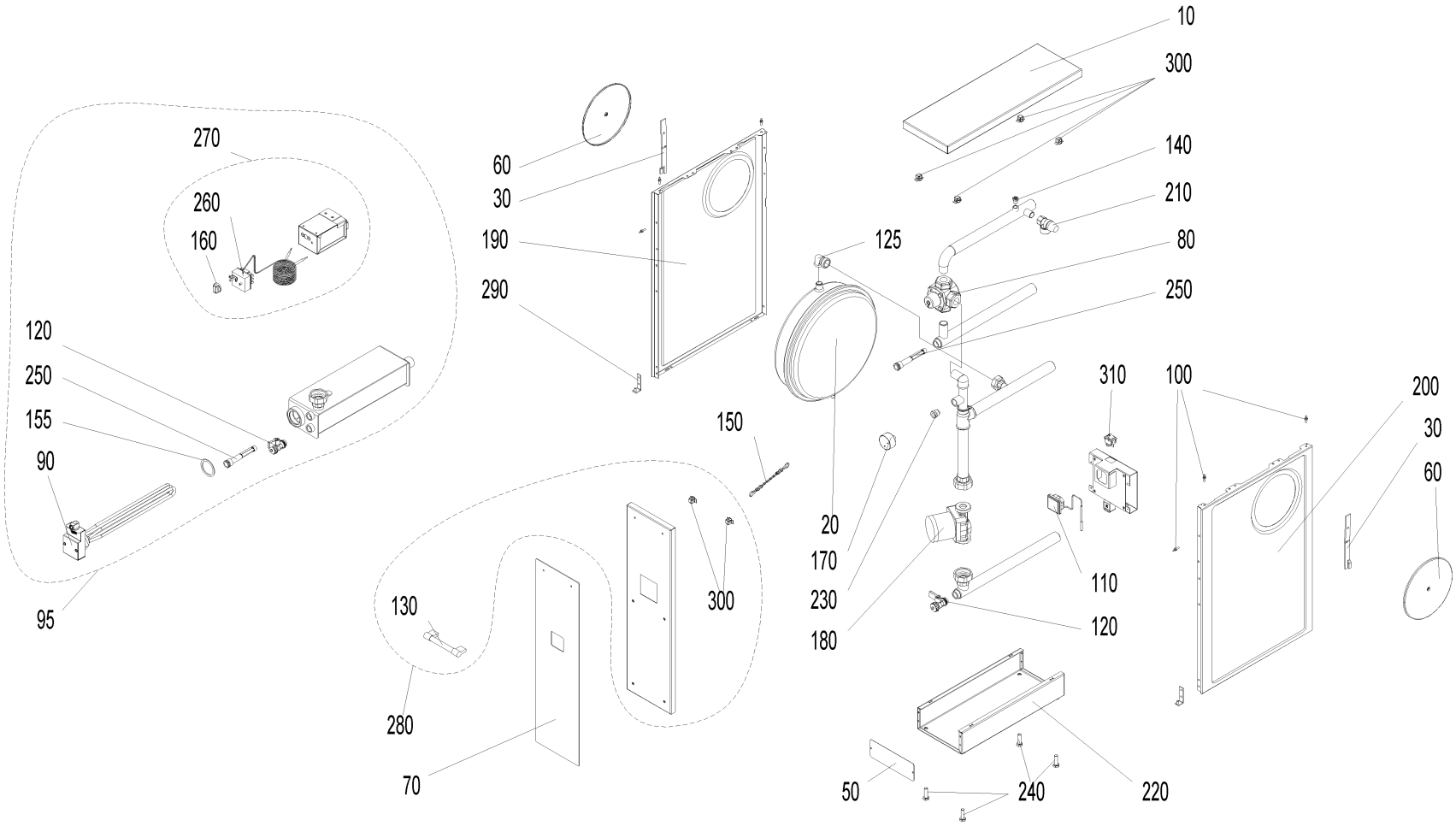
270
260
160
120
250
155
90
95
60
30
190
290
150
130
280
70
300
10
300
140
210
125
80
250
310
100
200
30
60
20
170
230
180
110
120
50
240
220

Item no.	Article no.	Description	Serialnumber from	Serialnumber to
10	083127	ASN037 Cover plate (662x302x1,25mm) for ASN, fittings cabinet Vesto 200	0	9999999999999999
20	003611	OEX101 DGN-10l expansion tank, ½" for OE/KN,OEX,GKA,ASN/E, fittings cabinet Vesto 200	0	9999999999999999
30	080098	KSN0341 Fastening clip for dummy washer for HN,KSN,ASN/E, fittings cabinet Vesto 200	0	9999999999999999
50	065471	ASN026, VESTO200 Cover for base for ASN/E, fittings cabinet Vesto 200	0	9999999999999999
60	049567	Blind disc white	0	9999999999999999
60	049568	Blind disc grey	0	9999999999999999
70	046833	VESTO031 Decorative trim, dark brown for fittings room Vesto 200	0	9999999999999999
70	046834	VESTO030 Decorative trim, signal white for fittings cabinet Vesto 200	0	9999999999999999
70	046926	VESTO032 Decorative trim, stainless steel for fittings cabinet Vesto 200	0	9999999999999999
80	004448	ASN060 3-way mixing valve 3/4“ for ASN/E,NBR,fittings cabinet Vesto 200	0	9999999999999999
90	505087	NB-087 Electric heating insert 6.0 kW for PSX707B,ASE,fittings cabinet Vesto 200	0	9999999999999999
95	505003	ASE060 Electric heater (for installation in the system) with optional connection for 2kW/230 V,4kW/400 V,6kW/400 V	0	9999999999999999
100	000191	KSL029 Forming screw, diameter 8x26/M5 for NBS,OEX,ASN,PMX,fittings cabinet Vesto 200, VarioWIN	0	9999999999999999
110	004049	KSN027 Thermometer Z.Nr.SK 2014 IFC 52-052 KRF for ZHN,OEX,KSN,ASN,NBE,VestoWIN Premium 200-202, VestoWIN Klassik 170-220, fitting	0	9999999999999999
120	004385	KFE cock	0	9999999999999999
125	012534	de: Knie Nr.95T,1/2" schwarz	0	9999999999999999
130	010028	Handle 149 for VestoWIN Premium 200-202, fittings room Vesto 200	0	9999999999999999
140	001058	ASL001 Manually operated bleeder VFR 1/4“ for OE/KN/M,GKX,ASN,ASL,OEX, MIRA, fittings cabinet Vesto 200, VarioWIN, FireWIN	0	9999999999999999
150	004723	OEX881 Chain for OEX,NBE,GKX,ASN, fittings room Vesto 200	0	9999999999999999
155	018678	NBR1001 Seal ring R 1 1/2" electric heating for AccuWIn, AccuWIN Solar	0	9999999999999999
160	012041	Knob PO 395	0	9999999999999999
170	001066	ASL002 Pressure gauge TYP101 Ø50 for OEX,OE/KN/M,GKW,ASN,ASL,GKX,GKA/E,MIRA,FireWIN,VarioWIN,fittings cabinet Vesto 200	0	9999999999999999
180	006422	Pump ALPHA2 25-60 130mm	0	9999999999999999
190	049562	Side panel left signal white VEK170-220,VEP200-202,VESTO200	0	9999999999999999
190	049564	Side panel left / grey	0	9999999999999999
200	049563	Side panel right / white	0	9999999999999999
200	049566	Side panel right / grey	0	9999999999999999
210	001031	ASL004 Safety valve 1/2“ 2.5 bar for GWX,OEX,OE/KN/M,ASL,GKW,GTX,ASN,GKA/E,MIRA,FireWIN,Vesto Art.Nr.:49292, VarioWIN, fittings ca	0	9999999999999999
220	083399	ASN025,VESTO200 Base für ASN/E, fittings cabinet Vesto 200	0	9999999999999999
230	010286	ASL0021 Shut-off valve 1/4“ internal for pressure gauge R1/2“ for ASL/M,ÖR,SH,OEM,OEN,GTX,ASN,OEX,MIRA,FireWIN,fittings cabinet Ve	0	9999999999999999
240	016713	ASN0251 Hexagon screw M10x35, DIN 933 for SilvaWIN, BioWIN XL 35-60, fittings cabinet Vesto 200	0	9999999999999999
250	000027	KSL332 Immersion sleeve 130 mm long for KSL/ZHL,GKA/E,fittings cabinet Vesto200, VarioWIN	0	9999999999999999
260	009083	NB-9341 Thermostat, 3-pin for ASN,NBS/L/R/K,EKL,fittings cabinet Vesto 200	0	9999999999999999
270	075310	ASN043 Thermostat box cpl. (incl. thermostat and knob) for ASE, fittings cabinet Vesto 200	0	9999999999999999
280	047578	Door dark grey for fittings room Vesto 200	0	9999999999999999
290	083739	ASN061 Door bearing cpl. galvanised (75x16x3) for ASN/E, fittings cabinet Vesto 200	0	9999999999999999
300	000507	KSL022 Door catch GP3-78/444, No.300.223 for NBS,ASL/N,OEN/M/X,ZHL,KSL,PMX,OKN/M,OKE/S, fittings cabinet Vesto 200	0	9999999999999999
310	005638	ASL010 Rocker switch blk./gr. 0-1 82.06.11.63.65 for OKE/S,FKV,ASL/N,GKW,NBS/L,E/SKX,GWX,FAX,GKX,GMX,SilvaWIN,fittings cabinet Ve	0	9999999999999999

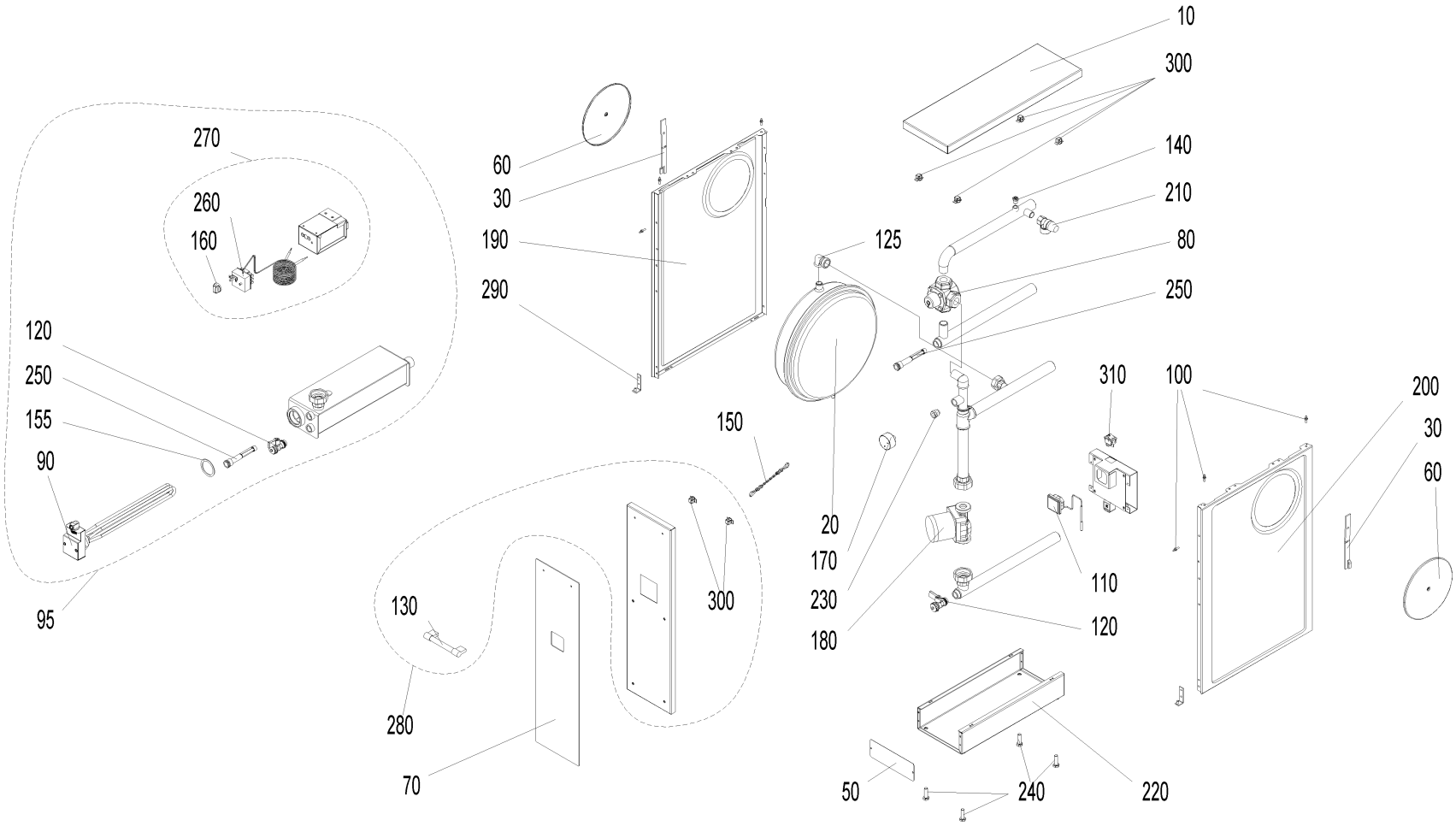
270
260
160
120
250
155
90
95
60
30
190
290
150
130
280
70
300
125
20
170
230
180
10
300
140
210
80
250
310
110
120
100
200
30
60
50
240
220

Item no.	Article no.	Description	Serialnumber from	Serialnumber to
10	083127	ASN037 Cover plate (662x302x1,25mm) for ASN, fittings cabinet Vesto 200	0	9999999999999999
20	003611	OEX101 DGN-10l expansion tank, ½" for OE/KN,OEX,GKA,ASN/E, fittings cabinet Vesto 200	0	9999999999999999
30	080098	KSN0341 Fastening clip for dummy washer for HN,KSN,ASN/E, fittings cabinet Vesto 200	0	9999999999999999
50	065471	ASN026, VESTO200 Cover for base for ASN/E, fittings cabinet Vesto 200	0	9999999999999999
60	049567	Blind disc white	0	9999999999999999
60	049568	Blind disc grey	0	9999999999999999
70	046833	VESTO031 Decorative trim, dark brown for fittings room Vesto 200	0	9999999999999999
70	046834	VESTO030 Decorative trim, signal white for fittings cabinet Vesto 200	0	9999999999999999
70	046926	VESTO032 Decorative trim, stainless steel for fittings cabinet Vesto 200	0	9999999999999999
80	004448	ASN060 3-way mixing valve 3/4“ for ASN/E,NBR,fittings cabinet Vesto 200	0	9999999999999999
90	505087	NB-087 Electric heating insert 6.0 kW for PSX707B,ASE,fittings cabinet Vesto 200	0	9999999999999999
95	505003	ASE060 Electric heater (for installation in the system) with optional connection for 2kW/230 V,4kW/400 V,6kW/400 V	0	9999999999999999
100	000191	KSL029 Forming screw, diameter 8x26/M5 for NBS,OEX,ASN,PMX,fittings cabinet Vesto 200, VarioWIN	0	9999999999999999
110	004049	KSN027 Thermometer Z.Nr.SK 2014 IFC 52-052 KRF for ZHN,OEX,KSN,ASN,NBE,VestoWIN Premium 200-202, VestoWIN Klassik 170-220, fitting	0	9999999999999999
120	004385	KFE cock	0	9999999999999999
125	012534	de: Knie Nr.95T,1/2" schwarz	0	9999999999999999
130	010028	Handle 149 for VestoWIN Premium 200-202, fittings room Vesto 200	0	9999999999999999
140	001058	ASL001 Manually operated bleeder VFR 1/4“ for OE/KN/M,GKX,ASN,ASL,OEX, MIRA, fittings cabinet Vesto 200, VarioWIN, FireWIN	0	9999999999999999
150	004723	OEX881 Chain for OEX,NBE,GKX,ASN, fittings room Vesto 200	0	9999999999999999
155	018678	NBR1001 Seal ring R 1 1/2" electric heating for AccuWIn, AccuWIN Solar	0	9999999999999999
160	012041	Knob PO 395	0	9999999999999999
170	001066	ASL002 Pressure gauge TYP101 Ø50 for OEX,OE/KN/M,GKW,ASN,ASL,GKX,GKA/E,MIRA,FireWIN,VarioWIN,fittings cabinet Vesto 200	0	9999999999999999
180	006422	Pump ALPHA2 25-60 130mm	0	9999999999999999
190	049562	Side panel left signal white VEK170-220,VEP200-202,VESTO200	0	9999999999999999
190	049564	Side panel left / grey	0	9999999999999999
200	049563	Side panel right / white	0	9999999999999999
200	049566	Side panel right / grey	0	9999999999999999
210	001031	ASL004 Safety valve 1/2“ 2.5 bar for GWX,OEX,OE/KN/M,ASL,GKW,GTX,ASN,GKA/E,MIRA,FireWIN,Vesto Art.Nr.:49292, VarioWIN, fittings ca	0	9999999999999999
220	083399	ASN025,VESTO200 Base für ASN/E, fittings cabinet Vesto 200	0	9999999999999999
230	010286	ASL0021 Shut-off valve 1/4“ internal for pressure gauge R1/2“ for ASL/M,ÖR,SH,OEM,OEN,GTX,ASN,OEX,MIRA,FireWIN,fittings cabinet Ve	0	9999999999999999
240	016713	ASN0251 Hexagon screw M10x35, DIN 933 for SilvaWIN, BioWIN XL 35-60, fittings cabinet Vesto 200	0	9999999999999999
250	000027	KSL332 Immersion sleeve 130 mm long for KSL/ZHL,GKA/E,fittings cabinet Vesto200, VarioWIN	0	9999999999999999
260	009083	NB-9341 Thermostat, 3-pin for ASN,NBS/L/R/K,EKL,fittings cabinet Vesto 200	0	9999999999999999
270	075310	ASN043 Thermostat box cpl. (incl. thermostat and knob) for ASE, fittings cabinet Vesto 200	0	9999999999999999
280	047578	Door dark grey for fittings room Vesto 200	0	9999999999999999
290	083739	ASN061 Door bearing cpl. galvanised (75x16x3) for ASN/E, fittings cabinet Vesto 200	0	9999999999999999
300	000507	KSL022 Door catch GP3-78/444, No.300.223 for NBS,ASL/N,OEN/M/X,ZHL,KSL,PMX,OKN/M,OKE/S, fittings cabinet Vesto 200	0	9999999999999999
310	005638	ASL010 Rocker switch blk./gr. 0-1 82.06.11.63.65 for OKE/S,FKV,ASL/N,GKW,NBS/L,E/SKX,GWX,FAX,GKX,GMX,SilvaWIN,fittings cabinet Ve	0	9999999999999999

Air control PL (A000159)

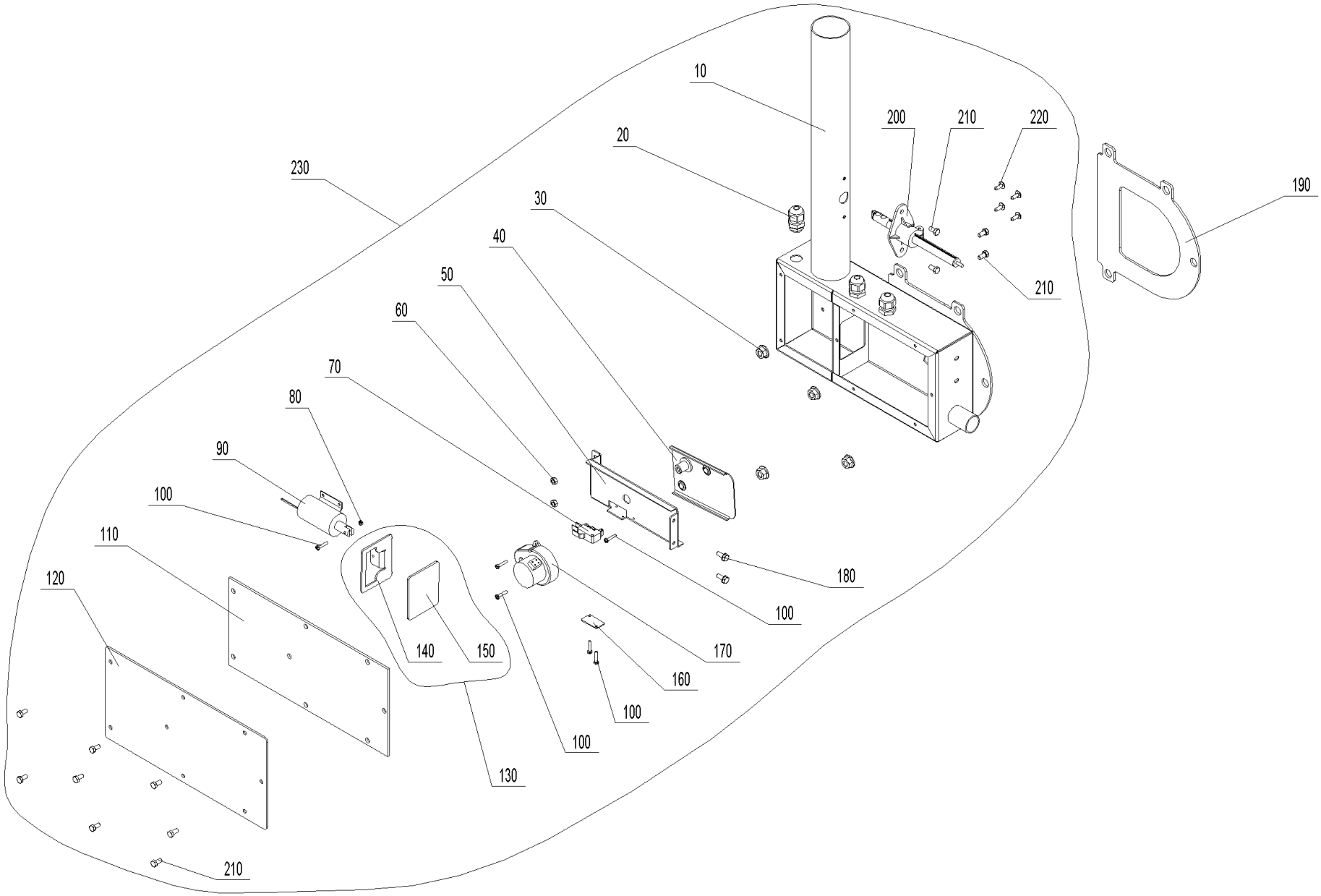

Air control PL (A000159)

Item no.	Article no.	Description	Quantity	Unit
70	009277	Air control microswitch	1.00	pcs
220	018139	Cylinder screw 4.2x13 DIN7981SP (not illustrated)	4.00	pcs
140	052885	de: Absperrpl. PW24-60	1.00	pcs
130	054578	de: Absperrplatte kpl. PW24-60	1.00	pcs
50	052884	de: Befestigungsblende PW24-60	1.00	pcs
120	052881	de: Deckel Luftschacht PW24-60	1.00	pcs
150	052886	de: Dichtung Absperrplatte PW24-60	1.00	pcs
110	052882	de: Dichtung Deckel Luftschacht PW24-60	1.00	pcs
190	052890	de: Dichtung Flansch Luftschacht PW24-60	1.00	pcs
40	053649	de: Luftklappe PW24-60	1.00	pcs
230	052893	de: Luftregelung kpl. PW24-60	1.00	pcs
10	052891	de: Luftschacht kpl. PW24-60	1.00	pcs
170	009579	de: Motor - Luftklappen PW24-60	1.00	pcs
160	051044	de: Platte Mikroschalter PW24-60	1.00	pcs
200	052878	de: Strömungsmessumformer PW24-60	1.00	pcs
100	016766	de: Zyl.-Schrauben M3x16 verz.m.KS. DIN 7985	6.00	pcs
90	052911	de: Zylindermagnet PW24-60	1.00	pcs
80	016551	Hexagon nut M3 DIN 934	1.00	pcs
60	017035	Hexagon nut M5 DIN 934	2.00	pcs
30	016553	Hexagon nut M8 with flange and gearing	4.00	pcs
180	031545	Hexagon screw M5x12 DIN 7500 (not ilustrated)	2.00	pcs
210	017020	Hexagon screw Niro DIN 933 - M5x12 - A2 for HMX, FireWIN, VarioWIN	12.00	pcs

Air control PL (A000159)

Item no.	Article no.	Description	Quantity	Unit
20	006340	Mount connections PG9	3.00	pcs

Air control SL/TL (A000161)

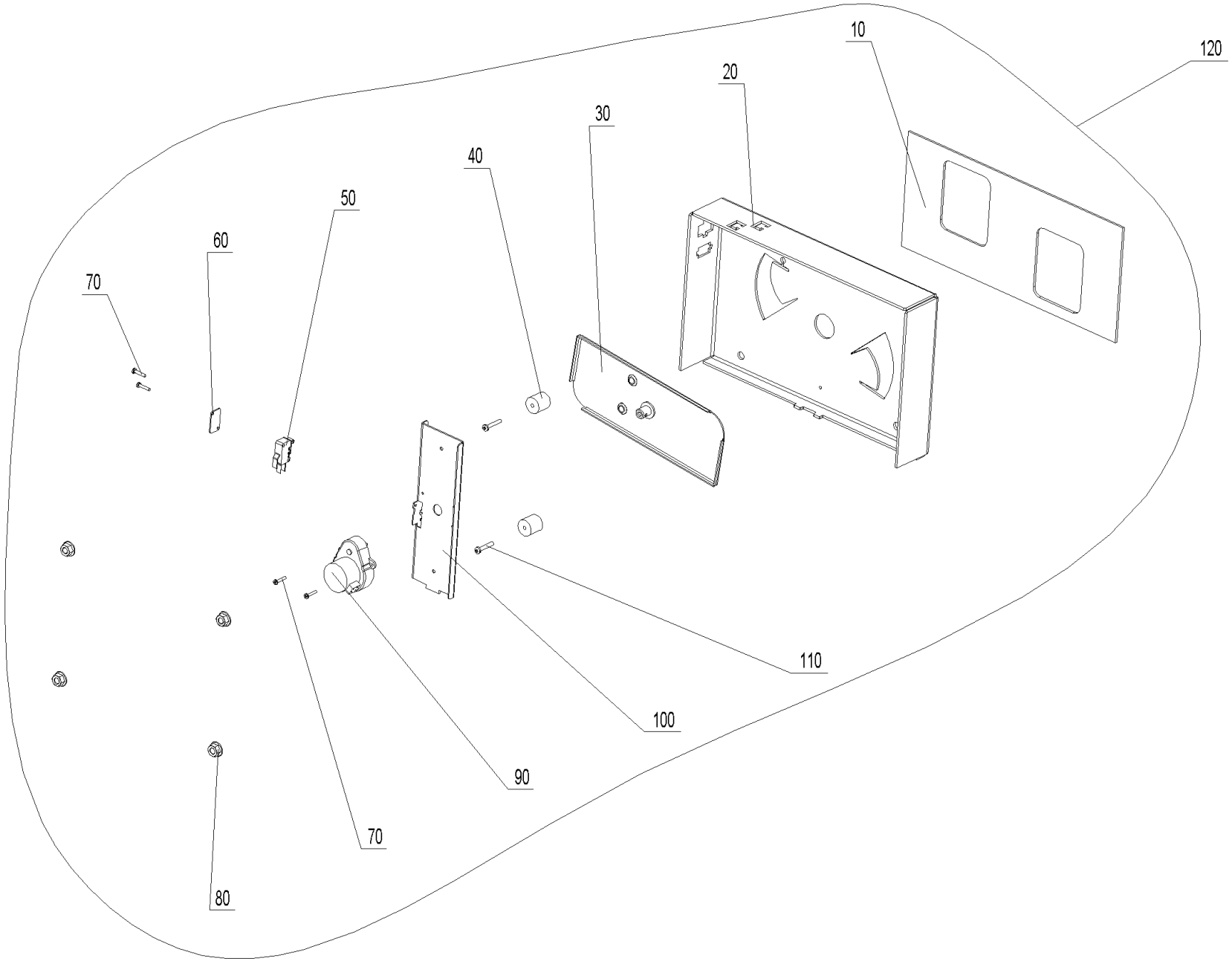

Air control SL/TL (A000161)

Item no.	Article no.	Description	Quantity	Unit
50	009277	Air control microswitch	1.00	pcs
40	053829	de: Abstandswelle PW 24-60	2.00	pcs
100	052899	de: Befestigungsblech Stellmotor PW24-60	1.00	pcs
10	052900	de: Dichtung Luftregelung S/T PW24-60	1.00	pcs
20	052897	de: Konsole Luftregelung PW24-60	1.00	pcs
30	053648	de: Luftklappe PW24-60	1.00	pcs
120	052896	de: Luftregelung kpl. PW24-60	1.00	pcs
90	009579	de: Motor - Luftklappen PW24-60	1.00	pcs
60	051044	de: Platte Mikroschalter PW24-60	1.00	pcs
70	016766	de: Zyl.-Schrauben M3x16 verz.m.KS. DIN 7985	4.00	pcs
110	016802	de: Zyl.-Schrauben M4x25 verz.m.KS DIN 7985	2.00	pcs
80	016553	Hexagon nut M8 with flange and gearing	4.00	pcs

Ash conveyor (A000154)

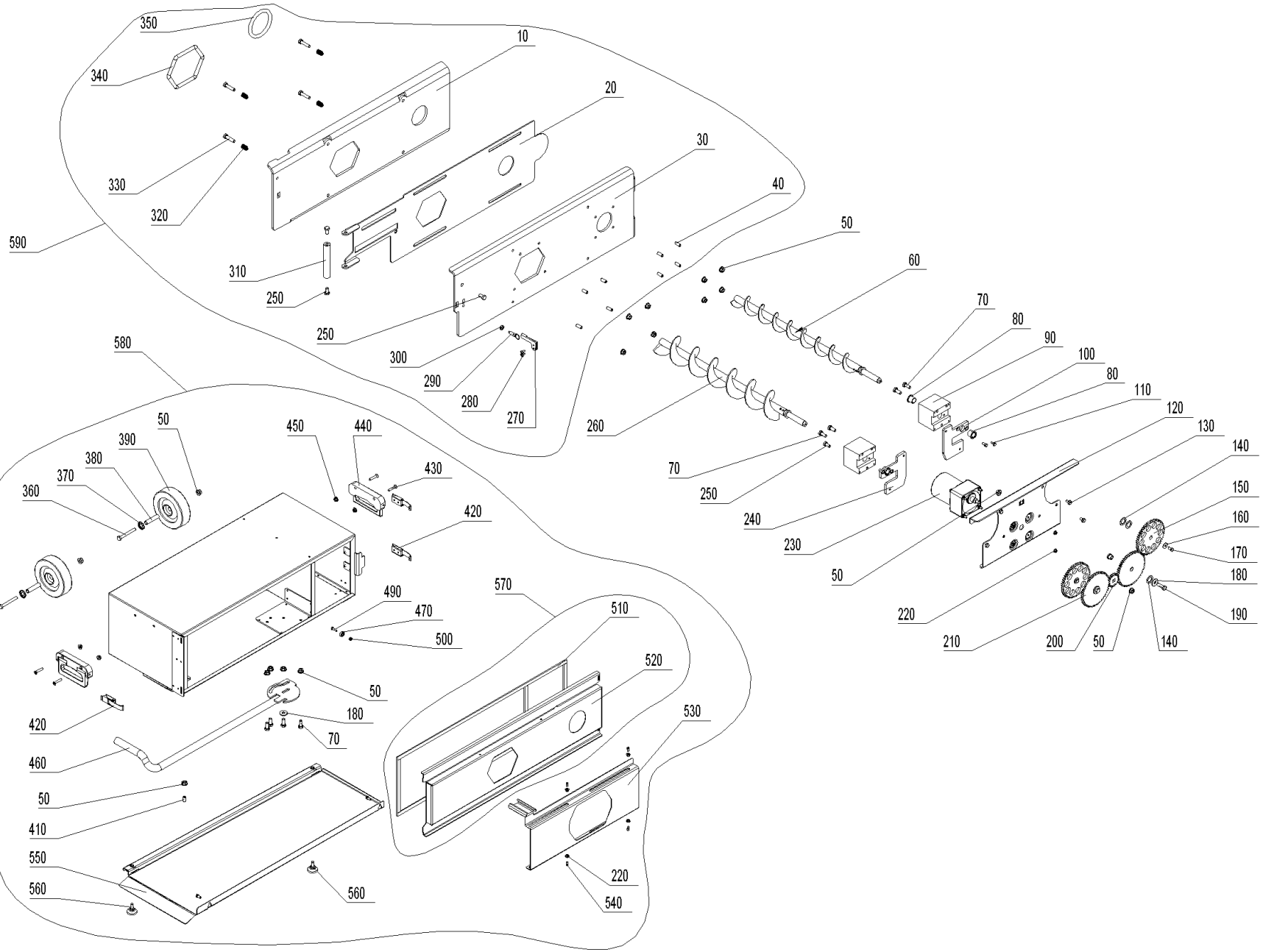

Ash conveyor (A000154)

Item no.	Article no.	Description	Quantity	Unit
90	044680	Ash removal flange, complete with bearing bushes for BioWIN 10-26 (Only BioWIN Exklusiv), BioWIN XL 35-60	2.00	pcs
230	050901	Auger motor SPG	1.00	pcs
280	018140	Cylinder screw 4.2x13 DIN7981ST (not illustrated)	2.00	pcs
370	054574	de: Achsenklemmring ohne Kappe 12mm FDST brüniert	2.00	pcs
270	053993	de: Arretierungslasche PW24-60	1.00	pcs
60	052193	de: Ascheaustragung Schnecke hinten kpl. PW24-60	1.00	pcs
260	052217	de: Ascheaustragung Schnecke vorne kpl. PW24-60	1.00	pcs
570	054576	de: Aschebox Deckel kpl. PW24-60	1.00	pcs
520	054493	de: Aschebox Deckel PW24-60	1.00	pcs
30	053990	de: Ascheboxflansch PW24-60	1.00	pcs
590	053994	de: Ascheboxflansch PW24-60	1.00	pcs
460	054471	de: Aschebox Griff PW24-60	1.00	pcs
380	054490	de: Aschebox Lagerrohr PW24-60	2.00	pcs
550	054485	de: Aschebox Sockel PW24-60	1.00	pcs
530	054494	de: Aschebox Verschluß PW24-60	1.00	pcs
10	053992	de: Dichtblech Ascheboxflansch PW24-60	1.00	pcs
350	053998	de: Dichtung AAT hinten PW24-60	1.00	pcs
340	052375	de: Dichtung AAT vorne PW24-60	1.00	pcs
510	054571	de: Dichtung Aschelade PW24-60	1.00	pcs
320	053997	de: Druckfeder	4.00	pcs
240	051169	de: Flanschplatte links AAT PW24-60	1.00	pcs
100	052371	de: Flanschplatte rechts AAT PW24-60	1.00	pcs

Ash conveyor (A000154)

Item no.	Article no.	Description	Quantity	Unit
40	033536	de: Gewindestift M8 x 20 VZ, DIN 913	8.00	pcs
440	054570	de: Griff	2.00	pcs
310	053995	de: Griff Aschelade PW24-60	1.00	pcs
120	052197	de: Konsole AAT PW24-60	1.00	pcs
580	052700	de: PW9 Aschebox zu Hackgut-Vergaser	1.00	pcs
470	053906	de: Rillenkugellager	2.00	pcs
140	047545	de: Scheibe D25/16,2x1,5 verz.	6.00	pcs
20	053991	de: Schieber Ascheboxflansch PW24-60	1.00	pcs
330	031550	de: Sechskantschraube DIN 931 - M8x35 - 8.8 - verzinkt	4.00	pcs
490	015025	de: Sechskantschraube DIN 933 - M5x16 - 8.8 - verzinkt	2.00	pcs
360	033093	de: Sechskantschraube DIN 933 - M8x65 - 8.8	2.00	pcs
430	054573	de: Senkschraube M6x30 DIN965	4.00	pcs
210	052195	de: Stirnrad Getriebe PW24-60	2.00	pcs
200	052372	de: Stirnrad Motor PW24-60	1.00	pcs
150	052196	de: Stirnrad Schnecke PW24-60	2.00	pcs
540	033092	de: Zapfenschrauben M5X5	4.00	pcs
160	031753	Disc 6 ISO 7093	2.00	pcs
180	031755	Disc 8 ISO 7093	3.00	pcs
80	012508	Friction bearing with connector	4.00	pcs
220	016565	Hexagon nut M5 with flange and gearing (not illustrated)	8.00	pcs
300	016659	Hexagon nut M8 DIN434	1.00	pcs
50	016553	Hexagon nut M8 with flange and gearing	17.00	pcs

Ash conveyor (A000154)

Item no.	Article no.	Description	Quantity	Unit
450	016566	Hexagon nut with flange and gearing M6	4.00	pcs
70	017873	Hexagon screw DIN 933 - M8x20 - A2 for VarioWIN, FireWIN	8.00	pcs
110	031545	Hexagon screw M5x12 DIN 7500 (not ilustrated)	4.00	pcs
170	017051	Hexagon screw M6x12 DIN 933 (not illustrated)	2.00	pcs
130	031549	Hexagon screw M6x12 DIN 7500	4.00	pcs
250	017872	Hexagon screw M8x16, DIN 933 for BioWIN XL 35-60	4.00	pcs
190	017191	Hexagon screw M8x25 DIN 933	2.00	pcs
560	009991	Leg - JTLO 38 - M8x16 for VarioWIN	2.00	pcs
290	007191	Locking bolt with pull ring GN 717-5-M8-A-ST	1.00	pcs
500	016727	Lock nut M5	2.00	pcs
410	051836	Spring-loaded pressure piece M8	0.00	pcs
420	009546	Spring lock	3.00	pcs
390	006888	Wheel AG 125-12	2.00	pcs

Ash removal (A000149)

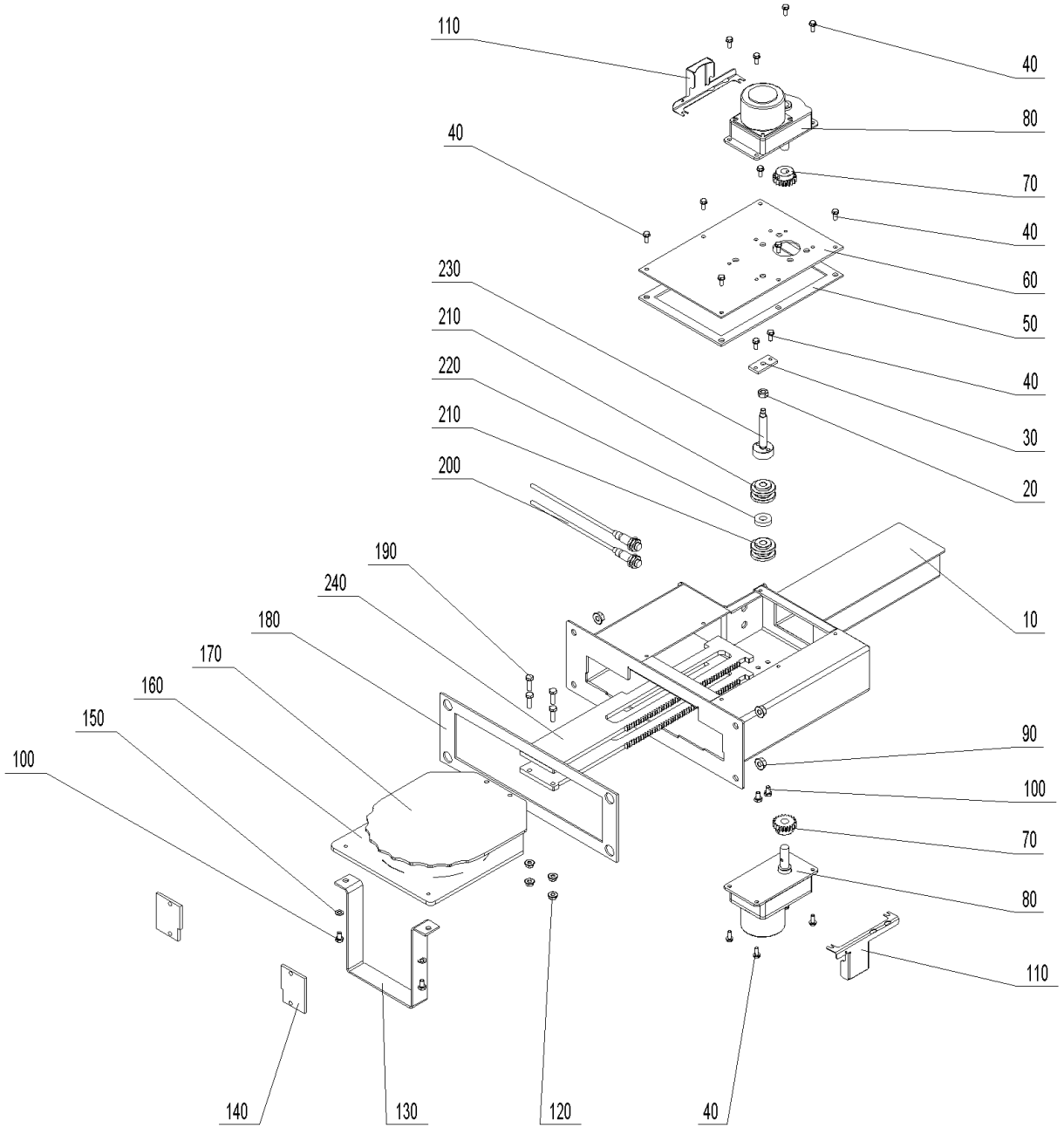

Ash removal (A000149)

Item no.	Article no.	Description	Quantity	Unit
210	007125	Bearing for vibrating drive	4.00	pcs
160	052162	de: Ascheschieber PW24/30	1.00	pcs
130	052907	de: Ascheverdrängblech PW24-60	1.00	pcs
60	052148	de: Deckel oben Entaschung PW24-60	1.00	pcs
50	052151	de: Dichtung Deckel Entaschung PW24-60	1.00	pcs
180	052152	de: Dichtung Fl. Entaschung PW24-60	1.00	pcs
220	052149	de: Distanzscheibe PW24-60	1.00	pcs
140	052904	de: Führungsplatte Entaschung PW24/30	2.00	pcs
170	052158	de: Glutbettschieber PW24/30	1.00	pcs
110	054167	de: Kabelabdeckung Motor PW24-60	2.00	pcs
10	052140	de: Konsole Entaschung PW24-60	1.00	pcs
30	052150	de: Lagerungsblech PW24-60	1.00	pcs
80	053641	de: Motor - Entaschung zu PuroWIN	1.00	pcs
200	007657	de: Näherungsschalter M12 induktiv mit Mate-N-Lok-Stecker PuroWIN	1.00	pcs
150	031713	de: Scheibe ISO 7089 - 6 - A2	2.00	pcs
70	052154	de: Stirnrad PW24-60	2.00	pcs
230	052153	de: Welle Lagerung PW24-60	1.00	pcs
240	053650	de: Zahnstange oben PW24/30	2.00	pcs
90	016553	Hexagon nut M8 with flange and gearing	4.00	pcs
120	016566	Hexagon nut with flange and gearing M6	4.00	pcs
100	015026	Hexagon screw DIN 933 - M6x10 - 8.8 - galvanised for VarioWIN, FireWIN	6.00	pcs
40	031545	Hexagon screw M5x12 DIN 7500 (not ilustrated)	16.00	pcs

Ash removal (A000149)

Item no.	Article no.	Description	Quantity	Unit
190	015471	Hexagon screw M6x20 DIN 933	4.00	pcs
20	015992	Nut M8 DIN 934 V2 - LogWIN Klassik pellet ready	1.00	pcs

Boiler (A000147)

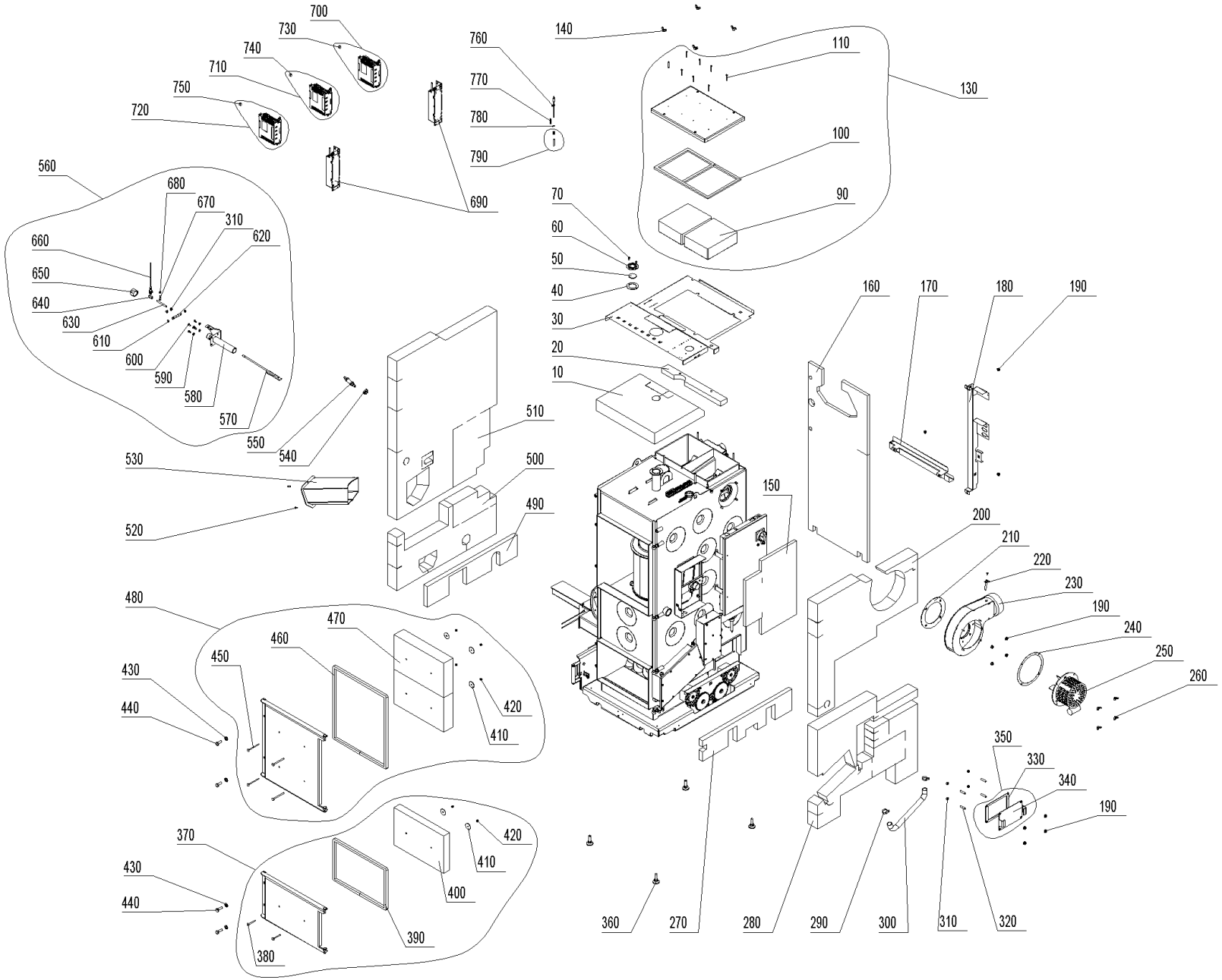

Boiler (A000147)

Item no.	Article no.	Description	Quantity	Unit
210	050825	Blower seal LWK	1.00	pcs
420	016192	Cap nut	6.00	pcs
350	047991	Coasting surface bottom cover for BioWIN XL 35-60	1.00	pcs
770	050647	Combustion chamber sensor spring	1.00	pcs
110	016719	Cylinder drilling screw 4.2 x 38 DIN7504	8.00	pcs
340	047188	de: Abdeckblech BW60, PW	1.00	pcs
250	051039	de: Abgasgebläse kpl. LWK, PW	1.00	pcs
370	054581	de: Aschetür mont. PW24-60	1.00	pcs
390	052378	de: Dichtschnur Ascheür PW24-60	1.00	pcs
460	052381	de: Dichtschnur Heiztür PW24-60	1.00	pcs
330	047190	de: Dichtung Abdeckblende 60BW, PW	1.00	pcs
240	054468	de: Dichtung Gebläsemotor PW24-60	1.00	pcs
100	051868	de: Dichtung Reinigungsdeckel PW24-49	1.00	pcs
40	051712	de: Dichtung Schauloch PW24-60	1.00	pcs
730	054197	de: Eprom auf STOK program. zu FU PuroWIN Zuführung direkt / pneumatisch	1.00	pcs
750	054199	de: Eprom auf TANK program. zu FU PuroWIN Zuführung pneumatisch	1.00	pcs
740	054196	de: Eprom RAS program. zu FU PuroWIN Zuführung direkt	1.00	pcs
710	054847	de: ET-SET: FU mit Eprom RAS zu Zuführung direkt PuroWIN	1.00	pcs
700	054848	de: ET-SET: FU mit Eprom STOK zu Zuführung direkt/pneumatisch PuroWIN	1.00	pcs
720	054849	de: ET-SET: FU mit Eprom TANK zu Zuführung pneumatisch PuroWIN	1.00	pcs
690	054185	de: Filter zu FU, 0,75kW, 1-Phase, PuroWIN	2.00	pcs
140	019414	de: Flügelmutter ähnl. DIN 315 - M8 - St - verzinkt	4.00	pcs

Boiler (A000147)

Item no.	Article no.	Description	Quantity	Unit
570	052176	de: Fühler kpl. PW24/30	1.00	pcs
570	054467	de: Fühler kpl. PW40-60	1.00	pcs
230	053011	de: Gebläsekasten lackiert LWK, PW	1.00	pcs
630	017032	de: Gewindebolzen M8x80 verzinkt	1.00	pcs
50	000307	de: Glasscheibe BOROFLOAT Ø 45/4 mm	1.00	pcs
480	054580	de: Heiztür mont. PW24-60	1.00	pcs
290	029424	de: IDEAL-Schlauchklemmen 22-32mm	2.00	pcs
30	052976	de: Isolierabdeckung oben PW24-60	1.00	pcs
400	052380	de: Isolierstein Aschetür PW24-60	1.00	pcs
470	052384	de: Isolierstein Heiztür PW24-60	2.00	pcs
90	051862	de: Isolierstein NHF links PW24-60	2.00	pcs
160	052732	de: Isolierung hinten oben PW24-60	1.00	pcs
490	053293	de: Isolierung links innen PW24-60	1.00	pcs
510	052774	de: Isolierung links PW24-60	1.00	pcs
500	053295	de: Isolierung links unten PW24-60	1.00	pcs
20	053810	de: Isolierung oben hinten PW24-60	1.00	pcs
10	052977	de: Isolierung oben PW24-60	1.00	pcs
270	053292	de: Isolierung rechts innen PW24-60	1.00	pcs
200	052189	de: Isolierung rechts PW24-60	1.00	pcs
280	053294	de: Isolierung rechts unten PW24-60	1.00	pcs
150	052736	de: Isolierung Schaltfeld PW24-60	1.00	pcs
170	052996	de: Kabelschacht unten PW24-60	1.00	pcs

Boiler (A000147)

Item no.	Article no.	Description	Quantity	Unit
180	052704	de: Kableschacht senkrecht PW24-60	1.00	pcs
650	008850	de: Kappe Nr. 300, 1" schwarz	1.00	pcs
620	052099	de: Level Controll Achse PW24-60	1.00	pcs
580	052734	de: Level Controll Rohr kpl. PW24/30	1.00	pcs
580	052735	de: Level Controll Rohr kpl. PW40-60	1.00	pcs
560	054176	de: Level Control montiert PW24/30	1.00	pcs
560	054175	de: Level Control montiert PW40-60	1.00	pcs
310	031154	de: Mutter M8 - A4	4.00	pcs
800	009185	de: Netzfilter FN2020-10-06 zu PuroWIN	1.00	pcs
130	054579	de: Reinigungsdeckel montiert PW24-60	1.00	pcs
60	087300	de: Rosette für Schauglas	1.00	pcs
300	052989	de: Schlauch Airmetall PU1 PW24-60	1.00	pcs
530	053114	de: Schneckenrohr kpl. PW24/30	1.00	pcs
530	052731	de: Schneckenrohr kpl. PW40-60	1.00	pcs
440	017865	de: Sechskantschraube M12x35 - 8.8	4.00	pcs
610	052174	de: Sicherungsring 12 X 1	2.00	pcs
780	031274	Eyelet M6	1.00	pcs
360	009994	Foot M12X40 JTB38 for HMX, EasyWIN Klassik/Premium 180, LogWIN Premium 180-505	4.00	pcs
680	016594	Hexagon nut M6 DIN 934	1.00	pcs
190	016553	Hexagon nut M8 with flange and gearing	11.00	pcs
670	015041	Hexagon screw DIN 933 - M6x25 - 8.8 - galvanised for VarioWIN, FireWIN	1.00	pcs
70	031545	Hexagon screw M5x12 DIN 7500 (not ilustrated)	2.00	pcs

Boiler (A000147)

Item no.	Article no.	Description	Quantity	Unit
600	017051	Hexagon screw M6x12 DIN 933 (not illustrated)	4.00	pcs
550	051646	Lambda sensor	1.00	pcs
540	007094	Lambda sensor insulating ring for LogWIN Premium 180-505	1.00	pcs
520	020095	M5x16 TT raised countersunk head screw, DIN 7500ME for VestoWIN Premium 200-202, VestoWIN Klassik 170-220	2.00	pcs
640	048554	M8 long nut	1.00	pcs
790	051069	Protective tube for combustion chamber sensor, complete	1.00	pcs
220	041498	Protective tube for exhaust gas sensor	1.00	pcs
660	006832	Proximity switch M12, inductive	1.00	pcs
380	016186	Round-head screw M6x60	2.00	pcs
450	016190	Round-head screw M6x90	4.00	pcs
320	016163	Setscrew DIN913 - M8 x 40-A2 for BioWIN 10-26	4.00	pcs
760	007626	Thermocouple	1.00	pcs
430	017183	U-Washer DIN 125B - M12 - galvanised for VarioWIN, FireWIN, BioWIN XL 35-60	4.00	pcs
590	020540	U-Washer DIN 134 - M6 - galvanised for VarioWIN, FireWIN	4.00	pcs
410	016191	Washer M6 4x40x1,5	6.00	pcs
260	019410	Wing nut M6	4.00	pcs

Cladding (A000148)

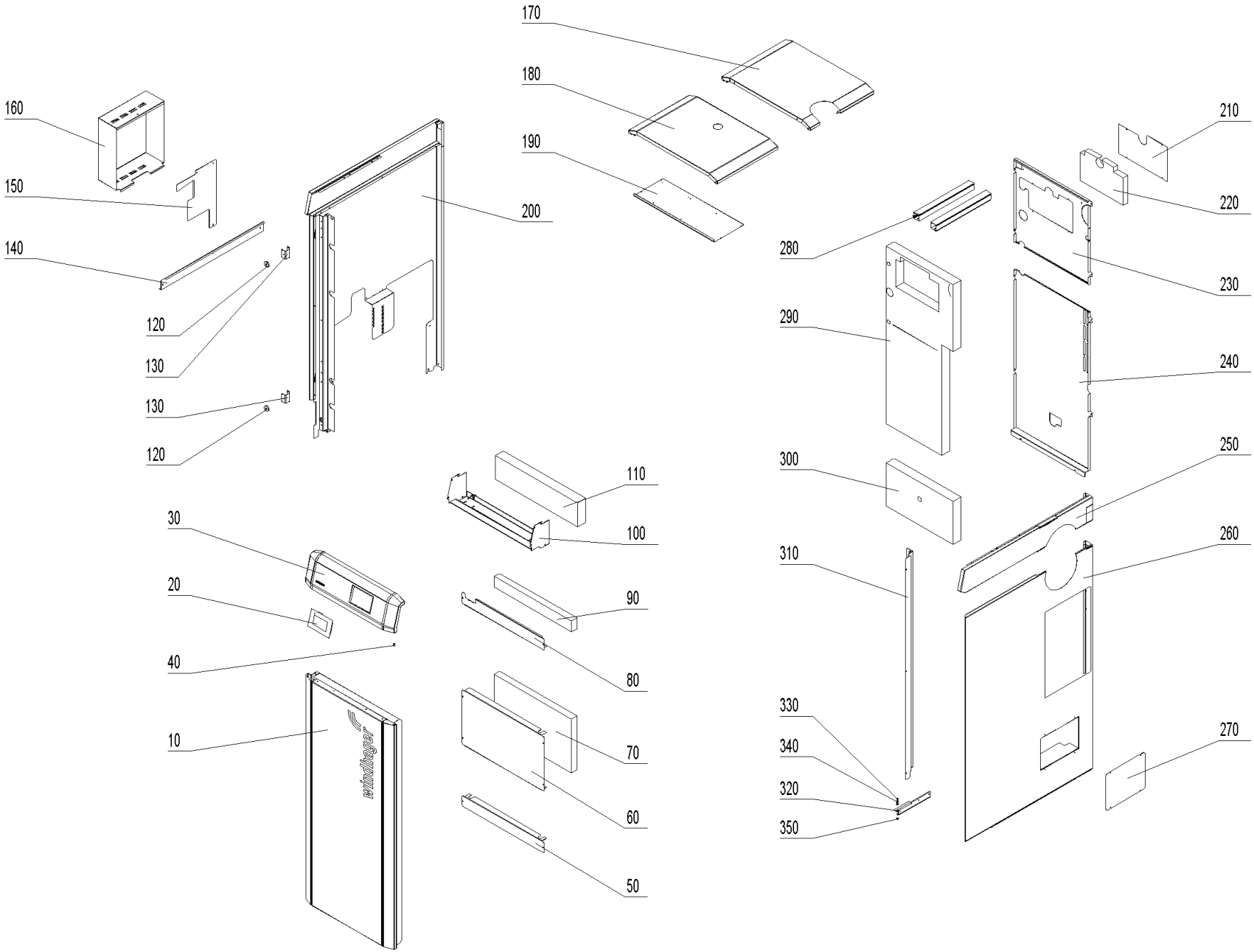

Cladding (A000148)

Item no.	Article no.	Description	Quantity	Unit
160	053812	de: Abdeckung Steckerkonsole PW24-60	1.00	pcs
30	054195	de: Bedienfeld PW	1.00	pcs
100	054163	de: Befestigungsblech Verkleidung PW24-60	1.00	pcs
130	053753	de: Haltebügel Magnet LWPT 18-36	2.00	pcs
190	053813	de: Isolierabdeckung Verbraucherr. PW24-60	1.00	pcs
110	053809	de: Isolierung Bedienfeld PW24-60	1.00	pcs
300	052778	de: Isolierung HFR Gestänge PW24-60	1.00	pcs
220	052776	de: Isolierung HFR oben PW24-60	1.00	pcs
290	052775	de: Isolierung hinten PW24-60	1.00	pcs
70	053297	de: Isolierung vorne mitte PW24-60	1.00	pcs
90	053296	de: Isolierung vorne oben PW24-60	1.00	pcs
120	001761	de: Magnet Ø31 gummiummantelt	2.00	pcs
200	054376	de: Seitenwand links PW24-60	1.00	pcs
150	054162	de: Seitenwand links unten PW24-60	1.00	pcs
270	053814	de: Verkleidung Abdeckung Reinigungsdeckel PW24-60	1.00	pcs
310	052982	de: Verkleidung Abdeckung Seitenwand rechts PW24-60	1.00	pcs
60	052983	de: Verkleidung Abdeckung vorne mitte PW24-60	1.00	pcs
80	052985	de: Verkleidung Abdeckung vorne oben PW24-60	1.00	pcs
50	052984	de: Verkleidung Abdeckung vorne unten PW24-60	1.00	pcs
210	052777	de: Verkleidung Deckel HFR oben PW24-60	1.00	pcs
170	053819	de: Verkleidung Deckel hinten PW24-60	1.00	pcs
180	053818	de: Verkleidung Deckel vorne PW24-60	1.00	pcs

Cladding (A000148)

Item no.	Article no.	Description	Quantity	Unit
230	052787	de: Verkleidung Rückwand oben PW24-60	1.00	pcs
240	051716	de: Verkleidung Rückwand unten PW24-60	1.00	pcs
320	054165	de: Verkleidung Schiene links PW24-60	1.00	pcs
140	054165	de: Verkleidung Schiene links PW24-60	1.00	pcs
250	053822	de: Verkleidung Seitenwand rechts oben PW24-60	1.00	pcs
260	053815	de: Verkleidung Seitenwand rechts PW24-60	1.00	pcs
10	054575	de: Verkleidung Tür kpl. PW24-60	1.00	pcs
280	050978	de: Wand und Deckenkanal BW2, PW	2.00	m
330	033092	de: Zapfenschrauben M5X5	1.00	pcs
340	018309	Disc 5 DIN134	2.00	pcs
40	015507	Dog point screw	1.00	pcs
350	016586	Hexagon nut M5 DIN 934	1.00	pcs
20	001009	INF8 MES INFINITY InfoWIN Touch	1.00	pcs

combustion chamber (A000151)

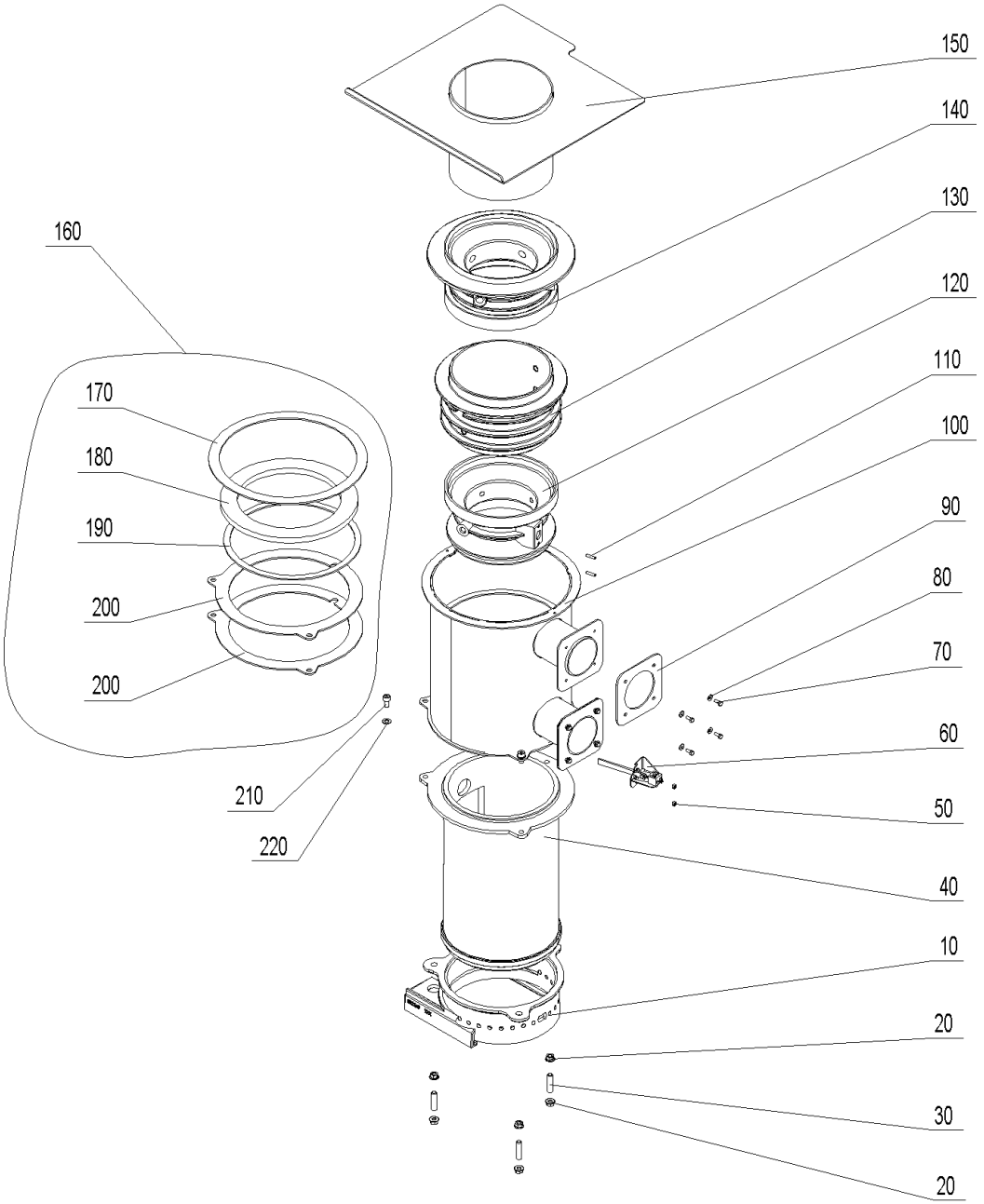

combustion chamber (A000151)

Item no.	Article no.	Description	Quantity	Unit
90	052088	de: Brennerdichtung rechts PW24-60	2.00	pcs
100	052268	de: Brenner kpl. PW24/30	1.00	pcs
200	053645	de: Dichtung Brennerflansch PW24/30	2.00	pcs
180	052275	de: Dichtung Sekundärluft /Tertiärluft PW24/30	1.00	pcs
190	052274	de: Dichtung Sekundärluft PW24/30	1.00	pcs
160	054374	de: Dichtungsset PW24/30	1.00	pcs
170	052276	de: Dichtung Tertiärluft PW24/30	1.00	pcs
110	054158	de: Gewindestifte mit ISK und Kegelkuppe ISO4026/DIN 913 M 5X 20 Edelstahl A2	2.00	pcs
30	052061	de: Gewindestift M10x40 A2	3.00	pcs
10	052263	de: Konus D200 PW24/30	1.00	pcs
130	052278	de: Sekundärluftdüse oben PW24/30	1.00	pcs
120	052277	de: Sekundärluftdüse unten PW24/30	1.00	pcs
60	053336	de: Sekundärluftzündung kpl. mont. PW24-60	1.00	pcs
140	052279	de: Tertiärluftdüse PW24/30	1.00	pcs
40	053599	de: Vergaserrohr 200 PW24/30	1.00	pcs
150	052280	de: Vergaserrohr kpl. PW24/30	1.00	pcs
210	053834	de: Zylinderschraube m. Innensechskant M8 x 20 - A4	3.00	pcs
80	018309	Disc 5 DIN134	8.00	pcs
220	024779	Disc 8 ISO 7089	3.00	pcs
50	017035	Hexagon nut M5 DIN 934	2.00	pcs
20	016567	Hexagon nut M10 with flange and gearing (not illustrated)	6.00	pcs
70	017020	Hexagon screw Niro DIN 933 - M5x12 - A2 for HMX, FireWIN, VarioWIN	8.00	pcs

Control panel (A000160)

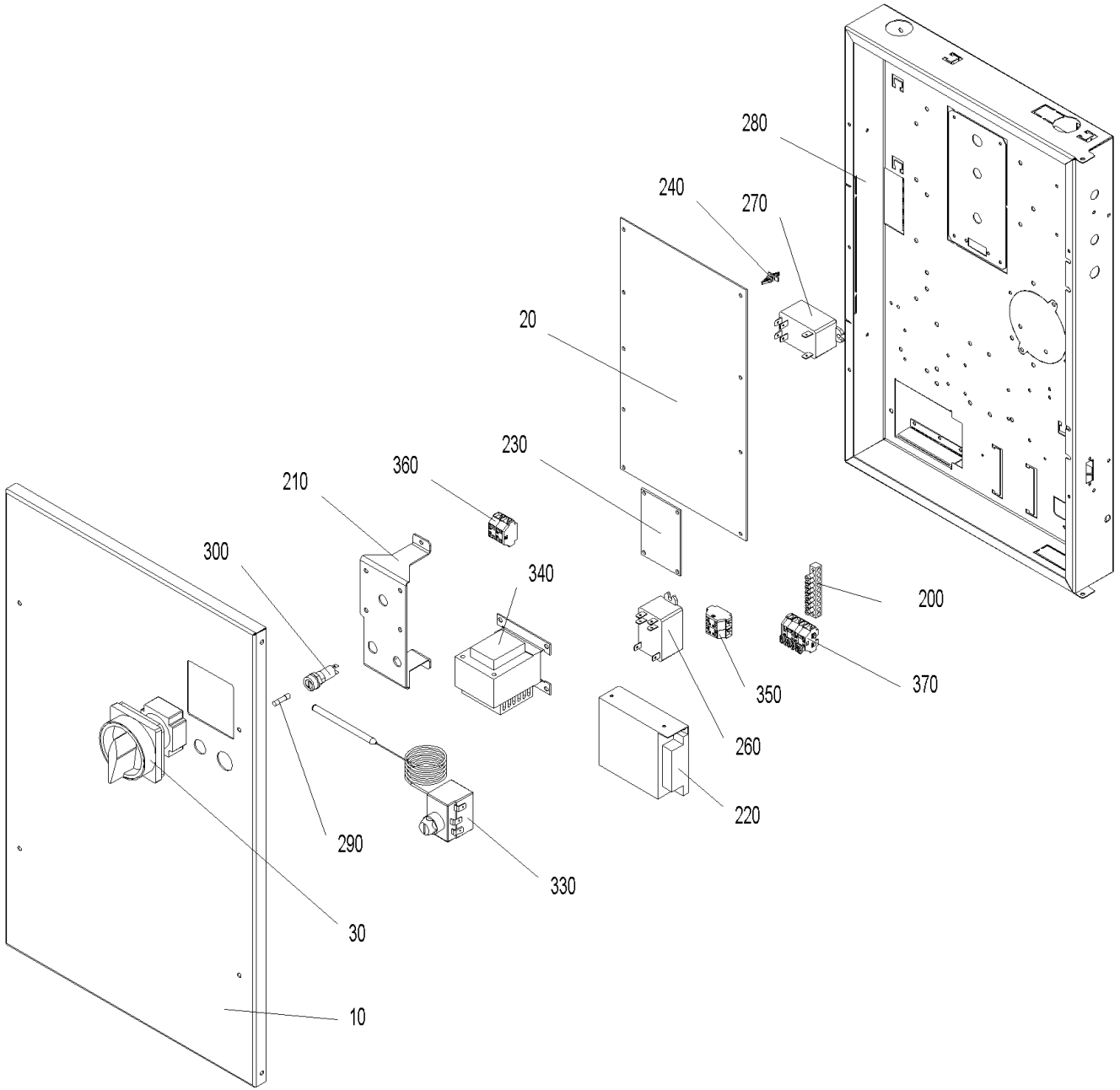

Control panel (A000160)

Item no.	Article no.	Description	Quantity	Unit
290	003228	6.3A fuse (not illustrated)	1.00	pcs
380	018140	Cylinder screw 4.2x13 DIN7981ST (not illustrated)	1.00	pcs
10	053289	de: Deckel Schaltfeld PW24-60	1.00	pcs
20	012007	de: Feuerungsautomat PW	1.00	pcs
30	012010	de: Hauptschalter 2polig 16 A PW	1.00	pcs
145	053326	de: Ka. Primärzündung PW	1.00	pcs
40	053331	de: Kabel 230V Versorgung FU`s + FA2 PW	1.00	pcs
50	053328	de: Kabel Ascheaustragung PW	1.00	pcs
60	054299	de: Kabel Ascherostschieber PW	1.00	pcs
70	054300	de: Kabel Glutbettschieber PW	1.00	pcs
80	053330	de: Kabel Heizflächenreinigung PW	1.00	pcs
90	053318	de: Kabel LON Elektrikeranschluß PW	1.00	pcs
100	053332	de: Kabel LON FA2 + STB PW	1.00	pcs
130	053385	de: Kabel ModBUS Steigschnecke PW	1.00	pcs
110	053335	de: Kabel Motor Ascheschieber PW	1.00	pcs
120	054306	de: Kabel Motor Glutbettschieber PW	1.00	pcs
140	053339	de: Kabel Netz und Heizungsnotschalter PW	1.00	pcs
150	053322	de: Kabel Saugzuggebläse PW	1.00	pcs
160	053323	de: Kabel Sekundärfluftklappe und Schalter Überfüllung PW	1.00	pcs
170	053324	de: Kabel Sekundärzündung PW	1.00	pcs
180	054016	de: Kabel Türschalter kpl. PW	1.00	pcs
190	053338	de: Kabel Versorgung ModBUS FU`s+FA2 PW	1.00	pcs

Control panel (A000160)

Item no.	Article no.	Description	Quantity	Unit
210	053984	de: Konsole Hauptschalter PW24-60	1.00	pcs
220	002053	de: Netzteil 12VDC 2,1A	1.00	pcs
230	012014	de: Platine - Relais PW	1.00	pcs
260	005075	de: Relais 16A AC 2 polig 12V DC Steuerung	1.00	pcs
300	003663	Fuse holder	1.00	pcs
250	007629	Immersion sensor PT 1000 (not illustrated)	1.00	pcs
310	502186	MES009M Immersion sensor	1.00	pcs
240	007609	PCB holder	1.00	pcs
270	005025	Power relay OMRON G7L-2A-BUB 200/240AC for PMX,BioWIN XL, BioWIN10-26,FireWIN,VarioWIN, BioWIN XL 35-60	1.00	pcs
200	009929	Terminal bar MS 8-pin 8x8mm for VarioWIN,FireWIN, BioWIN XL 35-60	1.00	pcs
320	007626	Thermocouple	1.00	pcs
330	005672	Thermostat LS1+100-6U	1.00	pcs
340	007096	Transformer for O2 sensor 18VA for LogWIN Premium 180-505	1.00	pcs
360	006833	Wago terminal block 261; 4-pin "12V GND"	1.00	pcs
350	006834	Wago terminal block 261; 4-pin "safety 1-4"	1.00	pcs
370	007656	Wago terminal block 261; 6-pin	1.00	pcs

Heating surface cleaning (A000155)

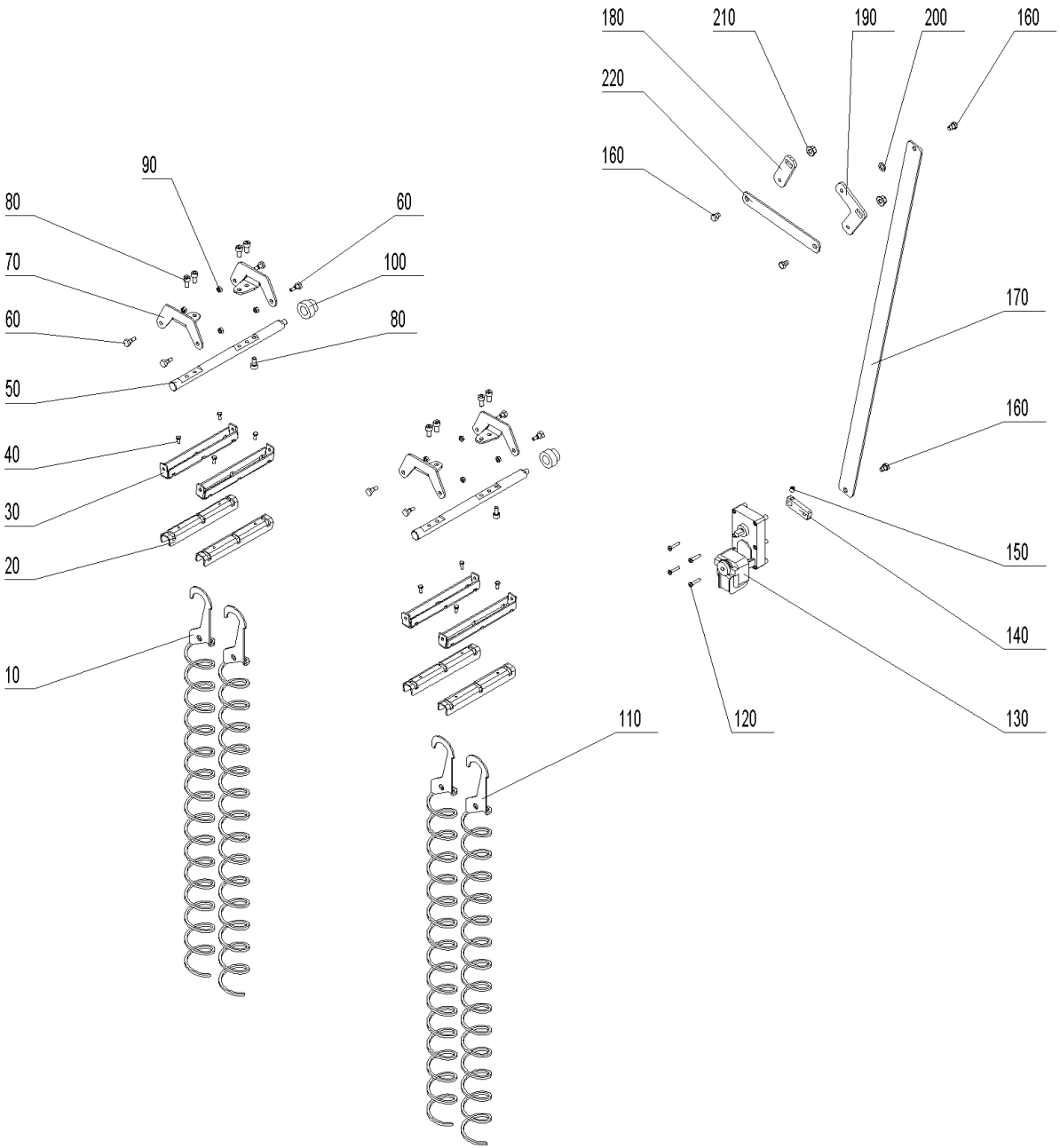

Heating surface cleaning (A000155)

Item no.	Article no.	Description	Quantity	Unit
20	047065	Bottom cleaning profile for BioWIN XL 35-60	4.00	pcs
160	012502	Collar screw	4.00	pcs
120	016837	Cylinder screw M5x25 ISO 7045	4.00	pcs
180	053281	de: Achsenhebel links HFR PW24-60	1.00	pcs
190	053280	de: Achsenhebel rechts HFR PW24-60	1.00	pcs
70	052738	de: Lagerarm für Heizflächenreinigung PW24-60	4.00	pcs
10	052783	de: Reinigungsschnecke kpl. PW24/30	4.00	pcs
140	053282	de: Rüttelhebel Motor HFR PW24-60	1.00	pcs
200	018031	de: Scheibe ISO 7092 - 10 - blank	1.00	pcs
220	052781	de: Verbinder Rüttelachse HFR PW24-60	1.00	pcs
170	053284	de: Verbindung Heizflächenreinigung PW24-60	1.00	pcs
50	052737	de: Welle für Heizflächenreinigung PW24-60	2.00	pcs
80	053102	de: Zylinderschraube m. Innensechskant ISO 4762 - M 8 x 16 - A4 (DIN 912)	10.00	pcs
100	047416	Heating surface cleaning bearing for BioWIN XL 35-60	2.00	pcs
210	016567	Hexagon nut M10 with flange and gearing (not illustrated)	2.00	pcs
40	017020	Hexagon screw Niro DIN 933 - M5x12 - A2 for HMX, FireWIN, VarioWIN	8.00	pcs
130	044665	Motor	1.00	pcs
90	016596	Nut DIN 934 - M6 - A2 for VarioWIN, FireWIN, BioWIN10-26, BioWIN XL 35-60	8.00	pcs
60	006756	Screw M6 for heating surface cleaning for PMX,BioWIN 10-26,FireWIN, BioWIN XL 35-60, LogWIN Premium 180-505	8.00	pcs
150	033112	Setscrew M8x10 DIN916	1.00	pcs
30	047064	Top cleaning profile for BioWIN XL 35-60	4.00	pcs

Ignition (A000158)

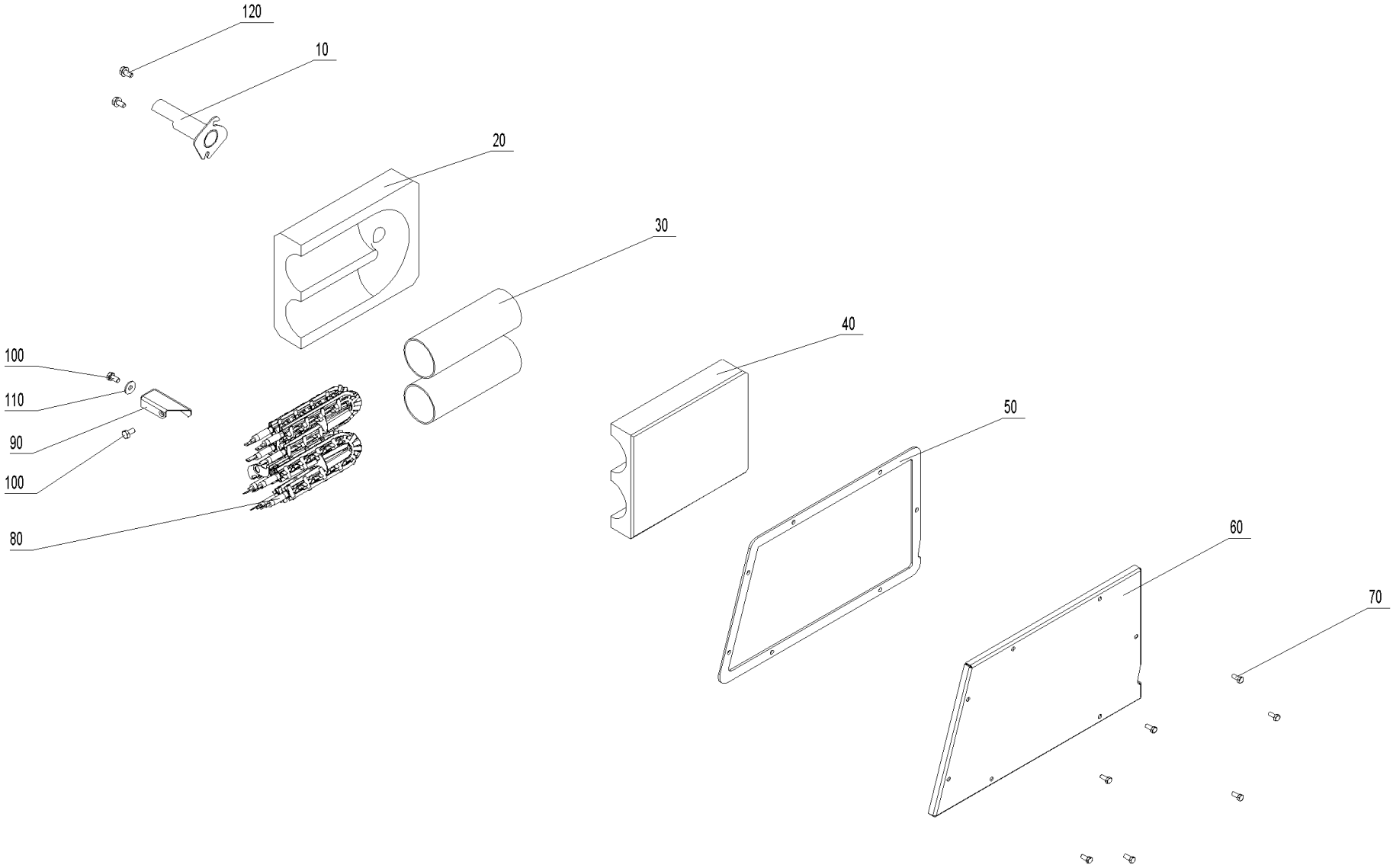

Ignition (A000158)

Item no.	Article no.	Description	Quantity	Unit
60	052717	de: Abdeckung Zündung PW24-60	1.00	pcs
90	052387	de: Anschlag Zündung PW24-60	1.00	pcs
50	052993	de: Dichtung Zündung PW24-60	1.00	pcs
20	052713	de: Isolierstein unten Zündung PW24-60	1.00	pcs
10	052716	de: Zündrohr kpl. PW24/30	1.00	pcs
10	052766	de: Zündrohr kpl. PW40-60	1.00	pcs
110	031753	Disc 6 ISO 7093	1.00	pcs
100	017051	Hexagon screw M6x12 DIN 933 (not illustrated)	2.00	pcs
120	031549	Hexagon screw M6x12 DIN 7500	2.00	pcs
70	017020	Hexagon screw Niro DIN 933 - M5x12 - A2 for HMX, FireWIN, VarioWIN	7.00	pcs
80	055201	Ignition element BioWIN10-26, FireWIN from lot 15, VarioWIN from lot 15 BioWIN XL, LWK	1.00	pcs
30	050489	Ignition tube LWP18-50, LWK	2.00	pcs
40	007484	Insulating stone top for automatic ignition LWP18-50, LWK	1.00	pcs

Air control PL (A000159)

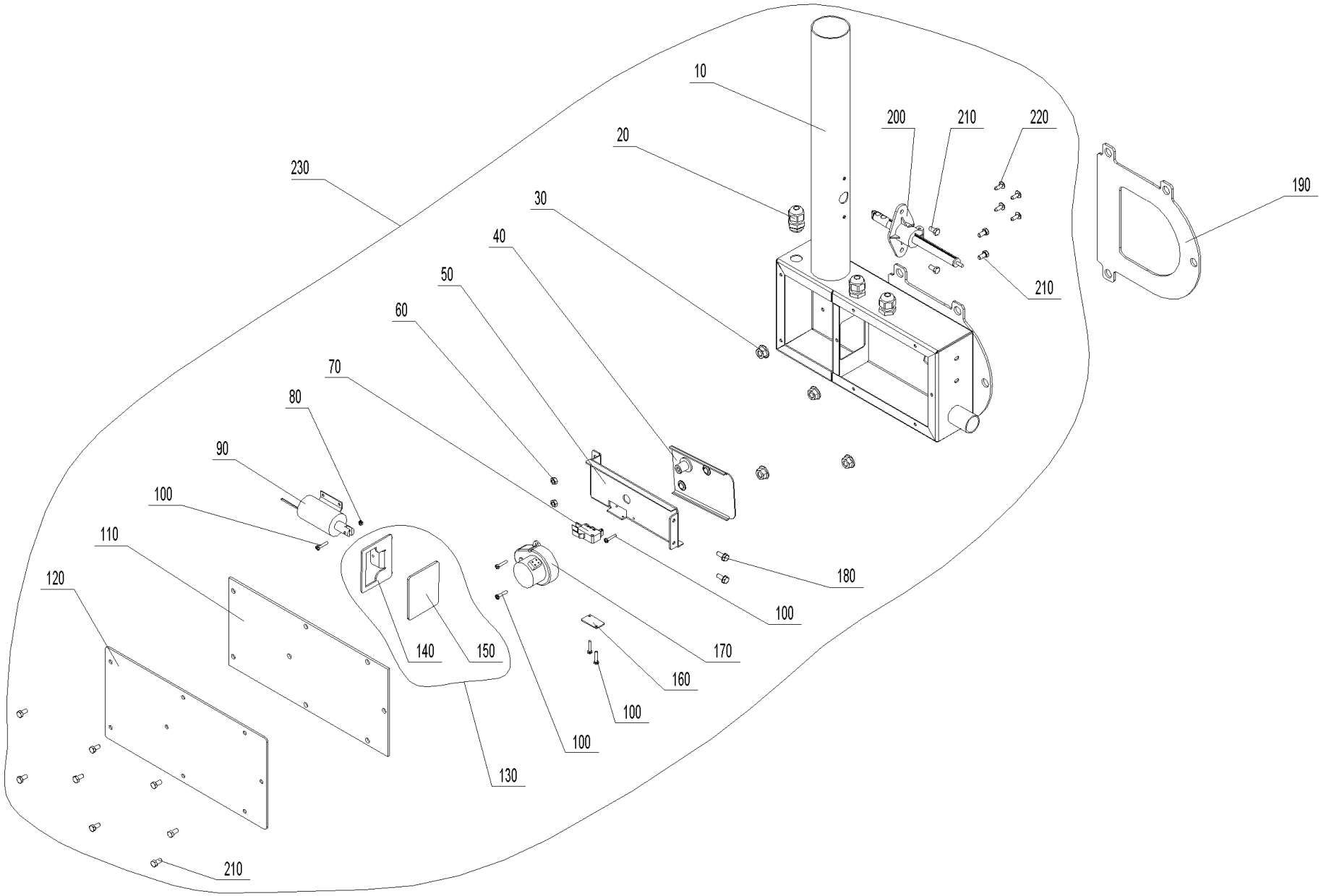

Air control PL (A000159)

Item no.	Article no.	Description	Quantity	Unit
70	009277	Air control microswitch	1.00	pcs
220	018139	Cylinder screw 4.2x13 DIN7981SP (not illustrated)	4.00	pcs
140	052885	de: Absperrpl. PW24-60	1.00	pcs
130	054578	de: Absperrplatte kpl. PW24-60	1.00	pcs
50	052884	de: Befestigungsblende PW24-60	1.00	pcs
120	052881	de: Deckel Luftschacht PW24-60	1.00	pcs
150	052886	de: Dichtung Absperrplatte PW24-60	1.00	pcs
110	052882	de: Dichtung Deckel Luftschacht PW24-60	1.00	pcs
190	052890	de: Dichtung Flansch Luftschacht PW24-60	1.00	pcs
40	053649	de: Luftklappe PW24-60	1.00	pcs
230	052893	de: Luftregelung kpl. PW24-60	1.00	pcs
10	052891	de: Luftschacht kpl. PW24-60	1.00	pcs
170	009579	de: Motor - Luftklappen PW24-60	1.00	pcs
160	051044	de: Platte Mikroschalter PW24-60	1.00	pcs
200	052878	de: Strömungsmessumformer PW24-60	1.00	pcs
100	016766	de: Zyl.-Schrauben M3x16 verz.m.KS. DIN 7985	6.00	pcs
90	052911	de: Zylindermagnet PW24-60	1.00	pcs
80	016551	Hexagon nut M3 DIN 934	1.00	pcs
60	017035	Hexagon nut M5 DIN 934	2.00	pcs
30	016553	Hexagon nut M8 with flange and gearing	4.00	pcs
180	031545	Hexagon screw M5x12 DIN 7500 (not ilustrated)	2.00	pcs
210	017020	Hexagon screw Niro DIN 933 - M5x12 - A2 for HMX, FireWIN, VarioWIN	12.00	pcs

Air control PL (A000159)

Item no.	Article no.	Description	Quantity	Unit
20	006340	Mount connections PG9	3.00	pcs

Air control SL/TL (A000161)

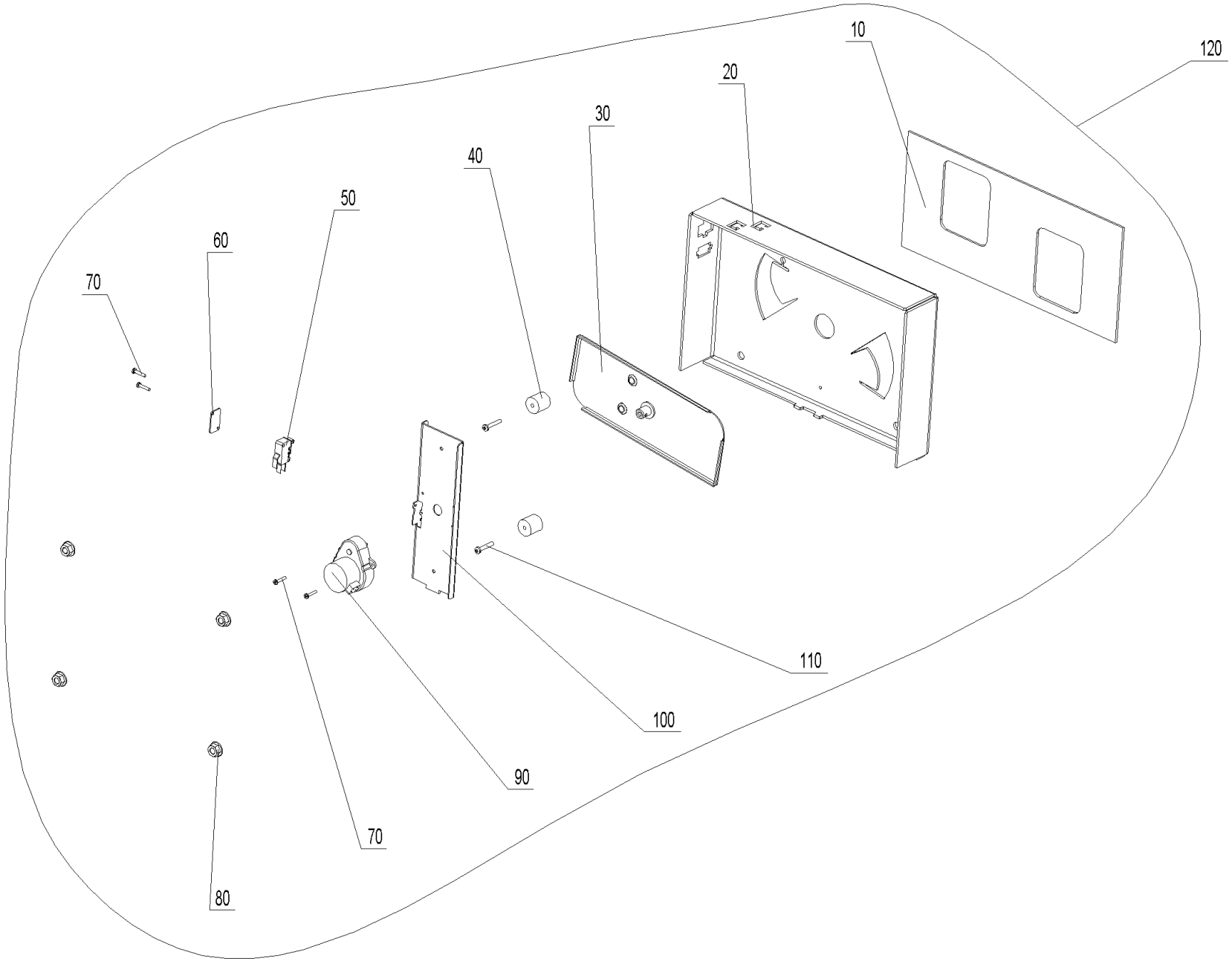

Air control SL/TL (A000161)

Item no.	Article no.	Description	Quantity	Unit
50	009277	Air control microswitch	1.00	pcs
40	053829	de: Abstandswelle PW 24-60	2.00	pcs
100	052899	de: Befestigungsblech Stellmotor PW24-60	1.00	pcs
10	052900	de: Dichtung Luftregelung S/T PW24-60	1.00	pcs
20	052897	de: Konsole Luftregelung PW24-60	1.00	pcs
30	053648	de: Luftklappe PW24-60	1.00	pcs
120	052896	de: Luftregelung kpl. PW24-60	1.00	pcs
90	009579	de: Motor - Luftklappen PW24-60	1.00	pcs
60	051044	de: Platte Mikroschalter PW24-60	1.00	pcs
70	016766	de: Zyl.-Schrauben M3x16 verz.m.KS. DIN 7985	4.00	pcs
110	016802	de: Zyl.-Schrauben M4x25 verz.m.KS DIN 7985	2.00	pcs
80	016553	Hexagon nut M8 with flange and gearing	4.00	pcs

Ash conveyor (A000154)

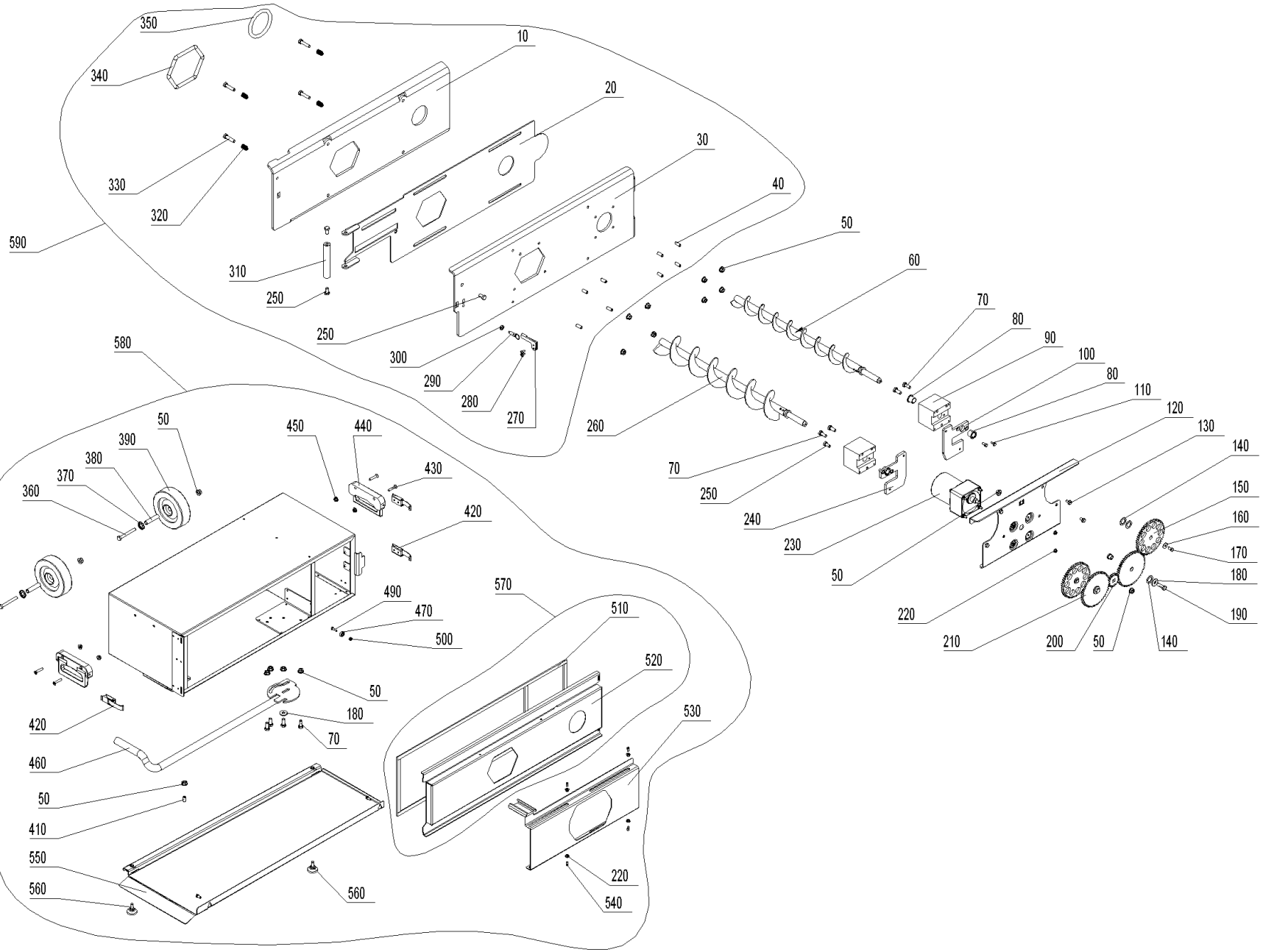

Ash conveyor (A000154)

Item no.	Article no.	Description	Quantity	Unit
90	044680	Ash removal flange, complete with bearing bushes for BioWIN 10-26 (Only BioWIN Exklusiv), BioWIN XL 35-60	2.00	pcs
230	050901	Auger motor SPG	1.00	pcs
280	018140	Cylinder screw 4.2x13 DIN7981ST (not illustrated)	2.00	pcs
370	054574	de: Achsenklemmring ohne Kappe 12mm FDST brüniert	2.00	pcs
270	053993	de: Arretierungslasche PW24-60	1.00	pcs
60	052193	de: Ascheaustragung Schnecke hinten kpl. PW24-60	1.00	pcs
260	052217	de: Ascheaustragung Schnecke vorne kpl. PW24-60	1.00	pcs
570	054576	de: Aschebox Deckel kpl. PW24-60	1.00	pcs
520	054493	de: Aschebox Deckel PW24-60	1.00	pcs
30	053990	de: Ascheboxflansch PW24-60	1.00	pcs
590	053994	de: Ascheboxflansch PW24-60	1.00	pcs
460	054471	de: Aschebox Griff PW24-60	1.00	pcs
380	054490	de: Aschebox Lagerrohr PW24-60	2.00	pcs
550	054485	de: Aschebox Sockel PW24-60	1.00	pcs
530	054494	de: Aschebox Verschluß PW24-60	1.00	pcs
10	053992	de: Dichtblech Ascheboxflansch PW24-60	1.00	pcs
350	053998	de: Dichtung AAT hinten PW24-60	1.00	pcs
340	052375	de: Dichtung AAT vorne PW24-60	1.00	pcs
510	054571	de: Dichtung Aschelade PW24-60	1.00	pcs
320	053997	de: Druckfeder	4.00	pcs
240	051169	de: Flanschplatte links AAT PW24-60	1.00	pcs
100	052371	de: Flanschplatte rechts AAT PW24-60	1.00	pcs

Ash conveyor (A000154)

Item no.	Article no.	Description	Quantity	Unit
40	033536	de: Gewindestift M8 x 20 VZ, DIN 913	8.00	pcs
440	054570	de: Griff	2.00	pcs
310	053995	de: Griff Aschelade PW24-60	1.00	pcs
120	052197	de: Konsole AAT PW24-60	1.00	pcs
580	052700	de: PW9 Aschebox zu Hackgut-Vergaser	1.00	pcs
470	053906	de: Rillenkugellager	2.00	pcs
140	047545	de: Scheibe D25/16,2x1,5 verz.	6.00	pcs
20	053991	de: Schieber Ascheboxflansch PW24-60	1.00	pcs
330	031550	de: Sechskantschraube DIN 931 - M8x35 - 8.8 - verzinkt	4.00	pcs
490	015025	de: Sechskantschraube DIN 933 - M5x16 - 8.8 - verzinkt	2.00	pcs
360	033093	de: Sechskantschraube DIN 933 - M8x65 - 8.8	2.00	pcs
430	054573	de: Senkschraube M6x30 DIN965	4.00	pcs
210	052195	de: Stirnrad Getriebe PW24-60	2.00	pcs
200	052372	de: Stirnrad Motor PW24-60	1.00	pcs
150	052196	de: Stirnrad Schnecke PW24-60	2.00	pcs
540	033092	de: Zapfenschrauben M5X5	4.00	pcs
160	031753	Disc 6 ISO 7093	2.00	pcs
180	031755	Disc 8 ISO 7093	3.00	pcs
80	012508	Friction bearing with connector	4.00	pcs
220	016565	Hexagon nut M5 with flange and gearing (not illustrated)	8.00	pcs
300	016659	Hexagon nut M8 DIN434	1.00	pcs
50	016553	Hexagon nut M8 with flange and gearing	17.00	pcs

Ash conveyor (A000154)

Item no.	Article no.	Description	Quantity	Unit
450	016566	Hexagon nut with flange and gearing M6	4.00	pcs
70	017873	Hexagon screw DIN 933 - M8x20 - A2 for VarioWIN, FireWIN	8.00	pcs
110	031545	Hexagon screw M5x12 DIN 7500 (not ilustrated)	4.00	pcs
170	017051	Hexagon screw M6x12 DIN 933 (not illustrated)	2.00	pcs
130	031549	Hexagon screw M6x12 DIN 7500	4.00	pcs
250	017872	Hexagon screw M8x16, DIN 933 for BioWIN XL 35-60	4.00	pcs
190	017191	Hexagon screw M8x25 DIN 933	2.00	pcs
560	009991	Leg - JTLO 38 - M8x16 for VarioWIN	2.00	pcs
290	007191	Locking bolt with pull ring GN 717-5-M8-A-ST	1.00	pcs
500	016727	Lock nut M5	2.00	pcs
410	051836	Spring-loaded pressure piece M8	0.00	pcs
420	009546	Spring lock	3.00	pcs
390	006888	Wheel AG 125-12	2.00	pcs

Ash removal (A000149)

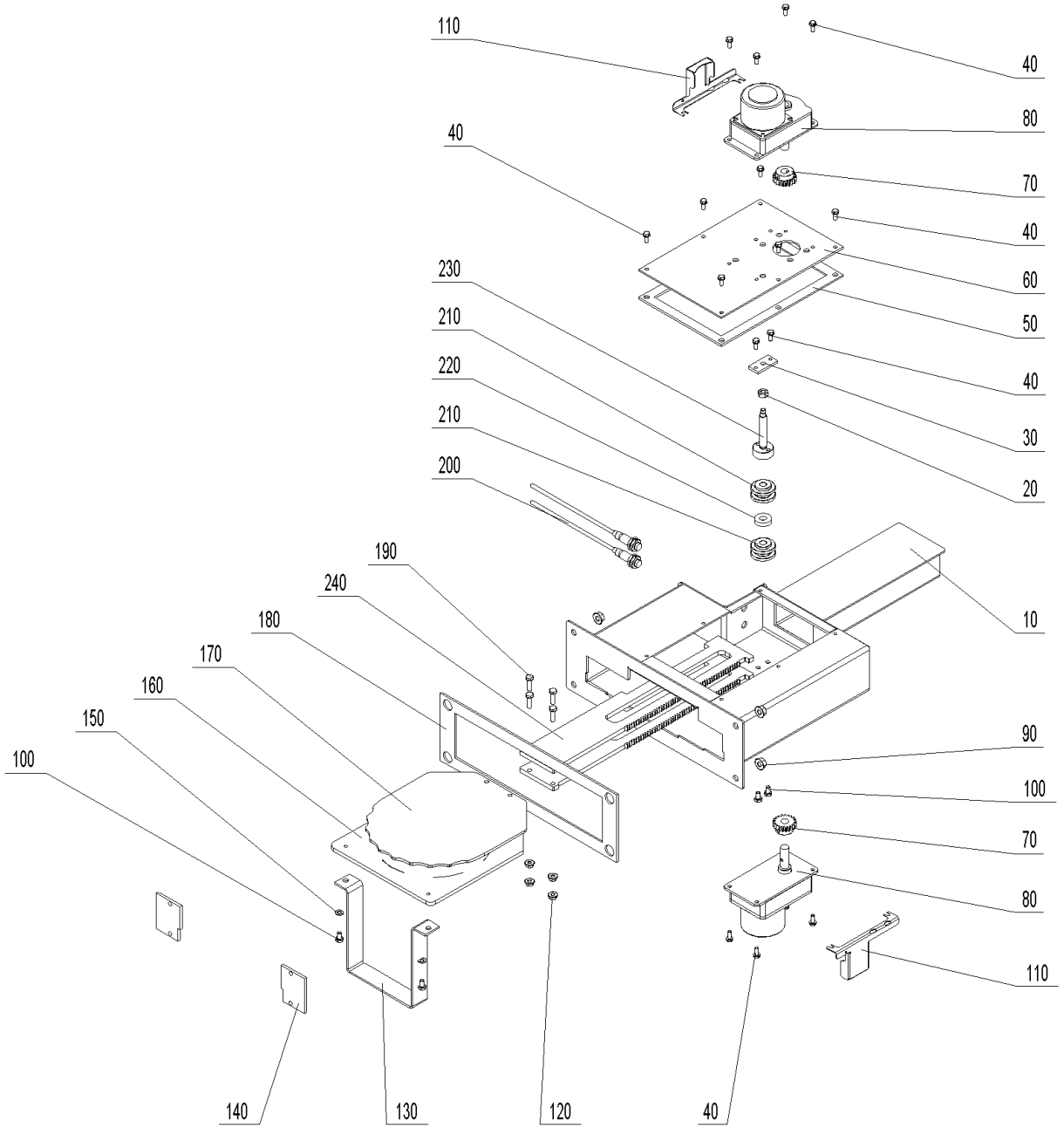

Ash removal (A000149)

Item no.	Article no.	Description	Quantity	Unit
210	007125	Bearing for vibrating drive	4.00	pcs
160	052162	de: Ascheschieber PW24/30	1.00	pcs
130	052907	de: Ascheverdrängblech PW24-60	1.00	pcs
60	052148	de: Deckel oben Entaschung PW24-60	1.00	pcs
50	052151	de: Dichtung Deckel Entaschung PW24-60	1.00	pcs
180	052152	de: Dichtung Fl. Entaschung PW24-60	1.00	pcs
220	052149	de: Distanzscheibe PW24-60	1.00	pcs
140	052904	de: Führungsplatte Entaschung PW24/30	2.00	pcs
170	052158	de: Glutbettschieber PW24/30	1.00	pcs
110	054167	de: Kabelabdeckung Motor PW24-60	2.00	pcs
10	052140	de: Konsole Entaschung PW24-60	1.00	pcs
30	052150	de: Lagerungsblech PW24-60	1.00	pcs
80	053641	de: Motor - Entaschung zu PuroWIN	1.00	pcs
200	007657	de: Näherungsschalter M12 induktiv mit Mate-N-Lok-Stecker PuroWIN	1.00	pcs
150	031713	de: Scheibe ISO 7089 - 6 - A2	2.00	pcs
70	052154	de: Stirnrad PW24-60	2.00	pcs
230	052153	de: Welle Lagerung PW24-60	1.00	pcs
240	053650	de: Zahnstange oben PW24/30	2.00	pcs
90	016553	Hexagon nut M8 with flange and gearing	4.00	pcs
120	016566	Hexagon nut with flange and gearing M6	4.00	pcs
100	015026	Hexagon screw DIN 933 - M6x10 - 8.8 - galvanised for VarioWIN, FireWIN	6.00	pcs
40	031545	Hexagon screw M5x12 DIN 7500 (not ilustrated)	16.00	pcs

Ash removal (A000149)

Item no.	Article no.	Description	Quantity	Unit
190	015471	Hexagon screw M6x20 DIN 933	4.00	pcs
20	015992	Nut M8 DIN 934 V2 - LogWIN Klassik pellet ready	1.00	pcs

Boiler (A000147)

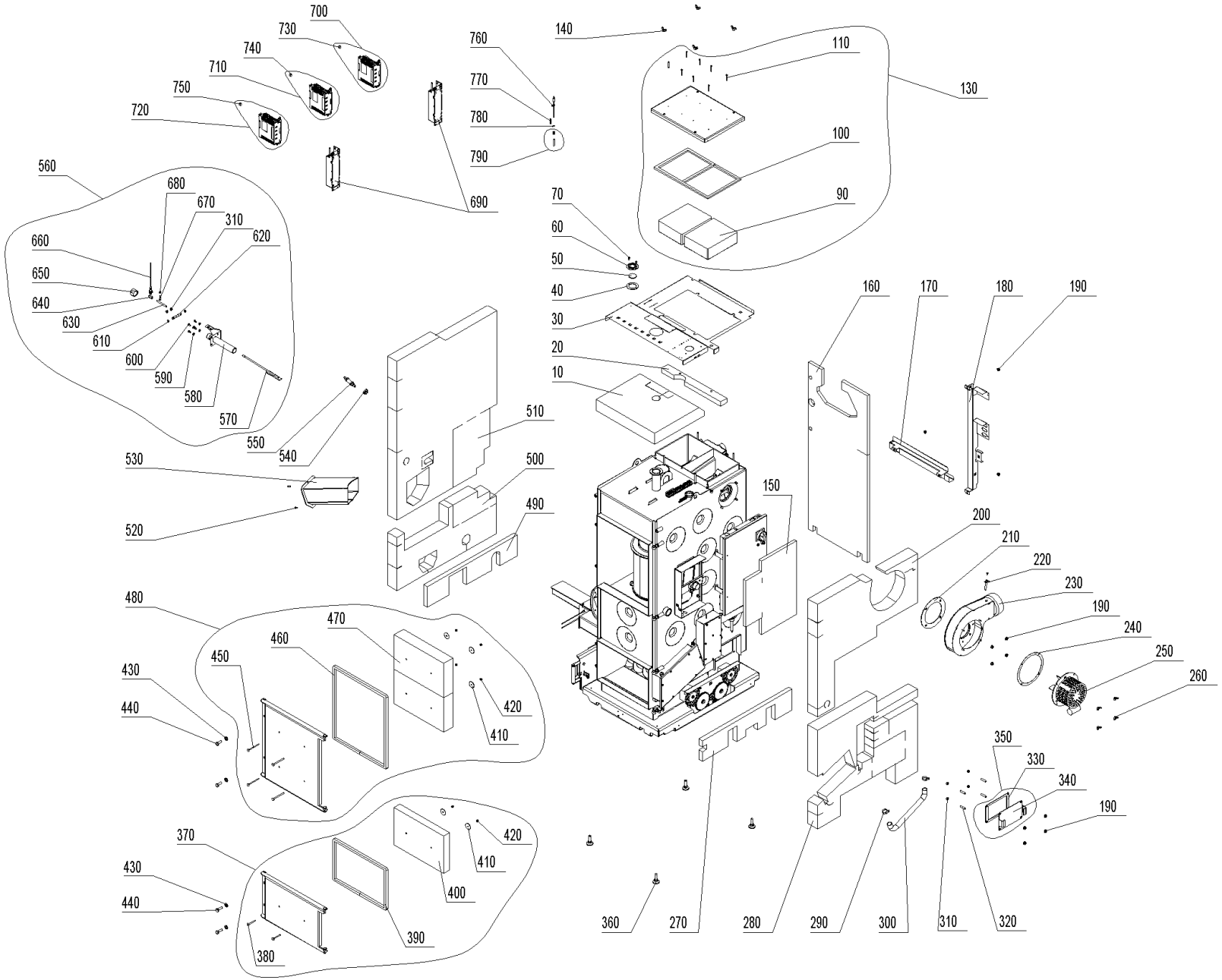

Boiler (A000147)

Item no.	Article no.	Description	Quantity	Unit
210	050825	Blower seal LWK	1.00	pcs
420	016192	Cap nut	6.00	pcs
350	047991	Coasting surface bottom cover for BioWIN XL 35-60	1.00	pcs
770	050647	Combustion chamber sensor spring	1.00	pcs
110	016719	Cylinder drilling screw 4.2 x 38 DIN7504	8.00	pcs
340	047188	de: Abdeckblech BW60, PW	1.00	pcs
250	051039	de: Abgasgebläse kpl. LWK, PW	1.00	pcs
370	054581	de: Aschetür mont. PW24-60	1.00	pcs
390	052378	de: Dichtschnur Ascheür PW24-60	1.00	pcs
460	052381	de: Dichtschnur Heiztür PW24-60	1.00	pcs
330	047190	de: Dichtung Abdeckblende 60BW, PW	1.00	pcs
240	054468	de: Dichtung Gebläsemotor PW24-60	1.00	pcs
100	051868	de: Dichtung Reinigungsdeckel PW24-49	1.00	pcs
40	051712	de: Dichtung Schauloch PW24-60	1.00	pcs
730	054197	de: Eprom auf STOK program. zu FU PuroWIN Zuführung direkt / pneumatisch	1.00	pcs
750	054199	de: Eprom auf TANK program. zu FU PuroWIN Zuführung pneumatisch	1.00	pcs
740	054196	de: Eprom RAS program. zu FU PuroWIN Zuführung direkt	1.00	pcs
710	054847	de: ET-SET: FU mit Eprom RAS zu Zuführung direkt PuroWIN	1.00	pcs
700	054848	de: ET-SET: FU mit Eprom STOK zu Zuführung direkt/pneumatisch PuroWIN	1.00	pcs
720	054849	de: ET-SET: FU mit Eprom TANK zu Zuführung pneumatisch PuroWIN	1.00	pcs
690	054185	de: Filter zu FU, 0,75kW, 1-Phase, PuroWIN	2.00	pcs
140	019414	de: Flügelmutter ähnl. DIN 315 - M8 - St - verzinkt	4.00	pcs

Boiler (A000147)

Item no.	Article no.	Description	Quantity	Unit
570	052176	de: Fühler kpl. PW24/30	1.00	pcs
570	054467	de: Fühler kpl. PW40-60	1.00	pcs
230	053011	de: Gebläsekasten lackiert LWK, PW	1.00	pcs
630	017032	de: Gewindebolzen M8x80 verzinkt	1.00	pcs
50	000307	de: Glasscheibe BOROFLOAT Ø 45/4 mm	1.00	pcs
480	054580	de: Heiztür mont. PW24-60	1.00	pcs
290	029424	de: IDEAL-Schlauchklemmen 22-32mm	2.00	pcs
30	052976	de: Isolierabdeckung oben PW24-60	1.00	pcs
400	052380	de: Isolierstein Aschetür PW24-60	1.00	pcs
470	052384	de: Isolierstein Heiztür PW24-60	2.00	pcs
90	051862	de: Isolierstein NHF links PW24-60	2.00	pcs
160	052732	de: Isolierung hinten oben PW24-60	1.00	pcs
490	053293	de: Isolierung links innen PW24-60	1.00	pcs
510	052774	de: Isolierung links PW24-60	1.00	pcs
500	053295	de: Isolierung links unten PW24-60	1.00	pcs
20	053810	de: Isolierung oben hinten PW24-60	1.00	pcs
10	052977	de: Isolierung oben PW24-60	1.00	pcs
270	053292	de: Isolierung rechts innen PW24-60	1.00	pcs
200	052189	de: Isolierung rechts PW24-60	1.00	pcs
280	053294	de: Isolierung rechts unten PW24-60	1.00	pcs
150	052736	de: Isolierung Schaltfeld PW24-60	1.00	pcs
170	052996	de: Kabelschacht unten PW24-60	1.00	pcs

Boiler (A000147)

Item no.	Article no.	Description	Quantity	Unit
180	052704	de: Kableschacht senkrecht PW24-60	1.00	pcs
650	008850	de: Kappe Nr. 300, 1" schwarz	1.00	pcs
620	052099	de: Level Controll Achse PW24-60	1.00	pcs
580	052734	de: Level Controll Rohr kpl. PW24/30	1.00	pcs
580	052735	de: Level Controll Rohr kpl. PW40-60	1.00	pcs
560	054176	de: Level Control montiert PW24/30	1.00	pcs
560	054175	de: Level Control montiert PW40-60	1.00	pcs
310	031154	de: Mutter M8 - A4	4.00	pcs
800	009185	de: Netzfilter FN2020-10-06 zu PuroWIN	1.00	pcs
130	054579	de: Reinigungsdeckel montiert PW24-60	1.00	pcs
60	087300	de: Rosette für Schauglas	1.00	pcs
300	052989	de: Schlauch Airmetall PU1 PW24-60	1.00	pcs
530	053114	de: Schneckenrohr kpl. PW24/30	1.00	pcs
530	052731	de: Schneckenrohr kpl. PW40-60	1.00	pcs
440	017865	de: Sechskantschraube M12x35 - 8.8	4.00	pcs
610	052174	de: Sicherungsring 12 X 1	2.00	pcs
780	031274	Eyelet M6	1.00	pcs
360	009994	Foot M12X40 JTB38 for HMX, EasyWIN Klassik/Premium 180, LogWIN Premium 180-505	4.00	pcs
680	016594	Hexagon nut M6 DIN 934	1.00	pcs
190	016553	Hexagon nut M8 with flange and gearing	11.00	pcs
670	015041	Hexagon screw DIN 933 - M6x25 - 8.8 - galvanised for VarioWIN, FireWIN	1.00	pcs
70	031545	Hexagon screw M5x12 DIN 7500 (not ilustrated)	2.00	pcs

Boiler (A000147)

Item no.	Article no.	Description	Quantity	Unit
600	017051	Hexagon screw M6x12 DIN 933 (not illustrated)	4.00	pcs
550	051646	Lambda sensor	1.00	pcs
540	007094	Lambda sensor insulating ring for LogWIN Premium 180-505	1.00	pcs
520	020095	M5x16 TT raised countersunk head screw, DIN 7500ME for VestoWIN Premium 200-202, VestoWIN Klassik 170-220	2.00	pcs
640	048554	M8 long nut	1.00	pcs
790	051069	Protective tube for combustion chamber sensor, complete	1.00	pcs
220	041498	Protective tube for exhaust gas sensor	1.00	pcs
660	006832	Proximity switch M12, inductive	1.00	pcs
380	016186	Round-head screw M6x60	2.00	pcs
450	016190	Round-head screw M6x90	4.00	pcs
320	016163	Setscrew DIN913 - M8 x 40-A2 for BioWIN 10-26	4.00	pcs
760	007626	Thermocouple	1.00	pcs
430	017183	U-Washer DIN 125B - M12 - galvanised for VarioWIN, FireWIN, BioWIN XL 35-60	4.00	pcs
590	020540	U-Washer DIN 134 - M6 - galvanised for VarioWIN, FireWIN	4.00	pcs
410	016191	Washer M6 4x40x1,5	6.00	pcs
260	019410	Wing nut M6	4.00	pcs

Cladding (A000148)

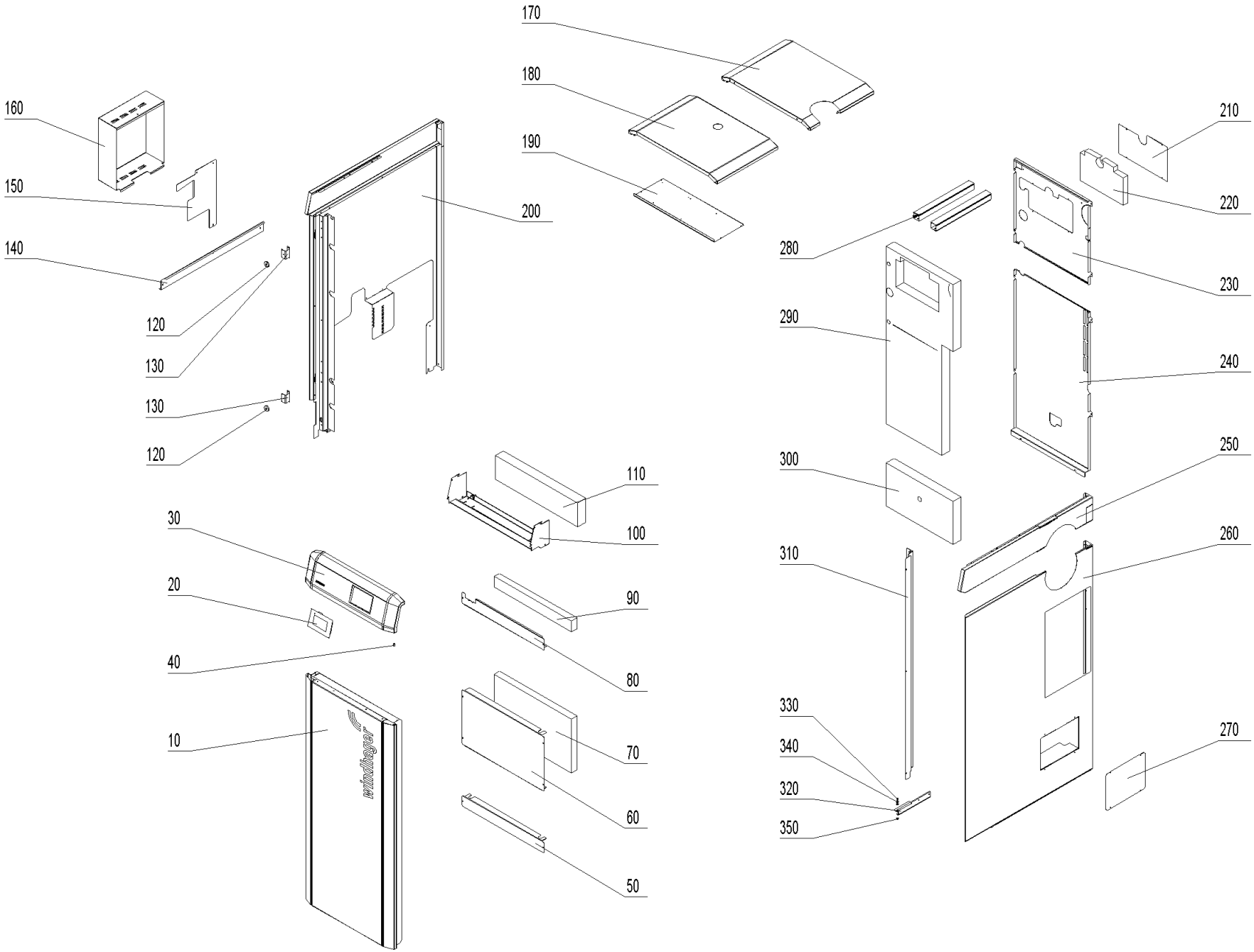

Cladding (A000148)

Item no.	Article no.	Description	Quantity	Unit
160	053812	de: Abdeckung Steckerkonsole PW24-60	1.00	pcs
30	054195	de: Bedienfeld PW	1.00	pcs
100	054163	de: Befestigungsblech Verkleidung PW24-60	1.00	pcs
130	053753	de: Haltebügel Magnet LWPT 18-36	2.00	pcs
190	053813	de: Isolierabdeckung Verbraucherr. PW24-60	1.00	pcs
110	053809	de: Isolierung Bedienfeld PW24-60	1.00	pcs
300	052778	de: Isolierung HFR Gestänge PW24-60	1.00	pcs
220	052776	de: Isolierung HFR oben PW24-60	1.00	pcs
290	052775	de: Isolierung hinten PW24-60	1.00	pcs
70	053297	de: Isolierung vorne mitte PW24-60	1.00	pcs
90	053296	de: Isolierung vorne oben PW24-60	1.00	pcs
120	001761	de: Magnet Ø31 gummiummantelt	2.00	pcs
200	054376	de: Seitenwand links PW24-60	1.00	pcs
150	054162	de: Seitenwand links unten PW24-60	1.00	pcs
270	053814	de: Verkleidung Abdeckung Reinigungsdeckel PW24-60	1.00	pcs
310	052982	de: Verkleidung Abdeckung Seitenwand rechts PW24-60	1.00	pcs
60	052983	de: Verkleidung Abdeckung vorne mitte PW24-60	1.00	pcs
80	052985	de: Verkleidung Abdeckung vorne oben PW24-60	1.00	pcs
50	052984	de: Verkleidung Abdeckung vorne unten PW24-60	1.00	pcs
210	052777	de: Verkleidung Deckel HFR oben PW24-60	1.00	pcs
170	053819	de: Verkleidung Deckel hinten PW24-60	1.00	pcs
180	053818	de: Verkleidung Deckel vorne PW24-60	1.00	pcs

Cladding (A000148)

Item no.	Article no.	Description	Quantity	Unit
230	052787	de: Verkleidung Rückwand oben PW24-60	1.00	pcs
240	051716	de: Verkleidung Rückwand unten PW24-60	1.00	pcs
320	054165	de: Verkleidung Schiene links PW24-60	1.00	pcs
140	054165	de: Verkleidung Schiene links PW24-60	1.00	pcs
250	053822	de: Verkleidung Seitenwand rechts oben PW24-60	1.00	pcs
260	053815	de: Verkleidung Seitenwand rechts PW24-60	1.00	pcs
10	054575	de: Verkleidung Tür kpl. PW24-60	1.00	pcs
280	050978	de: Wand und Deckenkanal BW2, PW	2.00	m
330	033092	de: Zapfenschrauben M5X5	1.00	pcs
340	018309	Disc 5 DIN134	2.00	pcs
40	015507	Dog point screw	1.00	pcs
350	016586	Hexagon nut M5 DIN 934	1.00	pcs
20	001009	INF8 MES INFINITY InfoWIN Touch	1.00	pcs

combustion chamber (A000151)

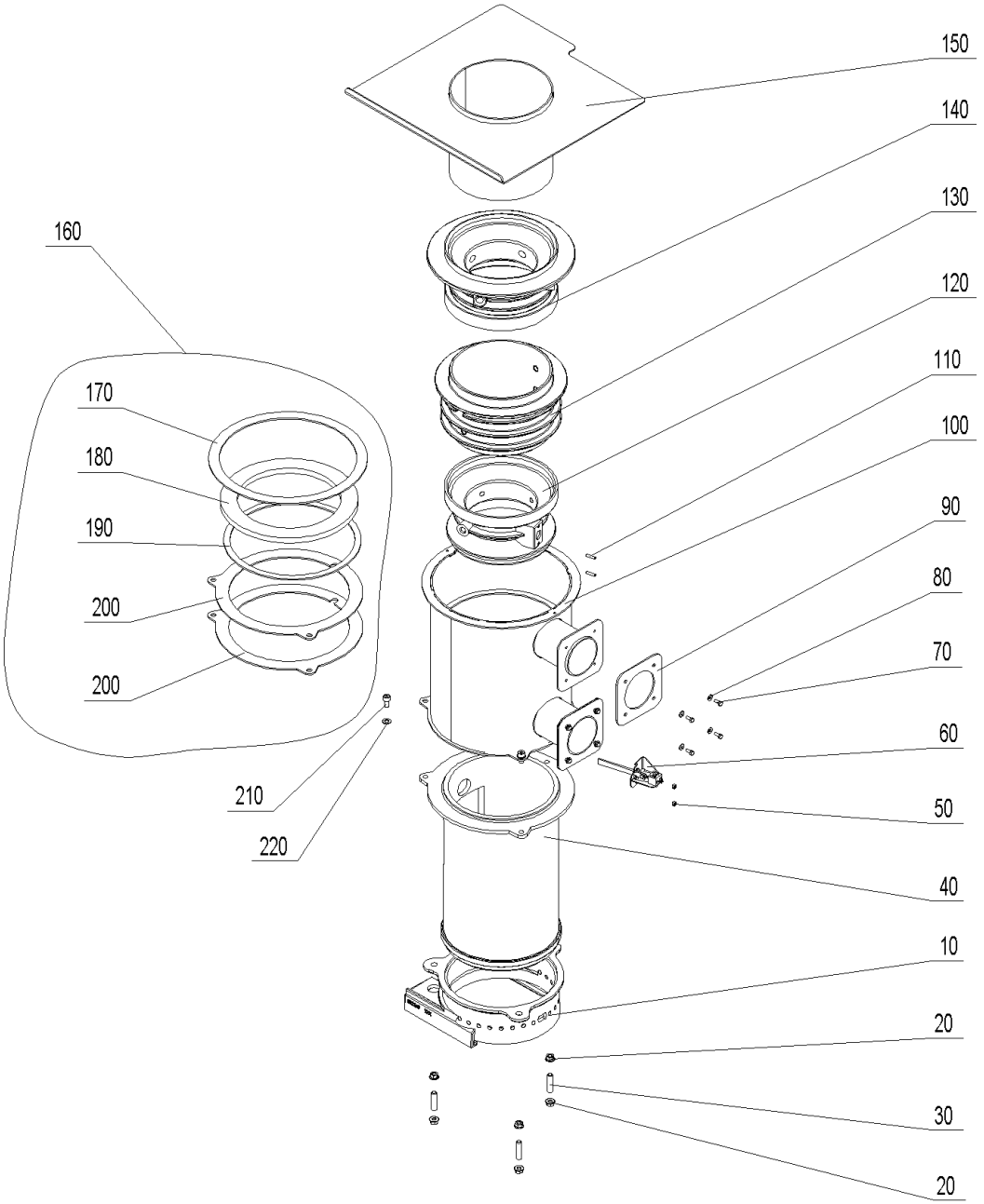

combustion chamber (A000151)

Item no.	Article no.	Description	Quantity	Unit
90	052088	de: Brennerdichtung rechts PW24-60	2.00	pcs
100	052268	de: Brenner kpl. PW24/30	1.00	pcs
200	053645	de: Dichtung Brennerflansch PW24/30	2.00	pcs
180	052275	de: Dichtung Sekundärluft /Tertiärluft PW24/30	1.00	pcs
190	052274	de: Dichtung Sekundärluft PW24/30	1.00	pcs
160	054374	de: Dichtungsset PW24/30	1.00	pcs
170	052276	de: Dichtung Tertiärluft PW24/30	1.00	pcs
110	054158	de: Gewindestifte mit ISK und Kegelkuppe ISO4026/DIN 913 M 5X 20 Edelstahl A2	2.00	pcs
30	052061	de: Gewindestift M10x40 A2	3.00	pcs
10	052263	de: Konus D200 PW24/30	1.00	pcs
130	052278	de: Sekundärluftdüse oben PW24/30	1.00	pcs
120	052277	de: Sekundärluftdüse unten PW24/30	1.00	pcs
60	053336	de: Sekundärluftzündung kpl. mont. PW24-60	1.00	pcs
140	052279	de: Tertiärluftdüse PW24/30	1.00	pcs
40	053599	de: Vergaserrohr 200 PW24/30	1.00	pcs
150	052280	de: Vergaserrohr kpl. PW24/30	1.00	pcs
210	053834	de: Zylinderschraube m. Innensechskant M8 x 20 - A4	3.00	pcs
80	018309	Disc 5 DIN134	8.00	pcs
220	024779	Disc 8 ISO 7089	3.00	pcs
50	017035	Hexagon nut M5 DIN 934	2.00	pcs
20	016567	Hexagon nut M10 with flange and gearing (not illustrated)	6.00	pcs
70	017020	Hexagon screw Niro DIN 933 - M5x12 - A2 for HMX, FireWIN, VarioWIN	8.00	pcs

Control panel (A000160)

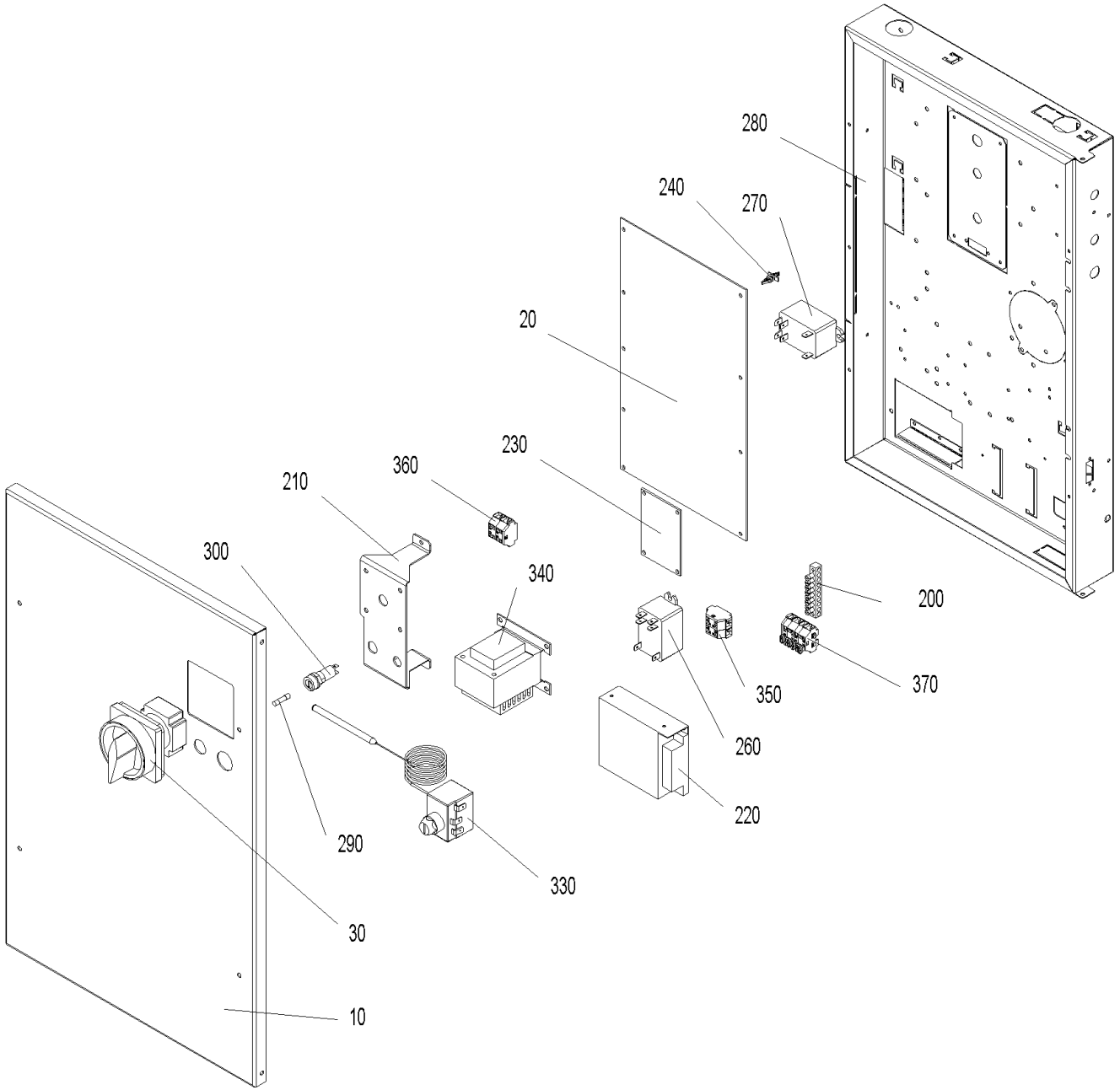

Control panel (A000160)

Item no.	Article no.	Description	Quantity	Unit
290	003228	6.3A fuse (not illustrated)	1.00	pcs
380	018140	Cylinder screw 4.2x13 DIN7981ST (not illustrated)	1.00	pcs
10	053289	de: Deckel Schaltfeld PW24-60	1.00	pcs
20	012007	de: Feuerungsautomat PW	1.00	pcs
30	012010	de: Hauptschalter 2polig 16 A PW	1.00	pcs
145	053326	de: Ka. Primärzündung PW	1.00	pcs
40	053331	de: Kabel 230V Versorgung FU`s + FA2 PW	1.00	pcs
50	053328	de: Kabel Ascheaustragung PW	1.00	pcs
60	054299	de: Kabel Ascherostschieber PW	1.00	pcs
70	054300	de: Kabel Glutbettschieber PW	1.00	pcs
80	053330	de: Kabel Heizflächenreinigung PW	1.00	pcs
90	053318	de: Kabel LON Elektrikeranschluß PW	1.00	pcs
100	053332	de: Kabel LON FA2 + STB PW	1.00	pcs
130	053385	de: Kabel ModBUS Steigschnecke PW	1.00	pcs
110	053335	de: Kabel Motor Ascheschieber PW	1.00	pcs
120	054306	de: Kabel Motor Glutbettschieber PW	1.00	pcs
140	053339	de: Kabel Netz und Heizungsnotschalter PW	1.00	pcs
150	053322	de: Kabel Saugzuggebläse PW	1.00	pcs
160	053323	de: Kabel Sekundärfluftklappe und Schalter Überfüllung PW	1.00	pcs
170	053324	de: Kabel Sekundärzündung PW	1.00	pcs
180	054016	de: Kabel Türschalter kpl. PW	1.00	pcs
190	053338	de: Kabel Versorgung ModBUS FU`s+FA2 PW	1.00	pcs

Control panel (A000160)

Item no.	Article no.	Description	Quantity	Unit
210	053984	de: Konsole Hauptschalter PW24-60	1.00	pcs
220	002053	de: Netzteil 12VDC 2,1A	1.00	pcs
230	012014	de: Platine - Relais PW	1.00	pcs
260	005075	de: Relais 16A AC 2 polig 12V DC Steuerung	1.00	pcs
300	003663	Fuse holder	1.00	pcs
250	007629	Immersion sensor PT 1000 (not illustrated)	1.00	pcs
310	502186	MES009M Immersion sensor	1.00	pcs
240	007609	PCB holder	1.00	pcs
270	005025	Power relay OMRON G7L-2A-BUB 200/240AC for PMX,BioWIN XL, BioWIN10-26,FireWIN,VarioWIN, BioWIN XL 35-60	1.00	pcs
200	009929	Terminal bar MS 8-pin 8x8mm for VarioWIN,FireWIN, BioWIN XL 35-60	1.00	pcs
320	007626	Thermocouple	1.00	pcs
330	005672	Thermostat LS1+100-6U	1.00	pcs
340	007096	Transformer for O2 sensor 18VA for LogWIN Premium 180-505	1.00	pcs
360	006833	Wago terminal block 261; 4-pin "12V GND"	1.00	pcs
350	006834	Wago terminal block 261; 4-pin "safety 1-4"	1.00	pcs
370	007656	Wago terminal block 261; 6-pin	1.00	pcs

Heating surface cleaning (A000155)

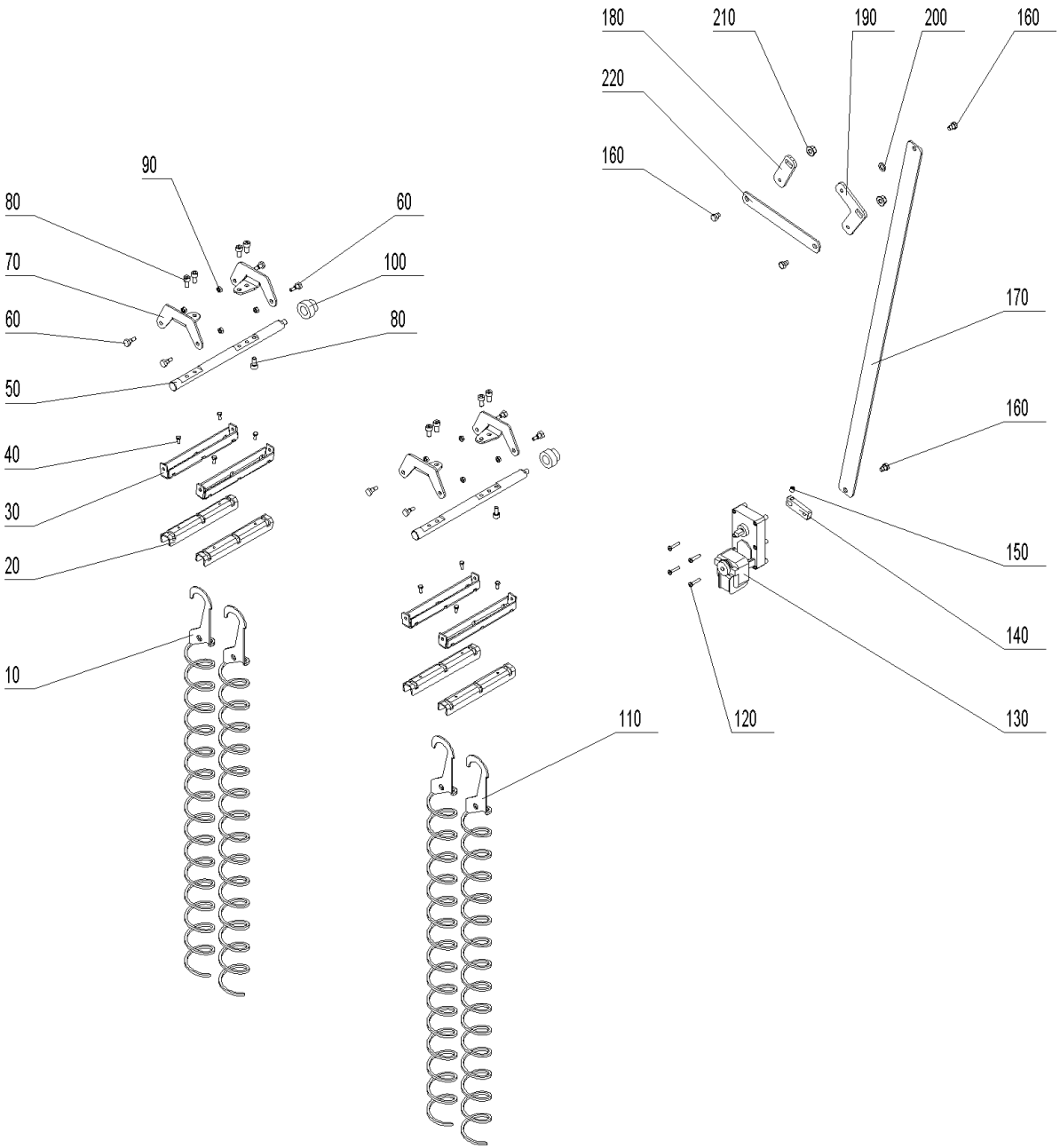

Heating surface cleaning (A000155)

Item no.	Article no.	Description	Quantity	Unit
20	047065	Bottom cleaning profile for BioWIN XL 35-60	4.00	pcs
160	012502	Collar screw	4.00	pcs
120	016837	Cylinder screw M5x25 ISO 7045	4.00	pcs
180	053281	de: Achsenhebel links HFR PW24-60	1.00	pcs
190	053280	de: Achsenhebel rechts HFR PW24-60	1.00	pcs
70	052738	de: Lagerarm für Heizflächenreinigung PW24-60	4.00	pcs
10	052783	de: Reinigungsschnecke kpl. PW24/30	4.00	pcs
140	053282	de: Rüttelhebel Motor HFR PW24-60	1.00	pcs
200	018031	de: Scheibe ISO 7092 - 10 - blank	1.00	pcs
220	052781	de: Verbinder Rüttelachse HFR PW24-60	1.00	pcs
170	053284	de: Verbindung Heizflächenreinigung PW24-60	1.00	pcs
50	052737	de: Welle für Heizflächenreinigung PW24-60	2.00	pcs
80	053102	de: Zylinderschraube m. Innensechskant ISO 4762 - M 8 x 16 - A4 (DIN 912)	10.00	pcs
100	047416	Heating surface cleaning bearing for BioWIN XL 35-60	2.00	pcs
210	016567	Hexagon nut M10 with flange and gearing (not illustrated)	2.00	pcs
40	017020	Hexagon screw Niro DIN 933 - M5x12 - A2 for HMX, FireWIN, VarioWIN	8.00	pcs
130	044665	Motor	1.00	pcs
90	016596	Nut DIN 934 - M6 - A2 for VarioWIN, FireWIN, BioWIN10-26, BioWIN XL 35-60	8.00	pcs
60	006756	Screw M6 for heating surface cleaning for PMX,BioWIN 10-26,FireWIN, BioWIN XL 35-60, LogWIN Premium 180-505	8.00	pcs
150	033112	Setscrew M8x10 DIN916	1.00	pcs
30	047064	Top cleaning profile for BioWIN XL 35-60	4.00	pcs

Ignition (A000158)

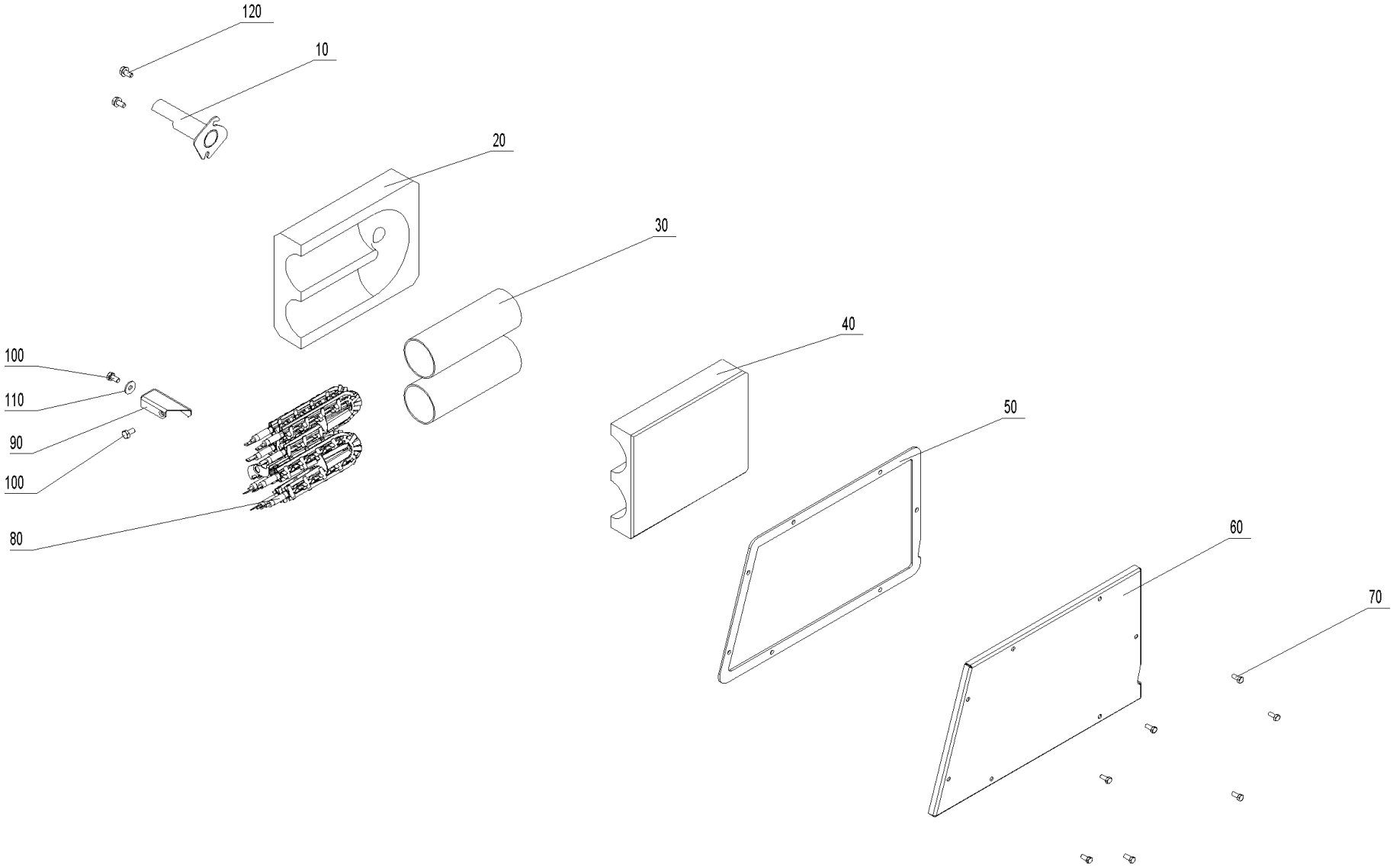

Ignition (A000158)

Item no.	Article no.	Description	Quantity	Unit
60	052717	de: Abdeckung Zündung PW24-60	1.00	pcs
90	052387	de: Anschlag Zündung PW24-60	1.00	pcs
50	052993	de: Dichtung Zündung PW24-60	1.00	pcs
20	052713	de: Isolierstein unten Zündung PW24-60	1.00	pcs
10	052716	de: Zündrohr kpl. PW24/30	1.00	pcs
10	052766	de: Zündrohr kpl. PW40-60	1.00	pcs
110	031753	Disc 6 ISO 7093	1.00	pcs
100	017051	Hexagon screw M6x12 DIN 933 (not illustrated)	2.00	pcs
120	031549	Hexagon screw M6x12 DIN 7500	2.00	pcs
70	017020	Hexagon screw Niro DIN 933 - M5x12 - A2 for HMX, FireWIN, VarioWIN	7.00	pcs
80	055201	Ignition element BioWIN10-26, FireWIN from lot 15, VarioWIN from lot 15 BioWIN XL, LWK	1.00	pcs
30	050489	Ignition tube LWP18-50, LWK	2.00	pcs
40	007484	Insulating stone top for automatic ignition LWP18-50, LWK	1.00	pcs

Air control PL (A000159)

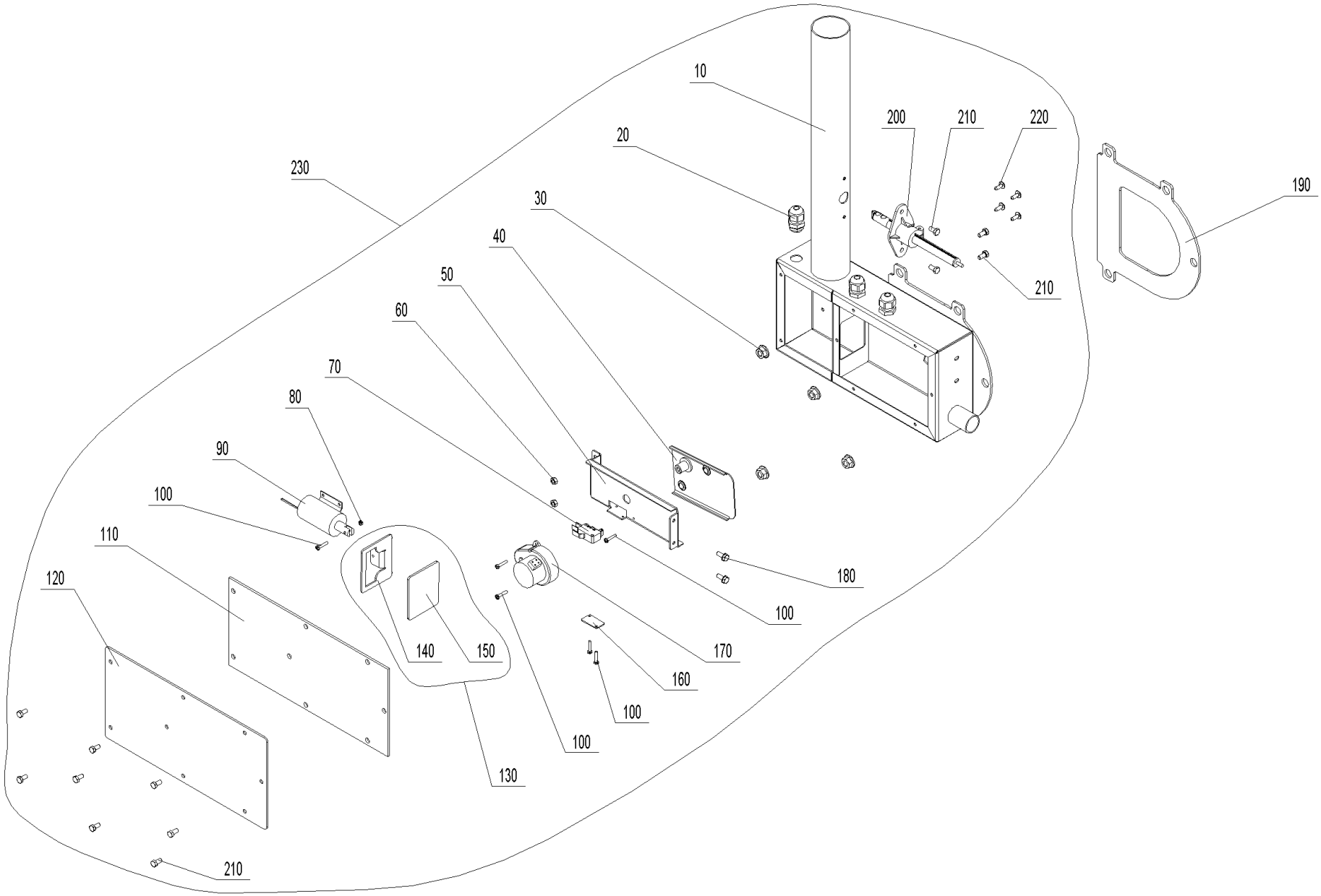

Air control PL (A000159)

Item no.	Article no.	Description	Quantity	Unit
70	009277	Air control microswitch	1.00	pcs
220	018139	Cylinder screw 4.2x13 DIN7981SP (not illustrated)	4.00	pcs
140	052885	de: Absperrpl. PW24-60	1.00	pcs
130	054578	de: Absperrplatte kpl. PW24-60	1.00	pcs
50	052884	de: Befestigungsblende PW24-60	1.00	pcs
120	052881	de: Deckel Luftschacht PW24-60	1.00	pcs
150	052886	de: Dichtung Absperrplatte PW24-60	1.00	pcs
110	052882	de: Dichtung Deckel Luftschacht PW24-60	1.00	pcs
190	052890	de: Dichtung Flansch Luftschacht PW24-60	1.00	pcs
40	053649	de: Luftklappe PW24-60	1.00	pcs
230	052893	de: Luftregelung kpl. PW24-60	1.00	pcs
10	052891	de: Luftschacht kpl. PW24-60	1.00	pcs
170	009579	de: Motor - Luftklappen PW24-60	1.00	pcs
160	051044	de: Platte Mikroschalter PW24-60	1.00	pcs
200	052878	de: Strömungsmessumformer PW24-60	1.00	pcs
100	016766	de: Zyl.-Schrauben M3x16 verz.m.KS. DIN 7985	6.00	pcs
90	052911	de: Zylindermagnet PW24-60	1.00	pcs
80	016551	Hexagon nut M3 DIN 934	1.00	pcs
60	017035	Hexagon nut M5 DIN 934	2.00	pcs
30	016553	Hexagon nut M8 with flange and gearing	4.00	pcs
180	031545	Hexagon screw M5x12 DIN 7500 (not ilustrated)	2.00	pcs
210	017020	Hexagon screw Niro DIN 933 - M5x12 - A2 for HMX, FireWIN, VarioWIN	12.00	pcs

Air control PL (A000159)

Item no.	Article no.	Description	Quantity	Unit
20	006340	Mount connections PG9	3.00	pcs

Air control SL/TL (A000161)

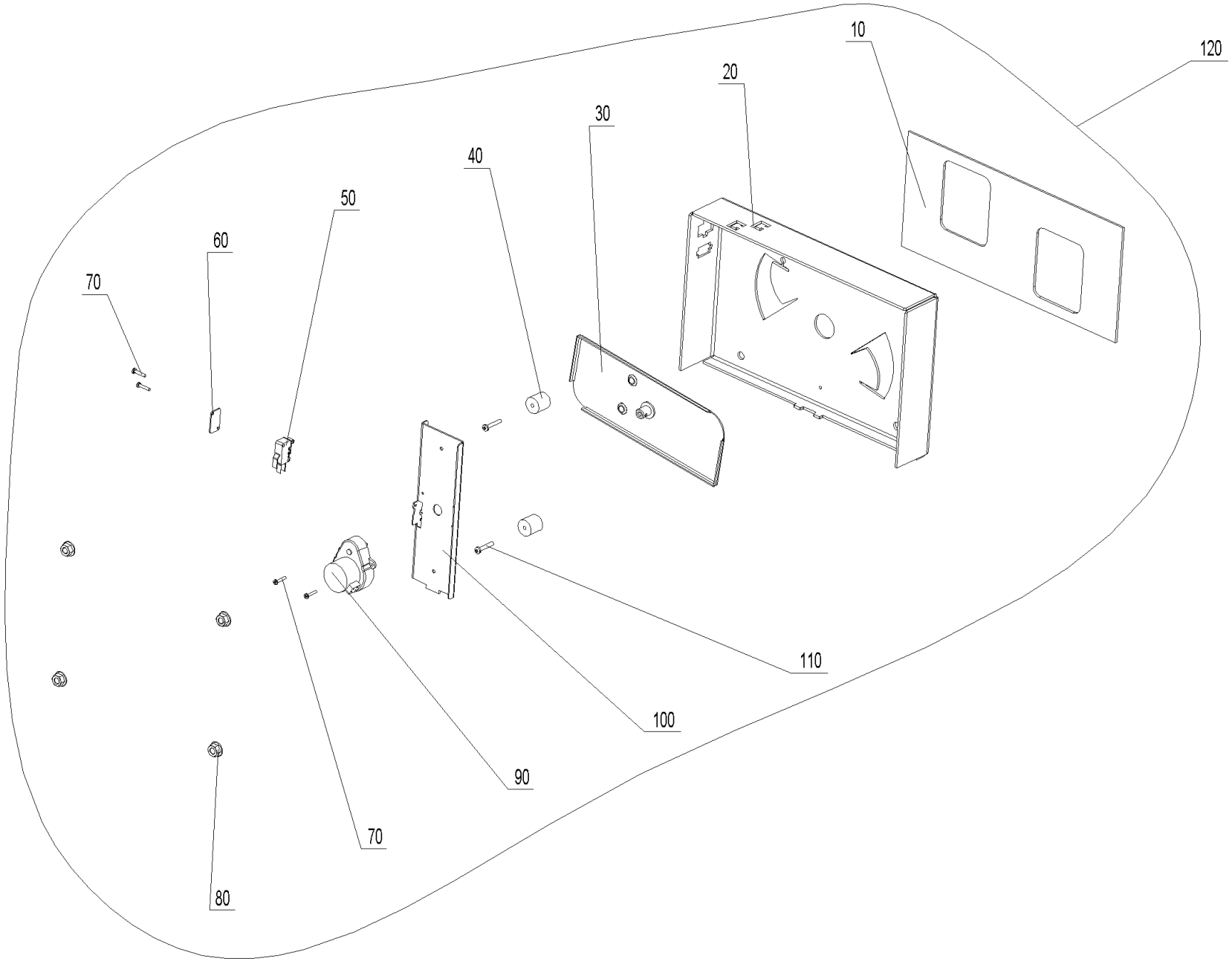

Air control SL/TL (A000161)

Item no.	Article no.	Description	Quantity	Unit
50	009277	Air control microswitch	1.00	pcs
40	053829	de: Abstandswelle PW 24-60	2.00	pcs
100	052899	de: Befestigungsblech Stellmotor PW24-60	1.00	pcs
10	052900	de: Dichtung Luftregelung S/T PW24-60	1.00	pcs
20	052897	de: Konsole Luftregelung PW24-60	1.00	pcs
30	053648	de: Luftklappe PW24-60	1.00	pcs
120	052896	de: Luftregelung kpl. PW24-60	1.00	pcs
90	009579	de: Motor - Luftklappen PW24-60	1.00	pcs
60	051044	de: Platte Mikroschalter PW24-60	1.00	pcs
70	016766	de: Zyl.-Schrauben M3x16 verz.m.KS. DIN 7985	4.00	pcs
110	016802	de: Zyl.-Schrauben M4x25 verz.m.KS DIN 7985	2.00	pcs
80	016553	Hexagon nut M8 with flange and gearing	4.00	pcs

Ash conveyor (A000154)

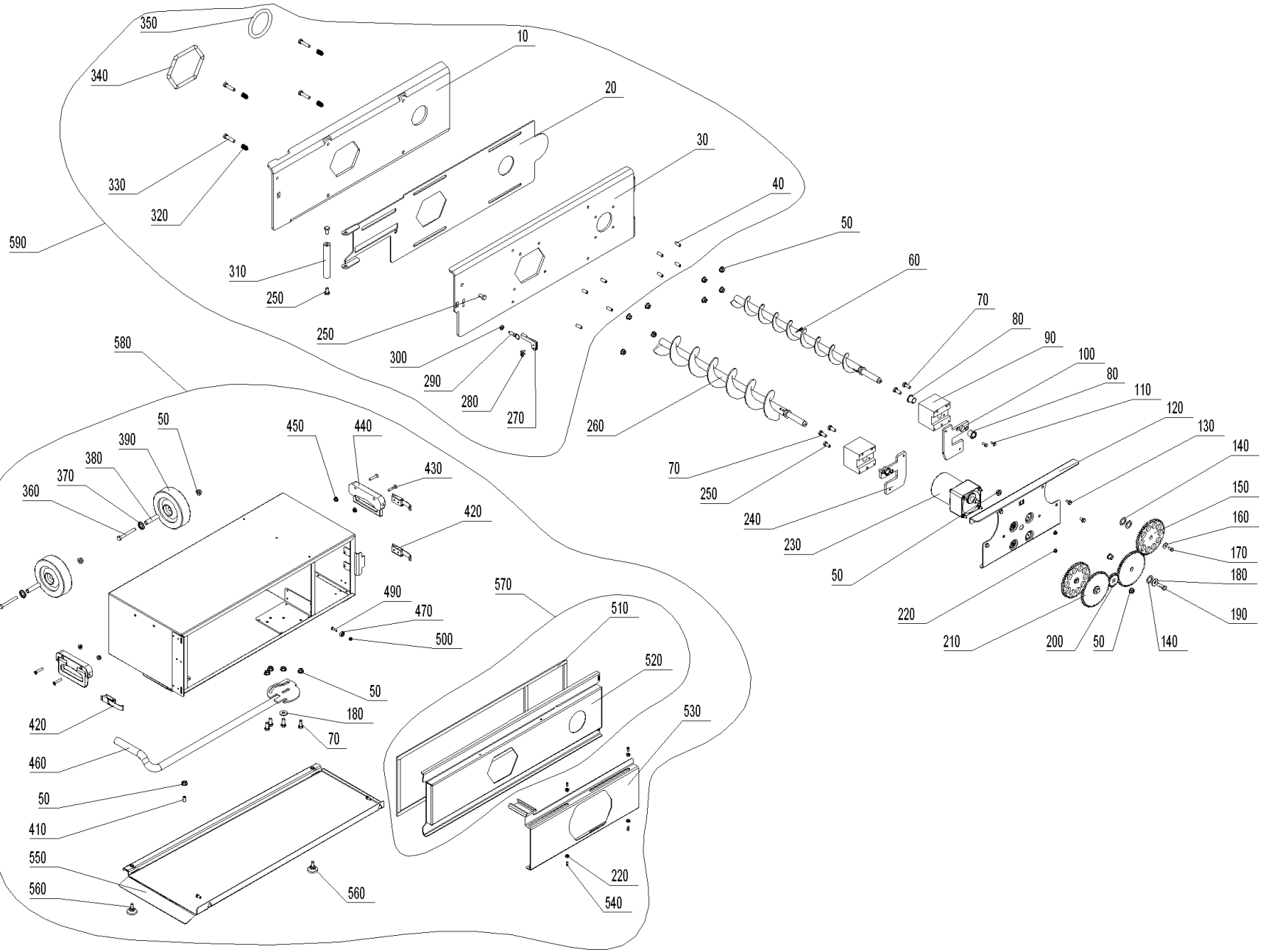

Ash conveyor (A000154)

Item no.	Article no.	Description	Quantity	Unit
90	044680	Ash removal flange, complete with bearing bushes for BioWIN 10-26 (Only BioWIN Exklusiv), BioWIN XL 35-60	2.00	pcs
230	050901	Auger motor SPG	1.00	pcs
280	018140	Cylinder screw 4.2x13 DIN7981ST (not illustrated)	2.00	pcs
370	054574	de: Achsenklemmring ohne Kappe 12mm FDST brüniert	2.00	pcs
270	053993	de: Arretierungslasche PW24-60	1.00	pcs
60	052193	de: Ascheaustragung Schnecke hinten kpl. PW24-60	1.00	pcs
260	052217	de: Ascheaustragung Schnecke vorne kpl. PW24-60	1.00	pcs
570	054576	de: Aschebox Deckel kpl. PW24-60	1.00	pcs
520	054493	de: Aschebox Deckel PW24-60	1.00	pcs
30	053990	de: Ascheboxflansch PW24-60	1.00	pcs
590	053994	de: Ascheboxflansch PW24-60	1.00	pcs
460	054471	de: Aschebox Griff PW24-60	1.00	pcs
380	054490	de: Aschebox Lagerrohr PW24-60	2.00	pcs
550	054485	de: Aschebox Sockel PW24-60	1.00	pcs
530	054494	de: Aschebox Verschluß PW24-60	1.00	pcs
10	053992	de: Dichtblech Ascheboxflansch PW24-60	1.00	pcs
350	053998	de: Dichtung AAT hinten PW24-60	1.00	pcs
340	052375	de: Dichtung AAT vorne PW24-60	1.00	pcs
510	054571	de: Dichtung Aschelade PW24-60	1.00	pcs
320	053997	de: Druckfeder	4.00	pcs
240	051169	de: Flanschplatte links AAT PW24-60	1.00	pcs
100	052371	de: Flanschplatte rechts AAT PW24-60	1.00	pcs

Ash conveyor (A000154)

Item no.	Article no.	Description	Quantity	Unit
40	033536	de: Gewindestift M8 x 20 VZ, DIN 913	8.00	pcs
440	054570	de: Griff	2.00	pcs
310	053995	de: Griff Aschelade PW24-60	1.00	pcs
120	052197	de: Konsole AAT PW24-60	1.00	pcs
580	052700	de: PW9 Aschebox zu Hackgut-Vergaser	1.00	pcs
470	053906	de: Rillenkugellager	2.00	pcs
140	047545	de: Scheibe D25/16,2x1,5 verz.	6.00	pcs
20	053991	de: Schieber Ascheboxflansch PW24-60	1.00	pcs
330	031550	de: Sechskantschraube DIN 931 - M8x35 - 8.8 - verzinkt	4.00	pcs
490	015025	de: Sechskantschraube DIN 933 - M5x16 - 8.8 - verzinkt	2.00	pcs
360	033093	de: Sechskantschraube DIN 933 - M8x65 - 8.8	2.00	pcs
430	054573	de: Senkschraube M6x30 DIN965	4.00	pcs
210	052195	de: Stirnrad Getriebe PW24-60	2.00	pcs
200	052372	de: Stirnrad Motor PW24-60	1.00	pcs
150	052196	de: Stirnrad Schnecke PW24-60	2.00	pcs
540	033092	de: Zapfenschrauben M5X5	4.00	pcs
160	031753	Disc 6 ISO 7093	2.00	pcs
180	031755	Disc 8 ISO 7093	3.00	pcs
80	012508	Friction bearing with connector	4.00	pcs
220	016565	Hexagon nut M5 with flange and gearing (not illustrated)	8.00	pcs
300	016659	Hexagon nut M8 DIN434	1.00	pcs
50	016553	Hexagon nut M8 with flange and gearing	17.00	pcs

Ash conveyor (A000154)

Item no.	Article no.	Description	Quantity	Unit
450	016566	Hexagon nut with flange and gearing M6	4.00	pcs
70	017873	Hexagon screw DIN 933 - M8x20 - A2 for VarioWIN, FireWIN	8.00	pcs
110	031545	Hexagon screw M5x12 DIN 7500 (not ilustrated)	4.00	pcs
170	017051	Hexagon screw M6x12 DIN 933 (not illustrated)	2.00	pcs
130	031549	Hexagon screw M6x12 DIN 7500	4.00	pcs
250	017872	Hexagon screw M8x16, DIN 933 for BioWIN XL 35-60	4.00	pcs
190	017191	Hexagon screw M8x25 DIN 933	2.00	pcs
560	009991	Leg - JTLO 38 - M8x16 for VarioWIN	2.00	pcs
290	007191	Locking bolt with pull ring GN 717-5-M8-A-ST	1.00	pcs
500	016727	Lock nut M5	2.00	pcs
410	051836	Spring-loaded pressure piece M8	0.00	pcs
420	009546	Spring lock	3.00	pcs
390	006888	Wheel AG 125-12	2.00	pcs

Ash removal (A000150)

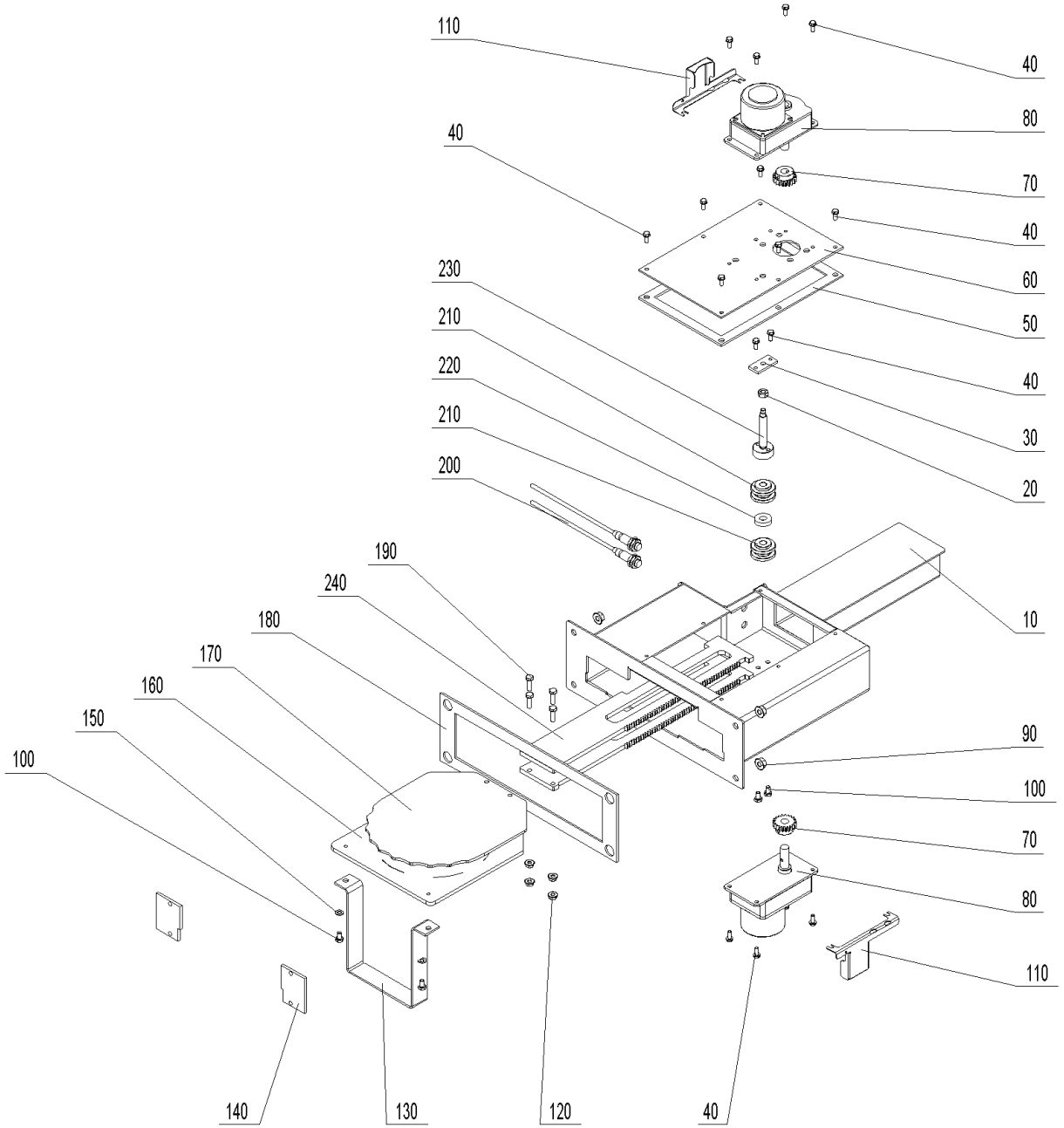

Ash removal (A000150)

Item no.	Article no.	Description	Quantity	Unit
210	007125	Bearing for vibrating drive	4.00	pcs
160	052163	de: Ascheschieber PW40-60	1.00	pcs
130	052907	de: Ascheverdrängblech PW24-60	1.00	pcs
60	052148	de: Deckel oben Entaschung PW24-60	1.00	pcs
50	052151	de: Dichtung Deckel Entaschung PW24-60	1.00	pcs
180	052152	de: Dichtung Fl. Entaschung PW24-60	1.00	pcs
220	052149	de: Distanzscheibe PW24-60	1.00	pcs
140	052904	de: Führungsplatte Entaschung PW24/30	0.00	pcs
170	052160	de: Glutbettschieber für PW40-60	1.00	pcs
110	054167	de: Kabelabdeckung Motor PW24-60	2.00	pcs
10	052140	de: Konsole Entaschung PW24-60	1.00	pcs
30	052150	de: Lagerungsblech PW24-60	1.00	pcs
80	053641	de: Motor - Entaschung zu PuroWIN	1.00	pcs
150	031713	de: Scheibe ISO 7089 - 6 - A2	2.00	pcs
70	052154	de: Stirnrad PW24-60	2.00	pcs
230	052153	de: Welle Lagerung PW24-60	1.00	pcs
240	053651	de: Zahnstange ob. PW40-60	2.00	pcs
90	016553	Hexagon nut M8 with flange and gearing	4.00	pcs
120	016566	Hexagon nut with flange and gearing M6	4.00	pcs
100	015026	Hexagon screw DIN 933 - M6x10 - 8.8 - galvanised for VarioWIN, FireWIN	6.00	pcs
40	031545	Hexagon screw M5x12 DIN 7500 (not ilustrated)	20.00	pcs
190	015471	Hexagon screw M6x20 DIN 933	4.00	pcs

Ash removal (A000150)

Item no.	Article no.	Description	Quantity	Unit
20	015992	Nut M8 DIN 934 V2 - LogWIN Klassik pellet ready	1.00	pcs
200	006832	Proximity switch M12, inductive	2.00	pcs

Boiler (A000147)

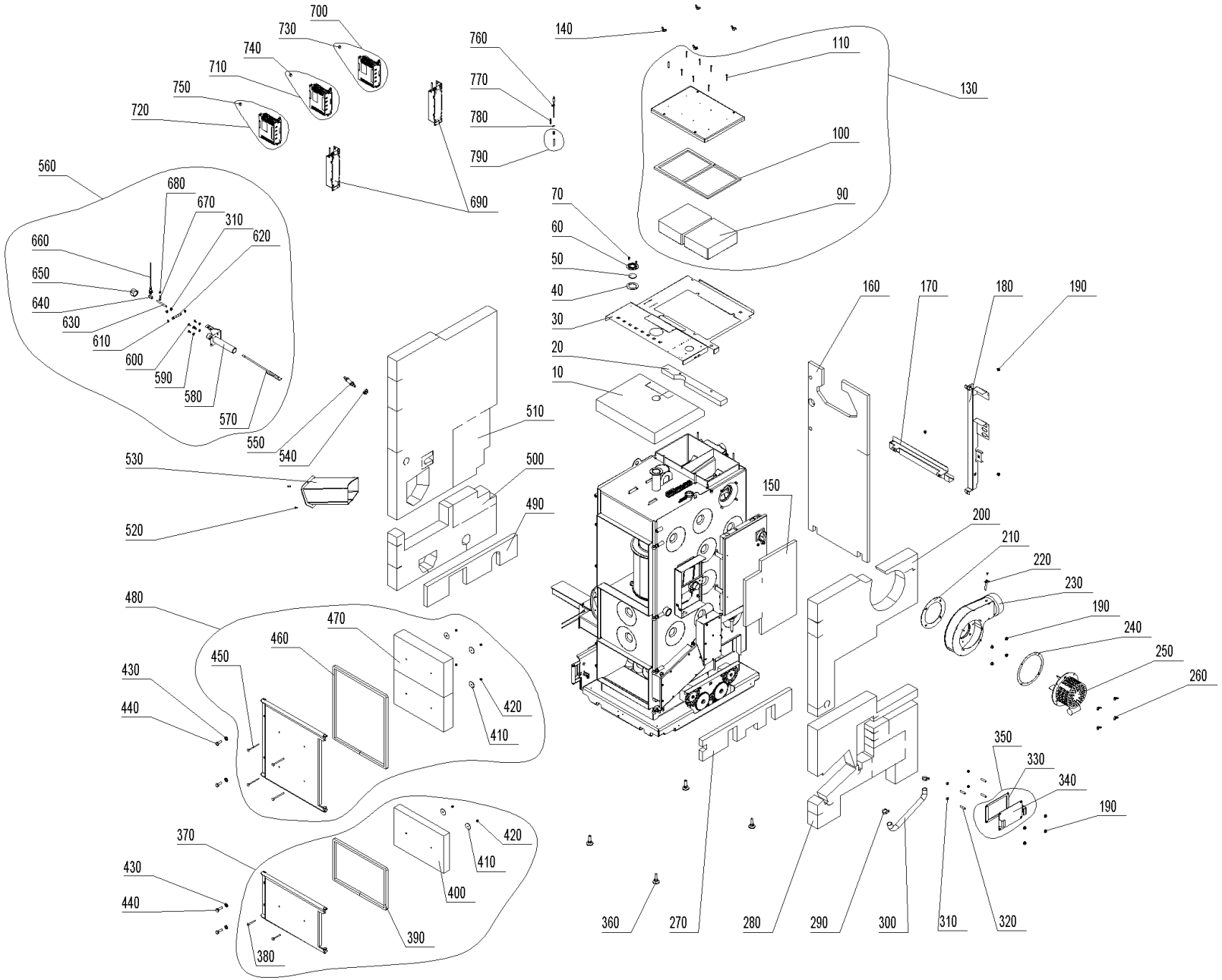

Boiler (A000147)

Item no.	Article no.	Description	Quantity	Unit
210	050825	Blower seal LWK	1.00	pcs
420	016192	Cap nut	6.00	pcs
350	047991	Coasting surface bottom cover for BioWIN XL 35-60	1.00	pcs
770	050647	Combustion chamber sensor spring	1.00	pcs
110	016719	Cylinder drilling screw 4.2 x 38 DIN7504	8.00	pcs
340	047188	de: Abdeckblech BW60, PW	1.00	pcs
250	051039	de: Abgasgebläse kpl. LWK, PW	1.00	pcs
370	054581	de: Aschetür mont. PW24-60	1.00	pcs
390	052378	de: Dichtschnur Ascheür PW24-60	1.00	pcs
460	052381	de: Dichtschnur Heiztür PW24-60	1.00	pcs
330	047190	de: Dichtung Abdeckblende 60BW, PW	1.00	pcs
240	054468	de: Dichtung Gebläsemotor PW24-60	1.00	pcs
100	051868	de: Dichtung Reinigungsdeckel PW24-49	1.00	pcs
40	051712	de: Dichtung Schauloch PW24-60	1.00	pcs
730	054197	de: Eprom auf STOK program. zu FU PuroWIN Zuführung direkt / pneumatisch	1.00	pcs
750	054199	de: Eprom auf TANK program. zu FU PuroWIN Zuführung pneumatisch	1.00	pcs
740	054196	de: Eprom RAS program. zu FU PuroWIN Zuführung direkt	1.00	pcs
710	054847	de: ET-SET: FU mit Eprom RAS zu Zuführung direkt PuroWIN	1.00	pcs
700	054848	de: ET-SET: FU mit Eprom STOK zu Zuführung direkt/pneumatisch PuroWIN	1.00	pcs
720	054849	de: ET-SET: FU mit Eprom TANK zu Zuführung pneumatisch PuroWIN	1.00	pcs
690	054185	de: Filter zu FU, 0,75kW, 1-Phase, PuroWIN	2.00	pcs
140	019414	de: Flügelmutter ähnl. DIN 315 - M8 - St - verzinkt	4.00	pcs

Boiler (A000147)

Item no.	Article no.	Description	Quantity	Unit
570	052176	de: Fühler kpl. PW24/30	1.00	pcs
570	054467	de: Fühler kpl. PW40-60	1.00	pcs
230	053011	de: Gebläsekasten lackiert LWK, PW	1.00	pcs
630	017032	de: Gewindebolzen M8x80 verzinkt	1.00	pcs
50	000307	de: Glasscheibe BOROFLOAT Ø 45/4 mm	1.00	pcs
480	054580	de: Heiztür mont. PW24-60	1.00	pcs
290	029424	de: IDEAL-Schlauchklemmen 22-32mm	2.00	pcs
30	052976	de: Isolierabdeckung oben PW24-60	1.00	pcs
400	052380	de: Isolierstein Aschetür PW24-60	1.00	pcs
470	052384	de: Isolierstein Heiztür PW24-60	2.00	pcs
90	051862	de: Isolierstein NHF links PW24-60	2.00	pcs
160	052732	de: Isolierung hinten oben PW24-60	1.00	pcs
490	053293	de: Isolierung links innen PW24-60	1.00	pcs
510	052774	de: Isolierung links PW24-60	1.00	pcs
500	053295	de: Isolierung links unten PW24-60	1.00	pcs
20	053810	de: Isolierung oben hinten PW24-60	1.00	pcs
10	052977	de: Isolierung oben PW24-60	1.00	pcs
270	053292	de: Isolierung rechts innen PW24-60	1.00	pcs
200	052189	de: Isolierung rechts PW24-60	1.00	pcs
280	053294	de: Isolierung rechts unten PW24-60	1.00	pcs
150	052736	de: Isolierung Schaltfeld PW24-60	1.00	pcs
170	052996	de: Kabelschacht unten PW24-60	1.00	pcs

Boiler (A000147)

Item no.	Article no.	Description	Quantity	Unit
180	052704	de: Kableschacht senkrecht PW24-60	1.00	pcs
650	008850	de: Kappe Nr. 300, 1" schwarz	1.00	pcs
620	052099	de: Level Controll Achse PW24-60	1.00	pcs
580	052734	de: Level Controll Rohr kpl. PW24/30	1.00	pcs
580	052735	de: Level Controll Rohr kpl. PW40-60	1.00	pcs
560	054176	de: Level Control montiert PW24/30	1.00	pcs
560	054175	de: Level Control montiert PW40-60	1.00	pcs
310	031154	de: Mutter M8 - A4	4.00	pcs
800	009185	de: Netzfilter FN2020-10-06 zu PuroWIN	1.00	pcs
130	054579	de: Reinigungsdeckel montiert PW24-60	1.00	pcs
60	087300	de: Rosette für Schauglas	1.00	pcs
300	052989	de: Schlauch Airmetall PU1 PW24-60	1.00	pcs
530	053114	de: Schneckenrohr kpl. PW24/30	1.00	pcs
530	052731	de: Schneckenrohr kpl. PW40-60	1.00	pcs
440	017865	de: Sechskantschraube M12x35 - 8.8	4.00	pcs
610	052174	de: Sicherungsring 12 X 1	2.00	pcs
780	031274	Eyelet M6	1.00	pcs
360	009994	Foot M12X40 JTB38 for HMX, EasyWIN Klassik/Premium 180, LogWIN Premium 180-505	4.00	pcs
680	016594	Hexagon nut M6 DIN 934	1.00	pcs
190	016553	Hexagon nut M8 with flange and gearing	11.00	pcs
670	015041	Hexagon screw DIN 933 - M6x25 - 8.8 - galvanised for VarioWIN, FireWIN	1.00	pcs
70	031545	Hexagon screw M5x12 DIN 7500 (not ilustrated)	2.00	pcs

Boiler (A000147)

Item no.	Article no.	Description	Quantity	Unit
600	017051	Hexagon screw M6x12 DIN 933 (not illustrated)	4.00	pcs
550	051646	Lambda sensor	1.00	pcs
540	007094	Lambda sensor insulating ring for LogWIN Premium 180-505	1.00	pcs
520	020095	M5x16 TT raised countersunk head screw, DIN 7500ME for VestoWIN Premium 200-202, VestoWIN Klassik 170-220	2.00	pcs
640	048554	M8 long nut	1.00	pcs
790	051069	Protective tube for combustion chamber sensor, complete	1.00	pcs
220	041498	Protective tube for exhaust gas sensor	1.00	pcs
660	006832	Proximity switch M12, inductive	1.00	pcs
380	016186	Round-head screw M6x60	2.00	pcs
450	016190	Round-head screw M6x90	4.00	pcs
320	016163	Setscrew DIN913 - M8 x 40-A2 for BioWIN 10-26	4.00	pcs
760	007626	Thermocouple	1.00	pcs
430	017183	U-Washer DIN 125B - M12 - galvanised for VarioWIN, FireWIN, BioWIN XL 35-60	4.00	pcs
590	020540	U-Washer DIN 134 - M6 - galvanised for VarioWIN, FireWIN	4.00	pcs
410	016191	Washer M6 4x40x1,5	6.00	pcs
260	019410	Wing nut M6	4.00	pcs

Cladding (A000148)

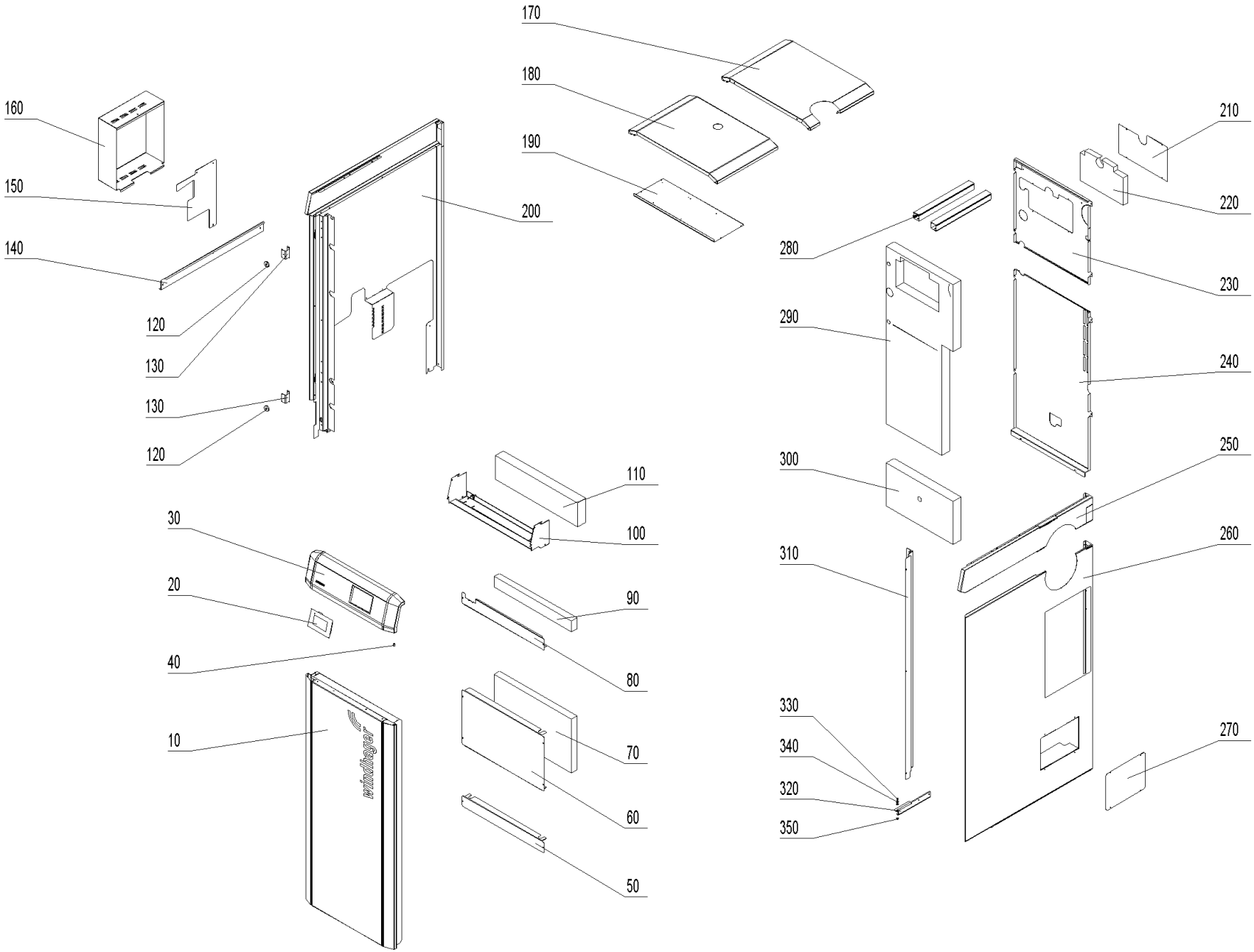

Cladding (A000148)

Item no.	Article no.	Description	Quantity	Unit
160	053812	de: Abdeckung Steckerkonsole PW24-60	1.00	pcs
30	054195	de: Bedienfeld PW	1.00	pcs
100	054163	de: Befestigungsblech Verkleidung PW24-60	1.00	pcs
130	053753	de: Haltebügel Magnet LWPT 18-36	2.00	pcs
190	053813	de: Isolierabdeckung Verbraucherr. PW24-60	1.00	pcs
110	053809	de: Isolierung Bedienfeld PW24-60	1.00	pcs
300	052778	de: Isolierung HFR Gestänge PW24-60	1.00	pcs
220	052776	de: Isolierung HFR oben PW24-60	1.00	pcs
290	052775	de: Isolierung hinten PW24-60	1.00	pcs
70	053297	de: Isolierung vorne mitte PW24-60	1.00	pcs
90	053296	de: Isolierung vorne oben PW24-60	1.00	pcs
120	001761	de: Magnet Ø31 gummiummantelt	2.00	pcs
200	054376	de: Seitenwand links PW24-60	1.00	pcs
150	054162	de: Seitenwand links unten PW24-60	1.00	pcs
270	053814	de: Verkleidung Abdeckung Reinigungsdeckel PW24-60	1.00	pcs
310	052982	de: Verkleidung Abdeckung Seitenwand rechts PW24-60	1.00	pcs
60	052983	de: Verkleidung Abdeckung vorne mitte PW24-60	1.00	pcs
80	052985	de: Verkleidung Abdeckung vorne oben PW24-60	1.00	pcs
50	052984	de: Verkleidung Abdeckung vorne unten PW24-60	1.00	pcs
210	052777	de: Verkleidung Deckel HFR oben PW24-60	1.00	pcs
170	053819	de: Verkleidung Deckel hinten PW24-60	1.00	pcs
180	053818	de: Verkleidung Deckel vorne PW24-60	1.00	pcs

Cladding (A000148)

Item no.	Article no.	Description	Quantity	Unit
230	052787	de: Verkleidung Rückwand oben PW24-60	1.00	pcs
240	051716	de: Verkleidung Rückwand unten PW24-60	1.00	pcs
320	054165	de: Verkleidung Schiene links PW24-60	1.00	pcs
140	054165	de: Verkleidung Schiene links PW24-60	1.00	pcs
250	053822	de: Verkleidung Seitenwand rechts oben PW24-60	1.00	pcs
260	053815	de: Verkleidung Seitenwand rechts PW24-60	1.00	pcs
10	054575	de: Verkleidung Tür kpl. PW24-60	1.00	pcs
280	050978	de: Wand und Deckenkanal BW2, PW	2.00	m
330	033092	de: Zapfenschrauben M5X5	1.00	pcs
340	018309	Disc 5 DIN134	2.00	pcs
40	015507	Dog point screw	1.00	pcs
350	016586	Hexagon nut M5 DIN 934	1.00	pcs
20	001009	INF8 MES INFINITY InfoWIN Touch	1.00	pcs

combustion chamber (A000152)

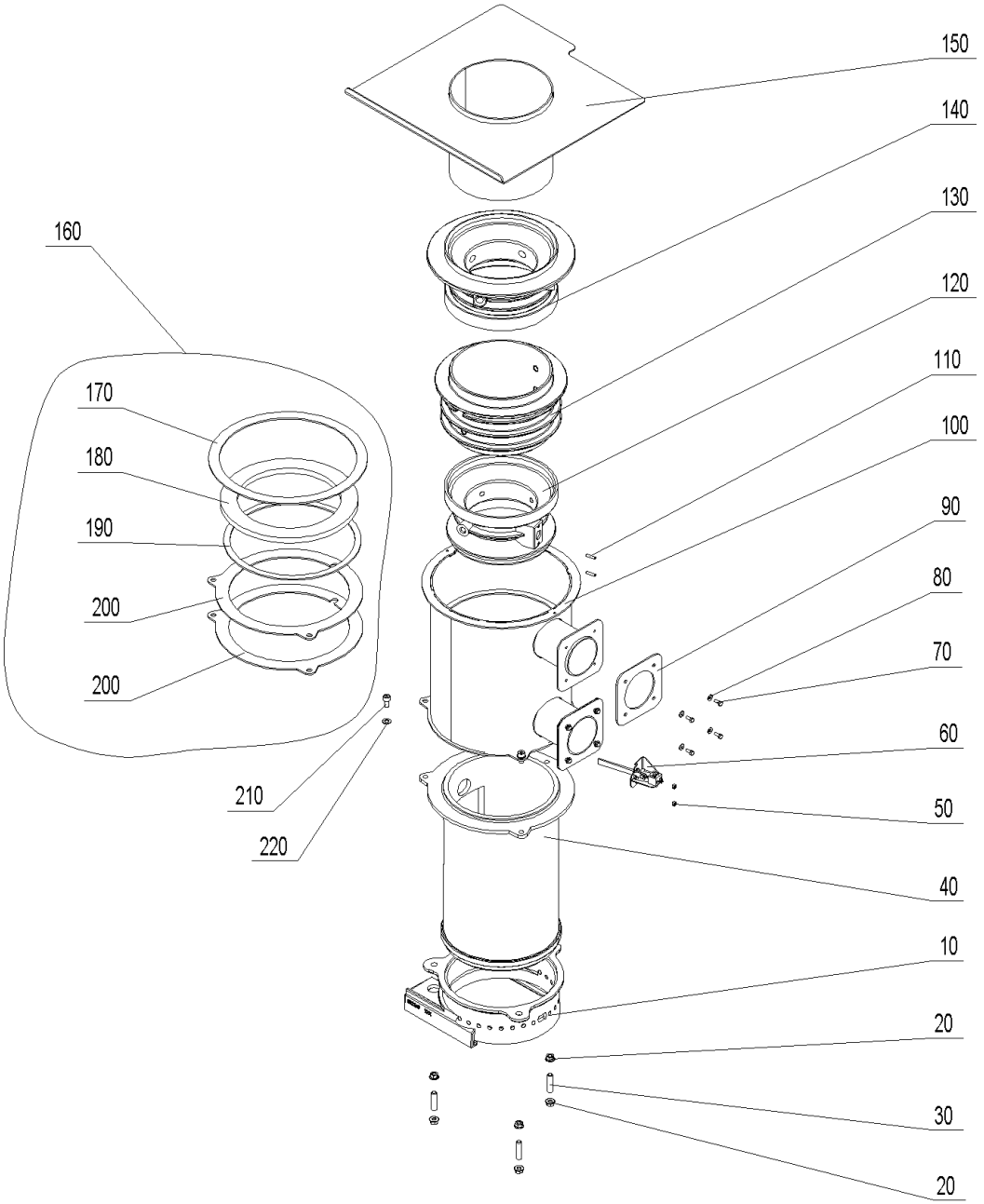

combustion chamber (A000152)

Item no.	Article no.	Description	Quantity	Unit
90	052088	de: Brennerdichtung rechts PW24-60	2.00	pcs
100	052079	de: Brenner kpl. geschw. PW40-60	1.00	pcs
200	053647	de: Dichtung Brennerfl. PW40-60	1.00	pcs
180	052090	de: Dichtung Sek/Ter PW40-60	1.00	pcs
190	052089	de: Dichtung Sekundärluftdüse PW40-60	1.00	pcs
160	054375	de: Dichtungsset zu PW 40-60	1.00	pcs
170	052091	de: Dichtung Tertiärluft PW40-60	1.00	pcs
110	054158	de: Gewindestifte mit ISK und Kegelkuppe ISO4026/DIN 913 M 5X 20 Edelstahl A2	2.00	pcs
30	052061	de: Gewindestift M10x40 A2	3.00	pcs
10	052866	de: Konus D270 PW40-60	1.00	pcs
130	052868	de: Sekundärluftdüse ob. PW40/49	1.00	pcs
120	052869	de: Sekundärluftdüse un. PW40/49	1.00	pcs
60	053336	de: Sekundärluftzündung kpl. mont. PW24-60	1.00	pcs
140	052870	de: Tertiärluftdüse PW40/49	1.00	pcs
40	053598	de: Vergaserrohr 270 PW40-60	1.00	pcs
150	052086	de: Vergaserrohr oben kpl. PW 40-60	1.00	pcs
210	053834	de: Zylinderschraube m. Innensechskant M8 x 20 - A4	6.00	pcs
80	018309	Disc 5 DIN134	8.00	pcs
220	024779	Disc 8 ISO 7089	6.00	pcs
50	017035	Hexagon nut M5 DIN 934	2.00	pcs
20	016567	Hexagon nut M10 with flange and gearing (not illustrated)	6.00	pcs
70	017020	Hexagon screw Niro DIN 933 - M5x12 - A2 for HMX, FireWIN, VarioWIN	8.00	pcs

Control panel (A000160)

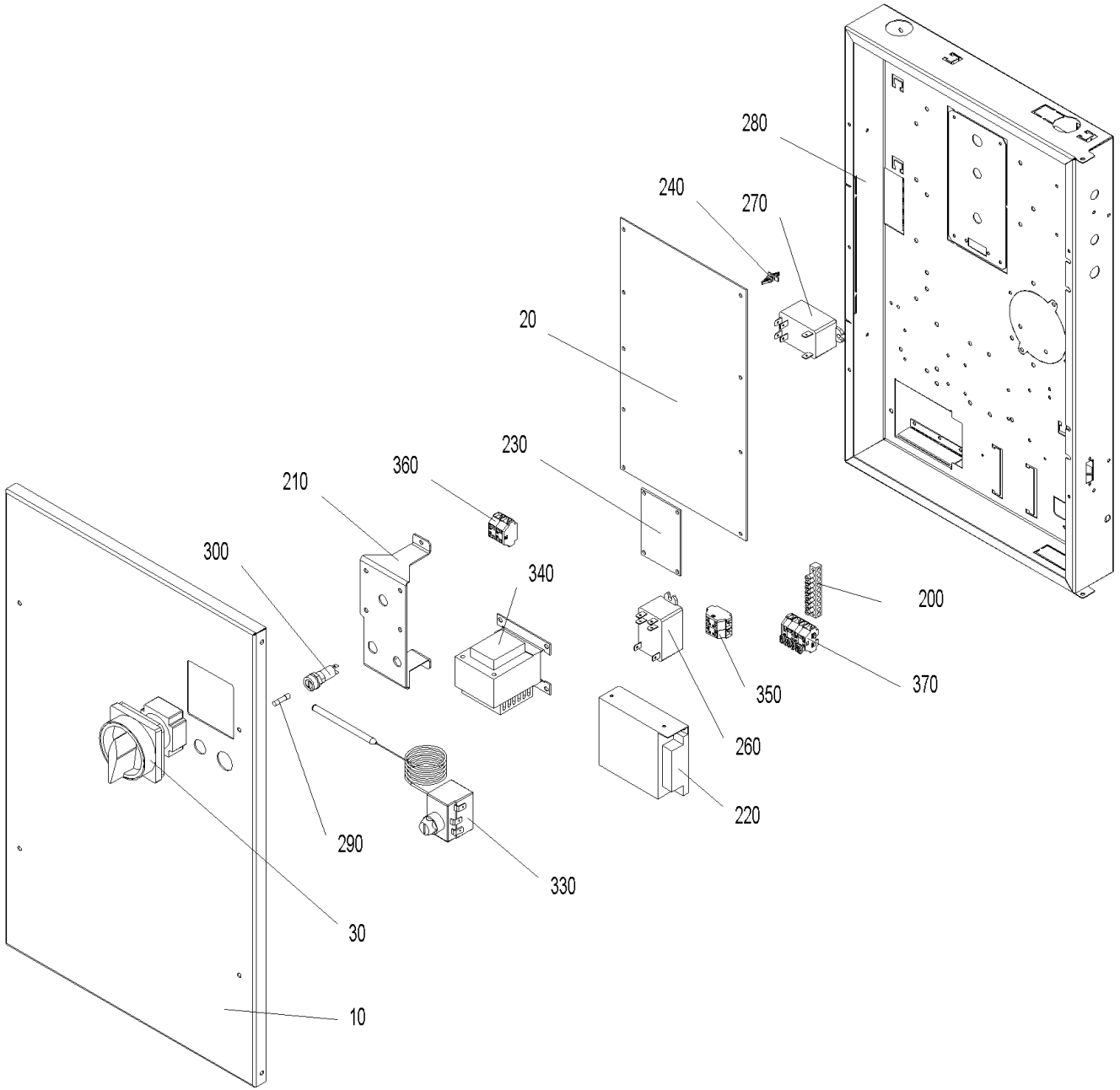

Control panel (A000160)

Item no.	Article no.	Description	Quantity	Unit
290	003228	6.3A fuse (not illustrated)	1.00	pcs
380	018140	Cylinder screw 4.2x13 DIN7981ST (not illustrated)	1.00	pcs
10	053289	de: Deckel Schaltfeld PW24-60	1.00	pcs
20	012007	de: Feuerungsautomat PW	1.00	pcs
30	012010	de: Hauptschalter 2polig 16 A PW	1.00	pcs
145	053326	de: Ka. Primärzündung PW	1.00	pcs
40	053331	de: Kabel 230V Versorgung FU`s + FA2 PW	1.00	pcs
50	053328	de: Kabel Ascheaustragung PW	1.00	pcs
60	054299	de: Kabel Ascherostschieber PW	1.00	pcs
70	054300	de: Kabel Glutbettschieber PW	1.00	pcs
80	053330	de: Kabel Heizflächenreinigung PW	1.00	pcs
90	053318	de: Kabel LON Elektrikeranschluß PW	1.00	pcs
100	053332	de: Kabel LON FA2 + STB PW	1.00	pcs
130	053385	de: Kabel ModBUS Steigschnecke PW	1.00	pcs
110	053335	de: Kabel Motor Ascheschieber PW	1.00	pcs
120	054306	de: Kabel Motor Glutbettschieber PW	1.00	pcs
140	053339	de: Kabel Netz und Heizungsnotschalter PW	1.00	pcs
150	053322	de: Kabel Saugzuggebläse PW	1.00	pcs
160	053323	de: Kabel Sekundärfluftklappe und Schalter Überfüllung PW	1.00	pcs
170	053324	de: Kabel Sekundärzündung PW	1.00	pcs
180	054016	de: Kabel Türschalter kpl. PW	1.00	pcs
190	053338	de: Kabel Versorgung ModBUS FU`s+FA2 PW	1.00	pcs

Control panel (A000160)

Item no.	Article no.	Description	Quantity	Unit
210	053984	de: Konsole Hauptschalter PW24-60	1.00	pcs
220	002053	de: Netzteil 12VDC 2,1A	1.00	pcs
230	012014	de: Platine - Relais PW	1.00	pcs
260	005075	de: Relais 16A AC 2 polig 12V DC Steuerung	1.00	pcs
300	003663	Fuse holder	1.00	pcs
250	007629	Immersion sensor PT 1000 (not illustrated)	1.00	pcs
310	502186	MES009M Immersion sensor	1.00	pcs
240	007609	PCB holder	1.00	pcs
270	005025	Power relay OMRON G7L-2A-BUB 200/240AC for PMX,BioWIN XL, BioWIN10-26,FireWIN,VarioWIN, BioWIN XL 35-60	1.00	pcs
200	009929	Terminal bar MS 8-pin 8x8mm for VarioWIN,FireWIN, BioWIN XL 35-60	1.00	pcs
320	007626	Thermocouple	1.00	pcs
330	005672	Thermostat LS1+100-6U	1.00	pcs
340	007096	Transformer for O2 sensor 18VA for LogWIN Premium 180-505	1.00	pcs
360	006833	Wago terminal block 261; 4-pin "12V GND"	1.00	pcs
350	006834	Wago terminal block 261; 4-pin "safety 1-4"	1.00	pcs
370	007656	Wago terminal block 261; 6-pin	1.00	pcs

Heating surface cleaning (A000156)

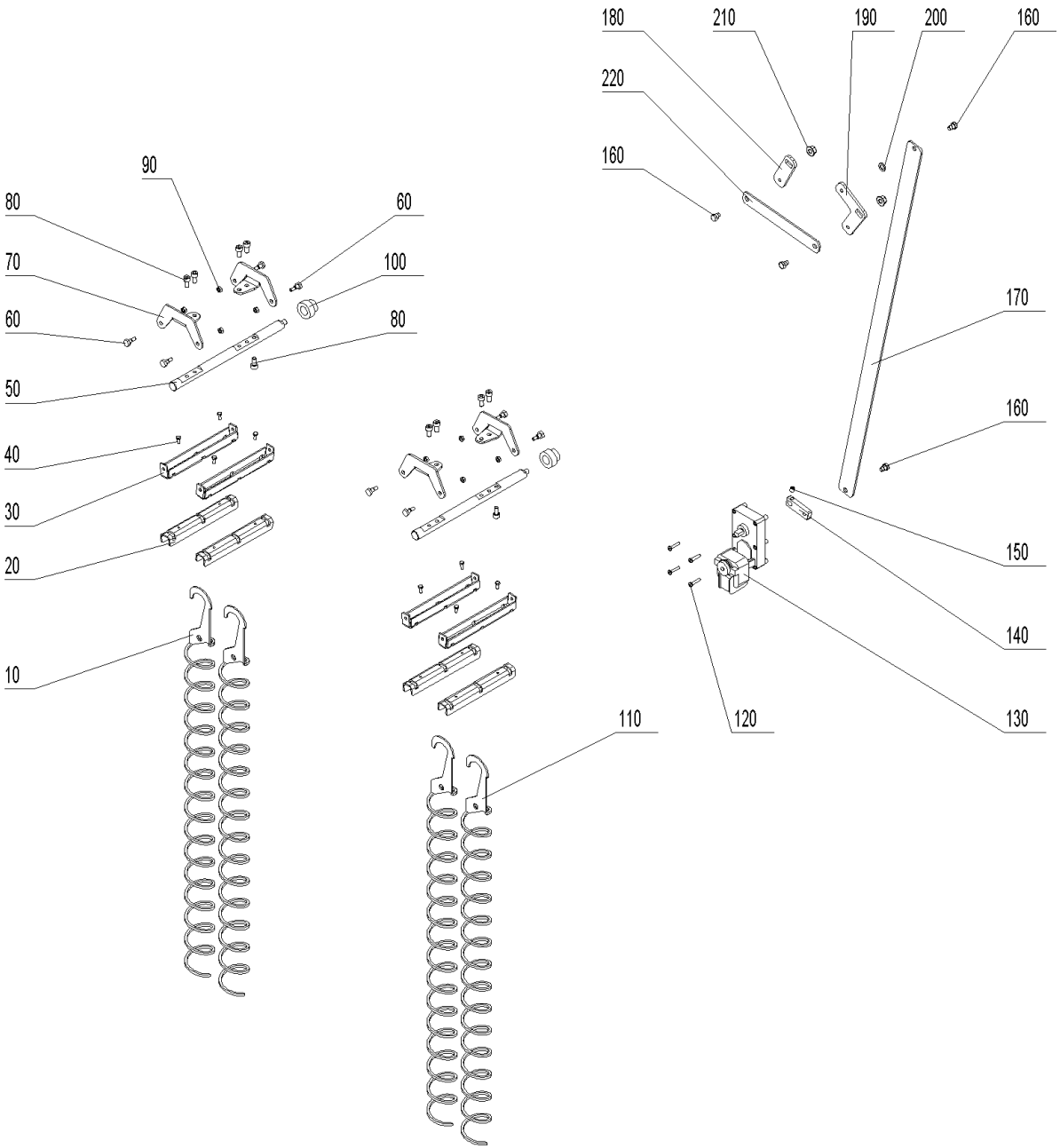

Heating surface cleaning (A000156)

Item no.	Article no.	Description	Quantity	Unit
20	047065	Bottom cleaning profile for BioWIN XL 35-60	4.00	pcs
160	012502	Collar screw	4.00	pcs
120	016837	Cylinder screw M5x25 ISO 7045	4.00	pcs
180	053281	de: Achsenhebel links HFR PW24-60	1.00	pcs
190	053280	de: Achsenhebel rechts HFR PW24-60	1.00	pcs
70	052738	de: Lagerarm für Heizflächenreinigung PW24-60	4.00	pcs
110	052768	de: Reinigungsschnecke links PW40-60	4.00	pcs
10	053981	de: Reinigungsschnecke rechts PW24-60	4.00	pcs
140	053282	de: Rüttelhebel Motor HFR PW24-60	1.00	pcs
200	018031	de: Scheibe ISO 7092 - 10 - blank	1.00	pcs
220	052781	de: Verbinder Rüttelachse HFR PW24-60	1.00	pcs
170	053284	de: Verbindung Heizflächenreinigung PW24-60	1.00	pcs
50	052737	de: Welle für Heizflächenreinigung PW24-60	2.00	pcs
80	053102	de: Zylinderschraube m. Innensechskant ISO 4762 - M 8 x 16 - A4 (DIN 912)	10.00	pcs
100	047416	Heating surface cleaning bearing for BioWIN XL 35-60	2.00	pcs
210	016567	Hexagon nut M10 with flange and gearing (not illustrated)	2.00	pcs
40	017020	Hexagon screw Niro DIN 933 - M5x12 - A2 for HMX, FireWIN, VarioWIN	8.00	pcs
130	044665	Motor	1.00	pcs
90	016596	Nut DIN 934 - M6 - A2 for VarioWIN, FireWIN, BioWIN10-26, BioWIN XL 35-60	8.00	pcs
60	006756	Screw M6 for heating surface cleaning for PMX,BioWIN 10-26,FireWIN, BioWIN XL 35-60, LogWIN Premium 180-505	8.00	pcs
150	033112	Setscrew M8x10 DIN916	1.00	pcs
30	047064	Top cleaning profile for BioWIN XL 35-60	4.00	pcs

Ignition (A000158)

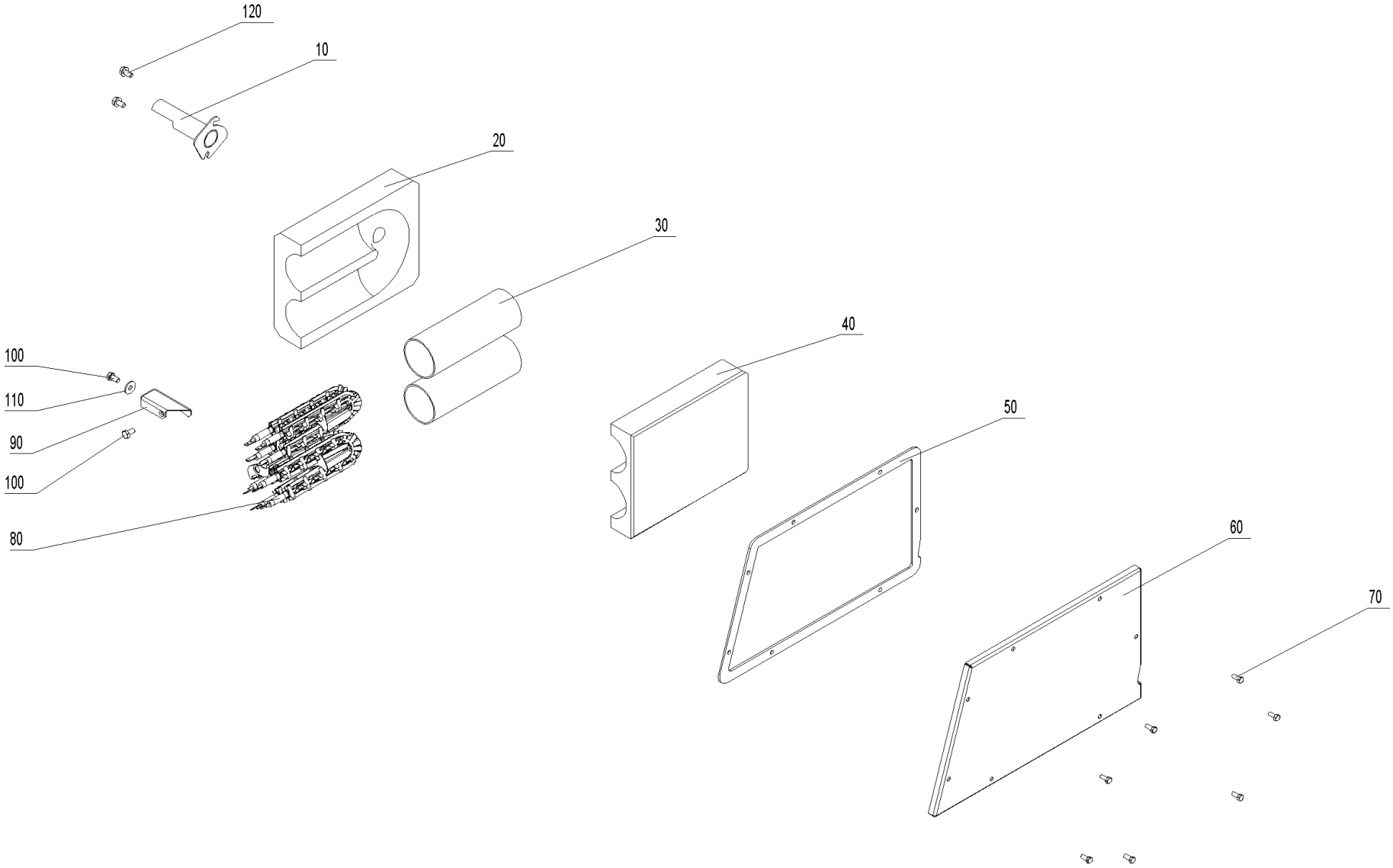

Ignition (A000158)

Item no.	Article no.	Description	Quantity	Unit
60	052717	de: Abdeckung Zündung PW24-60	1.00	pcs
90	052387	de: Anschlag Zündung PW24-60	1.00	pcs
50	052993	de: Dichtung Zündung PW24-60	1.00	pcs
20	052713	de: Isolierstein unten Zündung PW24-60	1.00	pcs
10	052716	de: Zündrohr kpl. PW24/30	1.00	pcs
10	052766	de: Zündrohr kpl. PW40-60	1.00	pcs
110	031753	Disc 6 ISO 7093	1.00	pcs
100	017051	Hexagon screw M6x12 DIN 933 (not illustrated)	2.00	pcs
120	031549	Hexagon screw M6x12 DIN 7500	2.00	pcs
70	017020	Hexagon screw Niro DIN 933 - M5x12 - A2 for HMX, FireWIN, VarioWIN	7.00	pcs
80	055201	Ignition element BioWIN10-26, FireWIN from lot 15, VarioWIN from lot 15 BioWIN XL, LWK	1.00	pcs
30	050489	Ignition tube LWP18-50, LWK	2.00	pcs
40	007484	Insulating stone top for automatic ignition LWP18-50, LWK	1.00	pcs

Air control PL (A000159)

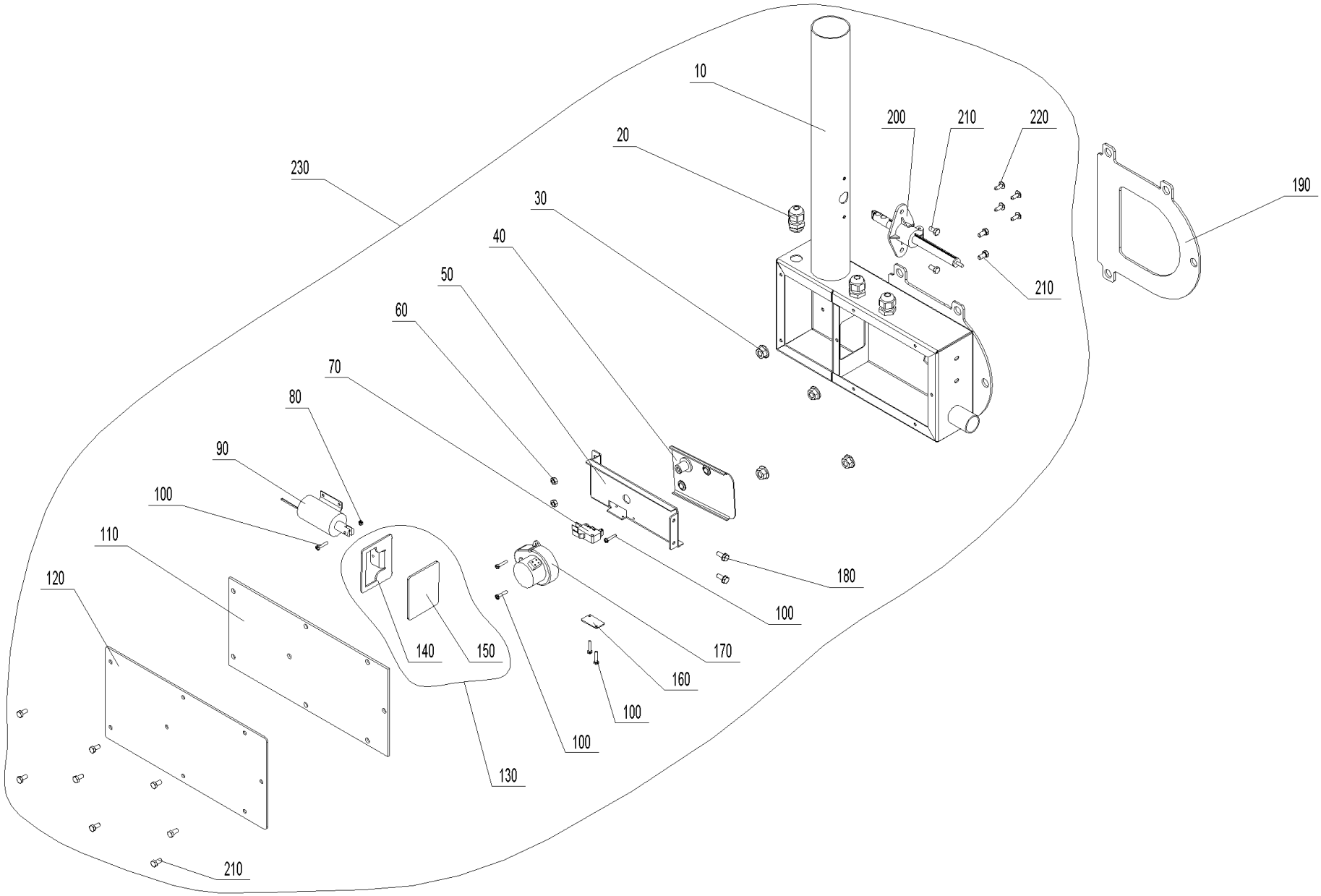

Air control PL (A000159)

Item no.	Article no.	Description	Quantity	Unit
70	009277	Air control microswitch	1.00	pcs
220	018139	Cylinder screw 4.2x13 DIN7981SP (not illustrated)	4.00	pcs
140	052885	de: Absperrpl. PW24-60	1.00	pcs
130	054578	de: Absperrplatte kpl. PW24-60	1.00	pcs
50	052884	de: Befestigungsblende PW24-60	1.00	pcs
120	052881	de: Deckel Luftschacht PW24-60	1.00	pcs
150	052886	de: Dichtung Absperrplatte PW24-60	1.00	pcs
110	052882	de: Dichtung Deckel Luftschacht PW24-60	1.00	pcs
190	052890	de: Dichtung Flansch Luftschacht PW24-60	1.00	pcs
40	053649	de: Luftklappe PW24-60	1.00	pcs
230	052893	de: Luftregelung kpl. PW24-60	1.00	pcs
10	052891	de: Luftschacht kpl. PW24-60	1.00	pcs
170	009579	de: Motor - Luftklappen PW24-60	1.00	pcs
160	051044	de: Platte Mikroschalter PW24-60	1.00	pcs
200	052878	de: Strömungsmessumformer PW24-60	1.00	pcs
100	016766	de: Zyl.-Schrauben M3x16 verz.m.KS. DIN 7985	6.00	pcs
90	052911	de: Zylindermagnet PW24-60	1.00	pcs
80	016551	Hexagon nut M3 DIN 934	1.00	pcs
60	017035	Hexagon nut M5 DIN 934	2.00	pcs
30	016553	Hexagon nut M8 with flange and gearing	4.00	pcs
180	031545	Hexagon screw M5x12 DIN 7500 (not ilustrated)	2.00	pcs
210	017020	Hexagon screw Niro DIN 933 - M5x12 - A2 for HMX, FireWIN, VarioWIN	12.00	pcs

Air control PL (A000159)

Item no.	Article no.	Description	Quantity	Unit
20	006340	Mount connections PG9	3.00	pcs

Air control SL/TL (A000161)

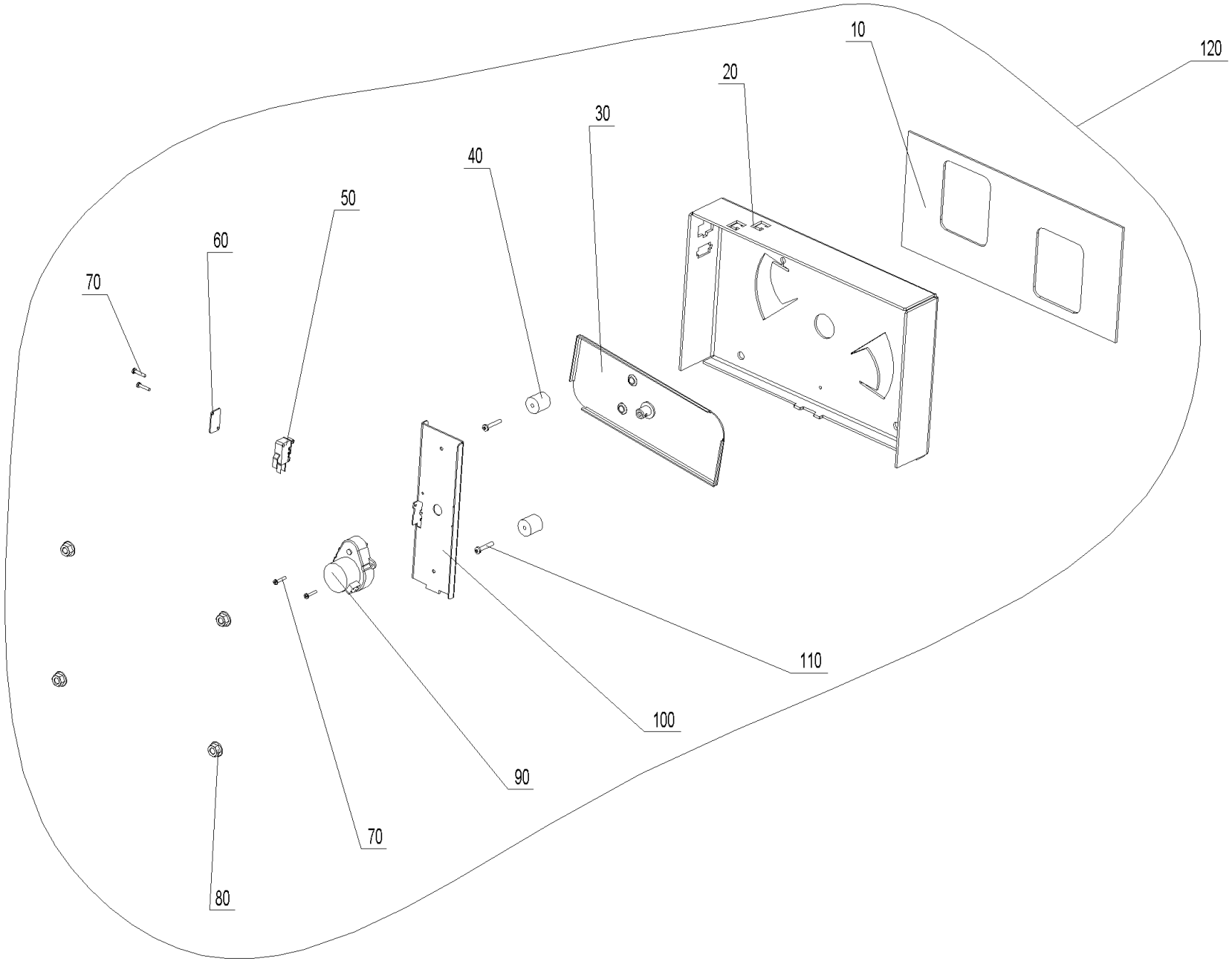

Air control SL/TL (A000161)

Item no.	Article no.	Description	Quantity	Unit
50	009277	Air control microswitch	1.00	pcs
40	053829	de: Abstandswelle PW 24-60	2.00	pcs
100	052899	de: Befestigungsblech Stellmotor PW24-60	1.00	pcs
10	052900	de: Dichtung Luftregelung S/T PW24-60	1.00	pcs
20	052897	de: Konsole Luftregelung PW24-60	1.00	pcs
30	053648	de: Luftklappe PW24-60	1.00	pcs
120	052896	de: Luftregelung kpl. PW24-60	1.00	pcs
90	009579	de: Motor - Luftklappen PW24-60	1.00	pcs
60	051044	de: Platte Mikroschalter PW24-60	1.00	pcs
70	016766	de: Zyl.-Schrauben M3x16 verz.m.KS. DIN 7985	4.00	pcs
110	016802	de: Zyl.-Schrauben M4x25 verz.m.KS DIN 7985	2.00	pcs
80	016553	Hexagon nut M8 with flange and gearing	4.00	pcs

Ash conveyor (A000154)

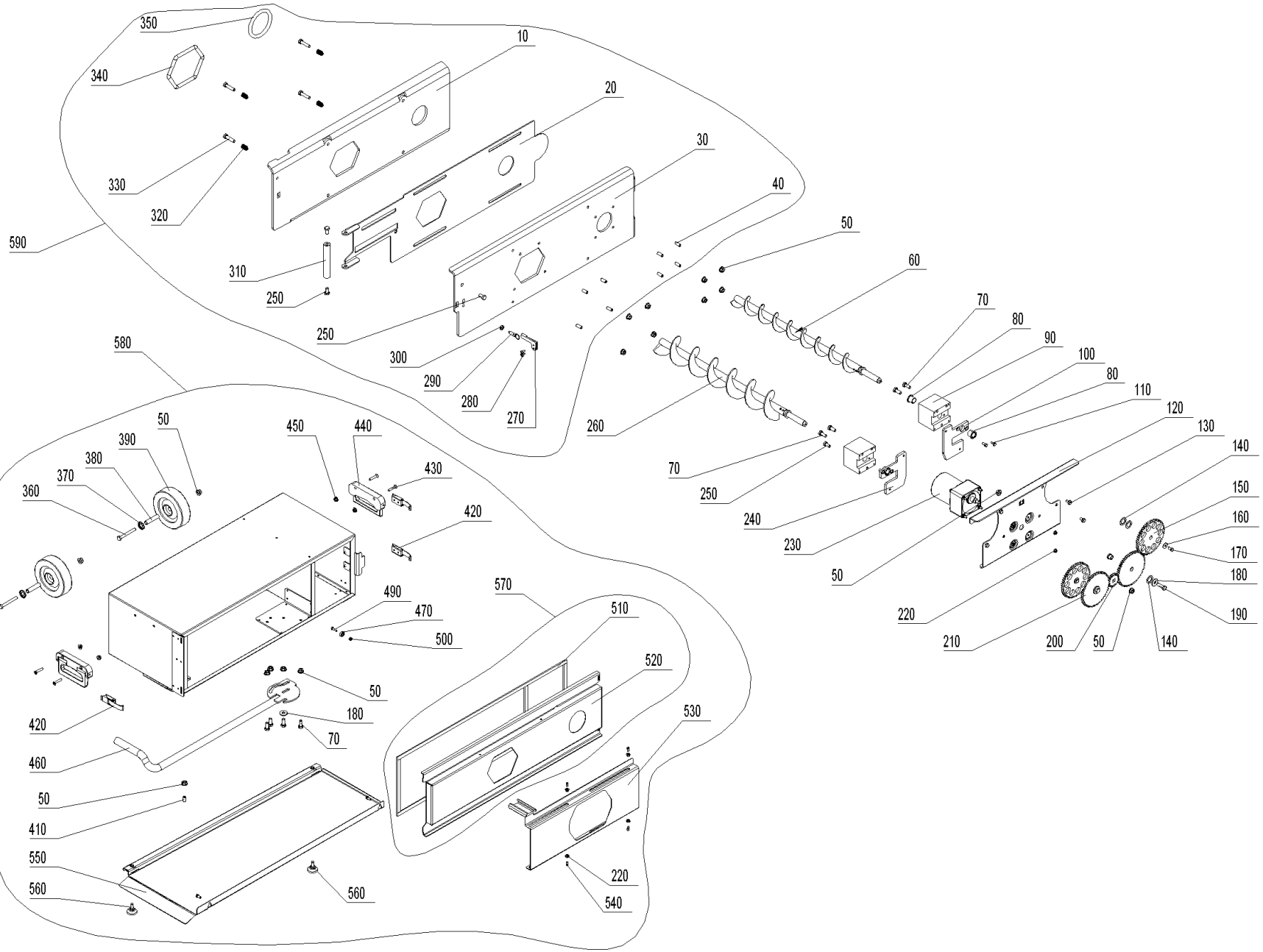

Ash conveyor (A000154)

Item no.	Article no.	Description	Quantity	Unit
90	044680	Ash removal flange, complete with bearing bushes for BioWIN 10-26 (Only BioWIN Exklusiv), BioWIN XL 35-60	2.00	pcs
230	050901	Auger motor SPG	1.00	pcs
280	018140	Cylinder screw 4.2x13 DIN7981ST (not illustrated)	2.00	pcs
370	054574	de: Achsenklemmring ohne Kappe 12mm FDST brüniert	2.00	pcs
270	053993	de: Arretierungslasche PW24-60	1.00	pcs
60	052193	de: Ascheaustragung Schnecke hinten kpl. PW24-60	1.00	pcs
260	052217	de: Ascheaustragung Schnecke vorne kpl. PW24-60	1.00	pcs
570	054576	de: Aschebox Deckel kpl. PW24-60	1.00	pcs
520	054493	de: Aschebox Deckel PW24-60	1.00	pcs
30	053990	de: Ascheboxflansch PW24-60	1.00	pcs
590	053994	de: Ascheboxflansch PW24-60	1.00	pcs
460	054471	de: Aschebox Griff PW24-60	1.00	pcs
380	054490	de: Aschebox Lagerrohr PW24-60	2.00	pcs
550	054485	de: Aschebox Sockel PW24-60	1.00	pcs
530	054494	de: Aschebox Verschluß PW24-60	1.00	pcs
10	053992	de: Dichtblech Ascheboxflansch PW24-60	1.00	pcs
350	053998	de: Dichtung AAT hinten PW24-60	1.00	pcs
340	052375	de: Dichtung AAT vorne PW24-60	1.00	pcs
510	054571	de: Dichtung Aschelade PW24-60	1.00	pcs
320	053997	de: Druckfeder	4.00	pcs
240	051169	de: Flanschplatte links AAT PW24-60	1.00	pcs
100	052371	de: Flanschplatte rechts AAT PW24-60	1.00	pcs

Ash conveyor (A000154)

Item no.	Article no.	Description	Quantity	Unit
40	033536	de: Gewindestift M8 x 20 VZ, DIN 913	8.00	pcs
440	054570	de: Griff	2.00	pcs
310	053995	de: Griff Aschelade PW24-60	1.00	pcs
120	052197	de: Konsole AAT PW24-60	1.00	pcs
580	052700	de: PW9 Aschebox zu Hackgut-Vergaser	1.00	pcs
470	053906	de: Rillenkugellager	2.00	pcs
140	047545	de: Scheibe D25/16,2x1,5 verz.	6.00	pcs
20	053991	de: Schieber Ascheboxflansch PW24-60	1.00	pcs
330	031550	de: Sechskantschraube DIN 931 - M8x35 - 8.8 - verzinkt	4.00	pcs
490	015025	de: Sechskantschraube DIN 933 - M5x16 - 8.8 - verzinkt	2.00	pcs
360	033093	de: Sechskantschraube DIN 933 - M8x65 - 8.8	2.00	pcs
430	054573	de: Senkschraube M6x30 DIN965	4.00	pcs
210	052195	de: Stirnrad Getriebe PW24-60	2.00	pcs
200	052372	de: Stirnrad Motor PW24-60	1.00	pcs
150	052196	de: Stirnrad Schnecke PW24-60	2.00	pcs
540	033092	de: Zapfenschrauben M5X5	4.00	pcs
160	031753	Disc 6 ISO 7093	2.00	pcs
180	031755	Disc 8 ISO 7093	3.00	pcs
80	012508	Friction bearing with connector	4.00	pcs
220	016565	Hexagon nut M5 with flange and gearing (not illustrated)	8.00	pcs
300	016659	Hexagon nut M8 DIN434	1.00	pcs
50	016553	Hexagon nut M8 with flange and gearing	17.00	pcs

Ash conveyor (A000154)

Item no.	Article no.	Description	Quantity	Unit
450	016566	Hexagon nut with flange and gearing M6	4.00	pcs
70	017873	Hexagon screw DIN 933 - M8x20 - A2 for VarioWIN, FireWIN	8.00	pcs
110	031545	Hexagon screw M5x12 DIN 7500 (not ilustrated)	4.00	pcs
170	017051	Hexagon screw M6x12 DIN 933 (not illustrated)	2.00	pcs
130	031549	Hexagon screw M6x12 DIN 7500	4.00	pcs
250	017872	Hexagon screw M8x16, DIN 933 for BioWIN XL 35-60	4.00	pcs
190	017191	Hexagon screw M8x25 DIN 933	2.00	pcs
560	009991	Leg - JTLO 38 - M8x16 for VarioWIN	2.00	pcs
290	007191	Locking bolt with pull ring GN 717-5-M8-A-ST	1.00	pcs
500	016727	Lock nut M5	2.00	pcs
410	051836	Spring-loaded pressure piece M8	0.00	pcs
420	009546	Spring lock	3.00	pcs
390	006888	Wheel AG 125-12	2.00	pcs

Ash removal (A000150)

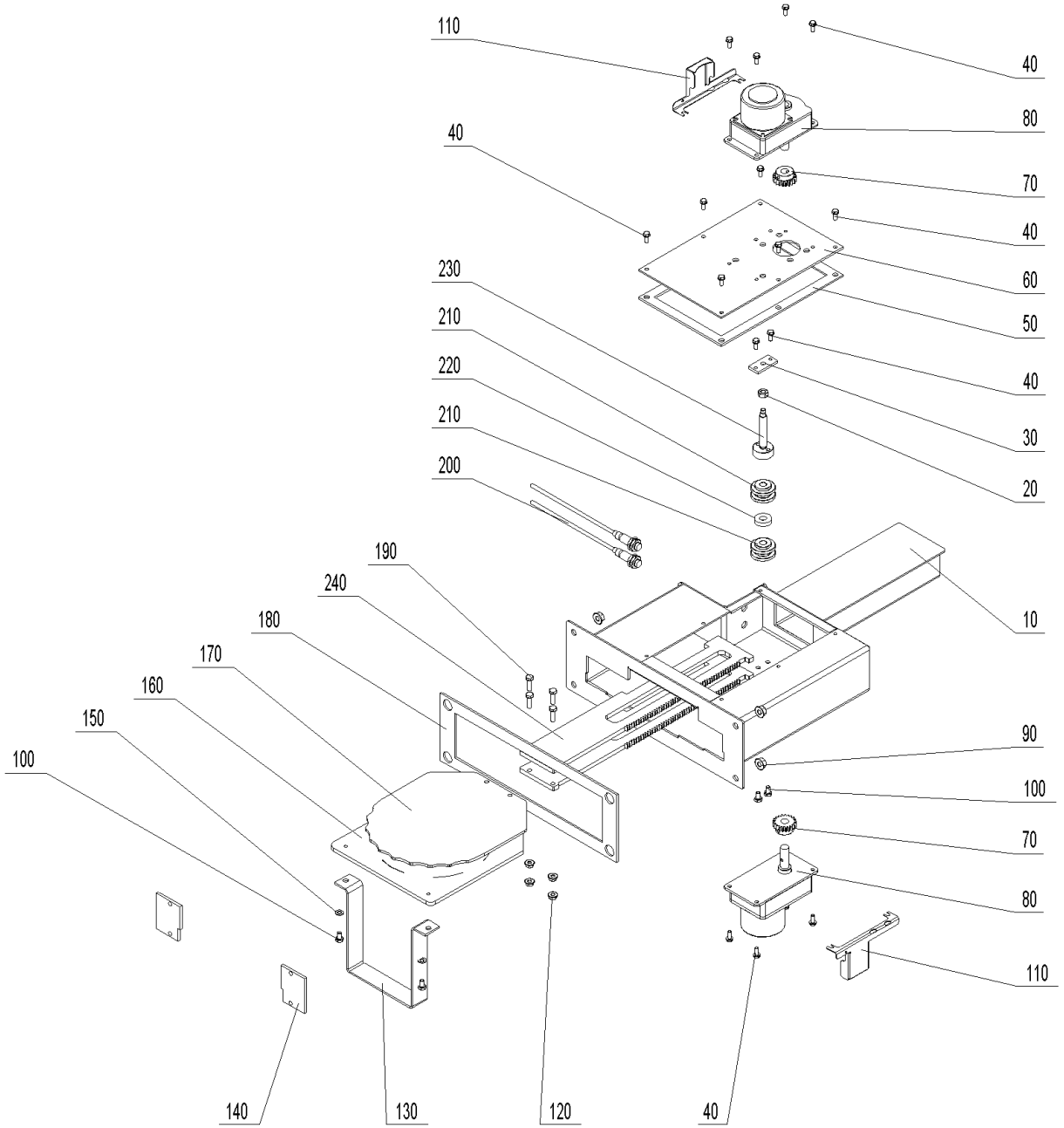

Ash removal (A000150)

Item no.	Article no.	Description	Quantity	Unit
210	007125	Bearing for vibrating drive	4.00	pcs
160	052163	de: Ascheschieber PW40-60	1.00	pcs
130	052907	de: Ascheverdrängblech PW24-60	1.00	pcs
60	052148	de: Deckel oben Entaschung PW24-60	1.00	pcs
50	052151	de: Dichtung Deckel Entaschung PW24-60	1.00	pcs
180	052152	de: Dichtung Fl. Entaschung PW24-60	1.00	pcs
220	052149	de: Distanzscheibe PW24-60	1.00	pcs
140	052904	de: Führungsplatte Entaschung PW24/30	0.00	pcs
170	052160	de: Glutbettschieber für PW40-60	1.00	pcs
110	054167	de: Kabelabdeckung Motor PW24-60	2.00	pcs
10	052140	de: Konsole Entaschung PW24-60	1.00	pcs
30	052150	de: Lagerungsblech PW24-60	1.00	pcs
80	053641	de: Motor - Entaschung zu PuroWIN	1.00	pcs
150	031713	de: Scheibe ISO 7089 - 6 - A2	2.00	pcs
70	052154	de: Stirnrad PW24-60	2.00	pcs
230	052153	de: Welle Lagerung PW24-60	1.00	pcs
240	053651	de: Zahnstange ob. PW40-60	2.00	pcs
90	016553	Hexagon nut M8 with flange and gearing	4.00	pcs
120	016566	Hexagon nut with flange and gearing M6	4.00	pcs
100	015026	Hexagon screw DIN 933 - M6x10 - 8.8 - galvanised for VarioWIN, FireWIN	6.00	pcs
40	031545	Hexagon screw M5x12 DIN 7500 (not ilustrated)	20.00	pcs
190	015471	Hexagon screw M6x20 DIN 933	4.00	pcs

Ash removal (A000150)

Item no.	Article no.	Description	Quantity	Unit
20	015992	Nut M8 DIN 934 V2 - LogWIN Klassik pellet ready	1.00	pcs
200	006832	Proximity switch M12, inductive	2.00	pcs

Boiler (A000147)

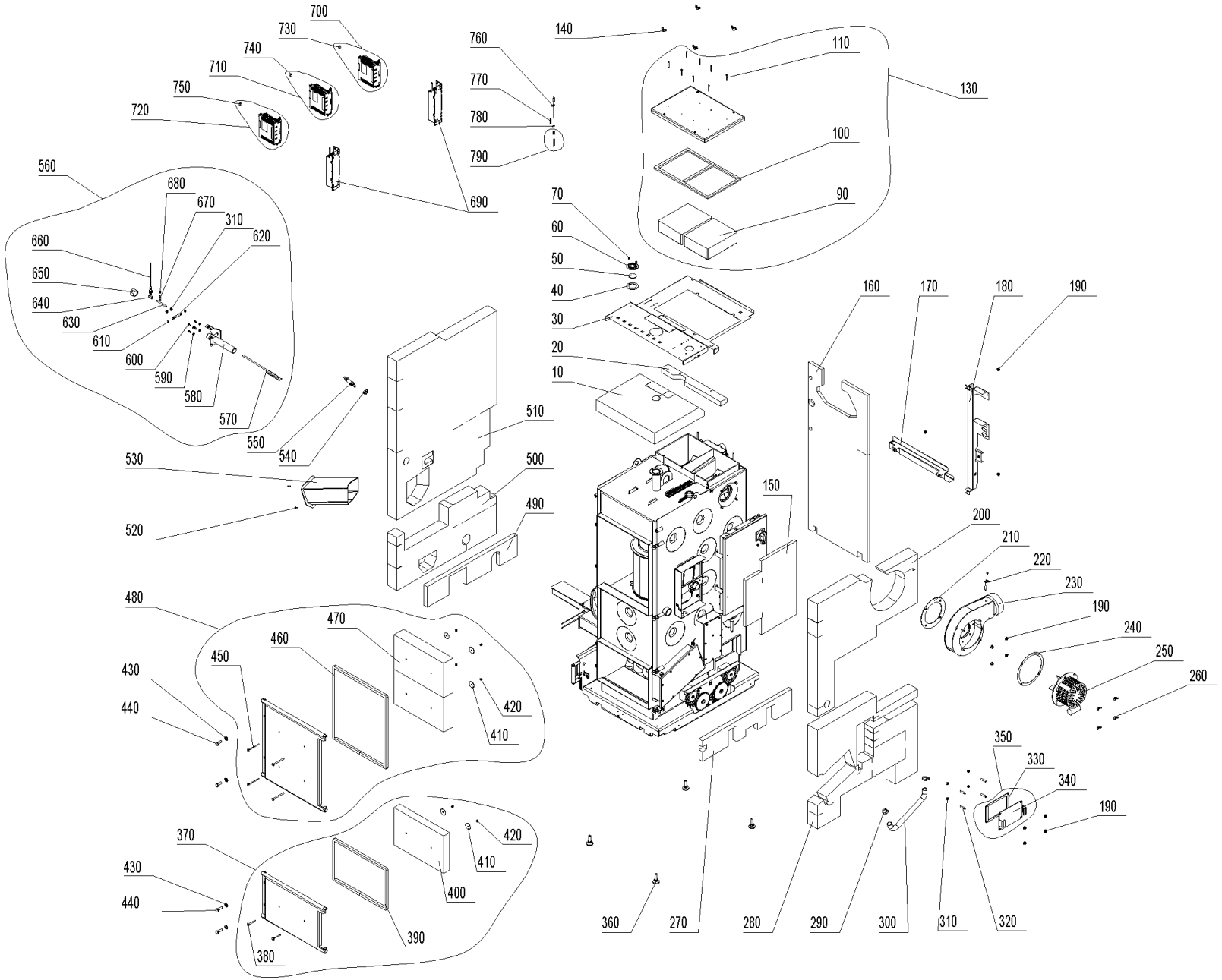

Boiler (A000147)

Item no.	Article no.	Description	Quantity	Unit
210	050825	Blower seal LWK	1.00	pcs
420	016192	Cap nut	6.00	pcs
350	047991	Coasting surface bottom cover for BioWIN XL 35-60	1.00	pcs
770	050647	Combustion chamber sensor spring	1.00	pcs
110	016719	Cylinder drilling screw 4.2 x 38 DIN7504	8.00	pcs
340	047188	de: Abdeckblech BW60, PW	1.00	pcs
250	051039	de: Abgasgebläse kpl. LWK, PW	1.00	pcs
370	054581	de: Aschetür mont. PW24-60	1.00	pcs
390	052378	de: Dichtschnur Ascheür PW24-60	1.00	pcs
460	052381	de: Dichtschnur Heiztür PW24-60	1.00	pcs
330	047190	de: Dichtung Abdeckblende 60BW, PW	1.00	pcs
240	054468	de: Dichtung Gebläsemotor PW24-60	1.00	pcs
100	051868	de: Dichtung Reinigungsdeckel PW24-49	1.00	pcs
40	051712	de: Dichtung Schauloch PW24-60	1.00	pcs
730	054197	de: Eprom auf STOK program. zu FU PuroWIN Zuführung direkt / pneumatisch	1.00	pcs
750	054199	de: Eprom auf TANK program. zu FU PuroWIN Zuführung pneumatisch	1.00	pcs
740	054196	de: Eprom RAS program. zu FU PuroWIN Zuführung direkt	1.00	pcs
710	054847	de: ET-SET: FU mit Eprom RAS zu Zuführung direkt PuroWIN	1.00	pcs
700	054848	de: ET-SET: FU mit Eprom STOK zu Zuführung direkt/pneumatisch PuroWIN	1.00	pcs
720	054849	de: ET-SET: FU mit Eprom TANK zu Zuführung pneumatisch PuroWIN	1.00	pcs
690	054185	de: Filter zu FU, 0,75kW, 1-Phase, PuroWIN	2.00	pcs
140	019414	de: Flügelmutter ähnl. DIN 315 - M8 - St - verzinkt	4.00	pcs

Boiler (A000147)

Item no.	Article no.	Description	Quantity	Unit
570	052176	de: Fühler kpl. PW24/30	1.00	pcs
570	054467	de: Fühler kpl. PW40-60	1.00	pcs
230	053011	de: Gebläsekasten lackiert LWK, PW	1.00	pcs
630	017032	de: Gewindebolzen M8x80 verzinkt	1.00	pcs
50	000307	de: Glasscheibe BOROFLOAT Ø 45/4 mm	1.00	pcs
480	054580	de: Heiztür mont. PW24-60	1.00	pcs
290	029424	de: IDEAL-Schlauchklemmen 22-32mm	2.00	pcs
30	052976	de: Isolierabdeckung oben PW24-60	1.00	pcs
400	052380	de: Isolierstein Aschetür PW24-60	1.00	pcs
470	052384	de: Isolierstein Heiztür PW24-60	2.00	pcs
90	051862	de: Isolierstein NHF links PW24-60	2.00	pcs
160	052732	de: Isolierung hinten oben PW24-60	1.00	pcs
490	053293	de: Isolierung links innen PW24-60	1.00	pcs
510	052774	de: Isolierung links PW24-60	1.00	pcs
500	053295	de: Isolierung links unten PW24-60	1.00	pcs
20	053810	de: Isolierung oben hinten PW24-60	1.00	pcs
10	052977	de: Isolierung oben PW24-60	1.00	pcs
270	053292	de: Isolierung rechts innen PW24-60	1.00	pcs
200	052189	de: Isolierung rechts PW24-60	1.00	pcs
280	053294	de: Isolierung rechts unten PW24-60	1.00	pcs
150	052736	de: Isolierung Schaltfeld PW24-60	1.00	pcs
170	052996	de: Kabelschacht unten PW24-60	1.00	pcs

Boiler (A000147)

Item no.	Article no.	Description	Quantity	Unit
180	052704	de: Kableschacht senkrecht PW24-60	1.00	pcs
650	008850	de: Kappe Nr. 300, 1" schwarz	1.00	pcs
620	052099	de: Level Controll Achse PW24-60	1.00	pcs
580	052734	de: Level Controll Rohr kpl. PW24/30	1.00	pcs
580	052735	de: Level Controll Rohr kpl. PW40-60	1.00	pcs
560	054176	de: Level Control montiert PW24/30	1.00	pcs
560	054175	de: Level Control montiert PW40-60	1.00	pcs
310	031154	de: Mutter M8 - A4	4.00	pcs
800	009185	de: Netzfilter FN2020-10-06 zu PuroWIN	1.00	pcs
130	054579	de: Reinigungsdeckel montiert PW24-60	1.00	pcs
60	087300	de: Rosette für Schauglas	1.00	pcs
300	052989	de: Schlauch Airmetall PU1 PW24-60	1.00	pcs
530	053114	de: Schneckenrohr kpl. PW24/30	1.00	pcs
530	052731	de: Schneckenrohr kpl. PW40-60	1.00	pcs
440	017865	de: Sechskantschraube M12x35 - 8.8	4.00	pcs
610	052174	de: Sicherungsring 12 X 1	2.00	pcs
780	031274	Eyelet M6	1.00	pcs
360	009994	Foot M12X40 JTB38 for HMX, EasyWIN Klassik/Premium 180, LogWIN Premium 180-505	4.00	pcs
680	016594	Hexagon nut M6 DIN 934	1.00	pcs
190	016553	Hexagon nut M8 with flange and gearing	11.00	pcs
670	015041	Hexagon screw DIN 933 - M6x25 - 8.8 - galvanised for VarioWIN, FireWIN	1.00	pcs
70	031545	Hexagon screw M5x12 DIN 7500 (not ilustrated)	2.00	pcs

Boiler (A000147)

Item no.	Article no.	Description	Quantity	Unit
600	017051	Hexagon screw M6x12 DIN 933 (not illustrated)	4.00	pcs
550	051646	Lambda sensor	1.00	pcs
540	007094	Lambda sensor insulating ring for LogWIN Premium 180-505	1.00	pcs
520	020095	M5x16 TT raised countersunk head screw, DIN 7500ME for VestoWIN Premium 200-202, VestoWIN Klassik 170-220	2.00	pcs
640	048554	M8 long nut	1.00	pcs
790	051069	Protective tube for combustion chamber sensor, complete	1.00	pcs
220	041498	Protective tube for exhaust gas sensor	1.00	pcs
660	006832	Proximity switch M12, inductive	1.00	pcs
380	016186	Round-head screw M6x60	2.00	pcs
450	016190	Round-head screw M6x90	4.00	pcs
320	016163	Setscrew DIN913 - M8 x 40-A2 for BioWIN 10-26	4.00	pcs
760	007626	Thermocouple	1.00	pcs
430	017183	U-Washer DIN 125B - M12 - galvanised for VarioWIN, FireWIN, BioWIN XL 35-60	4.00	pcs
590	020540	U-Washer DIN 134 - M6 - galvanised for VarioWIN, FireWIN	4.00	pcs
410	016191	Washer M6 4x40x1,5	6.00	pcs
260	019410	Wing nut M6	4.00	pcs

Cladding (A000148)

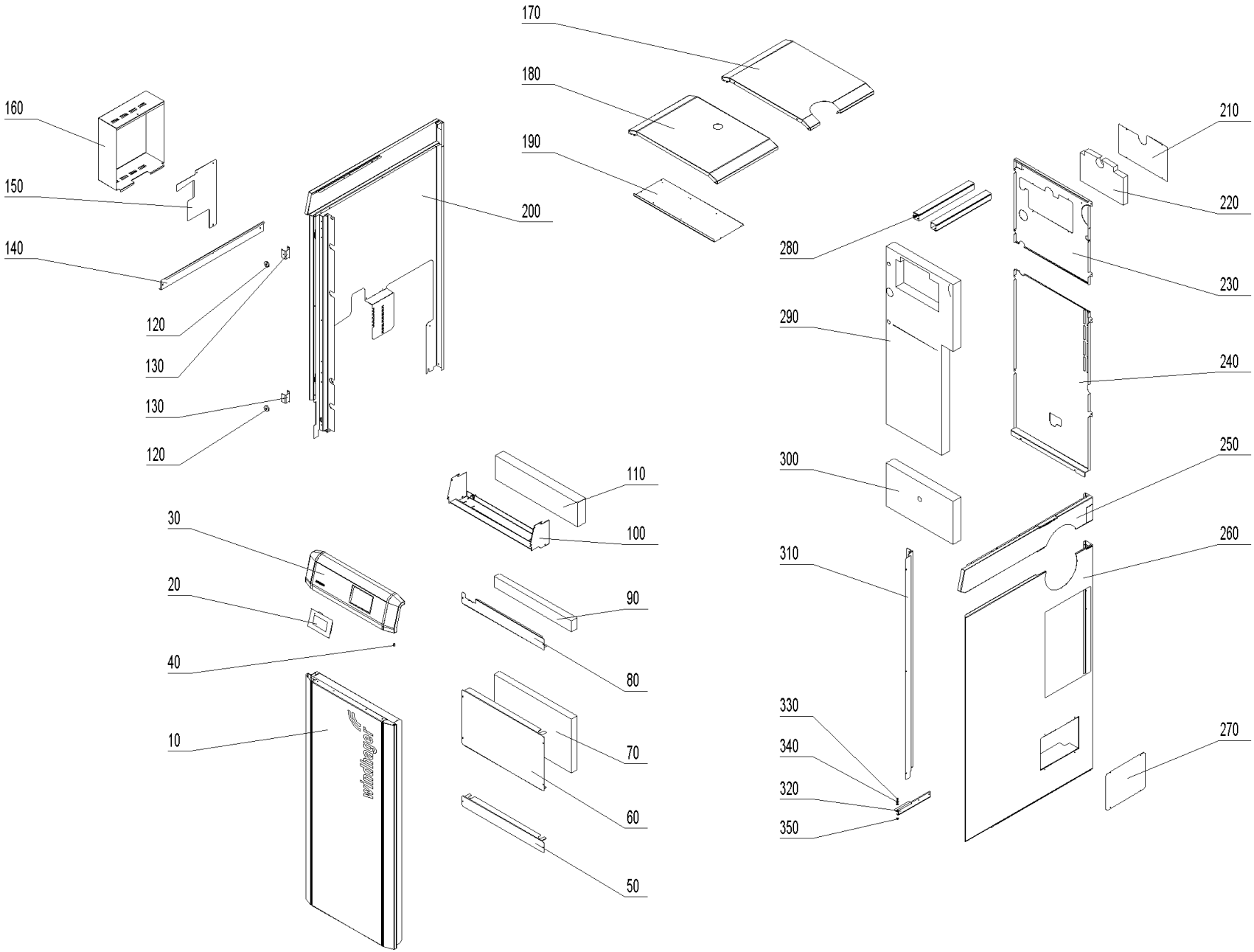

Cladding (A000148)

Item no.	Article no.	Description	Quantity	Unit
160	053812	de: Abdeckung Steckerkonsole PW24-60	1.00	pcs
30	054195	de: Bedienfeld PW	1.00	pcs
100	054163	de: Befestigungsblech Verkleidung PW24-60	1.00	pcs
130	053753	de: Haltebügel Magnet LWPT 18-36	2.00	pcs
190	053813	de: Isolierabdeckung Verbraucherr. PW24-60	1.00	pcs
110	053809	de: Isolierung Bedienfeld PW24-60	1.00	pcs
300	052778	de: Isolierung HFR Gestänge PW24-60	1.00	pcs
220	052776	de: Isolierung HFR oben PW24-60	1.00	pcs
290	052775	de: Isolierung hinten PW24-60	1.00	pcs
70	053297	de: Isolierung vorne mitte PW24-60	1.00	pcs
90	053296	de: Isolierung vorne oben PW24-60	1.00	pcs
120	001761	de: Magnet Ø31 gummiummantelt	2.00	pcs
200	054376	de: Seitenwand links PW24-60	1.00	pcs
150	054162	de: Seitenwand links unten PW24-60	1.00	pcs
270	053814	de: Verkleidung Abdeckung Reinigungsdeckel PW24-60	1.00	pcs
310	052982	de: Verkleidung Abdeckung Seitenwand rechts PW24-60	1.00	pcs
60	052983	de: Verkleidung Abdeckung vorne mitte PW24-60	1.00	pcs
80	052985	de: Verkleidung Abdeckung vorne oben PW24-60	1.00	pcs
50	052984	de: Verkleidung Abdeckung vorne unten PW24-60	1.00	pcs
210	052777	de: Verkleidung Deckel HFR oben PW24-60	1.00	pcs
170	053819	de: Verkleidung Deckel hinten PW24-60	1.00	pcs
180	053818	de: Verkleidung Deckel vorne PW24-60	1.00	pcs

Cladding (A000148)

Item no.	Article no.	Description	Quantity	Unit
230	052787	de: Verkleidung Rückwand oben PW24-60	1.00	pcs
240	051716	de: Verkleidung Rückwand unten PW24-60	1.00	pcs
320	054165	de: Verkleidung Schiene links PW24-60	1.00	pcs
140	054165	de: Verkleidung Schiene links PW24-60	1.00	pcs
250	053822	de: Verkleidung Seitenwand rechts oben PW24-60	1.00	pcs
260	053815	de: Verkleidung Seitenwand rechts PW24-60	1.00	pcs
10	054575	de: Verkleidung Tür kpl. PW24-60	1.00	pcs
280	050978	de: Wand und Deckenkanal BW2, PW	2.00	m
330	033092	de: Zapfenschrauben M5X5	1.00	pcs
340	018309	Disc 5 DIN134	2.00	pcs
40	015507	Dog point screw	1.00	pcs
350	016586	Hexagon nut M5 DIN 934	1.00	pcs
20	001009	INF8 MES INFINITY InfoWIN Touch	1.00	pcs

combustion chamber (A000152)

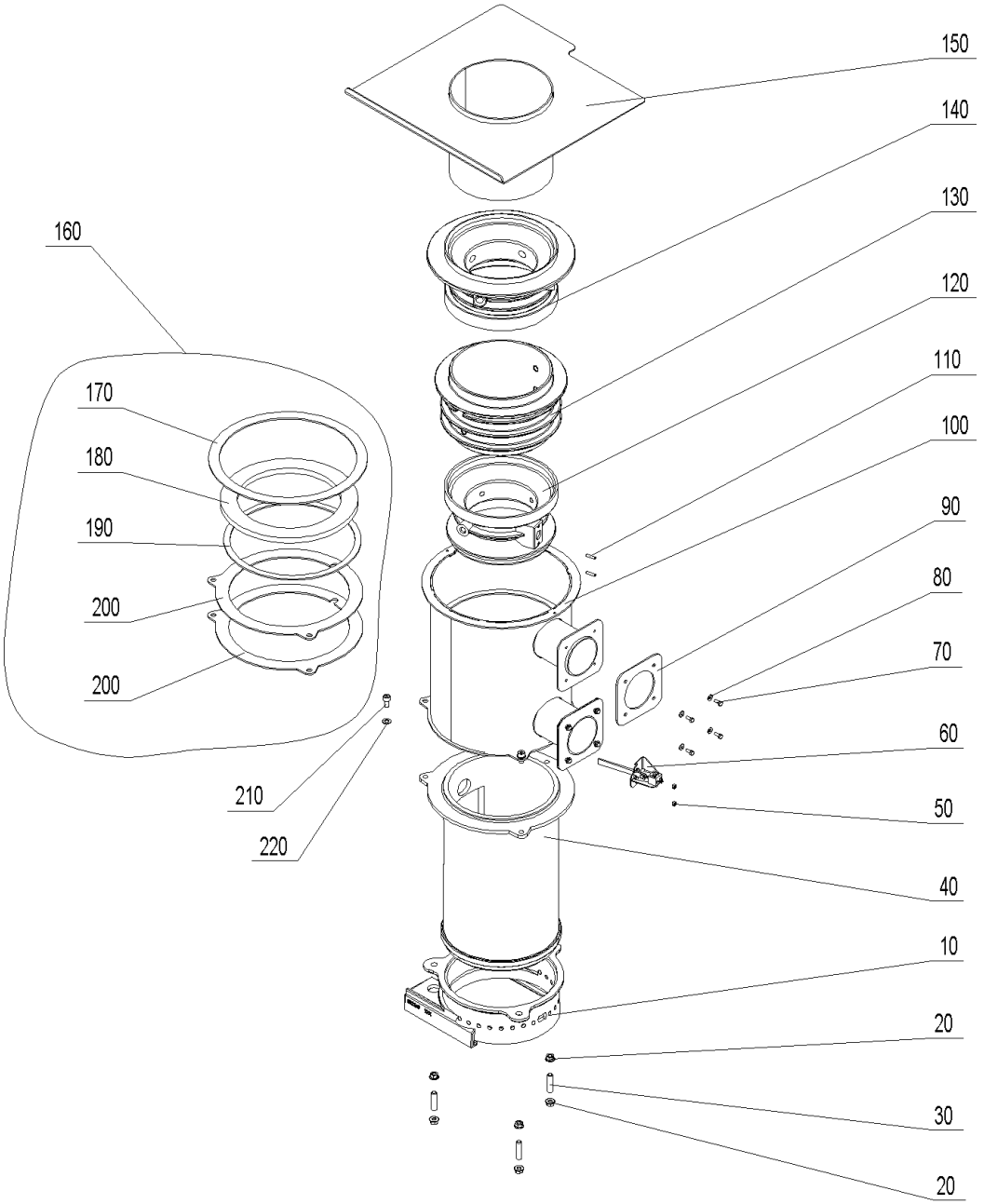

combustion chamber (A000152)

Item no.	Article no.	Description	Quantity	Unit
90	052088	de: Brennerdichtung rechts PW24-60	2.00	pcs
100	052079	de: Brenner kpl. geschw. PW40-60	1.00	pcs
200	053647	de: Dichtung Brennerfl. PW40-60	1.00	pcs
180	052090	de: Dichtung Sek/Ter PW40-60	1.00	pcs
190	052089	de: Dichtung Sekundärluftdüse PW40-60	1.00	pcs
160	054375	de: Dichtungsset zu PW 40-60	1.00	pcs
170	052091	de: Dichtung Tertiärluft PW40-60	1.00	pcs
110	054158	de: Gewindestifte mit ISK und Kegelkuppe ISO4026/DIN 913 M 5X 20 Edelstahl A2	2.00	pcs
30	052061	de: Gewindestift M10x40 A2	3.00	pcs
10	052866	de: Konus D270 PW40-60	1.00	pcs
130	052868	de: Sekundärluftdüse ob. PW40/49	1.00	pcs
120	052869	de: Sekundärluftdüse un. PW40/49	1.00	pcs
60	053336	de: Sekundärluftzündung kpl. mont. PW24-60	1.00	pcs
140	052870	de: Tertiärluftdüse PW40/49	1.00	pcs
40	053598	de: Vergaserrohr 270 PW40-60	1.00	pcs
150	052086	de: Vergaserrohr oben kpl. PW 40-60	1.00	pcs
210	053834	de: Zylinderschraube m. Innensechskant M8 x 20 - A4	6.00	pcs
80	018309	Disc 5 DIN134	8.00	pcs
220	024779	Disc 8 ISO 7089	6.00	pcs
50	017035	Hexagon nut M5 DIN 934	2.00	pcs
20	016567	Hexagon nut M10 with flange and gearing (not illustrated)	6.00	pcs
70	017020	Hexagon screw Niro DIN 933 - M5x12 - A2 for HMX, FireWIN, VarioWIN	8.00	pcs

Control panel (A000160)

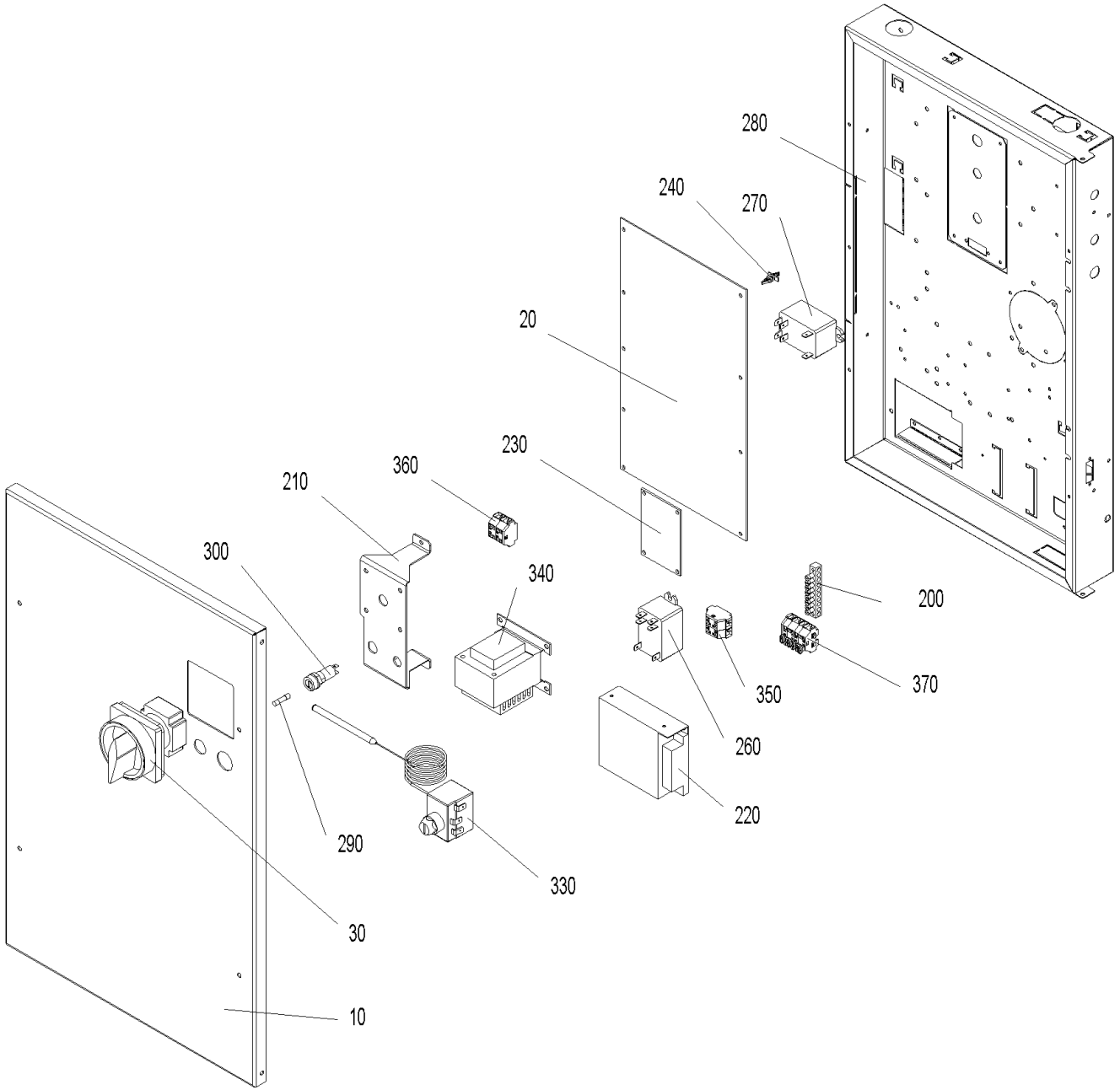

Control panel (A000160)

Item no.	Article no.	Description	Quantity	Unit
290	003228	6.3A fuse (not illustrated)	1.00	pcs
380	018140	Cylinder screw 4.2x13 DIN7981ST (not illustrated)	1.00	pcs
10	053289	de: Deckel Schaltfeld PW24-60	1.00	pcs
20	012007	de: Feuerungsautomat PW	1.00	pcs
30	012010	de: Hauptschalter 2polig 16 A PW	1.00	pcs
145	053326	de: Ka. Primärzündung PW	1.00	pcs
40	053331	de: Kabel 230V Versorgung FU`s + FA2 PW	1.00	pcs
50	053328	de: Kabel Ascheaustragung PW	1.00	pcs
60	054299	de: Kabel Ascherostschieber PW	1.00	pcs
70	054300	de: Kabel Glutbettschieber PW	1.00	pcs
80	053330	de: Kabel Heizflächenreinigung PW	1.00	pcs
90	053318	de: Kabel LON Elektrikeranschluß PW	1.00	pcs
100	053332	de: Kabel LON FA2 + STB PW	1.00	pcs
130	053385	de: Kabel ModBUS Steigschnecke PW	1.00	pcs
110	053335	de: Kabel Motor Ascheschieber PW	1.00	pcs
120	054306	de: Kabel Motor Glutbettschieber PW	1.00	pcs
140	053339	de: Kabel Netz und Heizungsnotschalter PW	1.00	pcs
150	053322	de: Kabel Saugzuggebläse PW	1.00	pcs
160	053323	de: Kabel Sekundärfluftklappe und Schalter Überfüllung PW	1.00	pcs
170	053324	de: Kabel Sekundärzündung PW	1.00	pcs
180	054016	de: Kabel Türschalter kpl. PW	1.00	pcs
190	053338	de: Kabel Versorgung ModBUS FU`s+FA2 PW	1.00	pcs

Control panel (A000160)

Item no.	Article no.	Description	Quantity	Unit
210	053984	de: Konsole Hauptschalter PW24-60	1.00	pcs
220	002053	de: Netzteil 12VDC 2,1A	1.00	pcs
230	012014	de: Platine - Relais PW	1.00	pcs
260	005075	de: Relais 16A AC 2 polig 12V DC Steuerung	1.00	pcs
300	003663	Fuse holder	1.00	pcs
250	007629	Immersion sensor PT 1000 (not illustrated)	1.00	pcs
310	502186	MES009M Immersion sensor	1.00	pcs
240	007609	PCB holder	1.00	pcs
270	005025	Power relay OMRON G7L-2A-BUB 200/240AC for PMX,BioWIN XL, BioWIN10-26,FireWIN,VarioWIN, BioWIN XL 35-60	1.00	pcs
200	009929	Terminal bar MS 8-pin 8x8mm for VarioWIN,FireWIN, BioWIN XL 35-60	1.00	pcs
320	007626	Thermocouple	1.00	pcs
330	005672	Thermostat LS1+100-6U	1.00	pcs
340	007096	Transformer for O2 sensor 18VA for LogWIN Premium 180-505	1.00	pcs
360	006833	Wago terminal block 261; 4-pin "12V GND"	1.00	pcs
350	006834	Wago terminal block 261; 4-pin "safety 1-4"	1.00	pcs
370	007656	Wago terminal block 261; 6-pin	1.00	pcs

Heating surface cleaning (A000156)

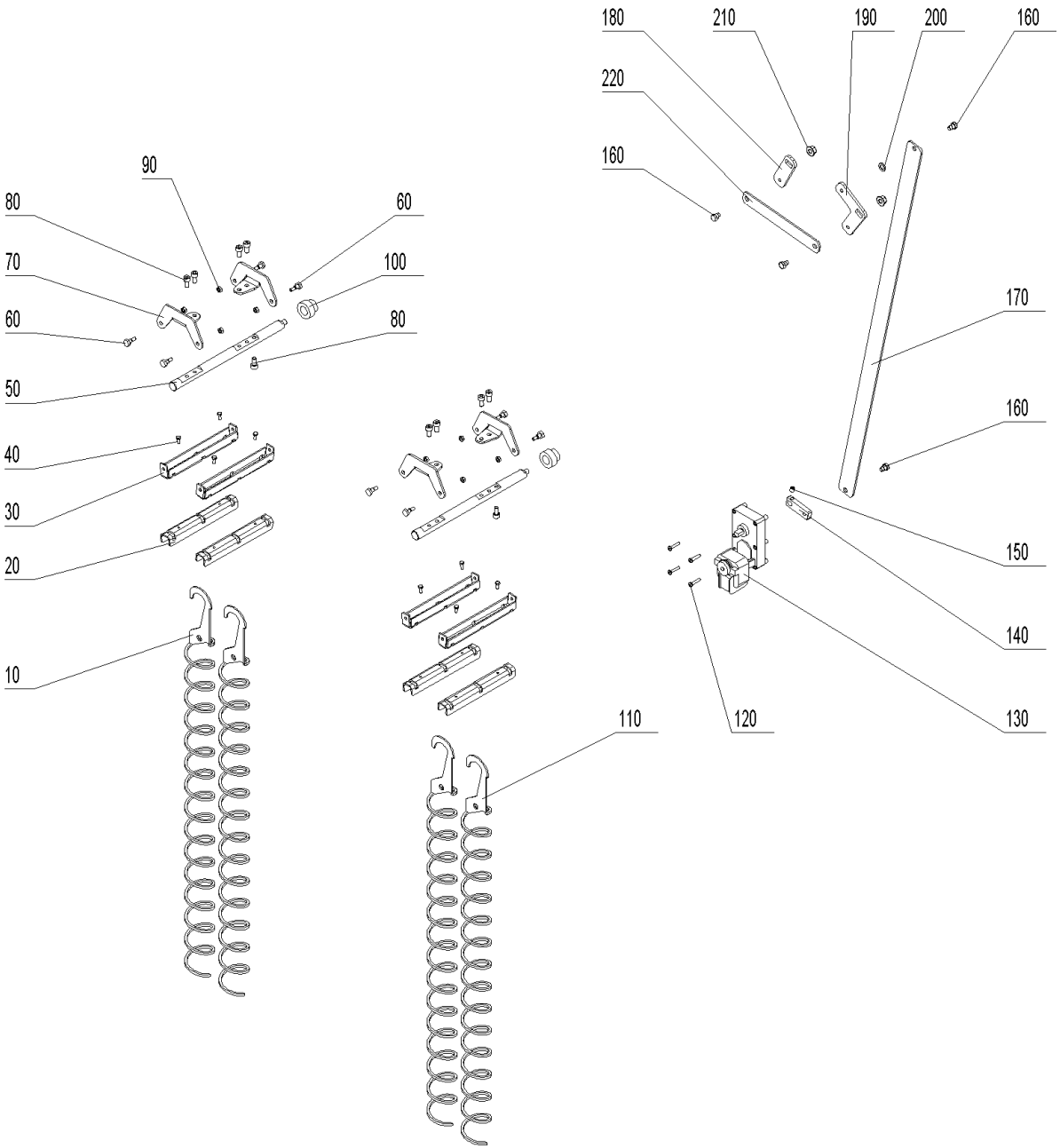

Heating surface cleaning (A000156)

Item no.	Article no.	Description	Quantity	Unit
20	047065	Bottom cleaning profile for BioWIN XL 35-60	4.00	pcs
160	012502	Collar screw	4.00	pcs
120	016837	Cylinder screw M5x25 ISO 7045	4.00	pcs
180	053281	de: Achsenhebel links HFR PW24-60	1.00	pcs
190	053280	de: Achsenhebel rechts HFR PW24-60	1.00	pcs
70	052738	de: Lagerarm für Heizflächenreinigung PW24-60	4.00	pcs
110	052768	de: Reinigungsschnecke links PW40-60	4.00	pcs
10	053981	de: Reinigungsschnecke rechts PW24-60	4.00	pcs
140	053282	de: Rüttelhebel Motor HFR PW24-60	1.00	pcs
200	018031	de: Scheibe ISO 7092 - 10 - blank	1.00	pcs
220	052781	de: Verbinder Rüttelachse HFR PW24-60	1.00	pcs
170	053284	de: Verbindung Heizflächenreinigung PW24-60	1.00	pcs
50	052737	de: Welle für Heizflächenreinigung PW24-60	2.00	pcs
80	053102	de: Zylinderschraube m. Innensechskant ISO 4762 - M 8 x 16 - A4 (DIN 912)	10.00	pcs
100	047416	Heating surface cleaning bearing for BioWIN XL 35-60	2.00	pcs
210	016567	Hexagon nut M10 with flange and gearing (not illustrated)	2.00	pcs
40	017020	Hexagon screw Niro DIN 933 - M5x12 - A2 for HMX, FireWIN, VarioWIN	8.00	pcs
130	044665	Motor	1.00	pcs
90	016596	Nut DIN 934 - M6 - A2 for VarioWIN, FireWIN, BioWIN10-26, BioWIN XL 35-60	8.00	pcs
60	006756	Screw M6 for heating surface cleaning for PMX,BioWIN 10-26,FireWIN, BioWIN XL 35-60, LogWIN Premium 180-505	8.00	pcs
150	033112	Setscrew M8x10 DIN916	1.00	pcs
30	047064	Top cleaning profile for BioWIN XL 35-60	4.00	pcs

Ignition (A000158)

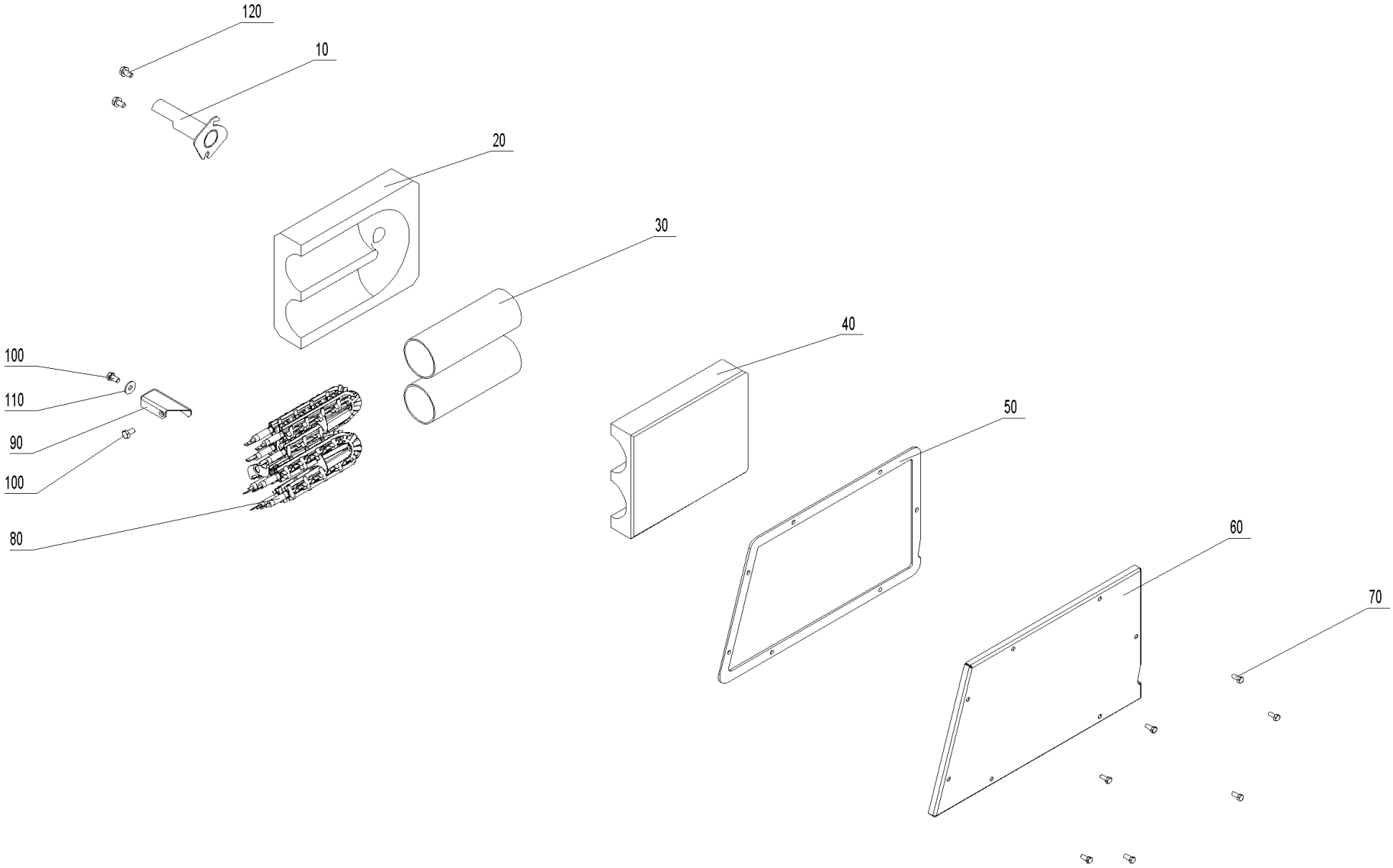

Ignition (A000158)

Item no.	Article no.	Description	Quantity	Unit
60	052717	de: Abdeckung Zündung PW24-60	1.00	pcs
90	052387	de: Anschlag Zündung PW24-60	1.00	pcs
50	052993	de: Dichtung Zündung PW24-60	1.00	pcs
20	052713	de: Isolierstein unten Zündung PW24-60	1.00	pcs
10	052716	de: Zündrohr kpl. PW24/30	1.00	pcs
10	052766	de: Zündrohr kpl. PW40-60	1.00	pcs
110	031753	Disc 6 ISO 7093	1.00	pcs
100	017051	Hexagon screw M6x12 DIN 933 (not illustrated)	2.00	pcs
120	031549	Hexagon screw M6x12 DIN 7500	2.00	pcs
70	017020	Hexagon screw Niro DIN 933 - M5x12 - A2 for HMX, FireWIN, VarioWIN	7.00	pcs
80	055201	Ignition element BioWIN10-26, FireWIN from lot 15, VarioWIN from lot 15 BioWIN XL, LWK	1.00	pcs
30	050489	Ignition tube LWP18-50, LWK	2.00	pcs
40	007484	Insulating stone top for automatic ignition LWP18-50, LWK	1.00	pcs

Air control PL (A000159)

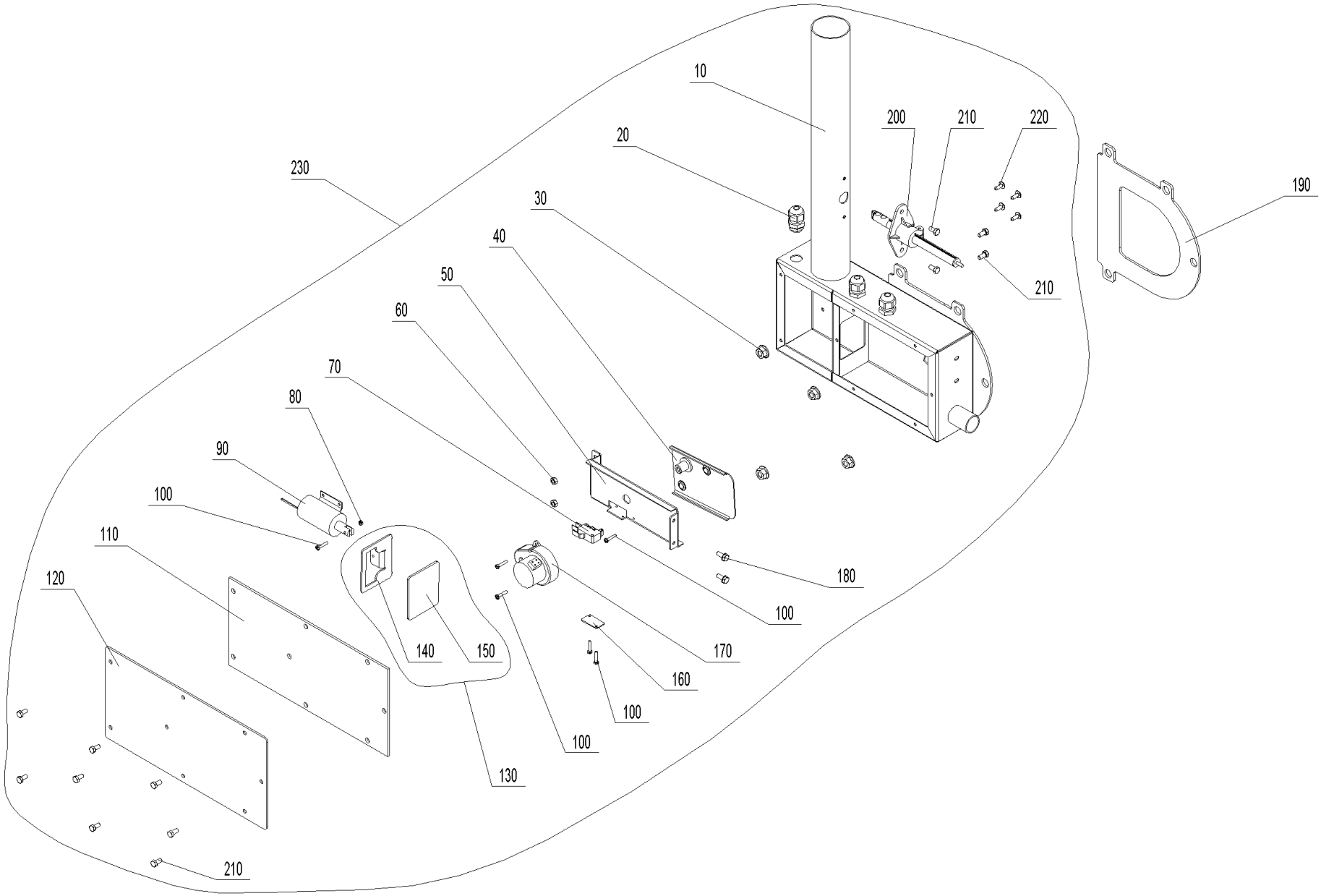

Air control PL (A000159)

Item no.	Article no.	Description	Quantity	Unit
70	009277	Air control microswitch	1.00	pcs
220	018139	Cylinder screw 4.2x13 DIN7981SP (not illustrated)	4.00	pcs
140	052885	de: Absperrpl. PW24-60	1.00	pcs
130	054578	de: Absperrplatte kpl. PW24-60	1.00	pcs
50	052884	de: Befestigungsblende PW24-60	1.00	pcs
120	052881	de: Deckel Luftschacht PW24-60	1.00	pcs
150	052886	de: Dichtung Absperrplatte PW24-60	1.00	pcs
110	052882	de: Dichtung Deckel Luftschacht PW24-60	1.00	pcs
190	052890	de: Dichtung Flansch Luftschacht PW24-60	1.00	pcs
40	053649	de: Luftklappe PW24-60	1.00	pcs
230	052893	de: Luftregelung kpl. PW24-60	1.00	pcs
10	052891	de: Luftschacht kpl. PW24-60	1.00	pcs
170	009579	de: Motor - Luftklappen PW24-60	1.00	pcs
160	051044	de: Platte Mikroschalter PW24-60	1.00	pcs
200	052878	de: Strömungsmessumformer PW24-60	1.00	pcs
100	016766	de: Zyl.-Schrauben M3x16 verz.m.KS. DIN 7985	6.00	pcs
90	052911	de: Zylindermagnet PW24-60	1.00	pcs
80	016551	Hexagon nut M3 DIN 934	1.00	pcs
60	017035	Hexagon nut M5 DIN 934	2.00	pcs
30	016553	Hexagon nut M8 with flange and gearing	4.00	pcs
180	031545	Hexagon screw M5x12 DIN 7500 (not ilustrated)	2.00	pcs
210	017020	Hexagon screw Niro DIN 933 - M5x12 - A2 for HMX, FireWIN, VarioWIN	12.00	pcs

Air control PL (A000159)

Item no.	Article no.	Description	Quantity	Unit
20	006340	Mount connections PG9	3.00	pcs

Air control SL/TL (A000161)

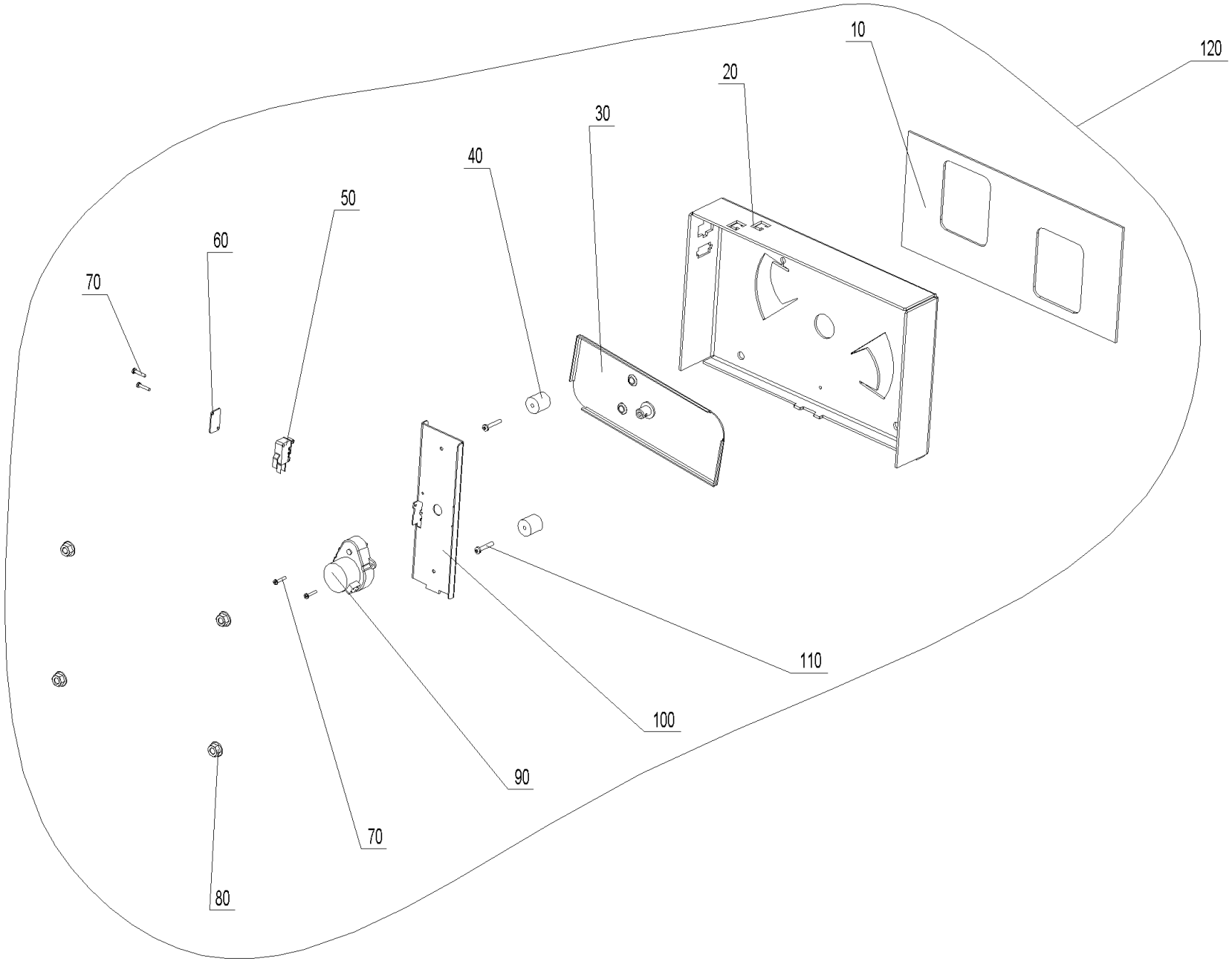

Air control SL/TL (A000161)

Item no.	Article no.	Description	Quantity	Unit
50	009277	Air control microswitch	1.00	pcs
40	053829	de: Abstandswelle PW 24-60	2.00	pcs
100	052899	de: Befestigungsblech Stellmotor PW24-60	1.00	pcs
10	052900	de: Dichtung Luftregelung S/T PW24-60	1.00	pcs
20	052897	de: Konsole Luftregelung PW24-60	1.00	pcs
30	053648	de: Luftklappe PW24-60	1.00	pcs
120	052896	de: Luftregelung kpl. PW24-60	1.00	pcs
90	009579	de: Motor - Luftklappen PW24-60	1.00	pcs
60	051044	de: Platte Mikroschalter PW24-60	1.00	pcs
70	016766	de: Zyl.-Schrauben M3x16 verz.m.KS. DIN 7985	4.00	pcs
110	016802	de: Zyl.-Schrauben M4x25 verz.m.KS DIN 7985	2.00	pcs
80	016553	Hexagon nut M8 with flange and gearing	4.00	pcs

Ash conveyor (A000154)

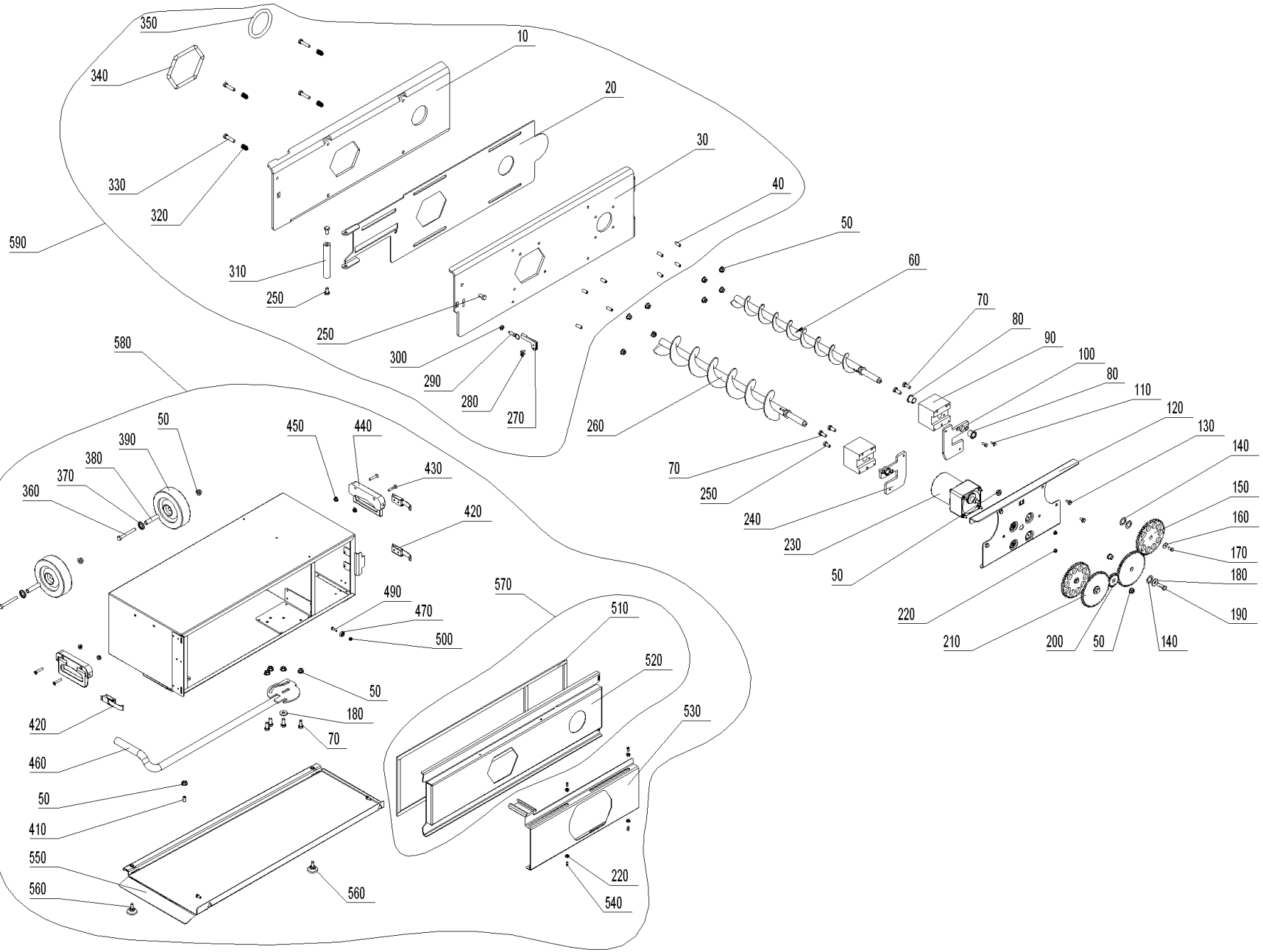

Ash conveyor (A000154)

Item no.	Article no.	Description	Quantity	Unit
90	044680	Ash removal flange, complete with bearing bushes for BioWIN 10-26 (Only BioWIN Exklusiv), BioWIN XL 35-60	2.00	pcs
230	050901	Auger motor SPG	1.00	pcs
280	018140	Cylinder screw 4.2x13 DIN7981ST (not illustrated)	2.00	pcs
370	054574	de: Achsenklemmring ohne Kappe 12mm FDST brüniert	2.00	pcs
270	053993	de: Arretierungslasche PW24-60	1.00	pcs
60	052193	de: Ascheaustragung Schnecke hinten kpl. PW24-60	1.00	pcs
260	052217	de: Ascheaustragung Schnecke vorne kpl. PW24-60	1.00	pcs
570	054576	de: Aschebox Deckel kpl. PW24-60	1.00	pcs
520	054493	de: Aschebox Deckel PW24-60	1.00	pcs
30	053990	de: Ascheboxflansch PW24-60	1.00	pcs
590	053994	de: Ascheboxflansch PW24-60	1.00	pcs
460	054471	de: Aschebox Griff PW24-60	1.00	pcs
380	054490	de: Aschebox Lagerrohr PW24-60	2.00	pcs
550	054485	de: Aschebox Sockel PW24-60	1.00	pcs
530	054494	de: Aschebox Verschluß PW24-60	1.00	pcs
10	053992	de: Dichtblech Ascheboxflansch PW24-60	1.00	pcs
350	053998	de: Dichtung AAT hinten PW24-60	1.00	pcs
340	052375	de: Dichtung AAT vorne PW24-60	1.00	pcs
510	054571	de: Dichtung Aschelade PW24-60	1.00	pcs
320	053997	de: Druckfeder	4.00	pcs
240	051169	de: Flanschplatte links AAT PW24-60	1.00	pcs
100	052371	de: Flanschplatte rechts AAT PW24-60	1.00	pcs

Ash conveyor (A000154)

Item no.	Article no.	Description	Quantity	Unit
40	033536	de: Gewindestift M8 x 20 VZ, DIN 913	8.00	pcs
440	054570	de: Griff	2.00	pcs
310	053995	de: Griff Aschelade PW24-60	1.00	pcs
120	052197	de: Konsole AAT PW24-60	1.00	pcs
580	052700	de: PW9 Aschebox zu Hackgut-Vergaser	1.00	pcs
470	053906	de: Rillenkugellager	2.00	pcs
140	047545	de: Scheibe D25/16,2x1,5 verz.	6.00	pcs
20	053991	de: Schieber Ascheboxflansch PW24-60	1.00	pcs
330	031550	de: Sechskantschraube DIN 931 - M8x35 - 8.8 - verzinkt	4.00	pcs
490	015025	de: Sechskantschraube DIN 933 - M5x16 - 8.8 - verzinkt	2.00	pcs
360	033093	de: Sechskantschraube DIN 933 - M8x65 - 8.8	2.00	pcs
430	054573	de: Senkschraube M6x30 DIN965	4.00	pcs
210	052195	de: Stirnrad Getriebe PW24-60	2.00	pcs
200	052372	de: Stirnrad Motor PW24-60	1.00	pcs
150	052196	de: Stirnrad Schnecke PW24-60	2.00	pcs
540	033092	de: Zapfenschrauben M5X5	4.00	pcs
160	031753	Disc 6 ISO 7093	2.00	pcs
180	031755	Disc 8 ISO 7093	3.00	pcs
80	012508	Friction bearing with connector	4.00	pcs
220	016565	Hexagon nut M5 with flange and gearing (not illustrated)	8.00	pcs
300	016659	Hexagon nut M8 DIN434	1.00	pcs
50	016553	Hexagon nut M8 with flange and gearing	17.00	pcs

Ash conveyor (A000154)

Item no.	Article no.	Description	Quantity	Unit
450	016566	Hexagon nut with flange and gearing M6	4.00	pcs
70	017873	Hexagon screw DIN 933 - M8x20 - A2 for VarioWIN, FireWIN	8.00	pcs
110	031545	Hexagon screw M5x12 DIN 7500 (not ilustrated)	4.00	pcs
170	017051	Hexagon screw M6x12 DIN 933 (not illustrated)	2.00	pcs
130	031549	Hexagon screw M6x12 DIN 7500	4.00	pcs
250	017872	Hexagon screw M8x16, DIN 933 for BioWIN XL 35-60	4.00	pcs
190	017191	Hexagon screw M8x25 DIN 933	2.00	pcs
560	009991	Leg - JTLO 38 - M8x16 for VarioWIN	2.00	pcs
290	007191	Locking bolt with pull ring GN 717-5-M8-A-ST	1.00	pcs
500	016727	Lock nut M5	2.00	pcs
410	051836	Spring-loaded pressure piece M8	0.00	pcs
420	009546	Spring lock	3.00	pcs
390	006888	Wheel AG 125-12	2.00	pcs

Ash removal (A000150)

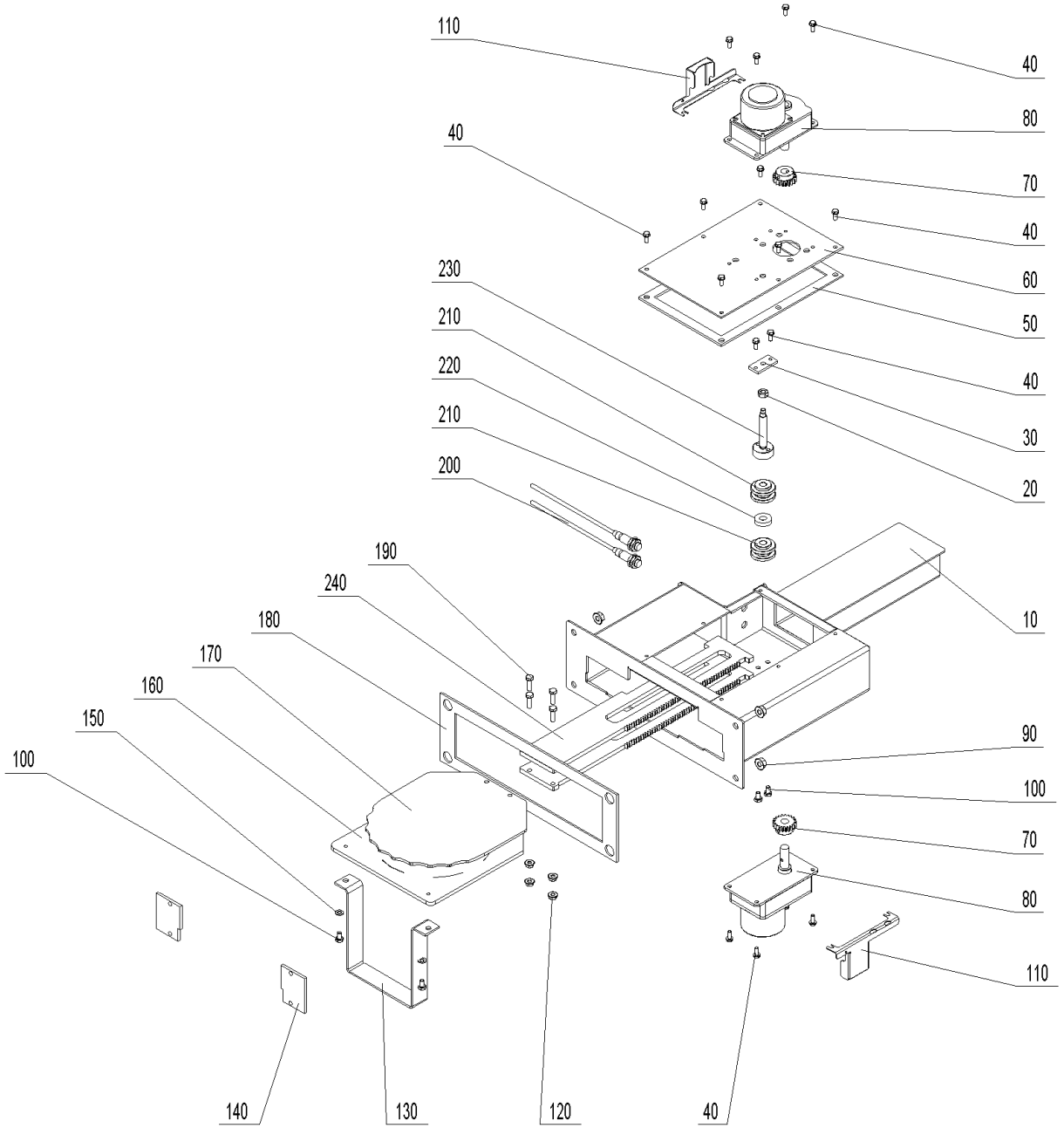

Ash removal (A000150)

Item no.	Article no.	Description	Quantity	Unit
210	007125	Bearing for vibrating drive	4.00	pcs
160	052163	de: Ascheschieber PW40-60	1.00	pcs
130	052907	de: Ascheverdrängblech PW24-60	1.00	pcs
60	052148	de: Deckel oben Entaschung PW24-60	1.00	pcs
50	052151	de: Dichtung Deckel Entaschung PW24-60	1.00	pcs
180	052152	de: Dichtung Fl. Entaschung PW24-60	1.00	pcs
220	052149	de: Distanzscheibe PW24-60	1.00	pcs
140	052904	de: Führungsplatte Entaschung PW24/30	0.00	pcs
170	052160	de: Glutbettschieber für PW40-60	1.00	pcs
110	054167	de: Kabelabdeckung Motor PW24-60	2.00	pcs
10	052140	de: Konsole Entaschung PW24-60	1.00	pcs
30	052150	de: Lagerungsblech PW24-60	1.00	pcs
80	053641	de: Motor - Entaschung zu PuroWIN	1.00	pcs
150	031713	de: Scheibe ISO 7089 - 6 - A2	2.00	pcs
70	052154	de: Stirnrad PW24-60	2.00	pcs
230	052153	de: Welle Lagerung PW24-60	1.00	pcs
240	053651	de: Zahnstange ob. PW40-60	2.00	pcs
90	016553	Hexagon nut M8 with flange and gearing	4.00	pcs
120	016566	Hexagon nut with flange and gearing M6	4.00	pcs
100	015026	Hexagon screw DIN 933 - M6x10 - 8.8 - galvanised for VarioWIN, FireWIN	6.00	pcs
40	031545	Hexagon screw M5x12 DIN 7500 (not ilustrated)	20.00	pcs
190	015471	Hexagon screw M6x20 DIN 933	4.00	pcs

Ash removal (A000150)

Item no.	Article no.	Description	Quantity	Unit
20	015992	Nut M8 DIN 934 V2 - LogWIN Klassik pellet ready	1.00	pcs
200	006832	Proximity switch M12, inductive	2.00	pcs

Boiler (A000147)

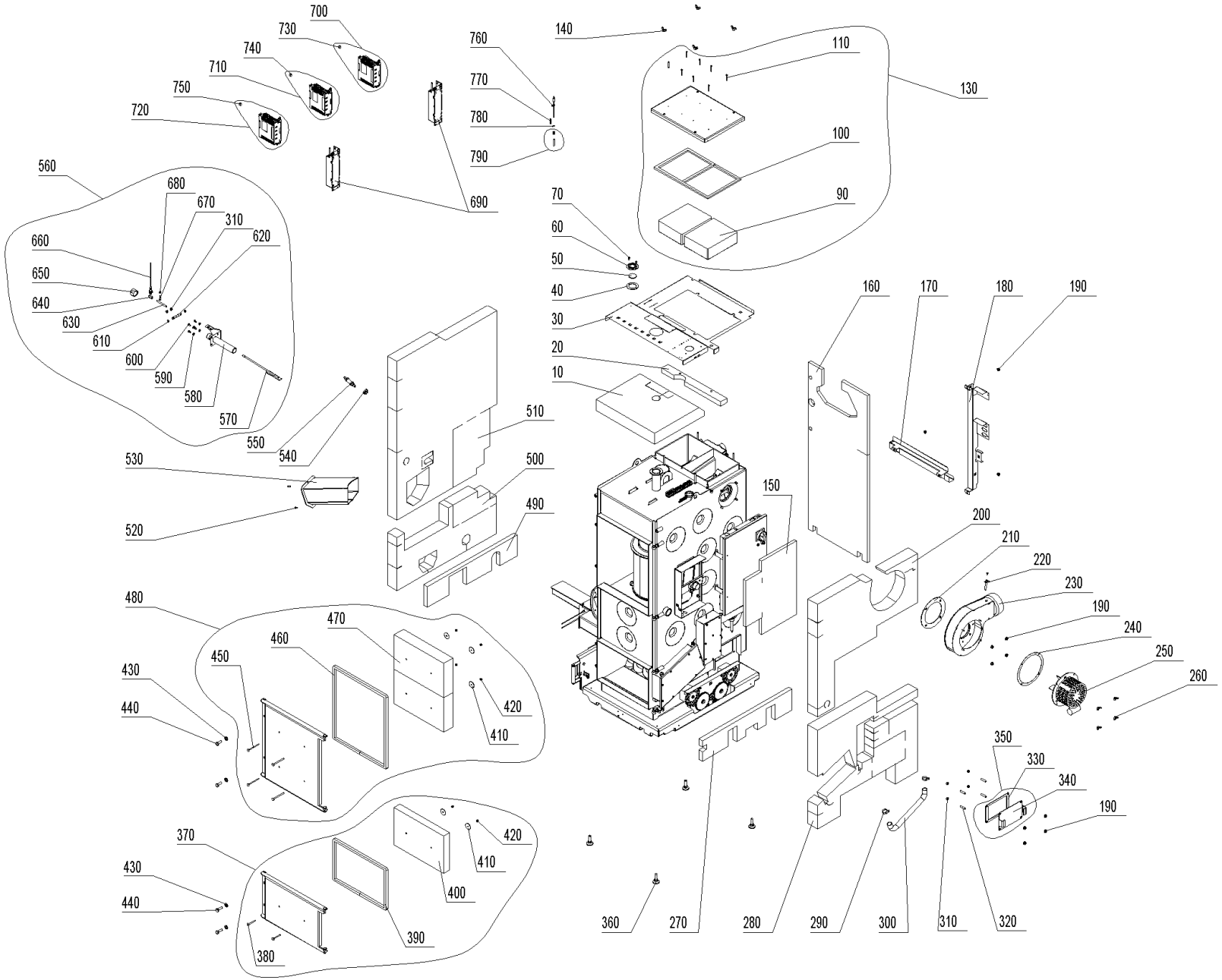

Boiler (A000147)

Item no.	Article no.	Description	Quantity	Unit
210	050825	Blower seal LWK	1.00	pcs
420	016192	Cap nut	6.00	pcs
350	047991	Coasting surface bottom cover for BioWIN XL 35-60	1.00	pcs
770	050647	Combustion chamber sensor spring	1.00	pcs
110	016719	Cylinder drilling screw 4.2 x 38 DIN7504	8.00	pcs
340	047188	de: Abdeckblech BW60, PW	1.00	pcs
250	051039	de: Abgasgebläse kpl. LWK, PW	1.00	pcs
370	054581	de: Aschetür mont. PW24-60	1.00	pcs
390	052378	de: Dichtschnur Ascheür PW24-60	1.00	pcs
460	052381	de: Dichtschnur Heiztür PW24-60	1.00	pcs
330	047190	de: Dichtung Abdeckblende 60BW, PW	1.00	pcs
240	054468	de: Dichtung Gebläsemotor PW24-60	1.00	pcs
100	051868	de: Dichtung Reinigungsdeckel PW24-49	1.00	pcs
40	051712	de: Dichtung Schauloch PW24-60	1.00	pcs
730	054197	de: Eprom auf STOK program. zu FU PuroWIN Zuführung direkt / pneumatisch	1.00	pcs
750	054199	de: Eprom auf TANK program. zu FU PuroWIN Zuführung pneumatisch	1.00	pcs
740	054196	de: Eprom RAS program. zu FU PuroWIN Zuführung direkt	1.00	pcs
710	054847	de: ET-SET: FU mit Eprom RAS zu Zuführung direkt PuroWIN	1.00	pcs
700	054848	de: ET-SET: FU mit Eprom STOK zu Zuführung direkt/pneumatisch PuroWIN	1.00	pcs
720	054849	de: ET-SET: FU mit Eprom TANK zu Zuführung pneumatisch PuroWIN	1.00	pcs
690	054185	de: Filter zu FU, 0,75kW, 1-Phase, PuroWIN	2.00	pcs
140	019414	de: Flügelmutter ähnl. DIN 315 - M8 - St - verzinkt	4.00	pcs

Boiler (A000147)

Item no.	Article no.	Description	Quantity	Unit
570	052176	de: Fühler kpl. PW24/30	1.00	pcs
570	054467	de: Fühler kpl. PW40-60	1.00	pcs
230	053011	de: Gebläsekasten lackiert LWK, PW	1.00	pcs
630	017032	de: Gewindebolzen M8x80 verzinkt	1.00	pcs
50	000307	de: Glasscheibe BOROFLOAT Ø 45/4 mm	1.00	pcs
480	054580	de: Heiztür mont. PW24-60	1.00	pcs
290	029424	de: IDEAL-Schlauchklemmen 22-32mm	2.00	pcs
30	052976	de: Isolierabdeckung oben PW24-60	1.00	pcs
400	052380	de: Isolierstein Aschetür PW24-60	1.00	pcs
470	052384	de: Isolierstein Heiztür PW24-60	2.00	pcs
90	051862	de: Isolierstein NHF links PW24-60	2.00	pcs
160	052732	de: Isolierung hinten oben PW24-60	1.00	pcs
490	053293	de: Isolierung links innen PW24-60	1.00	pcs
510	052774	de: Isolierung links PW24-60	1.00	pcs
500	053295	de: Isolierung links unten PW24-60	1.00	pcs
20	053810	de: Isolierung oben hinten PW24-60	1.00	pcs
10	052977	de: Isolierung oben PW24-60	1.00	pcs
270	053292	de: Isolierung rechts innen PW24-60	1.00	pcs
200	052189	de: Isolierung rechts PW24-60	1.00	pcs
280	053294	de: Isolierung rechts unten PW24-60	1.00	pcs
150	052736	de: Isolierung Schaltfeld PW24-60	1.00	pcs
170	052996	de: Kabelschacht unten PW24-60	1.00	pcs

Boiler (A000147)

Item no.	Article no.	Description	Quantity	Unit
180	052704	de: Kableschacht senkrecht PW24-60	1.00	pcs
650	008850	de: Kappe Nr. 300, 1" schwarz	1.00	pcs
620	052099	de: Level Controll Achse PW24-60	1.00	pcs
580	052734	de: Level Controll Rohr kpl. PW24/30	1.00	pcs
580	052735	de: Level Controll Rohr kpl. PW40-60	1.00	pcs
560	054176	de: Level Control montiert PW24/30	1.00	pcs
560	054175	de: Level Control montiert PW40-60	1.00	pcs
310	031154	de: Mutter M8 - A4	4.00	pcs
800	009185	de: Netzfilter FN2020-10-06 zu PuroWIN	1.00	pcs
130	054579	de: Reinigungsdeckel montiert PW24-60	1.00	pcs
60	087300	de: Rosette für Schauglas	1.00	pcs
300	052989	de: Schlauch Airmetall PU1 PW24-60	1.00	pcs
530	053114	de: Schneckenrohr kpl. PW24/30	1.00	pcs
530	052731	de: Schneckenrohr kpl. PW40-60	1.00	pcs
440	017865	de: Sechskantschraube M12x35 - 8.8	4.00	pcs
610	052174	de: Sicherungsring 12 X 1	2.00	pcs
780	031274	Eyelet M6	1.00	pcs
360	009994	Foot M12X40 JTB38 for HMX, EasyWIN Klassik/Premium 180, LogWIN Premium 180-505	4.00	pcs
680	016594	Hexagon nut M6 DIN 934	1.00	pcs
190	016553	Hexagon nut M8 with flange and gearing	11.00	pcs
670	015041	Hexagon screw DIN 933 - M6x25 - 8.8 - galvanised for VarioWIN, FireWIN	1.00	pcs
70	031545	Hexagon screw M5x12 DIN 7500 (not ilustrated)	2.00	pcs

Boiler (A000147)

Item no.	Article no.	Description	Quantity	Unit
600	017051	Hexagon screw M6x12 DIN 933 (not illustrated)	4.00	pcs
550	051646	Lambda sensor	1.00	pcs
540	007094	Lambda sensor insulating ring for LogWIN Premium 180-505	1.00	pcs
520	020095	M5x16 TT raised countersunk head screw, DIN 7500ME for VestoWIN Premium 200-202, VestoWIN Klassik 170-220	2.00	pcs
640	048554	M8 long nut	1.00	pcs
790	051069	Protective tube for combustion chamber sensor, complete	1.00	pcs
220	041498	Protective tube for exhaust gas sensor	1.00	pcs
660	006832	Proximity switch M12, inductive	1.00	pcs
380	016186	Round-head screw M6x60	2.00	pcs
450	016190	Round-head screw M6x90	4.00	pcs
320	016163	Setscrew DIN913 - M8 x 40-A2 for BioWIN 10-26	4.00	pcs
760	007626	Thermocouple	1.00	pcs
430	017183	U-Washer DIN 125B - M12 - galvanised for VarioWIN, FireWIN, BioWIN XL 35-60	4.00	pcs
590	020540	U-Washer DIN 134 - M6 - galvanised for VarioWIN, FireWIN	4.00	pcs
410	016191	Washer M6 4x40x1,5	6.00	pcs
260	019410	Wing nut M6	4.00	pcs

Cladding (A000148)

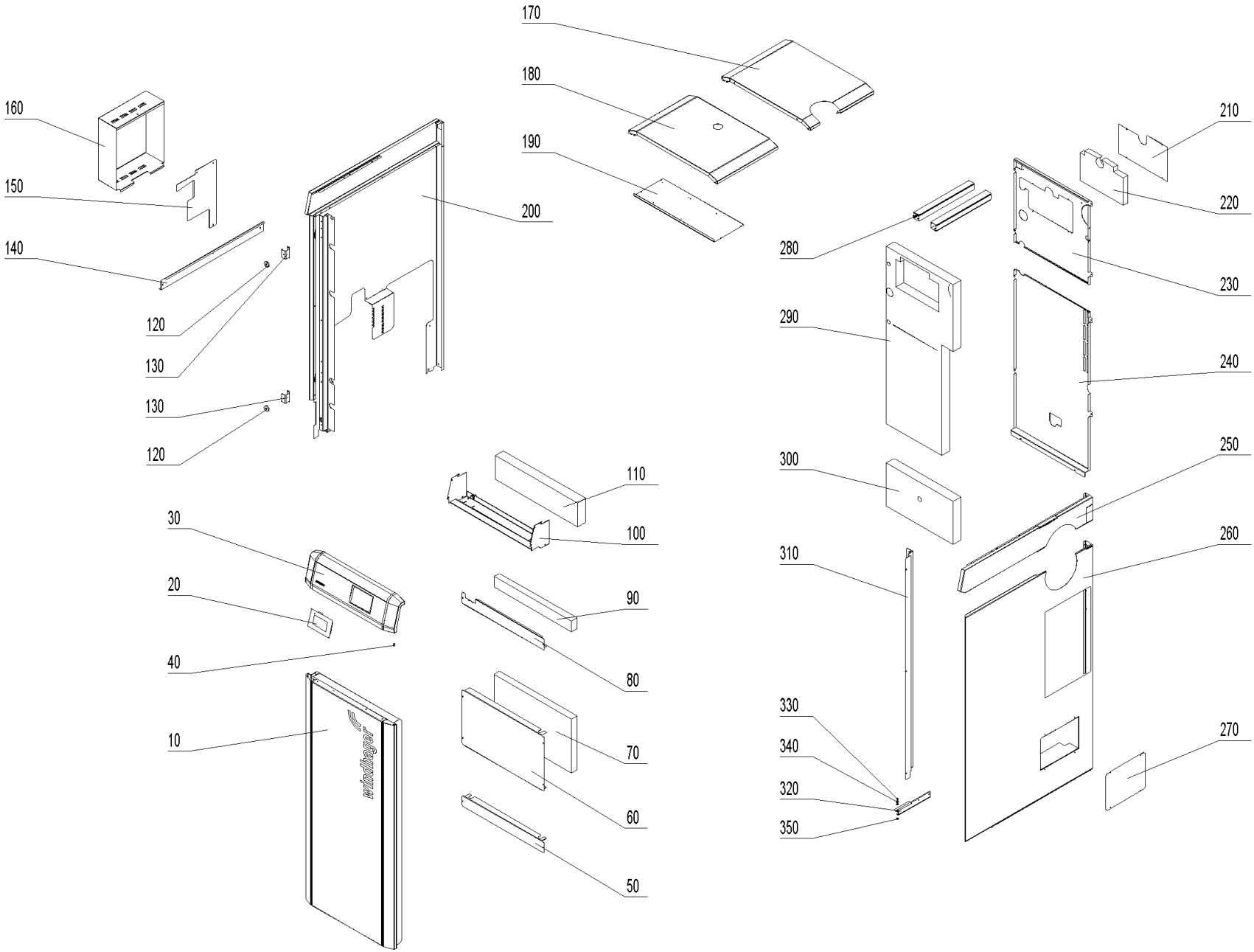

Cladding (A000148)

Item no.	Article no.	Description	Quantity	Unit
160	053812	de: Abdeckung Steckerkonsole PW24-60	1.00	pcs
30	054195	de: Bedienfeld PW	1.00	pcs
100	054163	de: Befestigungsblech Verkleidung PW24-60	1.00	pcs
130	053753	de: Haltebügel Magnet LWPT 18-36	2.00	pcs
190	053813	de: Isolierabdeckung Verbraucherr. PW24-60	1.00	pcs
110	053809	de: Isolierung Bedienfeld PW24-60	1.00	pcs
300	052778	de: Isolierung HFR Gestänge PW24-60	1.00	pcs
220	052776	de: Isolierung HFR oben PW24-60	1.00	pcs
290	052775	de: Isolierung hinten PW24-60	1.00	pcs
70	053297	de: Isolierung vorne mitte PW24-60	1.00	pcs
90	053296	de: Isolierung vorne oben PW24-60	1.00	pcs
120	001761	de: Magnet Ø31 gummiummantelt	2.00	pcs
200	054376	de: Seitenwand links PW24-60	1.00	pcs
150	054162	de: Seitenwand links unten PW24-60	1.00	pcs
270	053814	de: Verkleidung Abdeckung Reinigungsdeckel PW24-60	1.00	pcs
310	052982	de: Verkleidung Abdeckung Seitenwand rechts PW24-60	1.00	pcs
60	052983	de: Verkleidung Abdeckung vorne mitte PW24-60	1.00	pcs
80	052985	de: Verkleidung Abdeckung vorne oben PW24-60	1.00	pcs
50	052984	de: Verkleidung Abdeckung vorne unten PW24-60	1.00	pcs
210	052777	de: Verkleidung Deckel HFR oben PW24-60	1.00	pcs
170	053819	de: Verkleidung Deckel hinten PW24-60	1.00	pcs
180	053818	de: Verkleidung Deckel vorne PW24-60	1.00	pcs

Cladding (A000148)

Item no.	Article no.	Description	Quantity	Unit
230	052787	de: Verkleidung Rückwand oben PW24-60	1.00	pcs
240	051716	de: Verkleidung Rückwand unten PW24-60	1.00	pcs
320	054165	de: Verkleidung Schiene links PW24-60	1.00	pcs
140	054165	de: Verkleidung Schiene links PW24-60	1.00	pcs
250	053822	de: Verkleidung Seitenwand rechts oben PW24-60	1.00	pcs
260	053815	de: Verkleidung Seitenwand rechts PW24-60	1.00	pcs
10	054575	de: Verkleidung Tür kpl. PW24-60	1.00	pcs
280	050978	de: Wand und Deckenkanal BW2, PW	2.00	m
330	033092	de: Zapfenschrauben M5X5	1.00	pcs
340	018309	Disc 5 DIN134	2.00	pcs
40	015507	Dog point screw	1.00	pcs
350	016586	Hexagon nut M5 DIN 934	1.00	pcs
20	001009	INF8 MES INFINITY InfoWIN Touch	1.00	pcs

combustion chamber (A000152)

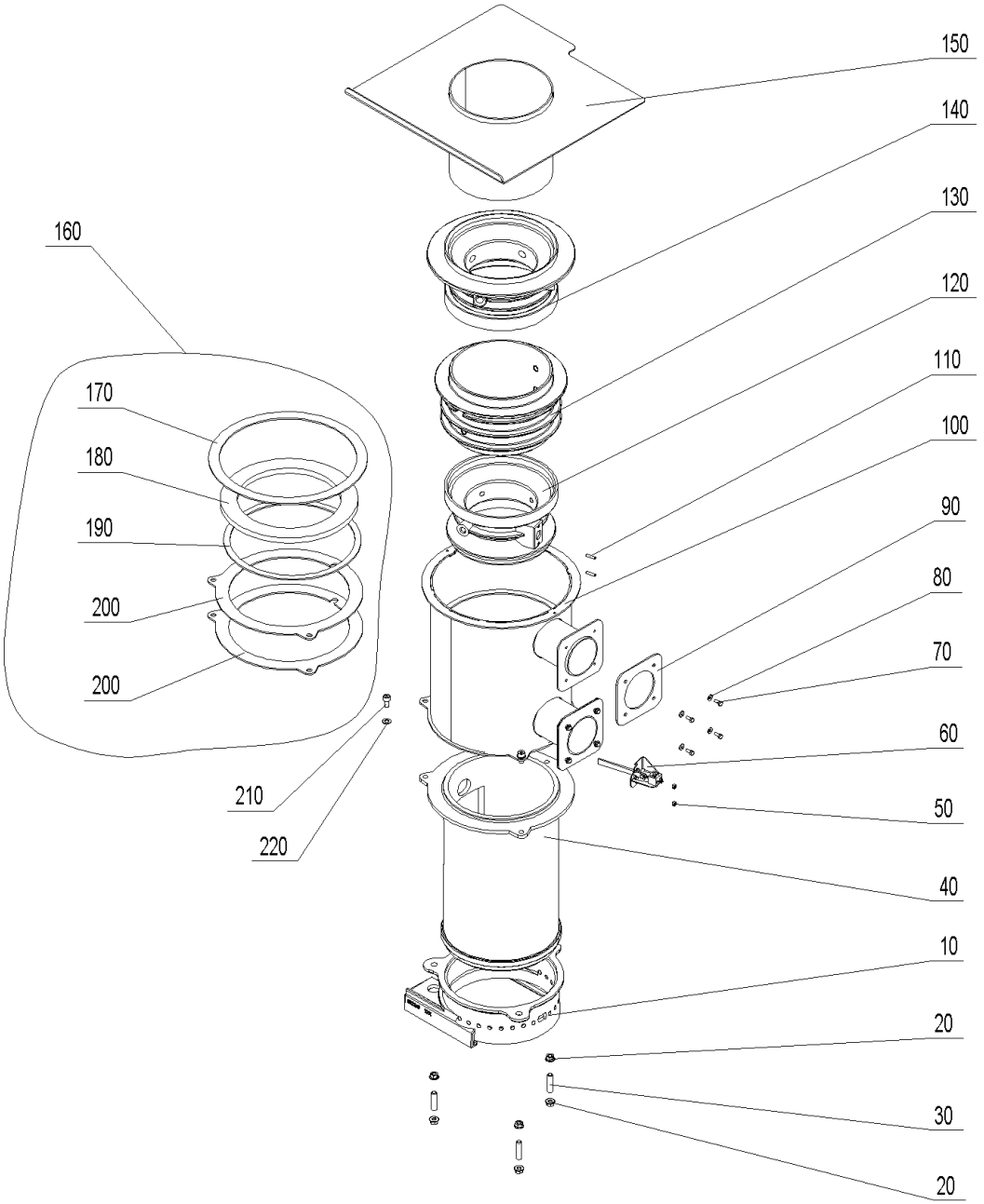

combustion chamber (A000152)

Item no.	Article no.	Description	Quantity	Unit
90	052088	de: Brennerdichtung rechts PW24-60	2.00	pcs
100	052079	de: Brenner kpl. geschw. PW40-60	1.00	pcs
200	053647	de: Dichtung Brennerfl. PW40-60	1.00	pcs
180	052090	de: Dichtung Sek/Ter PW40-60	1.00	pcs
190	052089	de: Dichtung Sekundärluftdüse PW40-60	1.00	pcs
160	054375	de: Dichtungsset zu PW 40-60	1.00	pcs
170	052091	de: Dichtung Tertiärluft PW40-60	1.00	pcs
110	054158	de: Gewindestifte mit ISK und Kegelkuppe ISO4026/DIN 913 M 5X 20 Edelstahl A2	2.00	pcs
30	052061	de: Gewindestift M10x40 A2	3.00	pcs
10	052866	de: Konus D270 PW40-60	1.00	pcs
130	052868	de: Sekundärluftdüse ob. PW40/49	1.00	pcs
120	052869	de: Sekundärluftdüse un. PW40/49	1.00	pcs
60	053336	de: Sekundärluftzündung kpl. mont. PW24-60	1.00	pcs
140	052870	de: Tertiärluftdüse PW40/49	1.00	pcs
40	053598	de: Vergaserrohr 270 PW40-60	1.00	pcs
150	052086	de: Vergaserrohr oben kpl. PW 40-60	1.00	pcs
210	053834	de: Zylinderschraube m. Innensechskant M8 x 20 - A4	6.00	pcs
80	018309	Disc 5 DIN134	8.00	pcs
220	024779	Disc 8 ISO 7089	6.00	pcs
50	017035	Hexagon nut M5 DIN 934	2.00	pcs
20	016567	Hexagon nut M10 with flange and gearing (not illustrated)	6.00	pcs
70	017020	Hexagon screw Niro DIN 933 - M5x12 - A2 for HMX, FireWIN, VarioWIN	8.00	pcs

Control panel (A000160)

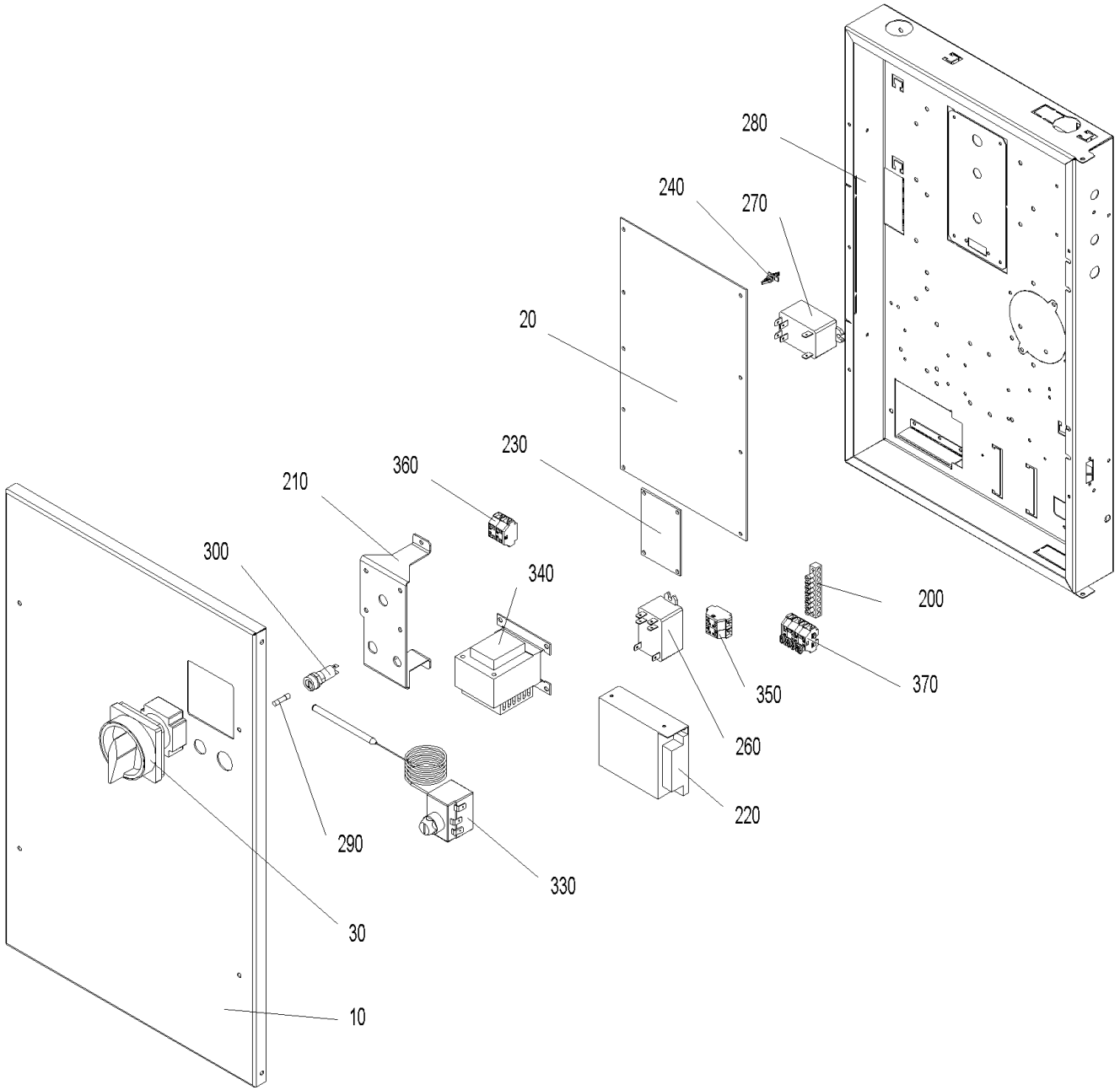

Control panel (A000160)

Item no.	Article no.	Description	Quantity	Unit
290	003228	6.3A fuse (not illustrated)	1.00	pcs
380	018140	Cylinder screw 4.2x13 DIN7981ST (not illustrated)	1.00	pcs
10	053289	de: Deckel Schaltfeld PW24-60	1.00	pcs
20	012007	de: Feuerungsautomat PW	1.00	pcs
30	012010	de: Hauptschalter 2polig 16 A PW	1.00	pcs
145	053326	de: Ka. Primärzündung PW	1.00	pcs
40	053331	de: Kabel 230V Versorgung FU`s + FA2 PW	1.00	pcs
50	053328	de: Kabel Ascheaustragung PW	1.00	pcs
60	054299	de: Kabel Ascherostschieber PW	1.00	pcs
70	054300	de: Kabel Glutbettschieber PW	1.00	pcs
80	053330	de: Kabel Heizflächenreinigung PW	1.00	pcs
90	053318	de: Kabel LON Elektrikeranschluß PW	1.00	pcs
100	053332	de: Kabel LON FA2 + STB PW	1.00	pcs
130	053385	de: Kabel ModBUS Steigschnecke PW	1.00	pcs
110	053335	de: Kabel Motor Ascheschieber PW	1.00	pcs
120	054306	de: Kabel Motor Glutbettschieber PW	1.00	pcs
140	053339	de: Kabel Netz und Heizungsnotschalter PW	1.00	pcs
150	053322	de: Kabel Saugzuggebläse PW	1.00	pcs
160	053323	de: Kabel Sekundärfluftklappe und Schalter Überfüllung PW	1.00	pcs
170	053324	de: Kabel Sekundärzündung PW	1.00	pcs
180	054016	de: Kabel Türschalter kpl. PW	1.00	pcs
190	053338	de: Kabel Versorgung ModBUS FU`s+FA2 PW	1.00	pcs

Control panel (A000160)

Item no.	Article no.	Description	Quantity	Unit
210	053984	de: Konsole Hauptschalter PW24-60	1.00	pcs
220	002053	de: Netzteil 12VDC 2,1A	1.00	pcs
230	012014	de: Platine - Relais PW	1.00	pcs
260	005075	de: Relais 16A AC 2 polig 12V DC Steuerung	1.00	pcs
300	003663	Fuse holder	1.00	pcs
250	007629	Immersion sensor PT 1000 (not illustrated)	1.00	pcs
310	502186	MES009M Immersion sensor	1.00	pcs
240	007609	PCB holder	1.00	pcs
270	005025	Power relay OMRON G7L-2A-BUB 200/240AC for PMX,BioWIN XL, BioWIN10-26,FireWIN,VarioWIN, BioWIN XL 35-60	1.00	pcs
200	009929	Terminal bar MS 8-pin 8x8mm for VarioWIN,FireWIN, BioWIN XL 35-60	1.00	pcs
320	007626	Thermocouple	1.00	pcs
330	005672	Thermostat LS1+100-6U	1.00	pcs
340	007096	Transformer for O2 sensor 18VA for LogWIN Premium 180-505	1.00	pcs
360	006833	Wago terminal block 261; 4-pin "12V GND"	1.00	pcs
350	006834	Wago terminal block 261; 4-pin "safety 1-4"	1.00	pcs
370	007656	Wago terminal block 261; 6-pin	1.00	pcs

Heating surface cleaning (A000156)

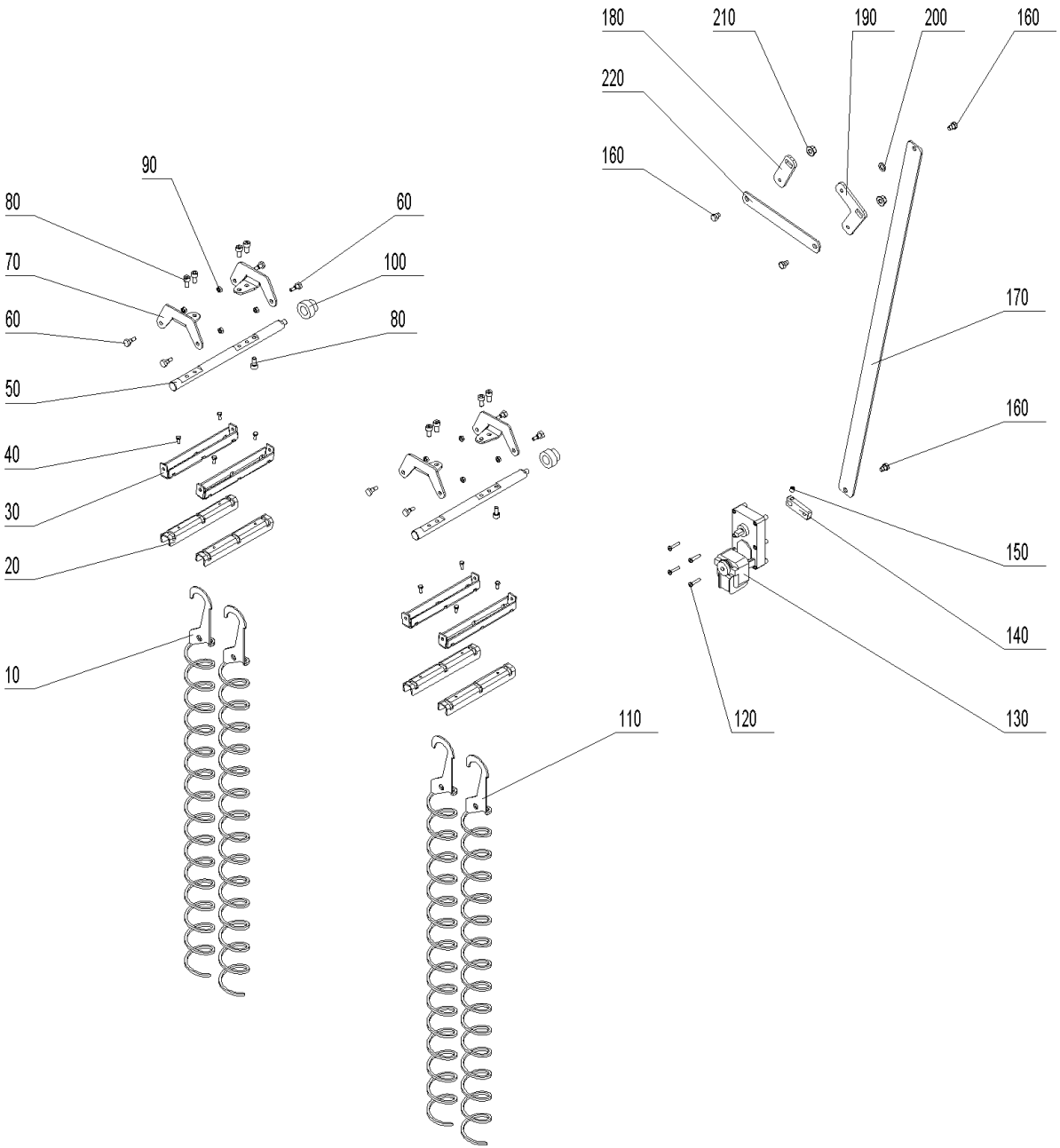

Heating surface cleaning (A000156)

Item no.	Article no.	Description	Quantity	Unit
20	047065	Bottom cleaning profile for BioWIN XL 35-60	4.00	pcs
160	012502	Collar screw	4.00	pcs
120	016837	Cylinder screw M5x25 ISO 7045	4.00	pcs
180	053281	de: Achsenhebel links HFR PW24-60	1.00	pcs
190	053280	de: Achsenhebel rechts HFR PW24-60	1.00	pcs
70	052738	de: Lagerarm für Heizflächenreinigung PW24-60	4.00	pcs
110	052768	de: Reinigungsschnecke links PW40-60	4.00	pcs
10	053981	de: Reinigungsschnecke rechts PW24-60	4.00	pcs
140	053282	de: Rüttelhebel Motor HFR PW24-60	1.00	pcs
200	018031	de: Scheibe ISO 7092 - 10 - blank	1.00	pcs
220	052781	de: Verbinder Rüttelachse HFR PW24-60	1.00	pcs
170	053284	de: Verbindung Heizflächenreinigung PW24-60	1.00	pcs
50	052737	de: Welle für Heizflächenreinigung PW24-60	2.00	pcs
80	053102	de: Zylinderschraube m. Innensechskant ISO 4762 - M 8 x 16 - A4 (DIN 912)	10.00	pcs
100	047416	Heating surface cleaning bearing for BioWIN XL 35-60	2.00	pcs
210	016567	Hexagon nut M10 with flange and gearing (not illustrated)	2.00	pcs
40	017020	Hexagon screw Niro DIN 933 - M5x12 - A2 for HMX, FireWIN, VarioWIN	8.00	pcs
130	044665	Motor	1.00	pcs
90	016596	Nut DIN 934 - M6 - A2 for VarioWIN, FireWIN, BioWIN10-26, BioWIN XL 35-60	8.00	pcs
60	006756	Screw M6 for heating surface cleaning for PMX,BioWIN 10-26,FireWIN, BioWIN XL 35-60, LogWIN Premium 180-505	8.00	pcs
150	033112	Setscrew M8x10 DIN916	1.00	pcs
30	047064	Top cleaning profile for BioWIN XL 35-60	4.00	pcs

Ignition (A000158)

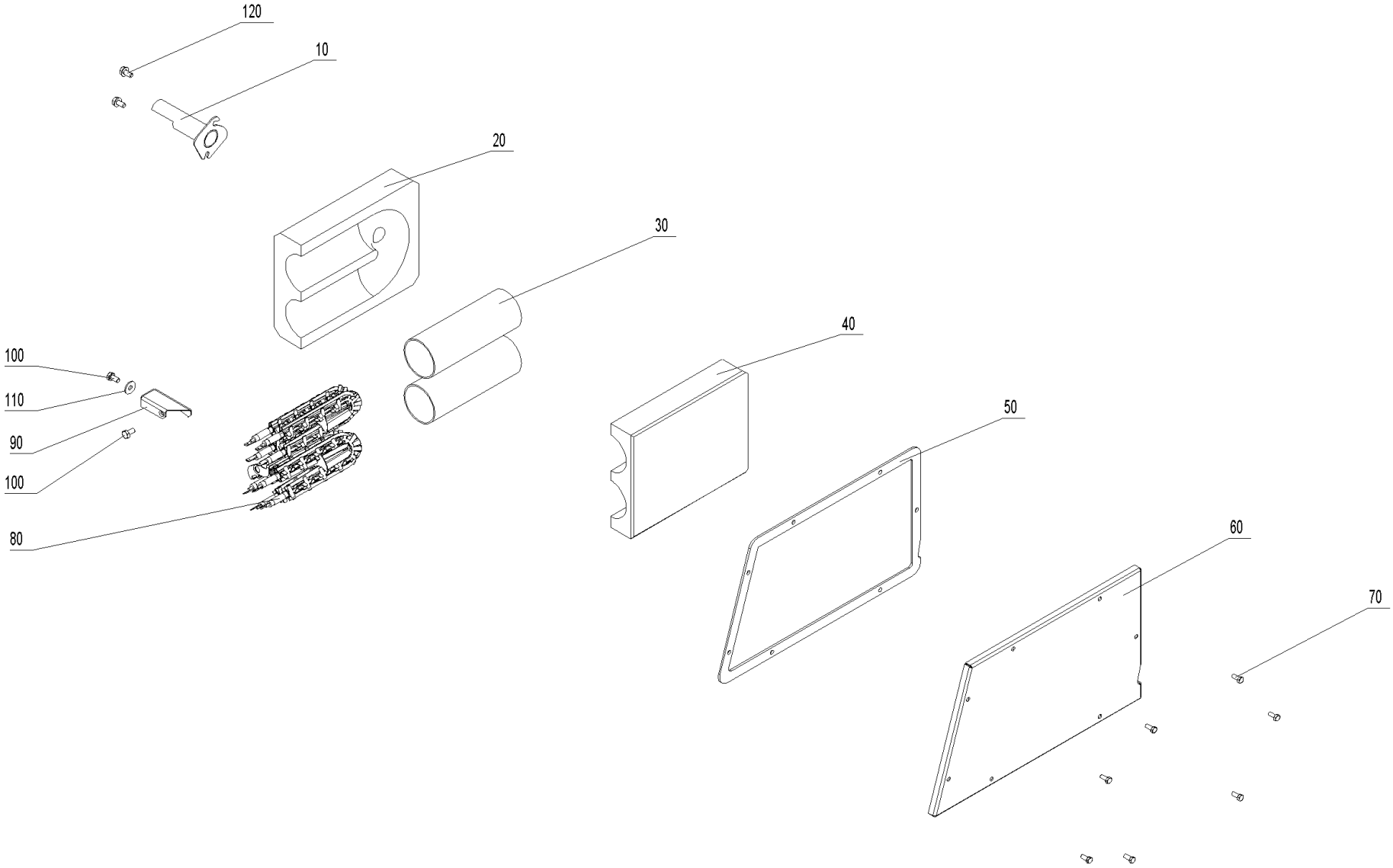

Ignition (A000158)

Item no.	Article no.	Description	Quantity	Unit
60	052717	de: Abdeckung Zündung PW24-60	1.00	pcs
90	052387	de: Anschlag Zündung PW24-60	1.00	pcs
50	052993	de: Dichtung Zündung PW24-60	1.00	pcs
20	052713	de: Isolierstein unten Zündung PW24-60	1.00	pcs
10	052716	de: Zündrohr kpl. PW24/30	1.00	pcs
10	052766	de: Zündrohr kpl. PW40-60	1.00	pcs
110	031753	Disc 6 ISO 7093	1.00	pcs
100	017051	Hexagon screw M6x12 DIN 933 (not illustrated)	2.00	pcs
120	031549	Hexagon screw M6x12 DIN 7500	2.00	pcs
70	017020	Hexagon screw Niro DIN 933 - M5x12 - A2 for HMX, FireWIN, VarioWIN	7.00	pcs
80	055201	Ignition element BioWIN10-26, FireWIN from lot 15, VarioWIN from lot 15 BioWIN XL, LWK	1.00	pcs
30	050489	Ignition tube LWP18-50, LWK	2.00	pcs
40	007484	Insulating stone top for automatic ignition LWP18-50, LWK	1.00	pcs

Air control PL (A000159)

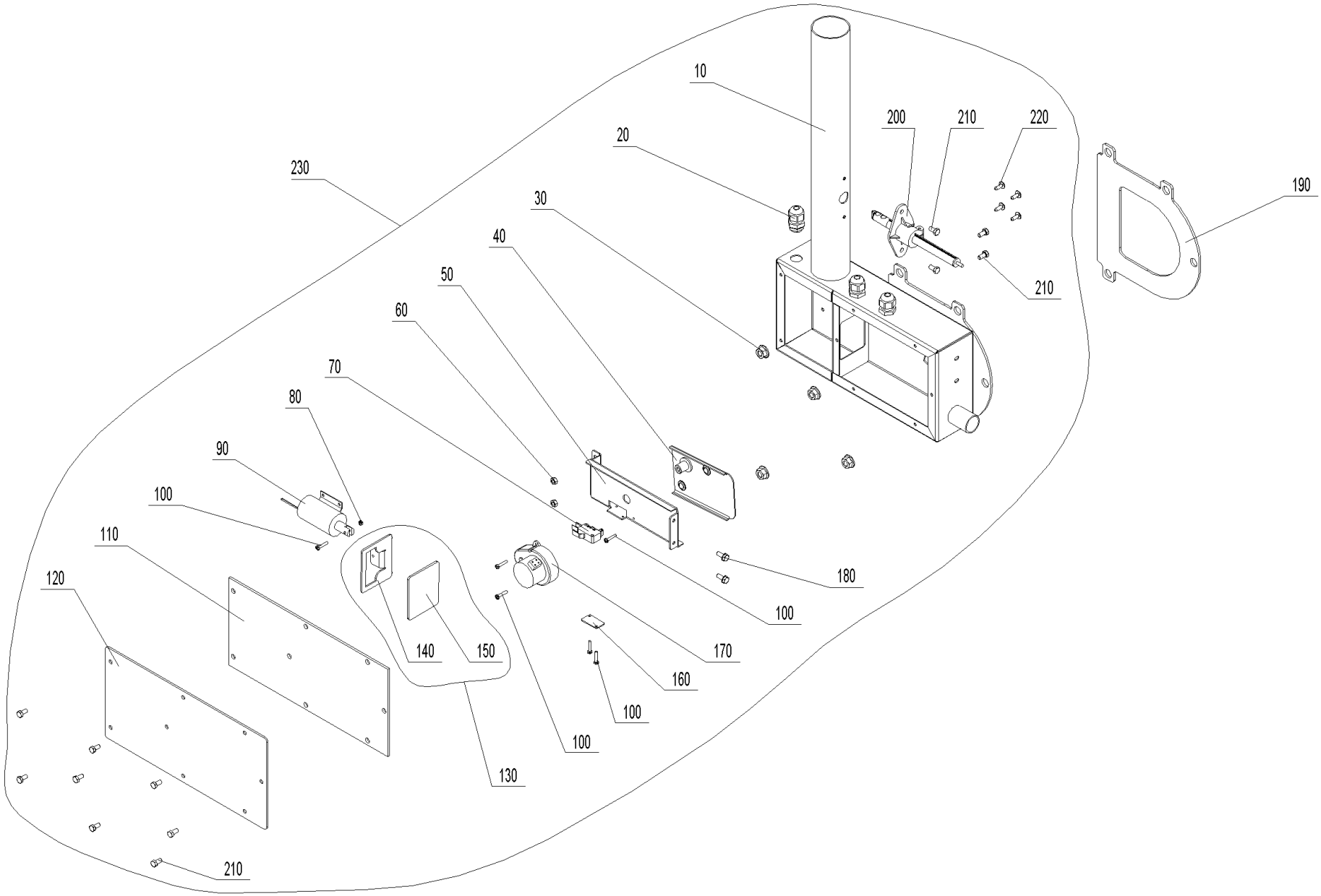

Air control PL (A000159)

Item no.	Article no.	Description	Quantity	Unit
70	009277	Air control microswitch	1.00	pcs
220	018139	Cylinder screw 4.2x13 DIN7981SP (not illustrated)	4.00	pcs
140	052885	de: Absperrpl. PW24-60	1.00	pcs
130	054578	de: Absperrplatte kpl. PW24-60	1.00	pcs
50	052884	de: Befestigungsblende PW24-60	1.00	pcs
120	052881	de: Deckel Luftschacht PW24-60	1.00	pcs
150	052886	de: Dichtung Absperrplatte PW24-60	1.00	pcs
110	052882	de: Dichtung Deckel Luftschacht PW24-60	1.00	pcs
190	052890	de: Dichtung Flansch Luftschacht PW24-60	1.00	pcs
40	053649	de: Luftklappe PW24-60	1.00	pcs
230	052893	de: Luftregelung kpl. PW24-60	1.00	pcs
10	052891	de: Luftschacht kpl. PW24-60	1.00	pcs
170	009579	de: Motor - Luftklappen PW24-60	1.00	pcs
160	051044	de: Platte Mikroschalter PW24-60	1.00	pcs
200	052878	de: Strömungsmessumformer PW24-60	1.00	pcs
100	016766	de: Zyl.-Schrauben M3x16 verz.m.KS. DIN 7985	6.00	pcs
90	052911	de: Zylindermagnet PW24-60	1.00	pcs
80	016551	Hexagon nut M3 DIN 934	1.00	pcs
60	017035	Hexagon nut M5 DIN 934	2.00	pcs
30	016553	Hexagon nut M8 with flange and gearing	4.00	pcs
180	031545	Hexagon screw M5x12 DIN 7500 (not ilustrated)	2.00	pcs
210	017020	Hexagon screw Niro DIN 933 - M5x12 - A2 for HMX, FireWIN, VarioWIN	12.00	pcs

Air control PL (A000159)

Item no.	Article no.	Description	Quantity	Unit
20	006340	Mount connections PG9	3.00	pcs

Air control SL/TL (A000161)

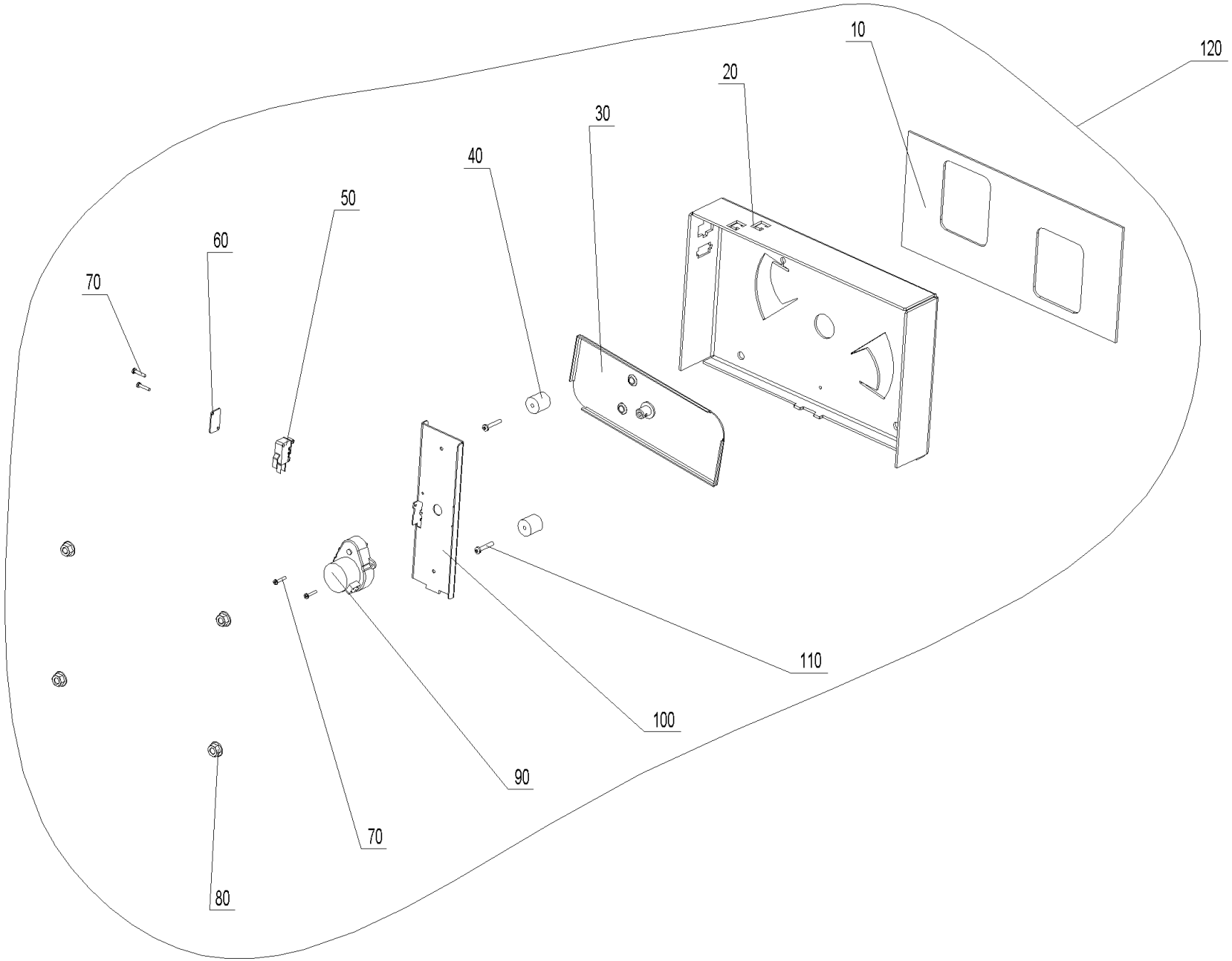

Air control SL/TL (A000161)

Item no.	Article no.	Description	Quantity	Unit
50	009277	Air control microswitch	1.00	pcs
40	053829	de: Abstandswelle PW 24-60	2.00	pcs
100	052899	de: Befestigungsblech Stellmotor PW24-60	1.00	pcs
10	052900	de: Dichtung Luftregelung S/T PW24-60	1.00	pcs
20	052897	de: Konsole Luftregelung PW24-60	1.00	pcs
30	053648	de: Luftklappe PW24-60	1.00	pcs
120	052896	de: Luftregelung kpl. PW24-60	1.00	pcs
90	009579	de: Motor - Luftklappen PW24-60	1.00	pcs
60	051044	de: Platte Mikroschalter PW24-60	1.00	pcs
70	016766	de: Zyl.-Schrauben M3x16 verz.m.KS. DIN 7985	4.00	pcs
110	016802	de: Zyl.-Schrauben M4x25 verz.m.KS DIN 7985	2.00	pcs
80	016553	Hexagon nut M8 with flange and gearing	4.00	pcs

Ash conveyor (A000154)

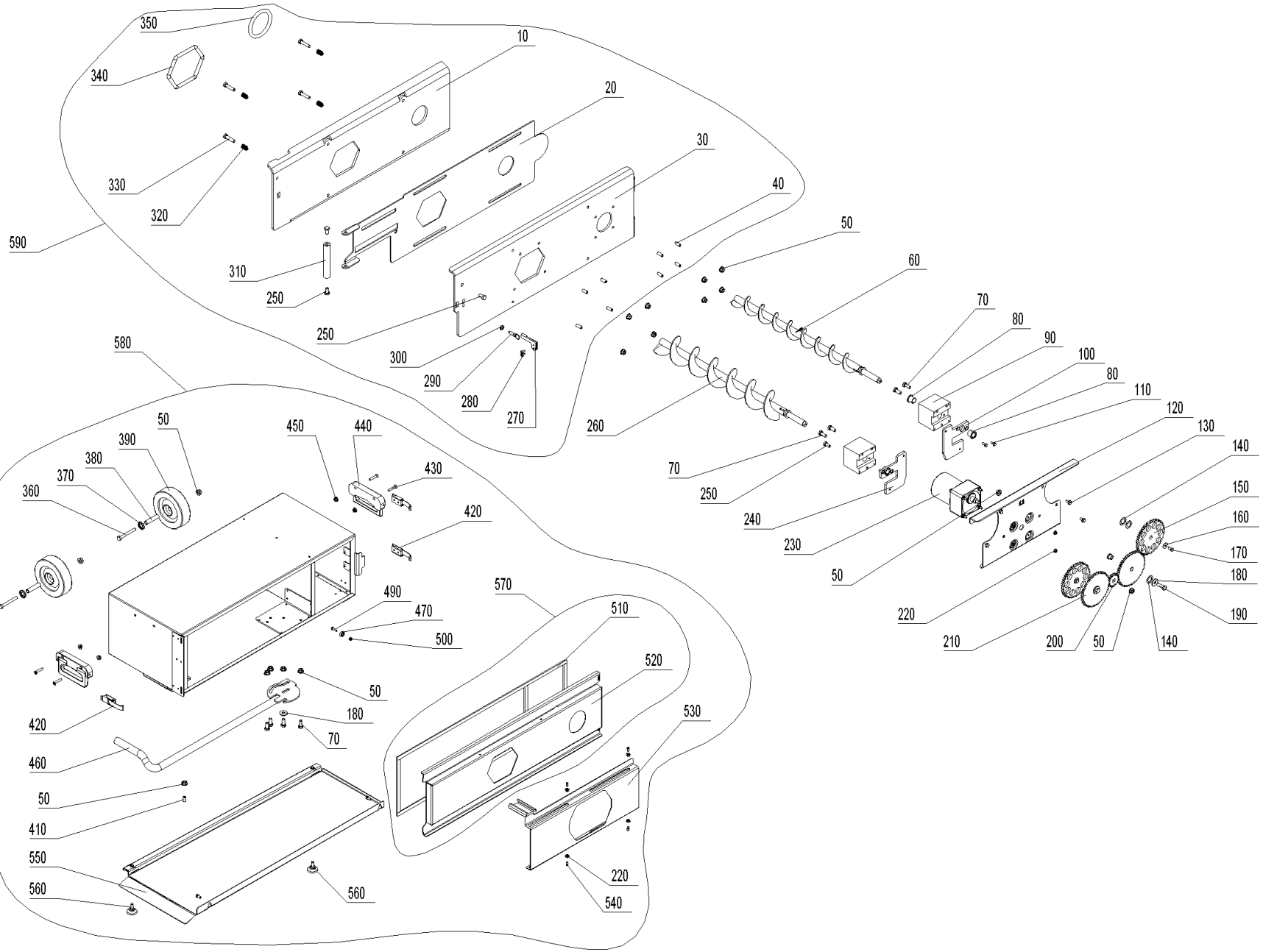

Ash conveyor (A000154)

Item no.	Article no.	Description	Quantity	Unit
90	044680	Ash removal flange, complete with bearing bushes for BioWIN 10-26 (Only BioWIN Exklusiv), BioWIN XL 35-60	2.00	pcs
230	050901	Auger motor SPG	1.00	pcs
280	018140	Cylinder screw 4.2x13 DIN7981ST (not illustrated)	2.00	pcs
370	054574	de: Achsenklemmring ohne Kappe 12mm FDST brüniert	2.00	pcs
270	053993	de: Arretierungslasche PW24-60	1.00	pcs
60	052193	de: Ascheaustragung Schnecke hinten kpl. PW24-60	1.00	pcs
260	052217	de: Ascheaustragung Schnecke vorne kpl. PW24-60	1.00	pcs
570	054576	de: Aschebox Deckel kpl. PW24-60	1.00	pcs
520	054493	de: Aschebox Deckel PW24-60	1.00	pcs
30	053990	de: Ascheboxflansch PW24-60	1.00	pcs
590	053994	de: Ascheboxflansch PW24-60	1.00	pcs
460	054471	de: Aschebox Griff PW24-60	1.00	pcs
380	054490	de: Aschebox Lagerrohr PW24-60	2.00	pcs
550	054485	de: Aschebox Sockel PW24-60	1.00	pcs
530	054494	de: Aschebox Verschluß PW24-60	1.00	pcs
10	053992	de: Dichtblech Ascheboxflansch PW24-60	1.00	pcs
350	053998	de: Dichtung AAT hinten PW24-60	1.00	pcs
340	052375	de: Dichtung AAT vorne PW24-60	1.00	pcs
510	054571	de: Dichtung Aschelade PW24-60	1.00	pcs
320	053997	de: Druckfeder	4.00	pcs
240	051169	de: Flanschplatte links AAT PW24-60	1.00	pcs
100	052371	de: Flanschplatte rechts AAT PW24-60	1.00	pcs

Ash conveyor (A000154)

Item no.	Article no.	Description	Quantity	Unit
40	033536	de: Gewindestift M8 x 20 VZ, DIN 913	8.00	pcs
440	054570	de: Griff	2.00	pcs
310	053995	de: Griff Aschelade PW24-60	1.00	pcs
120	052197	de: Konsole AAT PW24-60	1.00	pcs
580	052700	de: PW9 Aschebox zu Hackgut-Vergaser	1.00	pcs
470	053906	de: Rillenkugellager	2.00	pcs
140	047545	de: Scheibe D25/16,2x1,5 verz.	6.00	pcs
20	053991	de: Schieber Ascheboxflansch PW24-60	1.00	pcs
330	031550	de: Sechskantschraube DIN 931 - M8x35 - 8.8 - verzinkt	4.00	pcs
490	015025	de: Sechskantschraube DIN 933 - M5x16 - 8.8 - verzinkt	2.00	pcs
360	033093	de: Sechskantschraube DIN 933 - M8x65 - 8.8	2.00	pcs
430	054573	de: Senkschraube M6x30 DIN965	4.00	pcs
210	052195	de: Stirnrad Getriebe PW24-60	2.00	pcs
200	052372	de: Stirnrad Motor PW24-60	1.00	pcs
150	052196	de: Stirnrad Schnecke PW24-60	2.00	pcs
540	033092	de: Zapfenschrauben M5X5	4.00	pcs
160	031753	Disc 6 ISO 7093	2.00	pcs
180	031755	Disc 8 ISO 7093	3.00	pcs
80	012508	Friction bearing with connector	4.00	pcs
220	016565	Hexagon nut M5 with flange and gearing (not illustrated)	8.00	pcs
300	016659	Hexagon nut M8 DIN434	1.00	pcs
50	016553	Hexagon nut M8 with flange and gearing	17.00	pcs

Ash conveyor (A000154)

Item no.	Article no.	Description	Quantity	Unit
450	016566	Hexagon nut with flange and gearing M6	4.00	pcs
70	017873	Hexagon screw DIN 933 - M8x20 - A2 for VarioWIN, FireWIN	8.00	pcs
110	031545	Hexagon screw M5x12 DIN 7500 (not ilustrated)	4.00	pcs
170	017051	Hexagon screw M6x12 DIN 933 (not illustrated)	2.00	pcs
130	031549	Hexagon screw M6x12 DIN 7500	4.00	pcs
250	017872	Hexagon screw M8x16, DIN 933 for BioWIN XL 35-60	4.00	pcs
190	017191	Hexagon screw M8x25 DIN 933	2.00	pcs
560	009991	Leg - JTLO 38 - M8x16 for VarioWIN	2.00	pcs
290	007191	Locking bolt with pull ring GN 717-5-M8-A-ST	1.00	pcs
500	016727	Lock nut M5	2.00	pcs
410	051836	Spring-loaded pressure piece M8	0.00	pcs
420	009546	Spring lock	3.00	pcs
390	006888	Wheel AG 125-12	2.00	pcs

Ash removal (A000150)

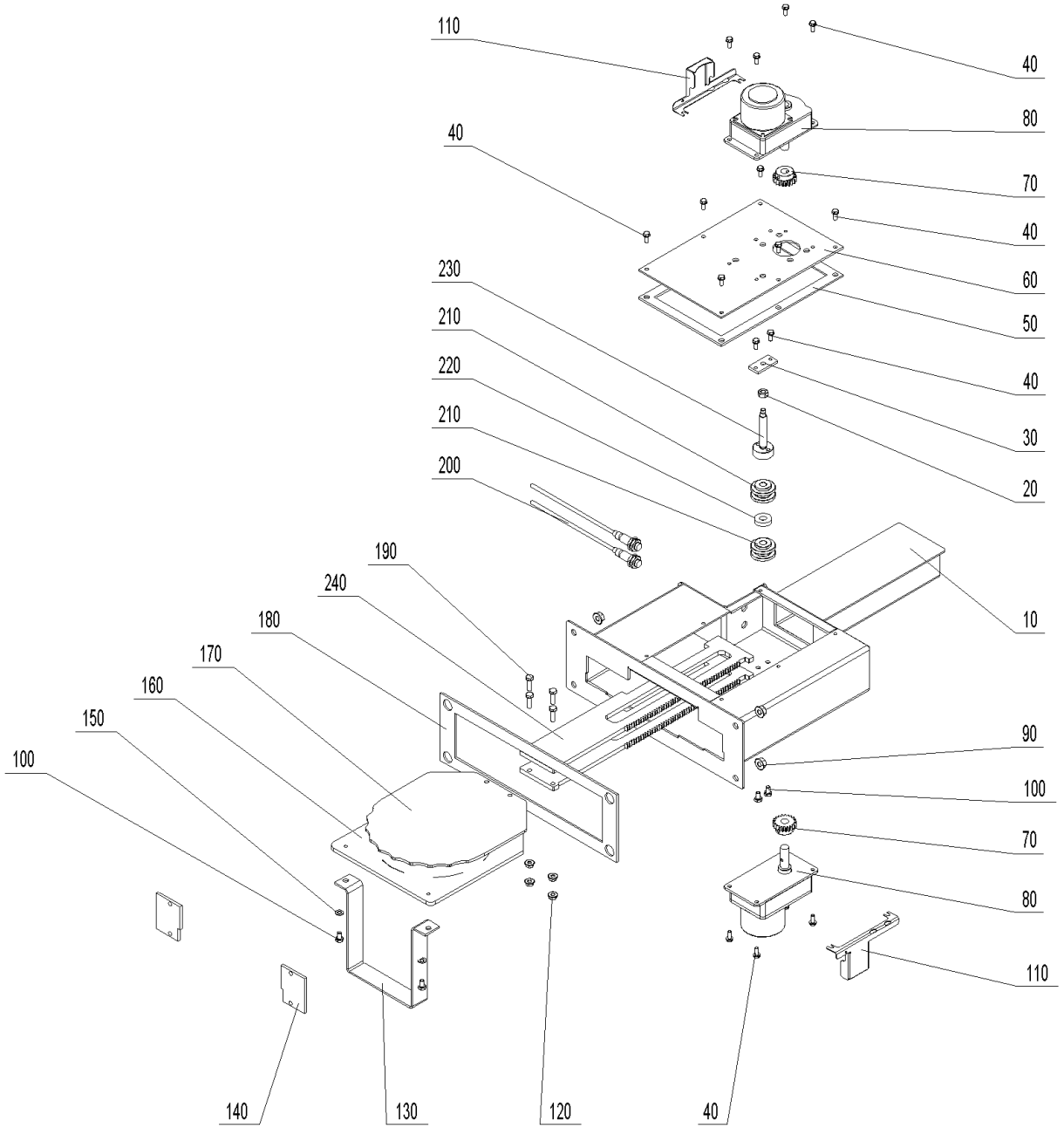

Ash removal (A000150)

Item no.	Article no.	Description	Quantity	Unit
210	007125	Bearing for vibrating drive	4.00	pcs
160	052163	de: Ascheschieber PW40-60	1.00	pcs
130	052907	de: Ascheverdrängblech PW24-60	1.00	pcs
60	052148	de: Deckel oben Entaschung PW24-60	1.00	pcs
50	052151	de: Dichtung Deckel Entaschung PW24-60	1.00	pcs
180	052152	de: Dichtung Fl. Entaschung PW24-60	1.00	pcs
220	052149	de: Distanzscheibe PW24-60	1.00	pcs
140	052904	de: Führungsplatte Entaschung PW24/30	0.00	pcs
170	052160	de: Glutbettschieber für PW40-60	1.00	pcs
110	054167	de: Kabelabdeckung Motor PW24-60	2.00	pcs
10	052140	de: Konsole Entaschung PW24-60	1.00	pcs
30	052150	de: Lagerungsblech PW24-60	1.00	pcs
80	053641	de: Motor - Entaschung zu PuroWIN	1.00	pcs
150	031713	de: Scheibe ISO 7089 - 6 - A2	2.00	pcs
70	052154	de: Stirnrad PW24-60	2.00	pcs
230	052153	de: Welle Lagerung PW24-60	1.00	pcs
240	053651	de: Zahnstange ob. PW40-60	2.00	pcs
90	016553	Hexagon nut M8 with flange and gearing	4.00	pcs
120	016566	Hexagon nut with flange and gearing M6	4.00	pcs
100	015026	Hexagon screw DIN 933 - M6x10 - 8.8 - galvanised for VarioWIN, FireWIN	6.00	pcs
40	031545	Hexagon screw M5x12 DIN 7500 (not ilustrated)	20.00	pcs
190	015471	Hexagon screw M6x20 DIN 933	4.00	pcs

Ash removal (A000150)

Item no.	Article no.	Description	Quantity	Unit
20	015992	Nut M8 DIN 934 V2 - LogWIN Klassik pellet ready	1.00	pcs
200	006832	Proximity switch M12, inductive	2.00	pcs

Boiler (A000147)

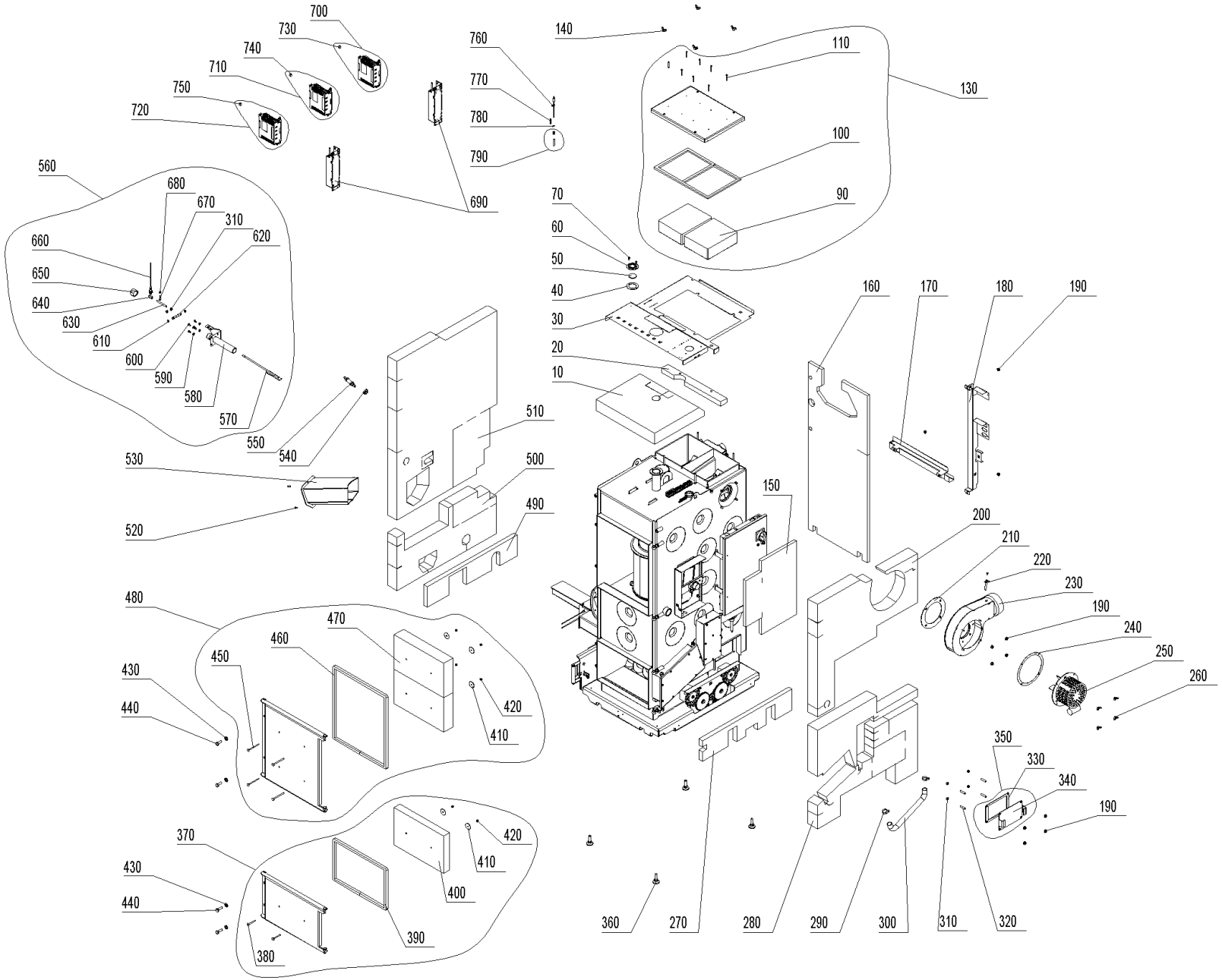

Boiler (A000147)

Item no.	Article no.	Description	Quantity	Unit
210	050825	Blower seal LWK	1.00	pcs
420	016192	Cap nut	6.00	pcs
350	047991	Coasting surface bottom cover for BioWIN XL 35-60	1.00	pcs
770	050647	Combustion chamber sensor spring	1.00	pcs
110	016719	Cylinder drilling screw 4.2 x 38 DIN7504	8.00	pcs
340	047188	de: Abdeckblech BW60, PW	1.00	pcs
250	051039	de: Abgasgebläse kpl. LWK, PW	1.00	pcs
370	054581	de: Aschetür mont. PW24-60	1.00	pcs
390	052378	de: Dichtschnur Ascheür PW24-60	1.00	pcs
460	052381	de: Dichtschnur Heiztür PW24-60	1.00	pcs
330	047190	de: Dichtung Abdeckblende 60BW, PW	1.00	pcs
240	054468	de: Dichtung Gebläsemotor PW24-60	1.00	pcs
100	051868	de: Dichtung Reinigungsdeckel PW24-49	1.00	pcs
40	051712	de: Dichtung Schauloch PW24-60	1.00	pcs
730	054197	de: Eprom auf STOK program. zu FU PuroWIN Zuführung direkt / pneumatisch	1.00	pcs
750	054199	de: Eprom auf TANK program. zu FU PuroWIN Zuführung pneumatisch	1.00	pcs
740	054196	de: Eprom RAS program. zu FU PuroWIN Zuführung direkt	1.00	pcs
710	054847	de: ET-SET: FU mit Eprom RAS zu Zuführung direkt PuroWIN	1.00	pcs
700	054848	de: ET-SET: FU mit Eprom STOK zu Zuführung direkt/pneumatisch PuroWIN	1.00	pcs
720	054849	de: ET-SET: FU mit Eprom TANK zu Zuführung pneumatisch PuroWIN	1.00	pcs
690	054185	de: Filter zu FU, 0,75kW, 1-Phase, PuroWIN	2.00	pcs
140	019414	de: Flügelmutter ähnl. DIN 315 - M8 - St - verzinkt	4.00	pcs

Boiler (A000147)

Item no.	Article no.	Description	Quantity	Unit
570	052176	de: Fühler kpl. PW24/30	1.00	pcs
570	054467	de: Fühler kpl. PW40-60	1.00	pcs
230	053011	de: Gebläsekasten lackiert LWK, PW	1.00	pcs
630	017032	de: Gewindebolzen M8x80 verzinkt	1.00	pcs
50	000307	de: Glasscheibe BOROFLOAT Ø 45/4 mm	1.00	pcs
480	054580	de: Heiztür mont. PW24-60	1.00	pcs
290	029424	de: IDEAL-Schlauchklemmen 22-32mm	2.00	pcs
30	052976	de: Isolierabdeckung oben PW24-60	1.00	pcs
400	052380	de: Isolierstein Aschetür PW24-60	1.00	pcs
470	052384	de: Isolierstein Heiztür PW24-60	2.00	pcs
90	051862	de: Isolierstein NHF links PW24-60	2.00	pcs
160	052732	de: Isolierung hinten oben PW24-60	1.00	pcs
490	053293	de: Isolierung links innen PW24-60	1.00	pcs
510	052774	de: Isolierung links PW24-60	1.00	pcs
500	053295	de: Isolierung links unten PW24-60	1.00	pcs
20	053810	de: Isolierung oben hinten PW24-60	1.00	pcs
10	052977	de: Isolierung oben PW24-60	1.00	pcs
270	053292	de: Isolierung rechts innen PW24-60	1.00	pcs
200	052189	de: Isolierung rechts PW24-60	1.00	pcs
280	053294	de: Isolierung rechts unten PW24-60	1.00	pcs
150	052736	de: Isolierung Schaltfeld PW24-60	1.00	pcs
170	052996	de: Kabelschacht unten PW24-60	1.00	pcs

Boiler (A000147)

Item no.	Article no.	Description	Quantity	Unit
180	052704	de: Kableschacht senkrecht PW24-60	1.00	pcs
650	008850	de: Kappe Nr. 300, 1" schwarz	1.00	pcs
620	052099	de: Level Controll Achse PW24-60	1.00	pcs
580	052734	de: Level Controll Rohr kpl. PW24/30	1.00	pcs
580	052735	de: Level Controll Rohr kpl. PW40-60	1.00	pcs
560	054176	de: Level Control montiert PW24/30	1.00	pcs
560	054175	de: Level Control montiert PW40-60	1.00	pcs
310	031154	de: Mutter M8 - A4	4.00	pcs
800	009185	de: Netzfilter FN2020-10-06 zu PuroWIN	1.00	pcs
130	054579	de: Reinigungsdeckel montiert PW24-60	1.00	pcs
60	087300	de: Rosette für Schauglas	1.00	pcs
300	052989	de: Schlauch Airmetall PU1 PW24-60	1.00	pcs
530	053114	de: Schneckenrohr kpl. PW24/30	1.00	pcs
530	052731	de: Schneckenrohr kpl. PW40-60	1.00	pcs
440	017865	de: Sechskantschraube M12x35 - 8.8	4.00	pcs
610	052174	de: Sicherungsring 12 X 1	2.00	pcs
780	031274	Eyelet M6	1.00	pcs
360	009994	Foot M12X40 JTB38 for HMX, EasyWIN Klassik/Premium 180, LogWIN Premium 180-505	4.00	pcs
680	016594	Hexagon nut M6 DIN 934	1.00	pcs
190	016553	Hexagon nut M8 with flange and gearing	11.00	pcs
670	015041	Hexagon screw DIN 933 - M6x25 - 8.8 - galvanised for VarioWIN, FireWIN	1.00	pcs
70	031545	Hexagon screw M5x12 DIN 7500 (not ilustrated)	2.00	pcs

Boiler (A000147)

Item no.	Article no.	Description	Quantity	Unit
600	017051	Hexagon screw M6x12 DIN 933 (not illustrated)	4.00	pcs
550	051646	Lambda sensor	1.00	pcs
540	007094	Lambda sensor insulating ring for LogWIN Premium 180-505	1.00	pcs
520	020095	M5x16 TT raised countersunk head screw, DIN 7500ME for VestoWIN Premium 200-202, VestoWIN Klassik 170-220	2.00	pcs
640	048554	M8 long nut	1.00	pcs
790	051069	Protective tube for combustion chamber sensor, complete	1.00	pcs
220	041498	Protective tube for exhaust gas sensor	1.00	pcs
660	006832	Proximity switch M12, inductive	1.00	pcs
380	016186	Round-head screw M6x60	2.00	pcs
450	016190	Round-head screw M6x90	4.00	pcs
320	016163	Setscrew DIN913 - M8 x 40-A2 for BioWIN 10-26	4.00	pcs
760	007626	Thermocouple	1.00	pcs
430	017183	U-Washer DIN 125B - M12 - galvanised for VarioWIN, FireWIN, BioWIN XL 35-60	4.00	pcs
590	020540	U-Washer DIN 134 - M6 - galvanised for VarioWIN, FireWIN	4.00	pcs
410	016191	Washer M6 4x40x1,5	6.00	pcs
260	019410	Wing nut M6	4.00	pcs

Cladding (A000148)

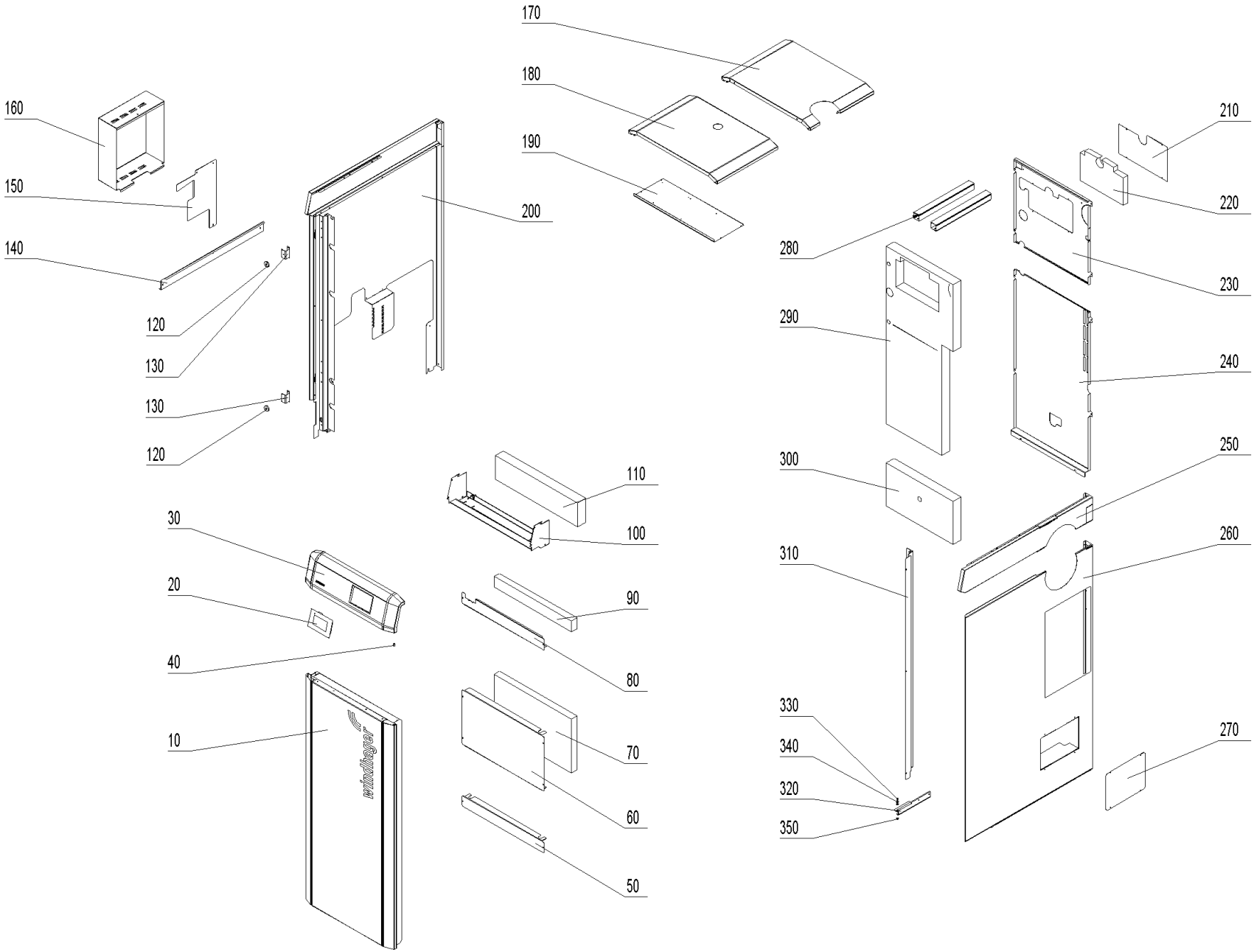

Cladding (A000148)

Item no.	Article no.	Description	Quantity	Unit
160	053812	de: Abdeckung Steckerkonsole PW24-60	1.00	pcs
30	054195	de: Bedienfeld PW	1.00	pcs
100	054163	de: Befestigungsblech Verkleidung PW24-60	1.00	pcs
130	053753	de: Haltebügel Magnet LWPT 18-36	2.00	pcs
190	053813	de: Isolierabdeckung Verbraucherr. PW24-60	1.00	pcs
110	053809	de: Isolierung Bedienfeld PW24-60	1.00	pcs
300	052778	de: Isolierung HFR Gestänge PW24-60	1.00	pcs
220	052776	de: Isolierung HFR oben PW24-60	1.00	pcs
290	052775	de: Isolierung hinten PW24-60	1.00	pcs
70	053297	de: Isolierung vorne mitte PW24-60	1.00	pcs
90	053296	de: Isolierung vorne oben PW24-60	1.00	pcs
120	001761	de: Magnet Ø31 gummiummantelt	2.00	pcs
200	054376	de: Seitenwand links PW24-60	1.00	pcs
150	054162	de: Seitenwand links unten PW24-60	1.00	pcs
270	053814	de: Verkleidung Abdeckung Reinigungsdeckel PW24-60	1.00	pcs
310	052982	de: Verkleidung Abdeckung Seitenwand rechts PW24-60	1.00	pcs
60	052983	de: Verkleidung Abdeckung vorne mitte PW24-60	1.00	pcs
80	052985	de: Verkleidung Abdeckung vorne oben PW24-60	1.00	pcs
50	052984	de: Verkleidung Abdeckung vorne unten PW24-60	1.00	pcs
210	052777	de: Verkleidung Deckel HFR oben PW24-60	1.00	pcs
170	053819	de: Verkleidung Deckel hinten PW24-60	1.00	pcs
180	053818	de: Verkleidung Deckel vorne PW24-60	1.00	pcs

Cladding (A000148)

Item no.	Article no.	Description	Quantity	Unit
230	052787	de: Verkleidung Rückwand oben PW24-60	1.00	pcs
240	051716	de: Verkleidung Rückwand unten PW24-60	1.00	pcs
320	054165	de: Verkleidung Schiene links PW24-60	1.00	pcs
140	054165	de: Verkleidung Schiene links PW24-60	1.00	pcs
250	053822	de: Verkleidung Seitenwand rechts oben PW24-60	1.00	pcs
260	053815	de: Verkleidung Seitenwand rechts PW24-60	1.00	pcs
10	054575	de: Verkleidung Tür kpl. PW24-60	1.00	pcs
280	050978	de: Wand und Deckenkanal BW2, PW	2.00	m
330	033092	de: Zapfenschrauben M5X5	1.00	pcs
340	018309	Disc 5 DIN134	2.00	pcs
40	015507	Dog point screw	1.00	pcs
350	016586	Hexagon nut M5 DIN 934	1.00	pcs
20	001009	INF8 MES INFINITY InfoWIN Touch	1.00	pcs

combustion chamber (A000153)

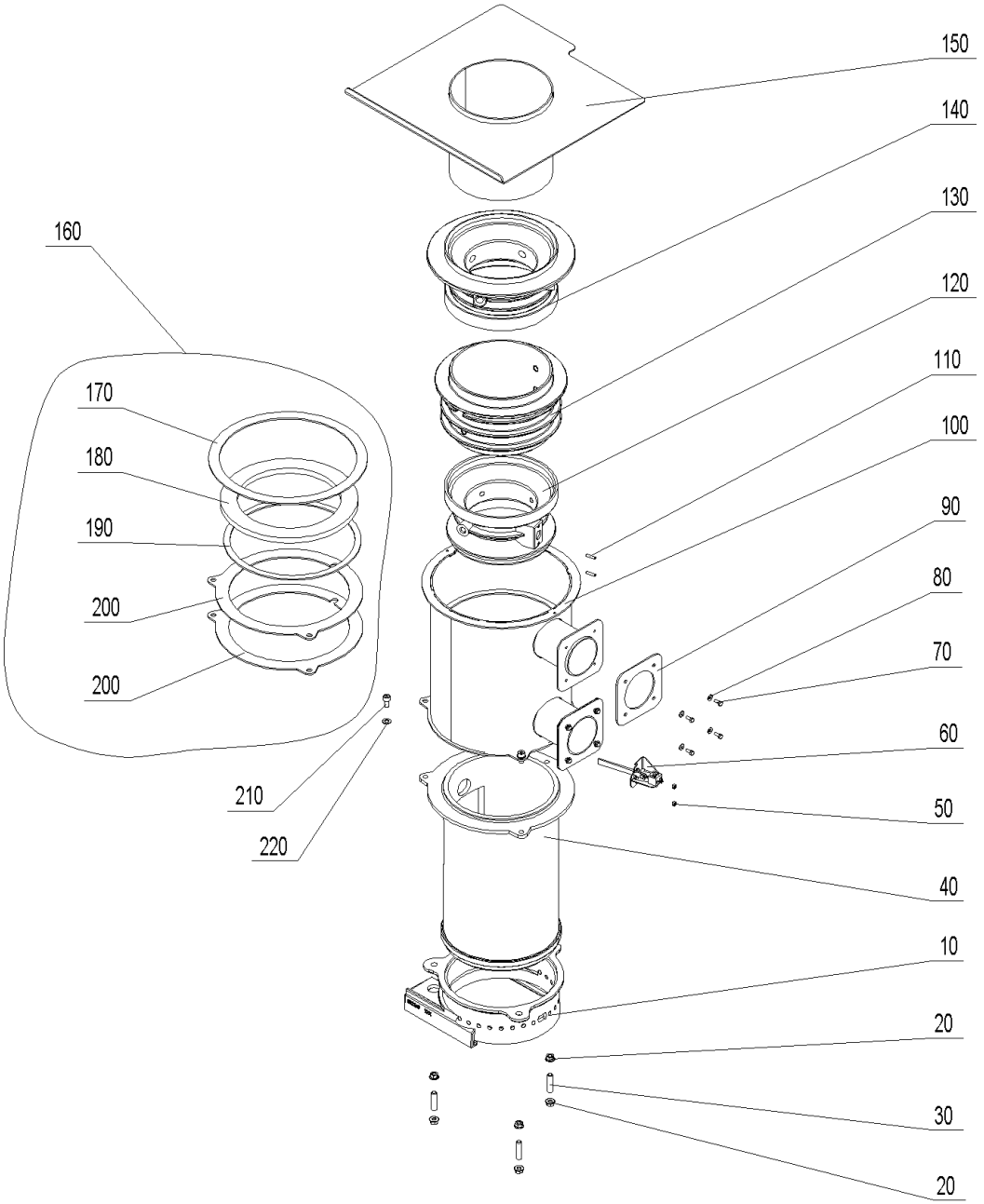

combustion chamber (A000153)

Item no.	Article no.	Description	Quantity	Unit
90	052088	de: Brennerdichtung rechts PW24-60	2.00	pcs
100	052079	de: Brenner kpl. geschw. PW40-60	1.00	pcs
200	053647	de: Dichtung Brennerfl. PW40-60	1.00	pcs
180	052090	de: Dichtung Sek/Ter PW40-60	1.00	pcs
190	052089	de: Dichtung Sekundärluftdüse PW40-60	1.00	pcs
160	054375	de: Dichtungsset zu PW 40-60	1.00	pcs
170	052091	de: Dichtung Tertiärluft PW40-60	1.00	pcs
110	054158	de: Gewindestifte mit ISK und Kegelkuppe ISO4026/DIN 913 M 5X 20 Edelstahl A2	2.00	pcs
30	052061	de: Gewindestift M10x40 A2	3.00	pcs
10	052866	de: Konus D270 PW40-60	1.00	pcs
130	052081	de: Sekundärluftdüse ob. PW60	1.00	pcs
120	052080	de: Sekundärluftdüse un. PW60	1.00	pcs
60	053336	de: Sekundärluftzündung kpl. mont. PW24-60	1.00	pcs
140	052082	de: Tertiärluftdüse PW60	1.00	pcs
40	053598	de: Vergaserrohr 270 PW40-60	1.00	pcs
150	052086	de: Vergaserrohr oben kpl. PW 40-60	1.00	pcs
210	053834	de: Zylinderschraube m. Innensechskant M8 x 20 - A4	6.00	pcs
80	018309	Disc 5 DIN134	8.00	pcs
220	024779	Disc 8 ISO 7089	6.00	pcs
50	017035	Hexagon nut M5 DIN 934	2.00	pcs
20	016567	Hexagon nut M10 with flange and gearing (not illustrated)	6.00	pcs
70	017020	Hexagon screw Niro DIN 933 - M5x12 - A2 for HMX, FireWIN, VarioWIN	8.00	pcs

Control panel (A000160)

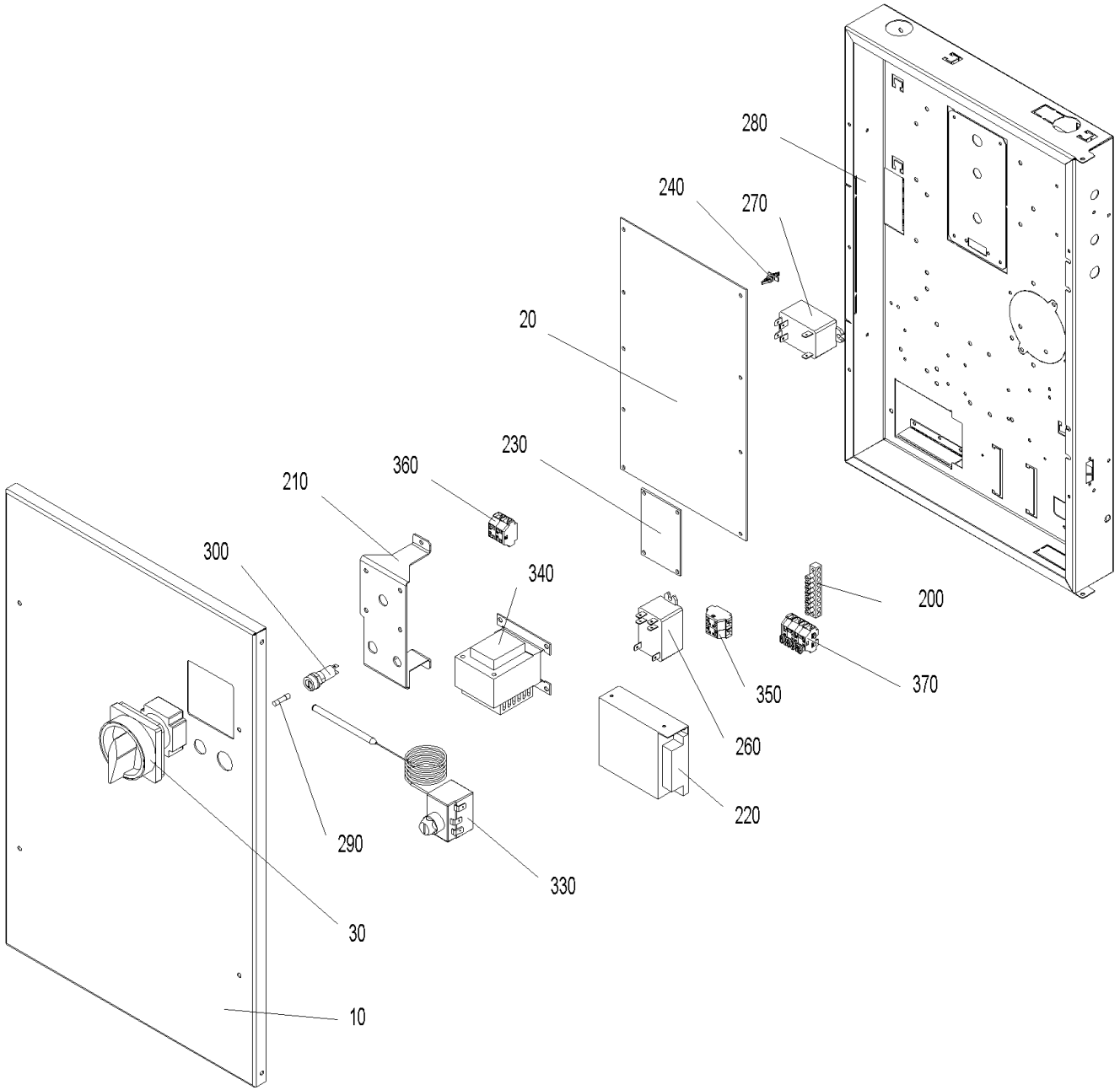

Control panel (A000160)

Item no.	Article no.	Description	Quantity	Unit
290	003228	6.3A fuse (not illustrated)	1.00	pcs
380	018140	Cylinder screw 4.2x13 DIN7981ST (not illustrated)	1.00	pcs
10	053289	de: Deckel Schaltfeld PW24-60	1.00	pcs
20	012007	de: Feuerungsautomat PW	1.00	pcs
30	012010	de: Hauptschalter 2polig 16 A PW	1.00	pcs
145	053326	de: Ka. Primärzündung PW	1.00	pcs
40	053331	de: Kabel 230V Versorgung FU`s + FA2 PW	1.00	pcs
50	053328	de: Kabel Ascheaustragung PW	1.00	pcs
60	054299	de: Kabel Ascherostschieber PW	1.00	pcs
70	054300	de: Kabel Glutbettschieber PW	1.00	pcs
80	053330	de: Kabel Heizflächenreinigung PW	1.00	pcs
90	053318	de: Kabel LON Elektrikeranschluß PW	1.00	pcs
100	053332	de: Kabel LON FA2 + STB PW	1.00	pcs
130	053385	de: Kabel ModBUS Steigschnecke PW	1.00	pcs
110	053335	de: Kabel Motor Ascheschieber PW	1.00	pcs
120	054306	de: Kabel Motor Glutbettschieber PW	1.00	pcs
140	053339	de: Kabel Netz und Heizungsnotschalter PW	1.00	pcs
150	053322	de: Kabel Saugzuggebläse PW	1.00	pcs
160	053323	de: Kabel Sekundärfluftklappe und Schalter Überfüllung PW	1.00	pcs
170	053324	de: Kabel Sekundärzündung PW	1.00	pcs
180	054016	de: Kabel Türschalter kpl. PW	1.00	pcs
190	053338	de: Kabel Versorgung ModBUS FU`s+FA2 PW	1.00	pcs

Control panel (A000160)

Item no.	Article no.	Description	Quantity	Unit
210	053984	de: Konsole Hauptschalter PW24-60	1.00	pcs
220	002053	de: Netzteil 12VDC 2,1A	1.00	pcs
230	012014	de: Platine - Relais PW	1.00	pcs
260	005075	de: Relais 16A AC 2 polig 12V DC Steuerung	1.00	pcs
300	003663	Fuse holder	1.00	pcs
250	007629	Immersion sensor PT 1000 (not illustrated)	1.00	pcs
310	502186	MES009M Immersion sensor	1.00	pcs
240	007609	PCB holder	1.00	pcs
270	005025	Power relay OMRON G7L-2A-BUB 200/240AC for PMX,BioWIN XL, BioWIN10-26,FireWIN,VarioWIN, BioWIN XL 35-60	1.00	pcs
200	009929	Terminal bar MS 8-pin 8x8mm for VarioWIN,FireWIN, BioWIN XL 35-60	1.00	pcs
320	007626	Thermocouple	1.00	pcs
330	005672	Thermostat LS1+100-6U	1.00	pcs
340	007096	Transformer for O2 sensor 18VA for LogWIN Premium 180-505	1.00	pcs
360	006833	Wago terminal block 261; 4-pin "12V GND"	1.00	pcs
350	006834	Wago terminal block 261; 4-pin "safety 1-4"	1.00	pcs
370	007656	Wago terminal block 261; 6-pin	1.00	pcs

Heating surface cleaning (A000157)

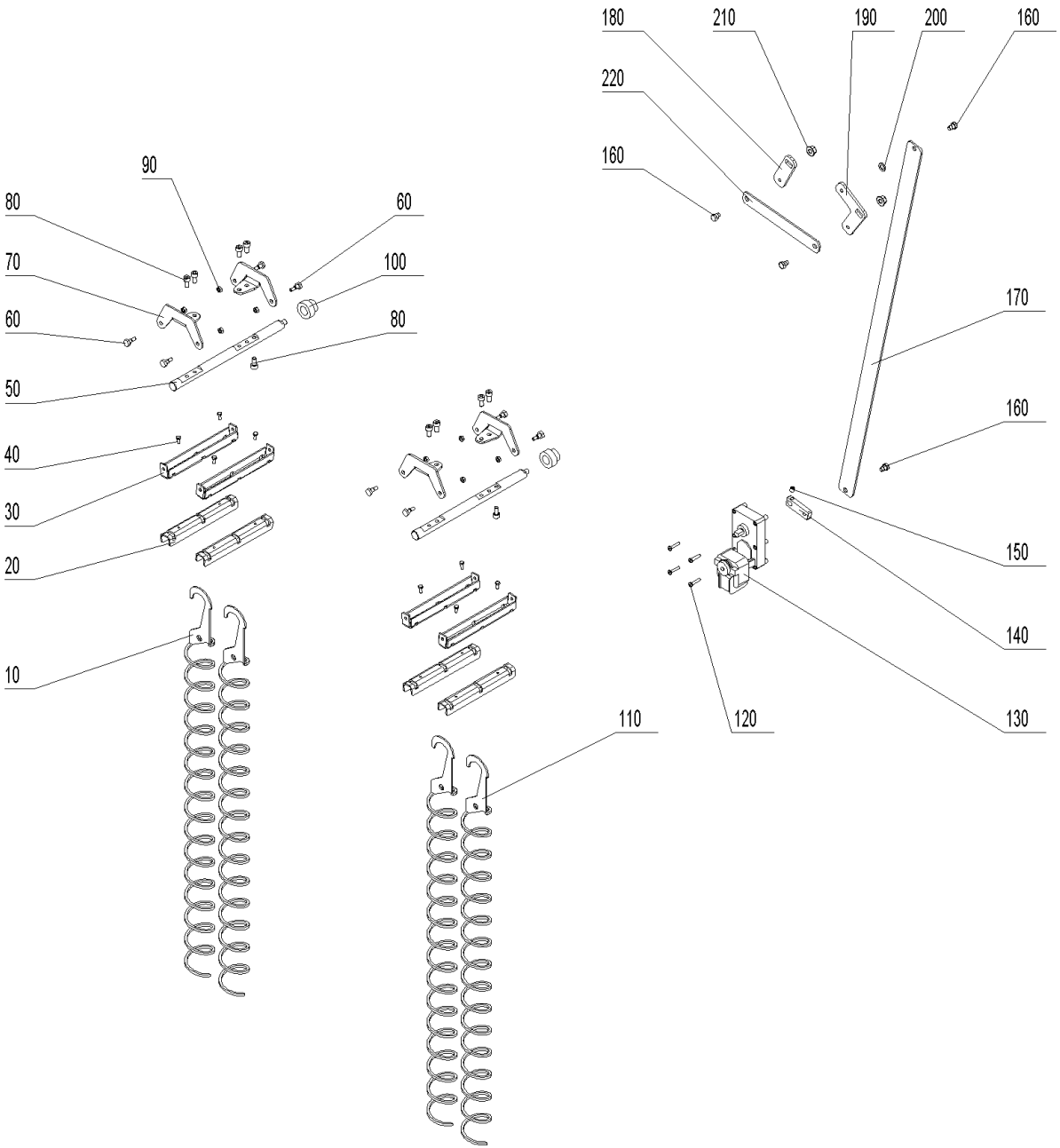

Heating surface cleaning (A000157)

Item no.	Article no.	Description	Quantity	Unit
20	047065	Bottom cleaning profile for BioWIN XL 35-60	4.00	pcs
160	012502	Collar screw	4.00	pcs
120	016837	Cylinder screw M5x25 ISO 7045	4.00	pcs
180	053281	de: Achsenhebel links HFR PW24-60	1.00	pcs
190	053280	de: Achsenhebel rechts HFR PW24-60	1.00	pcs
70	052738	de: Lagerarm für Heizflächenreinigung PW24-60	4.00	pcs
110	052768	de: Reinigungsschnecke links PW40-60	6.00	pcs
10	053981	de: Reinigungsschnecke rechts PW24-60	6.00	pcs
140	053282	de: Rüttelhebel Motor HFR PW24-60	1.00	pcs
200	018031	de: Scheibe ISO 7092 - 10 - blank	1.00	pcs
220	052781	de: Verbinder Rüttelachse HFR PW24-60	1.00	pcs
170	053284	de: Verbindung Heizflächenreinigung PW24-60	1.00	pcs
50	052737	de: Welle für Heizflächenreinigung PW24-60	2.00	pcs
80	053102	de: Zylinderschraube m. Innensechskant ISO 4762 - M 8 x 16 - A4 (DIN 912)	10.00	pcs
100	047416	Heating surface cleaning bearing for BioWIN XL 35-60	2.00	pcs
210	016567	Hexagon nut M10 with flange and gearing (not illustrated)	2.00	pcs
40	017020	Hexagon screw Niro DIN 933 - M5x12 - A2 for HMX, FireWIN, VarioWIN	8.00	pcs
130	044665	Motor	1.00	pcs
90	016596	Nut DIN 934 - M6 - A2 for VarioWIN, FireWIN, BioWIN10-26, BioWIN XL 35-60	8.00	pcs
60	006756	Screw M6 for heating surface cleaning for PMX,BioWIN 10-26,FireWIN, BioWIN XL 35-60, LogWIN Premium 180-505	8.00	pcs
150	033112	Setscrew M8x10 DIN916	1.00	pcs
30	047064	Top cleaning profile for BioWIN XL 35-60	4.00	pcs

Ignition (A000158)

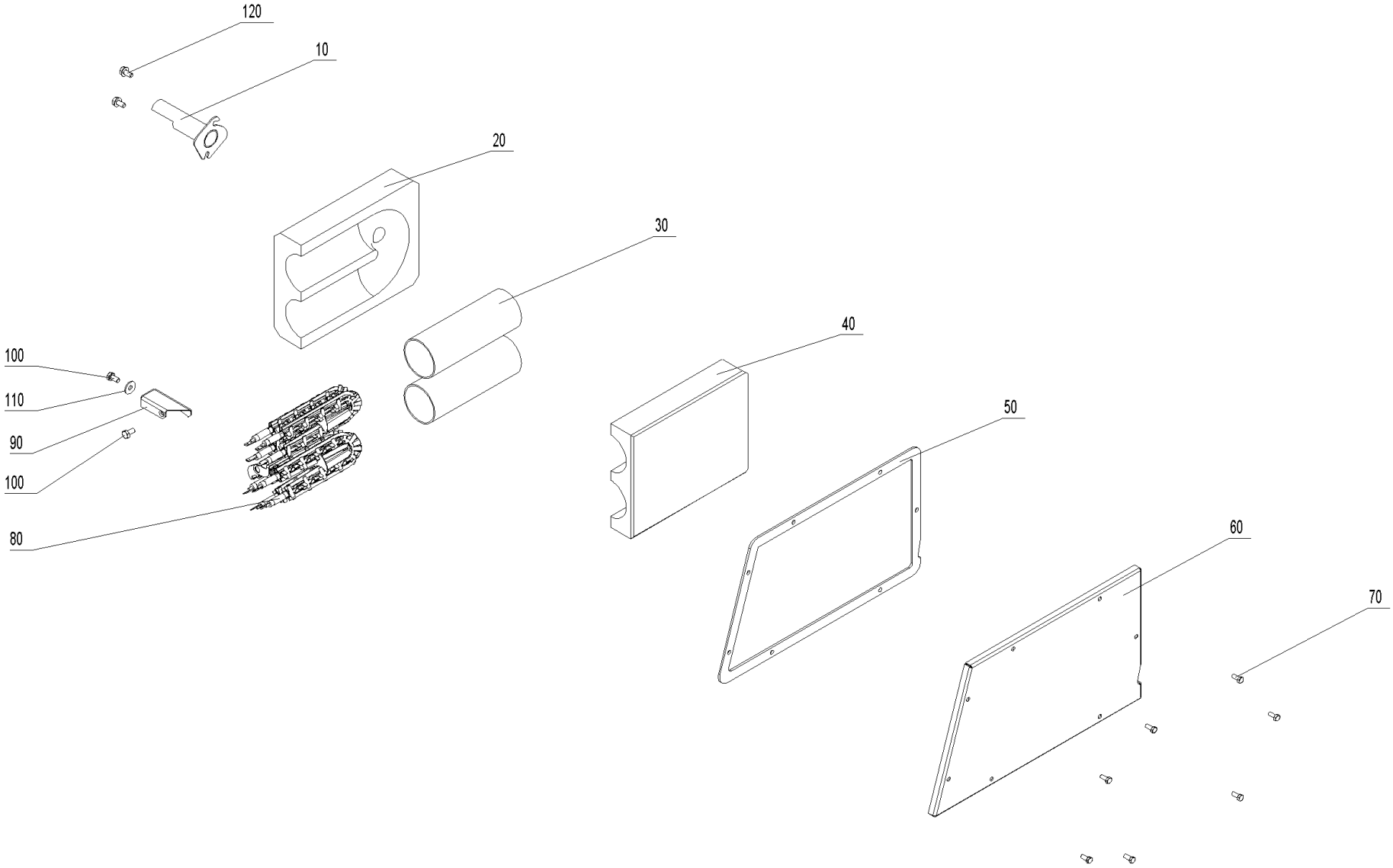

Ignition (A000158)

Item no.	Article no.	Description	Quantity	Unit
60	052717	de: Abdeckung Zündung PW24-60	1.00	pcs
90	052387	de: Anschlag Zündung PW24-60	1.00	pcs
50	052993	de: Dichtung Zündung PW24-60	1.00	pcs
20	052713	de: Isolierstein unten Zündung PW24-60	1.00	pcs
10	052716	de: Zündrohr kpl. PW24/30	1.00	pcs
10	052766	de: Zündrohr kpl. PW40-60	1.00	pcs
110	031753	Disc 6 ISO 7093	1.00	pcs
100	017051	Hexagon screw M6x12 DIN 933 (not illustrated)	2.00	pcs
120	031549	Hexagon screw M6x12 DIN 7500	2.00	pcs
70	017020	Hexagon screw Niro DIN 933 - M5x12 - A2 for HMX, FireWIN, VarioWIN	7.00	pcs
80	055201	Ignition element BioWIN10-26, FireWIN from lot 15, VarioWIN from lot 15 BioWIN XL, LWK	1.00	pcs
30	050489	Ignition tube LWP18-50, LWK	2.00	pcs
40	007484	Insulating stone top for automatic ignition LWP18-50, LWK	1.00	pcs

PuroWIN 72 (A000226_1)

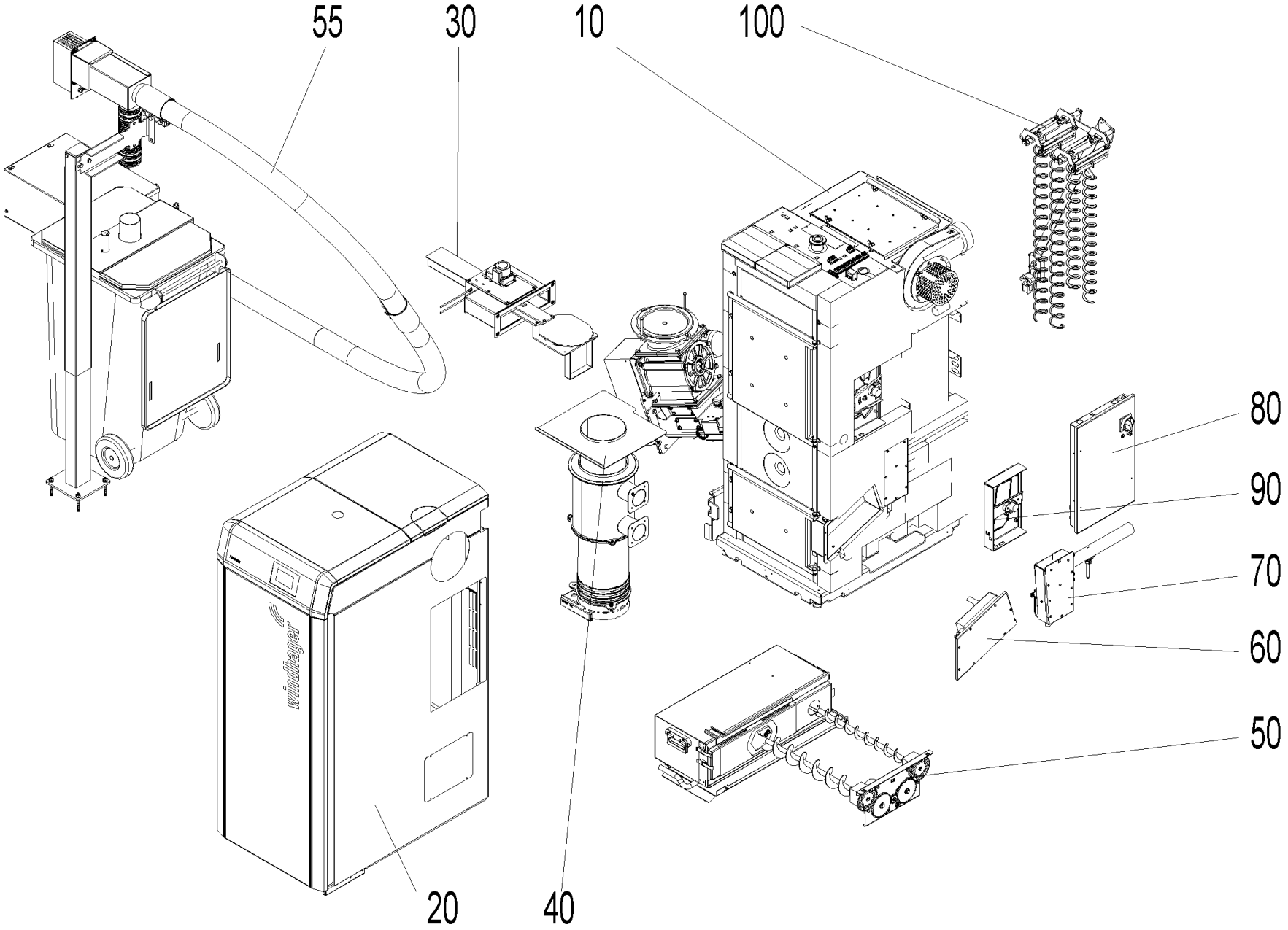

PuroWIN 72 (A000226_1)

Pos.	Artikelnr.	Bezeichnung	Menge	Einheit
10	A000227	Kessel	1.00	Stk
20	A000228	Verkleidung	1.00	Stk
30	A000229	Entaschung	1.00	Stk
40	A000230	Brennkammer	1.00	Stk
50	A000154	Ascheaustragung	1.00	Stk
55	A000250	Ascheaustragung in Tonne	1.00	Stk
60	A000158	Zündung	1.00	Stk
70	A000159	Luftregelung PL	1.00	Stk
80	A000160	Schaltfeld	1.00	Stk
90	A000231	Luftregelung SL/TL	1.00	Stk
100	A000232	Heizflächenreinigung	1.00	Stk

Kessel (A000227)

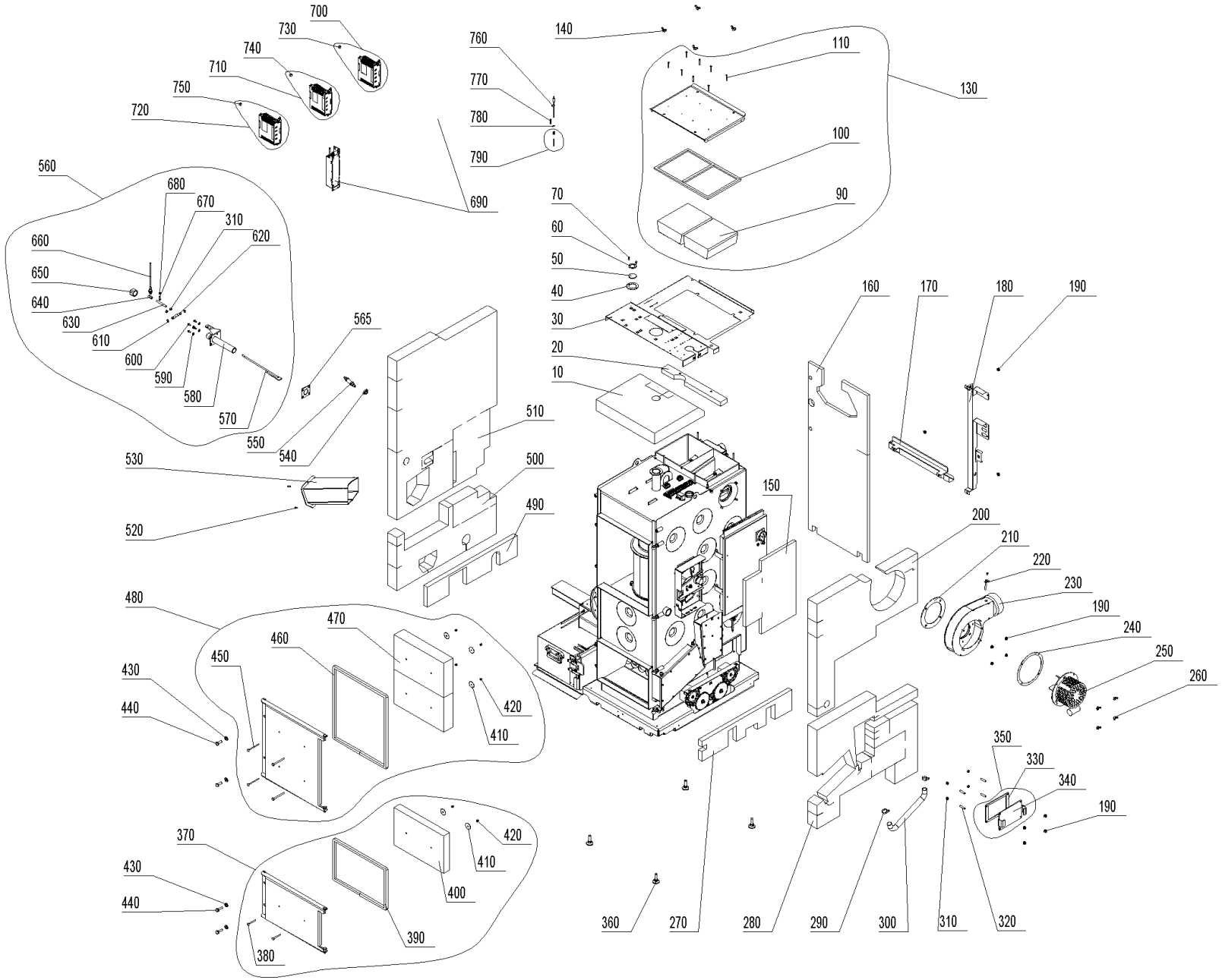

Kessel (A000227)

Pos.	Artikelnr.	Bezeichnung	Menge	Einheit
10	053835	Isolierung oben PW72-103	1.00	Stk
20	053836	Isolierung oben hinten PW72-103	1.00	Stk
30	053837	Isolierabdeckung oben PW72-103	1.00	Stk
40	051712	Dichtung Schauloch PW24-103	1.00	Stk
50	000307	Glasscheibe Ø 45/4 PW24-103	1.00	Stk
60	087300	Rosette Schauloch PW24-103	1.00	Stk
70	031545	Gewindefurchende Sechskantschraube DIN 7500 - M5x12, verzinkt	2.00	Stk
90	053657	Isolierstein NHF rechts PW72-103	1.00	Stk
90	053656	Isolierstein NHF links PW72-103	1.00	Stk
100	053658	Dichtschnur Reinigungsdeckel PW72-103	1.00	Stk
110	016719	Linsen-Bohrschraube DIN 7504N - 4,2x38	8.00	Stk
130	055811	Reinigungsdeckel mont. PW72-103	1.00	Stk
140	019414	Flügelmutter ähnl. DIN 315 - M8 - St - verzinkt	4.00	Stk
150	053839	Isolierung Schaltfeld PW72-103	1.00	Stk
160	053846	Isolierung hinten oben PW72-103	1.00	Stk
170	052996	Kabelschacht unten PW24-103	1.00	Stk
180	052704	Kabelschacht senkrecht PW24-103	1.00	Stk
190	016553	Sperrzahnmutter M8 verzinkt	11.00	Stk
200	053844	Isolierung rechts oben PW72-103	1.00	Stk
210	054947	Sekundärluftdichtung mitte 1	1.00	Stk
220	041498	Schutzrohr Rauchgasfühler	1.00	Stk
230	055812	Gebläsekasten PW72-103	1.00	Stk

Kessel (A000227)

Pos.	Artikelnr.	Bezeichnung	Menge	Einheit
250	006241	Motor Saugzuggebläse PW72-103	1.00	Stk
260	019410	Flügelmutter DIN315 - M6	6.00	Stk
270	053840	Isolierung rechts innen PW72-103	1.00	Stk
280	053845	Isolierung rechts unten PW72-103	1.00	Stk
290	029424	IDEAL-Schlauchklemmen 20-32mm	2.00	Stk
300	052989	Schlauch Silikon SG1M PW24-103	1.00	Stk
310	031154	Mutter DIN934 - M8 - A4	4.00	Stk
320	016163	Gewindestift DIN913 - M8x40-A2	4.00	Stk
330	047190	Dichtung Abdeckblech PW24-103	1.00	Stk
340	047188	Abdeckblech PW24-103	1.00	Stk
350	047991	Deckel für Nachheizflächen unten BW XL, PW24-103	1.00	Stk
360	009994	Stellfuß	4.00	Stk
370	055813	Aschetür mont. PW72-103	1.00	Stk
380	016190	Flachrundschraube M6x90	2.00	Stk
390	053672	Dichtschnur Aschetür PW72-103	1.00	Stk
400	053831	Isolierstein Aschetür PW72-103	1.00	Stk
410	016191	Karosserie Scheibe M6 A2 6,4x40x1,5	6.00	Stk
420	016192	Hutmutter hohe Form DIN1587 - M6 A2	6.00	Stk
430	017183	U-Scheibe DIN125 - M12	4.00	Stk
440	017865	Sechskantschraube M12x35 - 8.8	4.00	Stk
450	016190	Flachrundschraube M6x90	4.00	Stk
460	053660	Dichtschnur Heiztür PW72-103	1.00	Stk

Kessel (A000227)

Pos.	Artikelnr.	Bezeichnung	Menge	Einheit
470	053661	Isolierstein Heiztür PW72-103	2.00	Stk
480	055814	Heiztür mont. PW72-103	1.00	Stk
490	053841	Isolierung links innen PW72-103	1.00	Stk
500	053843	Isolierung links unten PW72-103	1.00	Stk
510	053842	Isolierung links PW72-103	1.00	Stk
520	020095	Linsensenkschraube TT, DIN 7500ME M5x16 verz.	2.00	Stk
530	053674	Schneckenrohr kpl. PW72-103	1.00	Stk
540	007094	Isolierring Lambdasonde	1.00	Stk
550	051646	Lambdasonde NGK inkl. Kabel	1.00	Stk
560	053680	Level Control montiert PW72-103	1.00	Stk
565	053551	Dichtung Deckel Entaschung PW72-103	1.00	Stk
570	053683	Fühler kpl. PW72-103	1.00	Stk
580	052734	Level Controll Rohr kpl. PW24/30, PW72-103	1.00	Stk
590	020540	U-Scheibe DIN 134 - M6	4.00	Stk
600	017051	Sechskantschraube DIN 933 - M6x12 - 8.8	4.00	Stk
610	052174	Sicherungsring DIN 471 - 12 X 1	2.00	Stk
620	052099	Level Controll Achse PW24-103	1.00	Stk
630	017032	Gewindebolzen M8x80 verzinkt	1.00	Stk
640	048554	Verlängerungsmutter M8	1.00	Stk
650	008850	Kappe Nr. 300, 1" schwarz	1.00	Stk
660	007657	Näherungsschalter M12 induktiv PW24-103	1.00	Stk
670	015471	Sechskantschraube DIN 933 - M6x20 - 8.8 - verzinkt	1.00	Stk

Kessel (A000227)

Pos.	Artikelnr.	Bezeichnung	Menge	Einheit
680	016594	Mutter DIN 934 - M6 - 8 - verzinkt	1.00	Stk
690	054185	Filter zu FU, 0,75kW, 1-Phase	2.00	Stk
700	055837	ET-SET: FU mit Eprom TANK 100 zu Zuführung pneumatisch PW72-103 zu Motor Lenze	1.00	Stk
710	054847	ET-SET: FU mit Eprom RAS zu Zuführung direkt PW24-103 zu Motor Lenze	1.00	Stk
720	054849	ET-SET: FU mit Eprom TANK zu Zuführung pneumatisch PuroWIN	1.00	Stk
730	054197	Eprom auf STOK program. zu FU PuroWIN Zuführung direkt / pneumatisch zu Motor Lenze	1.00	Stk
740	054196	Eprom RAS program. zu FU PuroWIN Zuführung direkt zu Motor Lenze	1.00	Stk
750	055838	Eprom auf TANK 100 program. zu FU PuroWIN 72-103 Zuführung pneumatisch zu Motor Lenze	1.00	Stk
760	007626	Thermoelement 2AB NM30/110 mm TI/DI 2AB25 2,5 (Brennkammer- bzw. Thermocontrollfühler)	1.00	Stk
770	050647	Feder Brennkammer-Fühler	1.00	Stk
780	031274	Öse M6	1.00	Stk
790	051069	Schutzrohr BK-Fühler kpl.	1.00	Stk
800	009185	Netzfilter FN2020-10-06 PW24-103	1.00	Stk
810	016594	Mutter DIN 934 - M6 - 8 - verzinkt	1.00	Stk

Verkleidung (A000228)

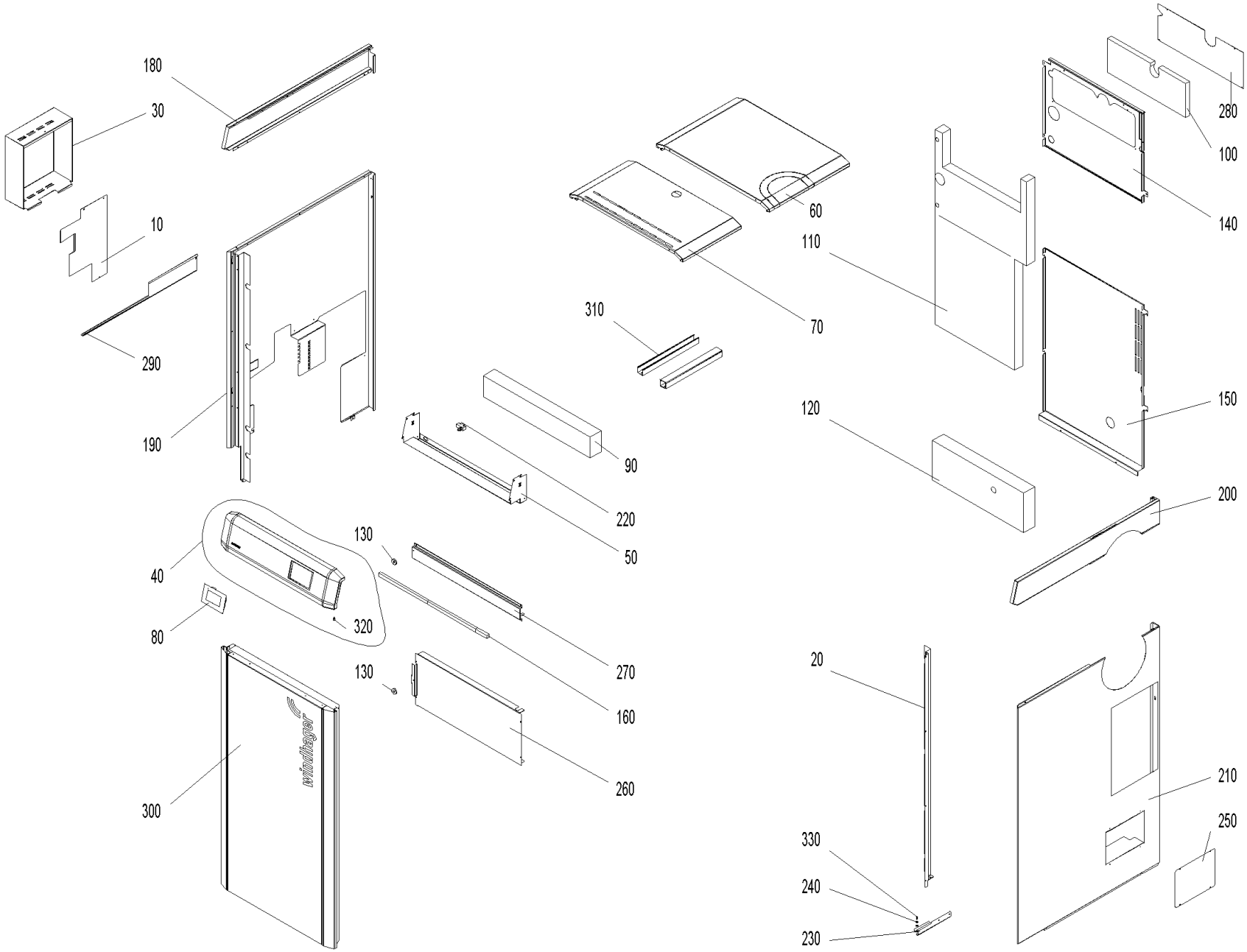

Verkleidung (A000228)

Pos.	Artikelnr.	Bezeichnung	Menge	Einheit
10	054622	Abdeckung Seitenwand links unten PW72-103	1.00	Stk
20	054602	Abdeckung Seitenwand rechts PW72-103	1.00	Stk
30	053812	Abdeckung Steckerkonsole PW24-103	1.00	Stk
40	055397	Bedienfeld PW72-103	1.00	Stk
50	054624	Befestigungsblech Verkleidung PW72-103	1.00	Stk
60	054619	Deckel hinten PW72-103	1.00	Stk
70	054620	Deckel vorne PW72-103	1.00	Stk
80	001009	INF8 MES INFINITY InfoWIN Touch BW2T, LWPT, PW24-103, BW2P, AEHM inkl. Masterfunktion und Webserver	1.00	Stk
90	011175	Isolierung Bedienfeld PW72-103	1.00	Stk
100	011174	Isolierung Heizflächenreinigung oben PW72-103	1.00	Stk
110	011173	Isolierung Rückwand oben PW72-103	1.00	Stk
120	011172	Isolierung Rückwand unten PW72-103	1.00	Stk
130	001761	Magnet Ø31 gummiummantelt	1.00	Stk
140	054610	Rückwand oben PW72-103	1.00	Stk
150	054609	Rückwand unten PW72-103	1.00	Stk
160	009623	Schallisolierung Verkleidung PW72-103	3.00	Stk
170	016489	Schnappmutter 0536/17 vz.	1.00	Stk
180	054617	Seitenwand links oben PW72-103	1.00	Stk
190	055398	Seitenwand links PW72-103	1.00	Stk
200	054618	Seitenwand rechts oben PW72-103	1.00	Stk
210	054616	Seitenwand rechts unten PW72-103	1.00	Stk
210	016489	Schnappmutter 0536/17 vz.	7.00	Stk

Verkleidung (A000228)

Pos.	Artikelnr.	Bezeichnung	Menge	Einheit
220	007128	Türschalter (Mikroschalter) LWP18-50, BWXL 35-60, LWK, LWPT, PW	1.00	Stk
230	054164	Türangel unten PW72-103	1.00	Stk
240	018309	U-Scheibe DIN 134 - M5	1.00	Stk
250	053814	Verkleidung Abdeckung Reinigungsdeckel PW24-103	1.00	Stk
260	054606	Verkleidung Abdeckung vorne mitte PW72-103	1.00	Stk
270	054608	Verkleidung Abdeckung vorne oben PW72-103	1.00	Stk
280	054611	Verkleidung Deckel Heizflächenreinigung oben PW72-103	1.00	Stk
290	054625	Verkleidung Schiene links PW72-103	1.00	Stk
300	055396	Verkleidung Tür kpl. PW72-103	1.00	Stk
310	050978	Wand und Deckenkanal BW2, PW24-103	1.00	M
320	015507	Zapfenschraube M5x18	1.00	Stk
330	033092	Zapfenschrauben DIN927 - M5X5	1.00	Stk

Entaschung (A000229)

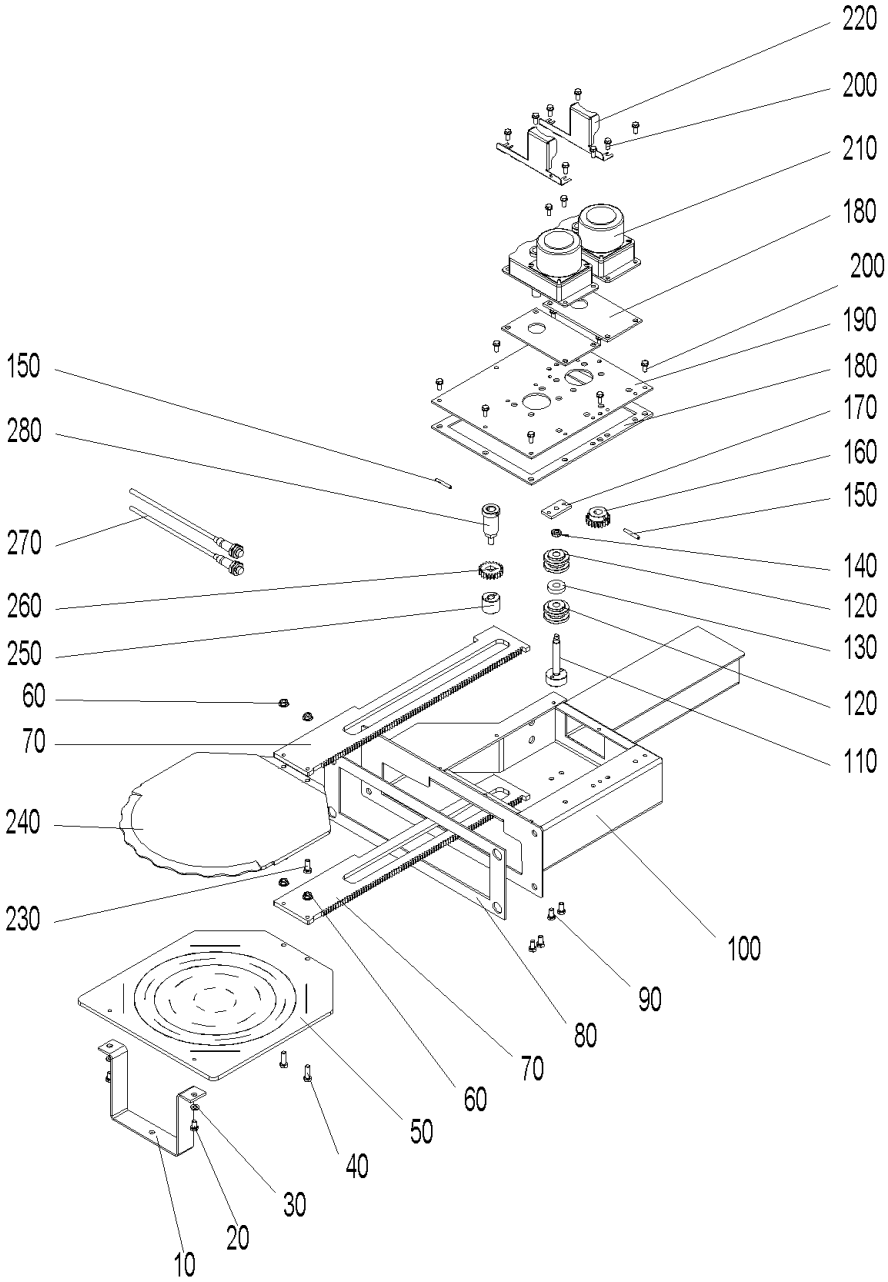

Entaschung (A000229)

Pos.	Artikelnr.	Bezeichnung	Menge	Einheit
10	053553	Ascheverdrängblech PW72-103	1.00	Stk
20	015026	Sechskantschraube DIN 933 - M6x10 - 8.8 - verzinkt	2.00	Stk
30	031713	Scheibe ISO 7089 - 6 - A2	2.00	Stk
40	015471	Sechskantschraube DIN 933 - M6x20 - 8.8 - verzinkt	2.00	Stk
50	052163	Ascheschieber PW40-103	1.00	Stk
60	016566	Sperrzahnmutter M6 verzinkt	4.00	Stk
70	053667	Zahnstange oben PW72-103	2.00	Stk
80	052152	Dichtung Fl. Entaschung PW24-103	1.00	Stk
90	017051	Sechskantschraube DIN 933 - M6x12 - 8.8	4.00	Stk
100	053531	Konsole Entaschung PW72-103	1.00	Stk
110	052153	Welle Lagerung PW24-103	1.00	Stk
120	007125	Lagerung Rüttelantrieb	4.00	Stk
130	052149	Distanzscheibe PW24-103	1.00	Stk
140	016659	Mutter DIN439 - M 8	1.00	Stk
150	018665	Spiral Spannstift DIN 7344 - 4x30	2.00	Stk
160	052154	Stirnrad PW24-103	1.00	Stk
170	052150	Lagerungsblech PW24-103	1.00	Stk
180	053551	Dichtung Deckel Entaschung PW72-103	1.00	Stk
190	053549	Deckel oben Entaschung PW72-103	1.00	Stk
200	031545	Gewindefurchende Sechskantschraube DIN 7500 - M5x12, verzinkt	18.00	Stk
210	053641	Motor - Entaschung PW24-103	2.00	Stk
220	054167	Kabelabdeckung Motor Entaschung PW24-103	2.00	Stk

Entaschung (A000229)

Pos.	Artikelnr.	Bezeichnung	Menge	Einheit
230	024768	Sechskantschraube DIN 933 - M6x16 - A4 - besch. mit Gleitlack bc2571 (bis 600°C)	2.00	Stk
240	055453	Glutbettschieber PW72-103	1.00	Stk
250	054944	Lagerung Welle PW72-103	1.00	Stk
260	054946	Stirnrad M1,5 Z21 PW72-103	1.00	Stk
270	007657	Näherungsschalter M12 induktiv PW24-103	2.00	Stk
280	054943	Antriebswelle PW72-103	1.00	Stk

Brennkammer (A000230)

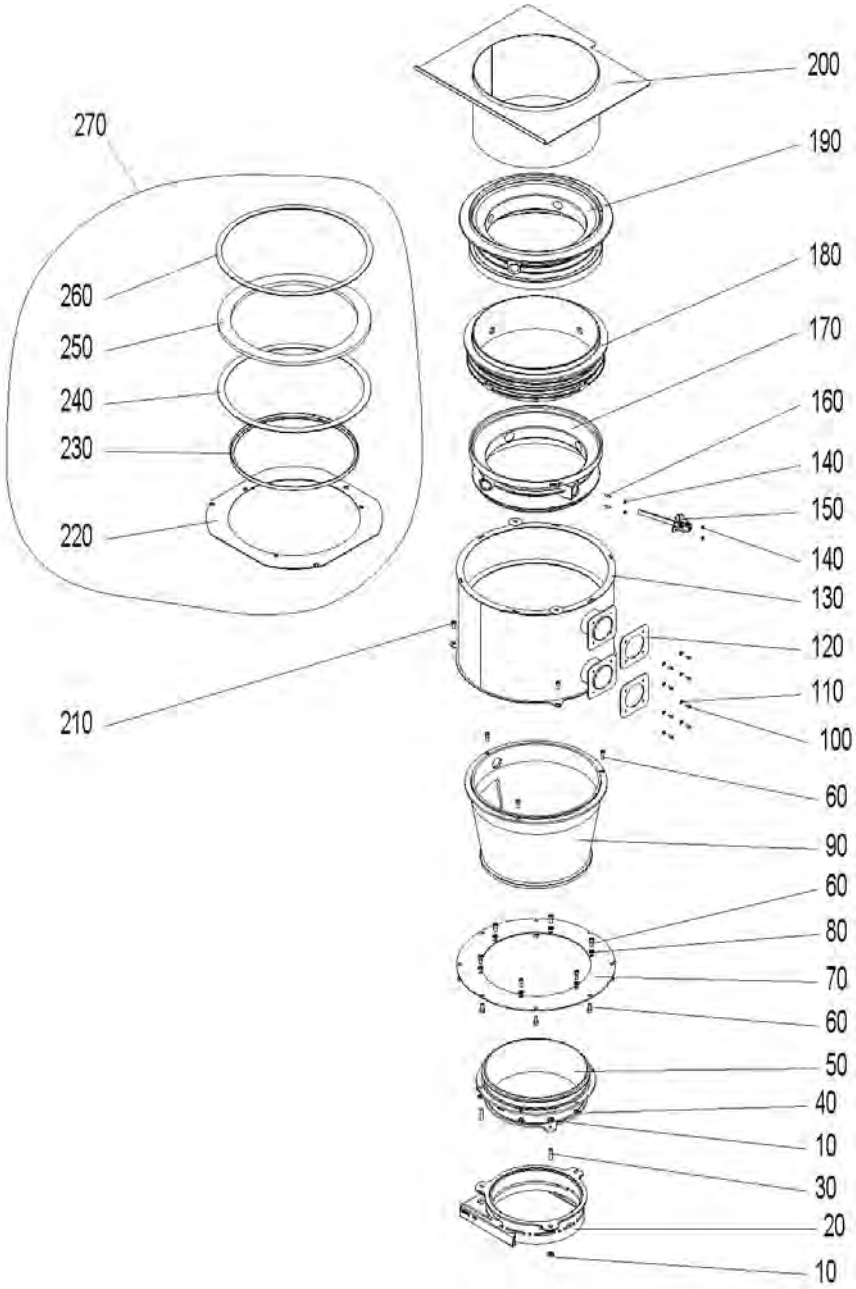

Brennkammer (A000230)

Pos.	Artikelnr.	Bezeichnung	Menge	Einheit
10	031155	Mutter DIN 934 - M10 - A4	6.00	Stk
20	052866	Konus D270 PW40-103	1.00	Stk
30	052061	Gewindestift M10x40 A2	3.00	Stk
40	031154	Mutter DIN934 - M8 - A4	6.00	Stk
50	054939	Vergaserrohr unten PW72-103	1.00	Stk
60	053834	Zylinderschraube m. Innensechskant M8 x 20 - A4	17.00	Stk
70	054942	Befestigungsblech Vergaserrohr PW72-103	1.00	Stk
80	024779	U-Scheibe ISO 7089 - 8 - A2	6.00	Stk
90	054938	Vergaserrohr PW72-103	1.00	Stk
100	017020	Sechskantschraube DIN 933 - M5x12 - A2	8.00	Stk
110	018309	U-Scheibe DIN 134 - M5	8.00	Stk
120	052088	Brennerdichtung rechts PW24-103	2.00	Stk
130	053506	Brenner kpl. PW72-103	1.00	Stk
140	017035	Mutter DIN 934 - M5 - A2	4.00	Stk
150	054951	Sekundärluftzündung kpl. PW72-103	1.00	Stk
160	054158	Gewindestifte mit ISK und Kegelkuppe ISO4026/DIN 913 M 5X 20 Edelstahl A2	2.00	Stk
170	053514	Sekundärluftdüse unten PW72-103	1.00	Stk
180	053515	Sekundärluftdüse oben PW72-103	1.00	Stk
190	053516	Tertiärluftdüse PW72-103	1.00	Stk
200	053517	Vergaserrohr oben PW72-103	1.00	Stk
210	016773	Zylinderschraube m. Innensechskant ISO 4762 - M 8 x 16 - 8.8 (DIN 912)	3.00	Stk
220	053498	Dichtung Brennerflansch PW72-103	1.00	Stk

Brennkammer (A000230)

Pos.	Artikelnr.	Bezeichnung	Menge	Einheit
230	054953	Sekundärluftdichtung mitte PW72-103	1.00	Stk
240	053524	Dichtung Sekundärluft PW72-103	1.00	Stk
250	053521	Dichtung Sekundärluft /Tertiärluft PW72-103	1.00	Stk
260	053523	Tertiärluftdichtung PW72-103	1.00	Stk
270	055810	Dichtungsset PW72-103	1.00	Stk

Ascheaustragung (A000154)

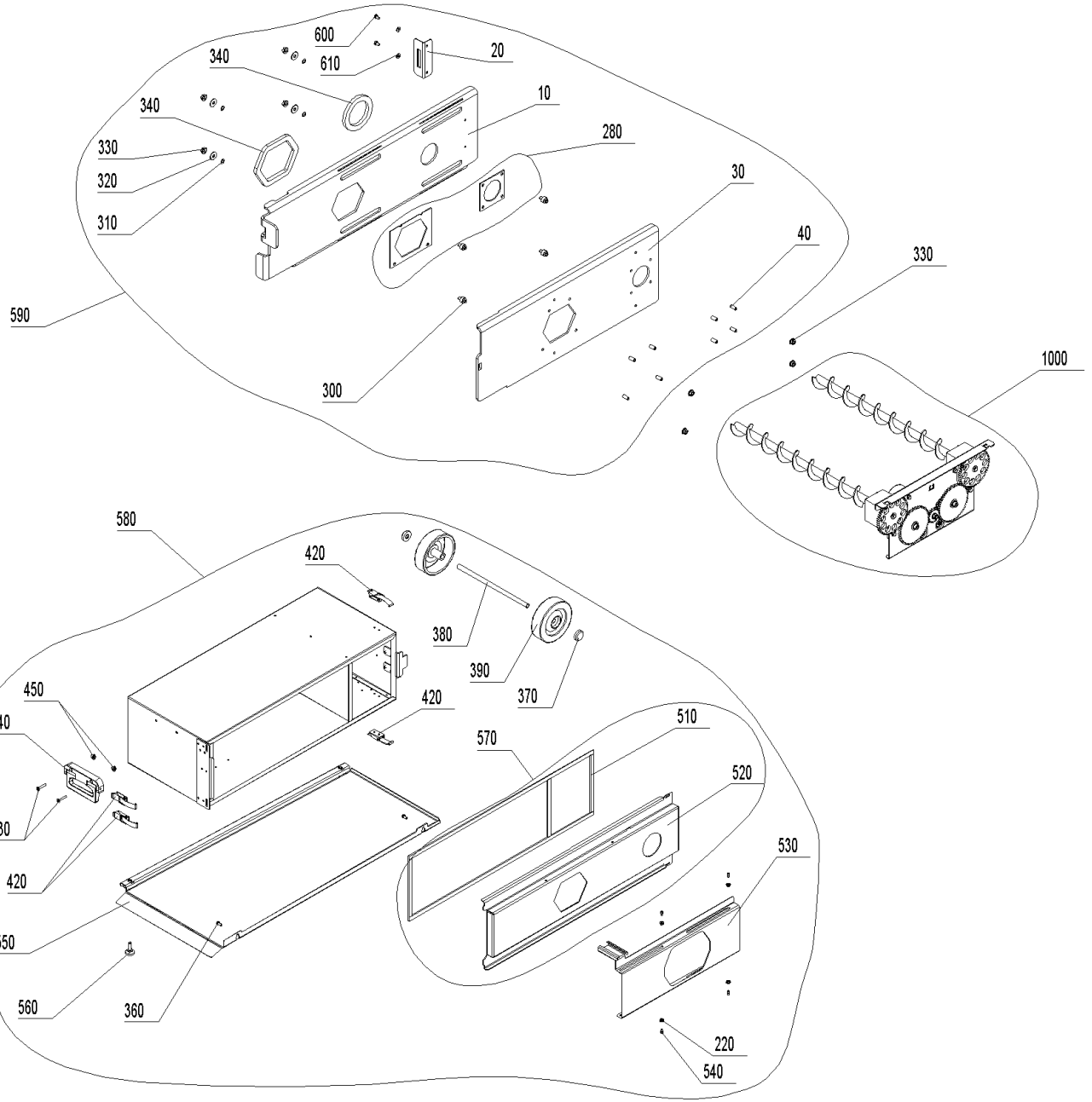

Ascheaustragung (A000154)

Pos.	Artikelnr.	Bezeichnung	Menge	Einheit
10	055157	Schieber Ascheboxflansch PW24-103	1.00	Stk
20	055158	Arretierung Aschebox PW24-103	1.00	Stk
30	055156	Flansch Aschebox PW24-103	1.00	Stk
40	033536	Gewindestift M8 x 20 VZ, DIN 913	8.00	Stk
220	016565	Sperrzahnmutter M5 verzinkt	4.00	Stk
280	055089	Dichtung Ascheboxflansch vorne und hinten PW24-103	1.00	Stk
300	055159	Bolzen Ascheschieber PW24-103	4.00	Stk
310	055132	Passscheibe D14	16.00	Stk
320	031756	U-Scheibe ISO 7093	4.00	Stk
330	016553	Sperrzahnmutter M8 verzinkt	4.00	Stk
340	055241	Silikon Vierkantprofil 15x10 mm,	0.78	M
360	031545	Gewindefurchende Sechskantschraube DIN 7500 - M5x12, verzinkt	2.00	Stk
370	006889	Sicherungsscheibe Ø12 mit Kunststoffkappe	2.00	Stk
380	051379	Achse Aschebox BW2, BW2T, BW2P	1.00	Stk
390	006888	Rad AG 125-12 Vollgummi Aschebehälter	2.00	Stk
420	009546	Spannverschluss	4.00	Stk
430	054573	Senkschraube M6x30 DIN965	2.00	Stk
440	054570	Griff PW24-103	1.00	Stk
450	016566	Sperrzahnmutter M6 verzinkt	2.00	Stk
510	054571	Dichtung Aschelade PW24-103	1.00	Stk
520	056206	Aschebox De. kpl. RAL 7012 FS PW	1.00	Stk
530	054494	Aschebox Verschluß PW24-103	1.00	Stk

Ascheaustragung (A000154)

Pos.	Artikelnr.	Bezeichnung	Menge	Einheit
540	033092	Zapfenschrauben DIN927 - M5X5	4.00	Stk
550	056207	Aschebox Sockel RAL 7012 FS PW	1.00	Stk
560	055141	Stellfuß PW24-103	2.00	Stk
570	054576	Aschebox Deckel kpl. PW24-103	1.00	Stk
580	052700	PWZ050 Aschebox zu Hackgut-Vergaser Abmessungen ohne Griff u. ohne Räder: BxHxT ca. 342x225x744mm Nutzvolumen: 50L Abmessungen in	1.00	Stk
590	055218	Ascheschieber kpl. PW24-103	1.00	Stk
600	015026	Sechskantschraube DIN 933 - M6x10 - 8.8 - verzinkt	2.00	Stk
610	020540	U-Scheibe DIN 134 - M6	2.00	Stk
1000	A000257	Schnecken m. Antrieb	1.00	Stk

Schnecken m. Antrieb (A000257)

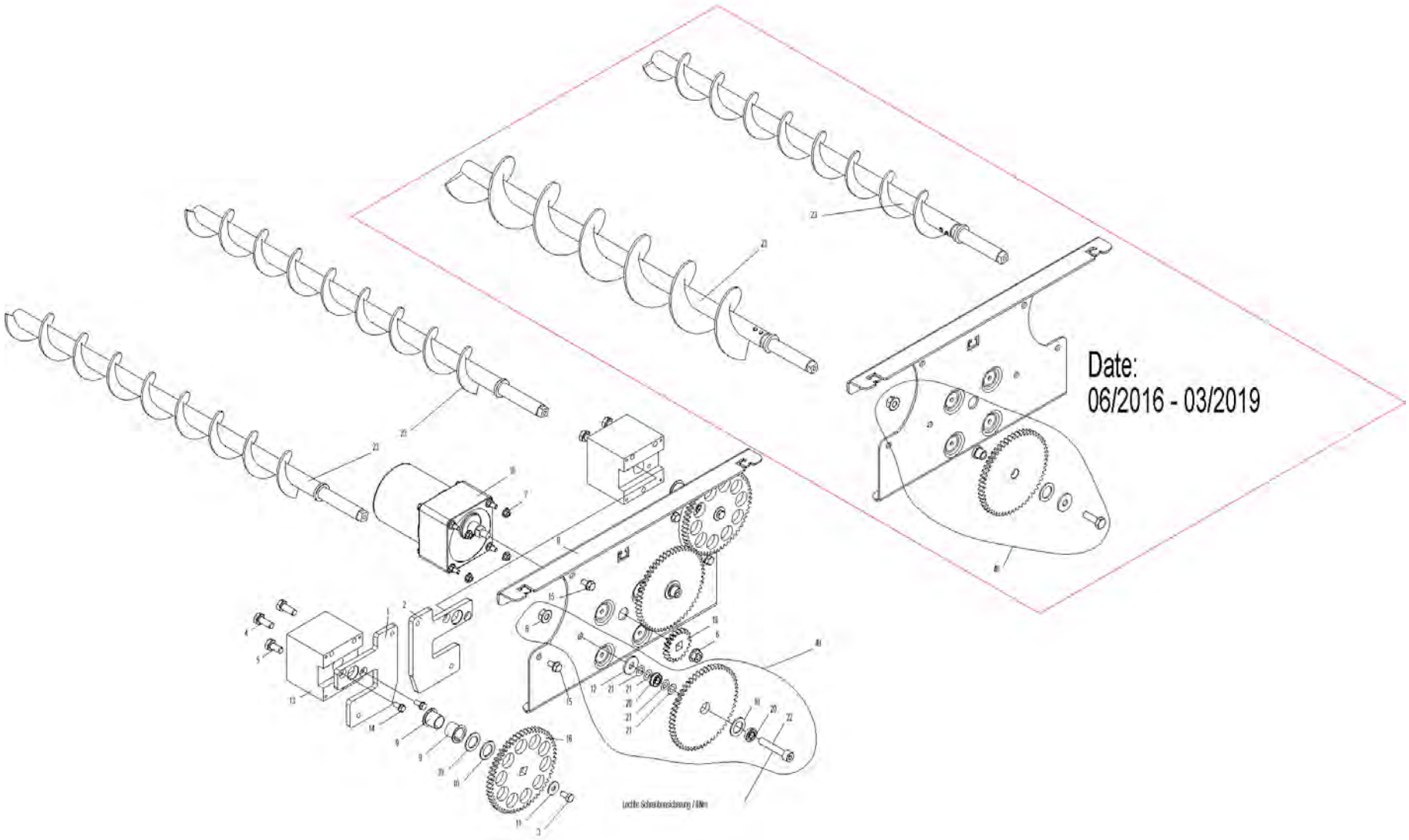

Schnecken m. Antrieb (A000257)

Pos.	Artikelnr.	Bezeichnung	Menge	Einheit
1	051169	Flanschplatte links AAT PW24-103	1.00	Stk
2	052371	Flanschplatte rechts AAT PW24-103	1.00	Stk
3	017051	Sechskantschraube DIN 933 - M6x12 - 8.8	2.00	Stk
4	017086	Sechskantschraube DIN 933 - M8x20 - 8.8 - verzinkt	4.00	Stk
5	016721	Sechskantschraube DIN 933 - M8x16 - 8.8, schwarz	1.00	Stk
6	016553	Sperrzahnmutter M8 verzinkt	3.00	Stk
7	016565	Sperrzahnmutter M5 verzinkt	4.00	Stk
8	052197	Konsole AAT PW24-103	1.00	Stk
9	012508	Gleitlager-Bundbuchse	4.00	Stk
10	047545	Scheibe D25/16,2x1,5 verz.	6.00	Stk
11	031753	U-Scheibe DIN125 - M6 - A2	2.00	Stk
12	031755	U-Scheibe DIN 9021 - M8	2.00	Stk
13	047920	Flansch für Ascheaustragung BW35-60, PW24-103	2.00	Stk
14	031545	Gewindefurchende Sechskantschraube DIN 7500 - M5x12, verzinkt	4.00	Stk
15	031549	Sechskantschraube DIN 7500 - M6x12	4.00	Stk
16	052196	Stirnrad Schnecke PW24-103	2.00	Stk
18	050901	Schneckenmotor SPG 4,8 U/min	1.00	Stk
19	053412	Stirnrad Motor geh. M2 Z20	1.00	Stk
20	055728	Rillenkugellager - mit Bund F688 ZZ-8x16x5	4.00	Stk
21	055132	Passscheibe D14	8.00	Stk
22	018172	Zylinderschraube m. Innensechskant ISO 4762 - M 8 x 45 - 8.8 - verzinkt (DIN 912)	2.00	Stk
23	055916	Austragungsschnecke 2 PW72-103	2.00	Stk

Schnecken m. Antrieb (A000257)

Pos.	Artikelnr.	Bezeichnung	Menge	Einheit
23	055918	Austragungsschnecke 1 PW24-60	2.00	Stk
40	055945	Zwischenrad 1/2 kpl. AA PuroWIN	2.00	Stk

Ascheaustragung in Tonne (A000250)

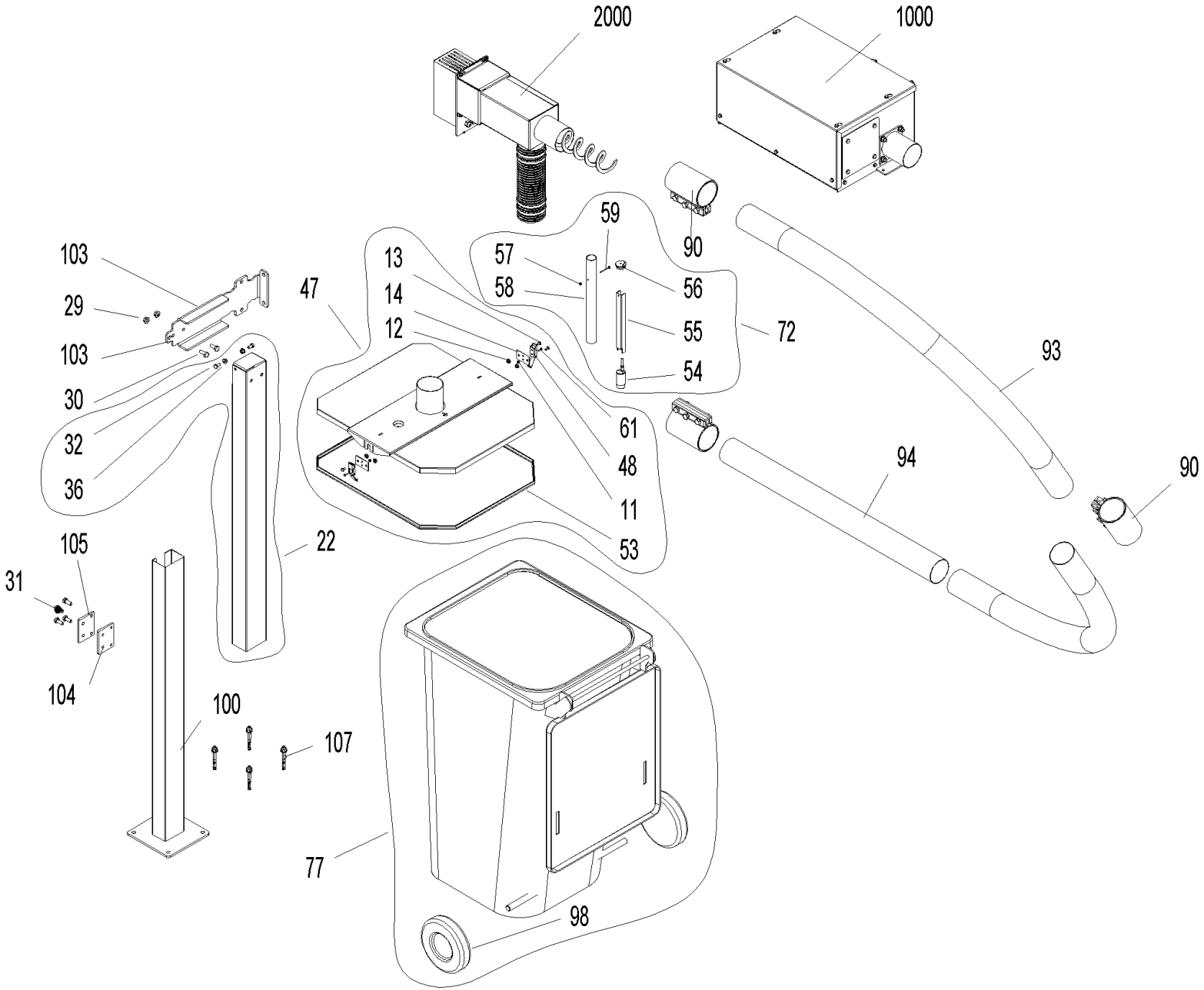

Ascheaustragung in Tonne (A000250)

Pos.	Artikelnr.	Bezeichnung	Menge	Einheit
11	016564	Sperrzahnmutter M4 verzinkt	2.00	Stk
12	016566	Sperrzahnmutter M6 verzinkt	4.00	Stk
13	015026	Sechskantschraube DIN 933 - M6x10 - 8.8 - verzinkt	4.00	Stk
14	055944	Einstellplatte De.	2.00	Stk
22	055942	Stütze oben Förderrohr	1.00	Stk
29	016567	Sperrzahnmutter M10 verzinkt	2.00	Stk
31	054526	Sechskantschraube DIN 933 - M10x25 - 8.8 - verzinkt	6.00	Stk
32	015134	Sechskantschraube DIN 933 - M8x16 - 8.8 - verzinkt	2.00	Stk
36	016553	Sperrzahnmutter M8 verzinkt	2.00	Stk
47	055510	PWZ Abdeckung Tonne zu Ascheaustragung	1.00	Stk
48	009546	Spannverschluss	2.00	Stk
53	053467	Dichtungsprofil Vorratsbehälter 200KG und Ascheaustragung in Tonne BW2, BW2T 10-33, BWL10-26, PW	1.00	Stk
54	006821	Näherungsschalter mit Anschlußkabel 2m	1.00	Stk
55	055035	Fixierung Näherungsschalter	1.00	Stk
56	051316	Stopfen GPN 300 F 242 gebohrt Ø5	1.00	Stk
57	016724	Sicherungsmutter DIN 985 - M 4 - 8 - verzinkt	1.00	Stk
58	046190	Einbringrohr Näherungsschalter PW Zuführung	1.00	Stk
59	016752	Sechskantschraube DIN 933 - M4x40 - 8.8 - verzinkt	1.00	Stk
61	055014	Sechskantschraube DIN 933 - M4x12 - 8.8 - verzinkt	2.00	Stk
72	056097	PWZ032 Überwachung Füllstand Aschetonne	1.00	Stk
77	055515	PWZ031 Aschetonne 240 Liter Stahl verzinkt (verstärkte Radausführung)	1.00	Stk
90	055513	PWZ Rohrkupplung DVK HD mit Erdungsband Nenn-Ø88,9, Baulänge 150 (EPDM-Dichtung,	3.00	Stk

Ascheaustragung in Tonne (A000250)

Pos.	Artikelnr.	Bezeichnung	Menge	Einheit
		Anzugsmoment max: 80Nm)		
93	055495	PWZ Rohrbogen 88,9 x R800 NIRO	2.00	Stk
94	055496	PWZ Rohr 90 x 1000mm	1.00	Stk
98	055943	Rad Aschetonne 240L	2.00	Stk
100	055750	Stütze unten Förderrohr	1.00	Stk
103	055743	Befestigung oben Förderrohr PW	1.00	Stk
104	055911	Klemmplatte hinten PW	1.00	Stk
105	055749	Klemmplatte Stützfuß PW	1.00	Stk
107	001594	Ankerbolzen FAZ II 10/ 10/ 95	4.00	Stk
1000	A000251	Aschesammelbehälter	1.00	Stk
2000	A000252	Übergabe in Tonne	1.00	Stk

Aschesammelbehälter (A000251)

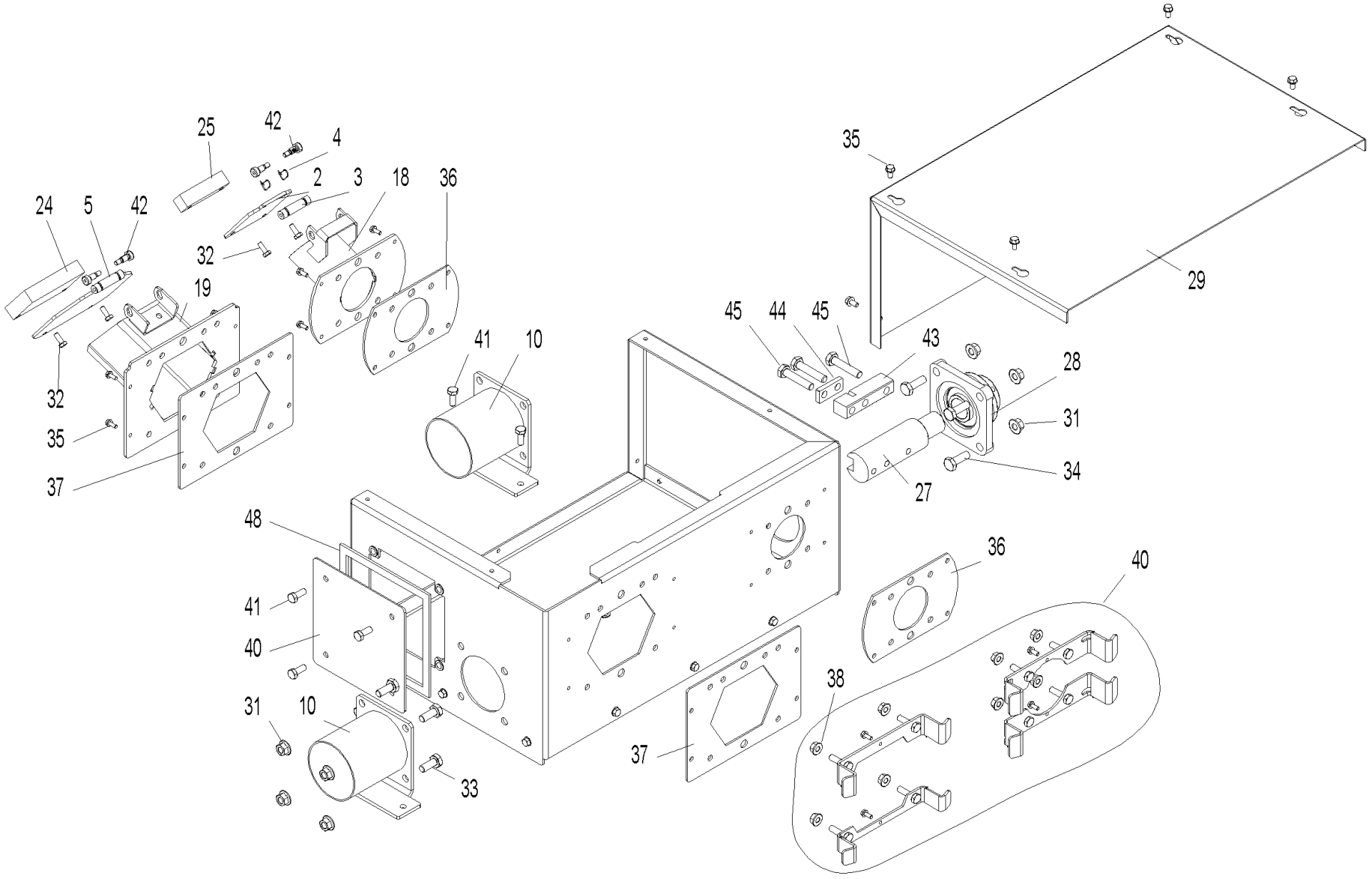

Aschesammelbehälter (A000251)

Pos.	Artikelnr.	Bezeichnung	Menge	Einheit
2	055521	Dichtklappe hinten Aschesammelbehälter PW	1.00	Stk
3	055524	Achse Klappe vorne Aschesammelbehälter PW	1.00	Stk
4	055737	Federbügelklammer Aschesammelbehälter PW	2.00	Stk
5	055676	Dichtklappe vorne Aschesammelbehälter PW	1.00	Stk
10	055680	Rohr Ausgang Aschesammelbehälter PW	1.00	Stk
18	055720	Auslassrohr hinten Aschesammelbehälter PW	1.00	Stk
19	055721	Auslassrohr vorne Aschesammelbehälter PW	1.00	Stk
24	055517	Gewicht Klappe vorne Aschesammelbehälter PW	1.00	Stk
25	055520	Gewicht Klappe hinten Aschesammelbehälter PW	1.00	Stk
27	055690	Welle hinten Schnecke Aschesammelbehälter PW	1.00	Stk
28	052859	Flanschlager mit Berührungsschutz Ø30 Bauhöhe 40,2; 4-Loch; UCF 206 FYH (staubdicht)	1.00	Stk
29	055692	Deckel Übergabe in Tonne Aschesammelbehälter PW	1.00	Stk
31	016567	Sperrzahnmutter M10 verzinkt	2.00	Stk
32	024759	Sechskantschraube DIN 933 - M6x16 - 8.8 - verzinkt	1.00	Stk
33	054526	Sechskantschraube DIN 933 - M10x25 - 8.8 - verzinkt	1.00	Stk
34	054269	Sechskantschraube DIN 933 - M10x30 - 8.8 - verzinkt	1.00	Stk
35	031549	Sechskantschraube DIN 7500 - M6x12	1.00	Stk
36	055710	Dichtung Ascheflansch hinten Aschesammelbehälter PW	1.00	Stk
37	055711	Dichtung Ascheflansch vorne Aschesammelbehälter PW	2.00	Stk
38	016553	Sperrzahnmutter M8 verzinkt	8.00	Stk
40	055704	Wartungsdeckel Asche Aschesammelbehälter PW	1.00	Stk
41	017086	Sechskantschraube DIN 933 - M8x20 - 8.8 - verzinkt	4.00	Stk

Aschesammelbehälter (A000251)

Pos.	Artikelnr.	Bezeichnung	Menge	Einheit
42	055736	Schulterpassschraube 12.9 - 6x12 / ISO 7379 (M6x12)	4.00	Stk
43	055712	Fixierung Schnecke Aschesammelbehälter PW	1.00	Stk
44	055718	Fixierung Schnecke oben Aschesammelbehälter PW	1.00	Stk
45	033099	Sechskantschraube DIN 933 - M10x50 - 8.8	6.00	Stk
48	054532	Dichtung Wartungsdeckel Vorratsbehälter/Aschesammelbehälter	1.00	Stk

Übergabe in Tonne (A000252)

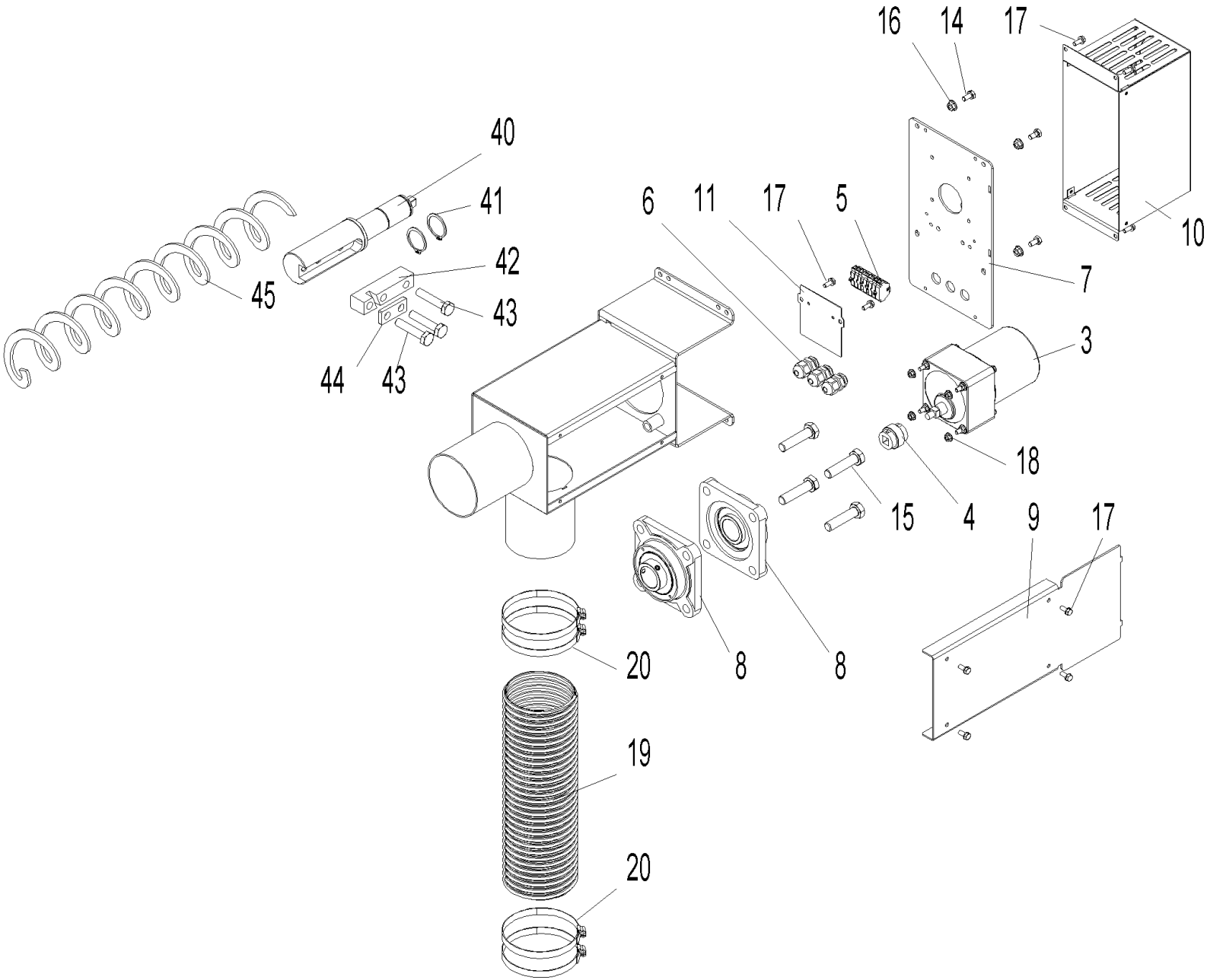

Übergabe in Tonne (A000252)

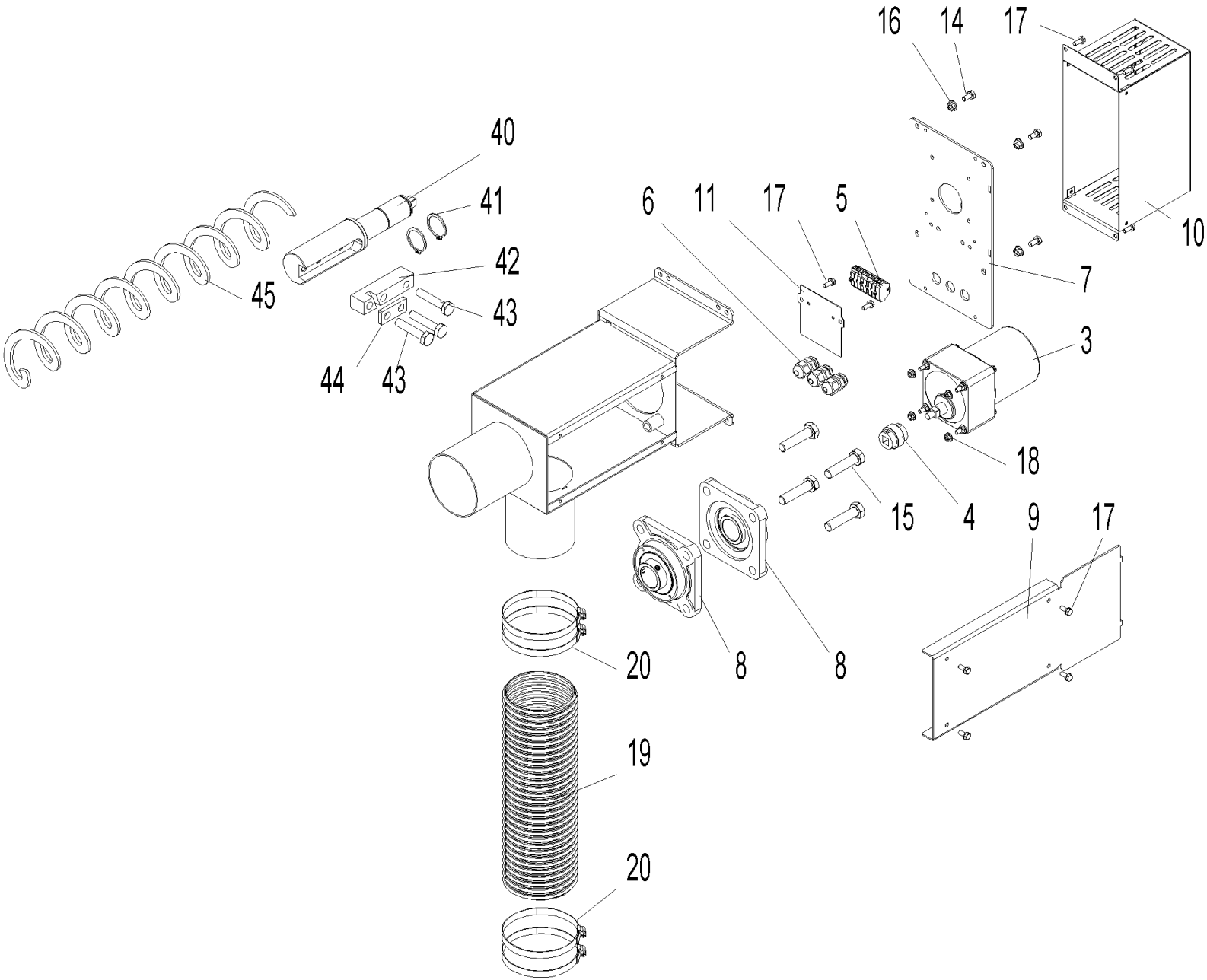

Übergabe in Tonne (A000252)

Pos.	Artikelnr.	Bezeichnung	Menge	Einheit
3	050901	Schneckenmotor SPG 4,8 U/min	1.00	Stk
4	055908	Kupplung 03 Übergabe Tonne PW	1.00	Stk
5	006921	Wagoblock 261 9-polig	1.00	Stk
6	006340	Kabelverschraubung	3.00	Stk
7	055507	Drehmomentenstütze Übergabe Tonne	1.00	Stk
8	052859	Flanschlager mit Berührungsschutz Ø30 Bauhöhe 40,2; 4-Loch; UCF 206 FYH (staubdicht)	2.00	Stk
9	055714	Deckel Übergabe Asche Tonne	1.00	Stk
10	055719	Berührungsschutz Motor Übergabe Tonne PW	1.00	Stk
11	055727	Halteplatte Wago Übergabe Tonne	1.00	Stk
14	017051	Sechskantschraube DIN 933 - M6x12 - 8.8	4.00	Stk
15	033099	Sechskantschraube DIN 933 - M10x50 - 8.8	4.00	Stk
16	016566	Sperrzahnmutter M6 verzinkt	4.00	Stk
17	031545	Gewindefurchende Sechskantschraube DIN 7500 - M5x12, verzinkt	10.00	Stk
18	016565	Sperrzahnmutter M5 verzinkt	4.00	Stk
19	055747	Hochtemperaturschlauch HTD Innen-Ø89mm (Bund mit 4 lfm.)	1.00	M
20	055748	Schlauchklemme (90 bis 100mm)	4.00	Stk
40	055502	Welle Schnecke Übergabe Tonne PW	1.00	Stk
41	055694	Sicherungsring DIN 471 - 30 x 1,5	1.00	Stk
42	055712	Fixierung Schnecke Aschesammelbehälter PW	1.00	Stk
43	033099	Sechskantschraube DIN 933 - M10x50 - 8.8	3.00	Stk
44	055718	Fixierung Schnecke oben Aschesammelbehälter PW	1.00	Stk
45	055508	PWZ Flexible Ascheschnecke (Länge = 5600mm +200/-50)	1.00	Stk

Zündung (A000158)

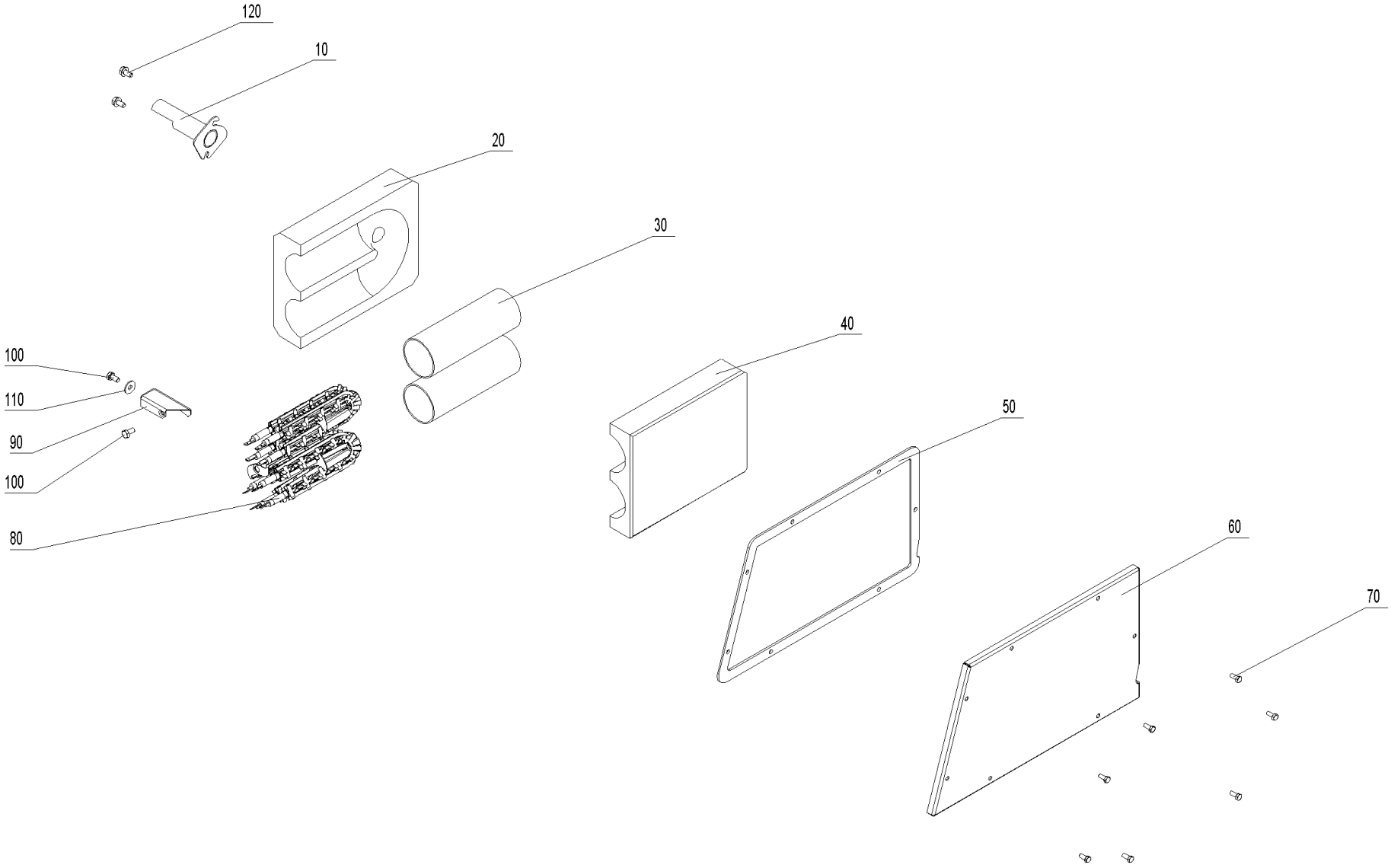

Zündung (A000158)

Pos.	Artikelnr.	Bezeichnung	Menge	Einheit
10	052716	Zündrohr PW24/30	1.00	Stk
10	053668	Zündrohr PW72-103	1.00	Stk
10	052766	Zündrohr PW40-60	1.00	Stk
20	052713	Isolierstein unten Zündung PW24-103	1.00	Stk
30	050489	Zündrohr Zündung LWP, PW24-103	2.00	Stk
40	007484	Isolierstein oben Zündung PW24-103	1.00	Stk
50	052993	Dichtung Zündung PW24-103	1.00	Stk
60	052717	Abdeckung Zündung PW24-103	1.00	Stk
70	017020	Sechskantschraube DIN 933 - M5x12 - A2	7.00	Stk
80	055201	Zündelement BW, FW ab Los15, VAE ab Los6, BWXL, LWK, BW2, BW2T, PW, BWL, BW2P	1.00	Stk
90	052387	Anschlag Zündung PW24-103	1.00	Stk
100	017051	Sechskantschraube DIN 933 - M6x12 - 8.8	2.00	Stk
110	031753	U-Scheibe DIN125 - M6 - A2	1.00	Stk
120	031549	Sechskantschraube DIN 7500 - M6x12	2.00	Stk

Luftregelung PL (A000159)

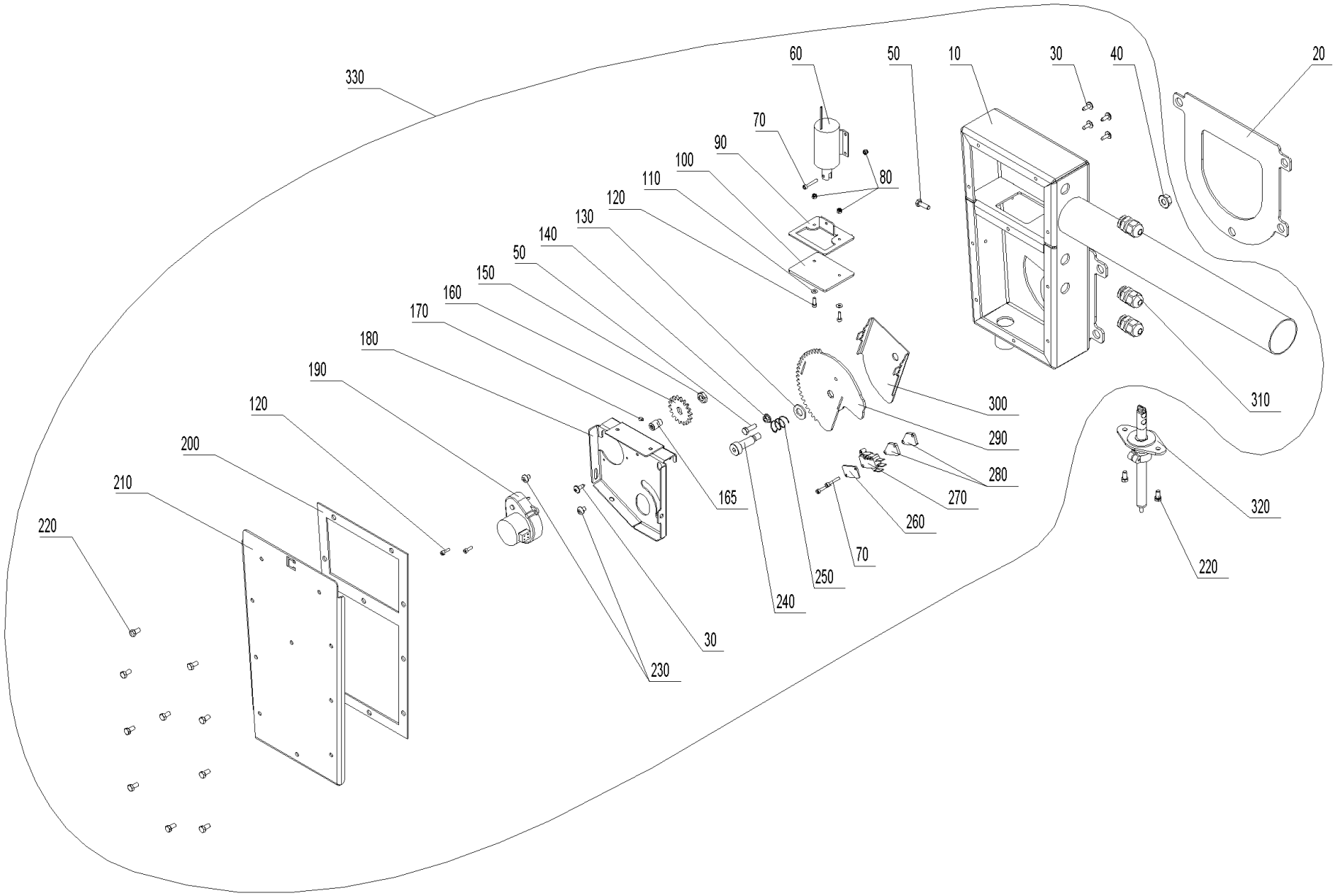

Luftregelung PL (A000159)

Pos.	Artikelnr.	Bezeichnung	Menge	Einheit
10	055783	Luftschacht P kpl. geschw. RAL 7021 schw. be.	1.00	Stk
20	052890	Dichtung Flansch Luftschacht PW24-103	1.00	Stk
30	018139	Zyl.-Schraube 4,2x13 m. U-Scheibe	5.00	Stk
40	016553	Sperrzahnmutter M8 verzinkt	1.00	Stk
50	015025	Sechskantschraube DIN 933 - M5x16 - 8.8 - verzinkt	2.00	Stk
60	052911	Zylindermagnet PW24-60	1.00	Stk
70	016769	Zyl.-Schraube M3x20 verzinkt mit KS. DIN 7985 A Form H	3.00	Stk
80	016725	Sicherungsmutter DIN 985 - M 3 - 8 - verzinkt	3.00	Stk
90	052885	Absperrplatte PW24-103	1.00	Stk
100	052886	Dichtung Absperrplatte PW24-103	1.00	Stk
110	021474	U-Scheibe DIN 134 - M3 - verzinkt	2.00	Stk
120	052828	Zylinderschraube m. Innensechskant ISO 4762 - M 3 x 10 - 8.8 - verzinkt (DIN 912)	4.00	Stk
130	018058	U-Scheibe DIN 125 - M10	1.00	Stk
140	016565	Sperrzahnmutter M5 verzinkt	1.00	Stk
150	016659	Mutter DIN439 - M 8	1.00	Stk
160	055776	Stirnrad M2 Z18 TK36	1.00	Stk
165	056043	Stirnradbef. verz. schwarz chr.	1.00	Stk
170	054158	Gewindestifte mit ISK und Kegelkuppe ISO4026/DIN 913 M 5X 20 Edelstahl A2	1.00	Stk
180	055789	Konsole Stellmotor PL	1.00	Stk
190	095690	Luftklappen-Motor 1 U/min Crozet PuroWIN	1.00	Stk
200	055791	Di. De. Primärluftregelung	1.00	Stk
210	055792	De. Primärluftr. RAL7021 schw. be.	1.00	Stk

Luftregelung PL (A000159)

Pos.	Artikelnr.	Bezeichnung	Menge	Einheit
220	016756	SKT-Flanschschraube KL100 M5x10 vz. mit Sperr-Rippen unter dem Flansch, Gewinde bis Kopf, Oberflächengehärtet	12.00	Stk
230	016768	Linsenschraube mit Innensechskant, M3x5 verz.,	2.00	Stk
240	055777	Pass - Schulterschraube D10x25 ISO7379	1.00	Stk
250	053997	Druckfeder PW24-60	1.00	Stk
260	051044	Platte Mikroschalter PW24-60	1.00	Stk
270	009277	Mikroschalter mit Rollenhebel VAE, BW, BW2, LWP, LWK, LWPT, PW24-103	1.00	Stk
280	056070	Platte Mikroschalter 3mm	2.00	Stk
290	055787	Stirnrad PL	1.00	Stk
300	055784	Luftklappe PL	1.00	Stk
310	006340	Kabelverschraubung	3.00	Stk
320	052878	Strömungsmessumformer PW24-103	1.00	Stk
330	056250	Primärluftkasten kpl. PW24-103	1.00	Stk

Schaltfeld (A000160)

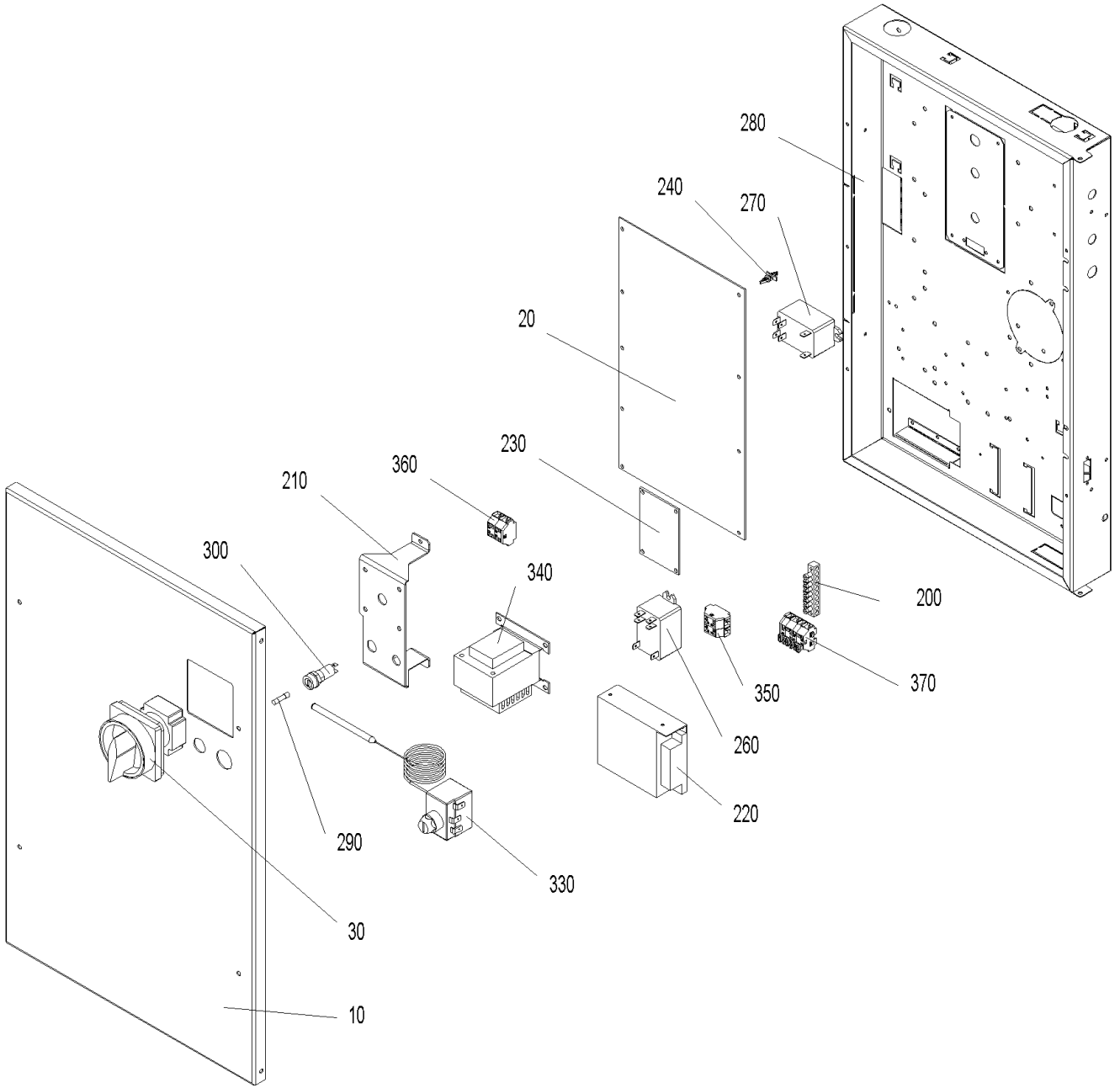

Schaltfeld (A000160)

Pos.	Artikelnr.	Bezeichnung	Menge	Einheit
10	053289	Deckel Schaltfeld PW24-103	1.00	Stk
20	012007	Feuerungsautomat PW24-103	1.00	Stk
30	012010	Hauptschalter 2polig 16 A PW24-103	1.00	Stk
40	013840	Kabel Nr.: 250 230V-Versorgung Fu`s + FA2 PW24-103	1.00	Stk
50	013841	Kabel Nr.: 251 Ascheaustragung PW24-103	1.00	Stk
60	013850	Kabel Nr.: 259 Position Ascheschieber + Schalter Überfüllung PW24-103	1.00	Stk
70	013851	Kabel Nr.: 260 Position Glutbettschieber + Level Controll PW24-103	1.00	Stk
80	013842	Kabel Nr.: 252 Heizflächenreinigung PW24-103	1.00	Stk
90	013843	Kabel Nr.: 253 LON Elektrikeranschluß PW24-103	1.00	Stk
100	013844	Kabel Nr.: 254 LON FA2 + STB PW24-103	1.00	Stk
110	013845	Kabel Nr.: 255 Motor Ascheschieber PW24-103	1.00	Stk
120	013847	Kabel Nr.: 256 Motor Glutbettschieber PW24-103	1.00	Stk
130	013848	Kabel Nr.: 257 ModBUS Steigschnecke PW24-103	1.00	Stk
140	013849	Kabel Nr.: 258 Netz + Heizungsnotschalter PW24-103	1.00	Stk
145	053326	Kabel Primärzündung PW24-103	1.00	Stk
150	013852	Kabel Nr.: 261 Saugzuggebläse PW24-103	1.00	Stk
160	013853	Kabel Nr.: 262 Sekundärluftklappe PW24-103	1.00	Stk
170	013855	Kabel Nr.: 263 Sekundärzündung PW24-103	1.00	Stk
180	013856	Kabel Nr.: 264 Türschalter kpl. PW24-103	1.00	Stk
190	013857	Kabel Nr.: 265 Versorgung ModBUS FU`s+FA2 PW24-103	1.00	Stk
200	009929	Klemmschiene MS 8x8mm 8pol.+Befestigungsbohrungen	1.00	Stk
210	053984	Konsole Hauptschalter PW24-60	1.00	Stk

Schaltfeld (A000160)

Pos.	Artikelnr.	Bezeichnung	Menge	Einheit
220	002054	Netzteil 12V, 4,2A Type LRS-50-12	1.00	Stk
230	012014	Platine - Relais PW24-103	1.00	Stk
240	007609	Platinenhalter CBS-4N spitz VAE, FW, BW10-26, BWXL, BW2, BW2T, LWPT, PW24-103, BWL	1.00	Stk
250	007620	Rauchgasfühler PT1000 (Länge 1100mm) BW2, BW2T, PW24-103, BWL, BW2P	1.00	Stk
260	005075	Relais 16A AC 2 polig 12V DC Steuerung	1.00	Stk
270	005025	Relais, Schließer 30A/250V AC , OMRON G7L-2A-BUB PMX, BW10-26, FW, VAE, BWXL, LWK, PW24-103	1.00	Stk
290	003228	Sicherung 6,3A	1.00	Stk
300	055193	ET-Set: Sicherungshalter f. Feinsicherung inkl. Umbauanleitung JW	1.00	Stk
310	502186	MES009M Tauchfühler ZTF 222 (Boiler-/Kessel-/Pufferfühler) für MES, Länge: 2,5m	1.00	Stk
320	007626	Thermoelement 2AB NM30/110 mm TI/DI 2AB25 2,5 (Brennkammer- bzw. Thermocontrollfühler)	1.00	Stk
330	005672	Sicherheitsthermostat VAE, LWK, BW2, BW2T, LWPT, PW24-103, BWL, BW2P Schaltpunkt:100 C +0/-6 Fühlerl.isol.; bei EW/JW ab 05/2017 (	1.00	Stk
340	007096	Trafo O2-Sonde 18VA LWP18-50, LWK, LWPT, PW24-103	1.00	Stk
350	006834	Wagoblock 261 4-polig "Sicherheit 1-4" (2xblau/2xgrau) VAE, FW, BW2, BW2T, LWPT, PW24-103, BWL	1.00	Stk
360	006833	Wagoblock 261 4-polig "12V GND" VAE, FW, BW2, BW2T, LWPT, PW24-103, BWL	1.00	Stk
370	007656	Wagoblock 261 XS 1-6 BW2, PW24-103	1.00	Stk
380	018140	Zylinder Schraube 4,2x13m unt.Scheibe DIN 7981 stumpf	1.00	Stk

Luftregelung SL/TL (A000231)

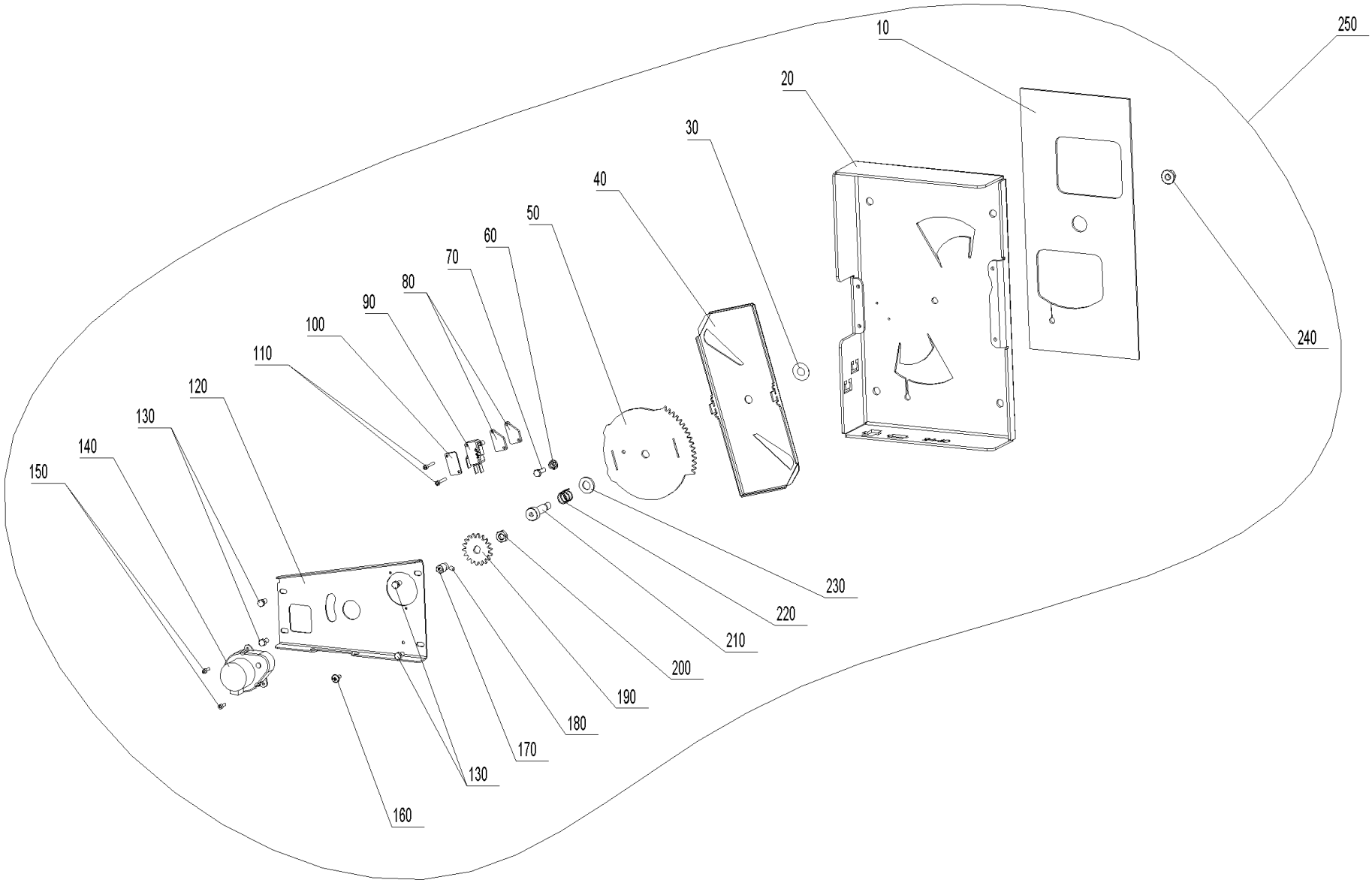

Luftregelung SL/TL (A000231)

Pos.	Artikelnr.	Bezeichnung	Menge	Einheit
10	055559	Dichtung Luftregelung S/T PW72-103	1.00	Stk
20	055772	Konsole Luftregelung S/T PW72-100	1.00	Stk
30	056042	Distanzscheibe 10x16x0,2 A2 DIN988	1.00	Stk
40	055773	Luftklappe S/T	1.00	Stk
50	055775	Stirnrad S/T	1.00	Stk
60	016565	Sperrzahnmutter M5 verzinkt	1.00	Stk
70	015025	Sechskantschraube DIN 933 - M5x16 - 8.8 - verzinkt	1.00	Stk
80	056070	Platte Mikroschalter 3mm	2.00	Stk
90	009277	Mikroschalter mit Rollenhebel VAE, BW, BW2, LWP, LWK, LWPT, PW24-103	1.00	Stk
100	051044	Platte Mikroschalter PW24-60	1.00	Stk
110	016769	Zyl.-Schraube M3x20 verzinkt mit KS. DIN 7985 A Form H	2.00	Stk
120	055779	Bef. Stellmotor S/T	1.00	Stk
130	016756	SKT-Flanschschraube KL100 M5x10 vz. mit Sperr-Rippen unter dem Flansch, Gewinde bis Kopf, Oberflächengehärtet	4.00	Stk
140	095690	Luftklappen-Motor 1 U/min Crozet PuroWIN	1.00	Stk
150	052828	Zylinderschraube m. Innensechskant ISO 4762 - M 3 x 10 - 8.8 - verzinkt (DIN 912)	2.00	Stk
160	018140	Zylinder Schraube 4,2x13m unt.Scheibe DIN 7981 stumpf	1.00	Stk
170	056043	Stirnradbef. verz. schwarz chr.	1.00	Stk
180	054158	Gewindestifte mit ISK und Kegelkuppe ISO4026/DIN 913 M 5X 20 Edelstahl A2	1.00	Stk
190	055776	Stirnrad M2 Z18 TK36	1.00	Stk
200	016659	Mutter DIN439 - M 8	1.00	Stk
210	055777	Pass - Schulterschraube D10x25 ISO7379	1.00	Stk
220	053997	Druckfeder PW24-60	1.00	Stk

Luftregelung SL/TL (A000231)

Pos.	Artikelnr.	Bezeichnung	Menge	Einheit
230	018058	U-Scheibe DIN 125 - M10	1.00	Stk
240	016553	Sperrzahnmutter M8 verzinkt	1.00	Stk
250	055780	Luftregelung - Sekundär PW72-103	1.00	Stk

Heizflächenreinigung (A000232)

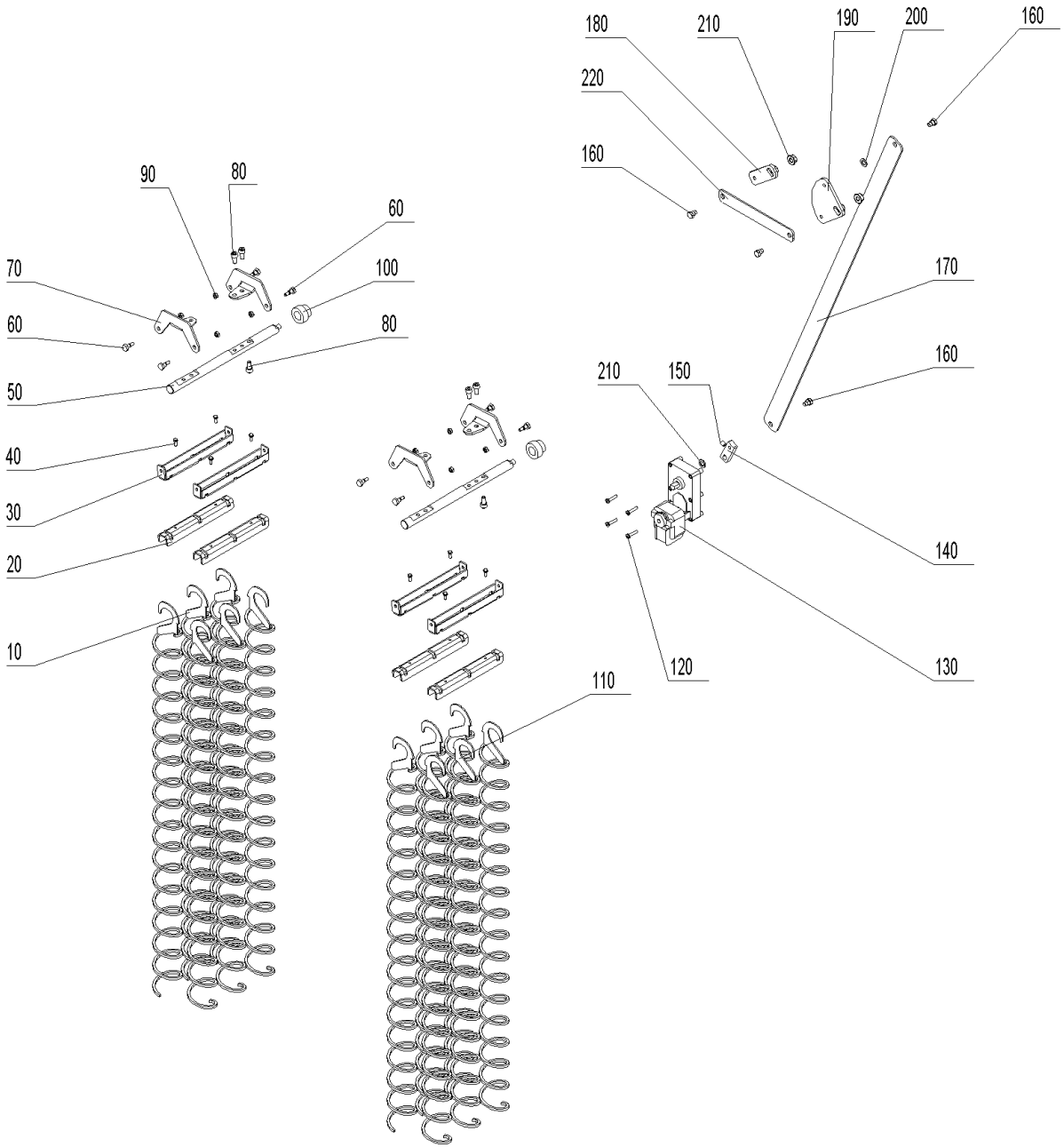

Heizflächenreinigung (A000232)

Pos.	Artikelnr.	Bezeichnung	Menge	Einheit
10	055556	Reinigungsschnecke links PW40-60 (Fallzug), PW72-103 (10x3 - Steig- u. Fallzug)	18.00	Stk
20	047065	Reinigungsprofil unten	6.00	Stk
30	047064	Reinigungsprofil oben	6.00	Stk
40	017020	Sechskantschraube DIN 933 - M5x12 - A2	12.00	Stk
50	053689	Welle für Heizflächenreinigung PW72-103	3.00	Stk
60	006756	Schraube Heizflächenreinigung M6	12.00	Stk
70	052738	Lagerarm für Heizflächenreinigung PW24-103	6.00	Stk
80	053102	Zylinderschraube m. Innensechskant ISO 4762 - M 8 x 16 - A4 (DIN 912)	15.00	Stk
90	016596	Mutter DIN 934 - M6 - A2	12.00	Stk
100	047416	Lager Heizflächenreinigung BWXL 35-60, PW24-103	3.00	Stk
120	016837	Zylinderschraube DIN 7985 M5x25 verz.m.KS	4.00	Stk
130	044665	Motor Ascheaustragung/ Heizflächenreinigung PMX15, BWE10-60, BW2, BW2T, PW, BWL, BW2P	1.00	Stk
140	053282	Rüttelhebel Motor HFR PW24-103	1.00	Stk
150	033112	Gewindestift DIN916 - M8x10-45H (mit Ringschneide)	1.00	Stk
160	012502	Ansatzschraube M8 x 6.5 verzinkt Ansatz D10 SW13	5.00	Stk
170	053284	Verbindung Heizflächenreinigung PW24-103	1.00	Stk
180	053281	Achsenhebel links HFR PW24-103	2.00	Stk
190	053280	Achsenhebel rechts HFR PW24-103	1.00	Stk
200	018031	Scheibe ISO 7092 - 10 - blank	1.00	Stk
210	016567	Sperrzahnmutter M10 verzinkt	3.00	Stk
220	053691	Verbinder Rüttelachse HFR PW72-103	1.00	Stk

PuroWIN 83 (A000226_2)

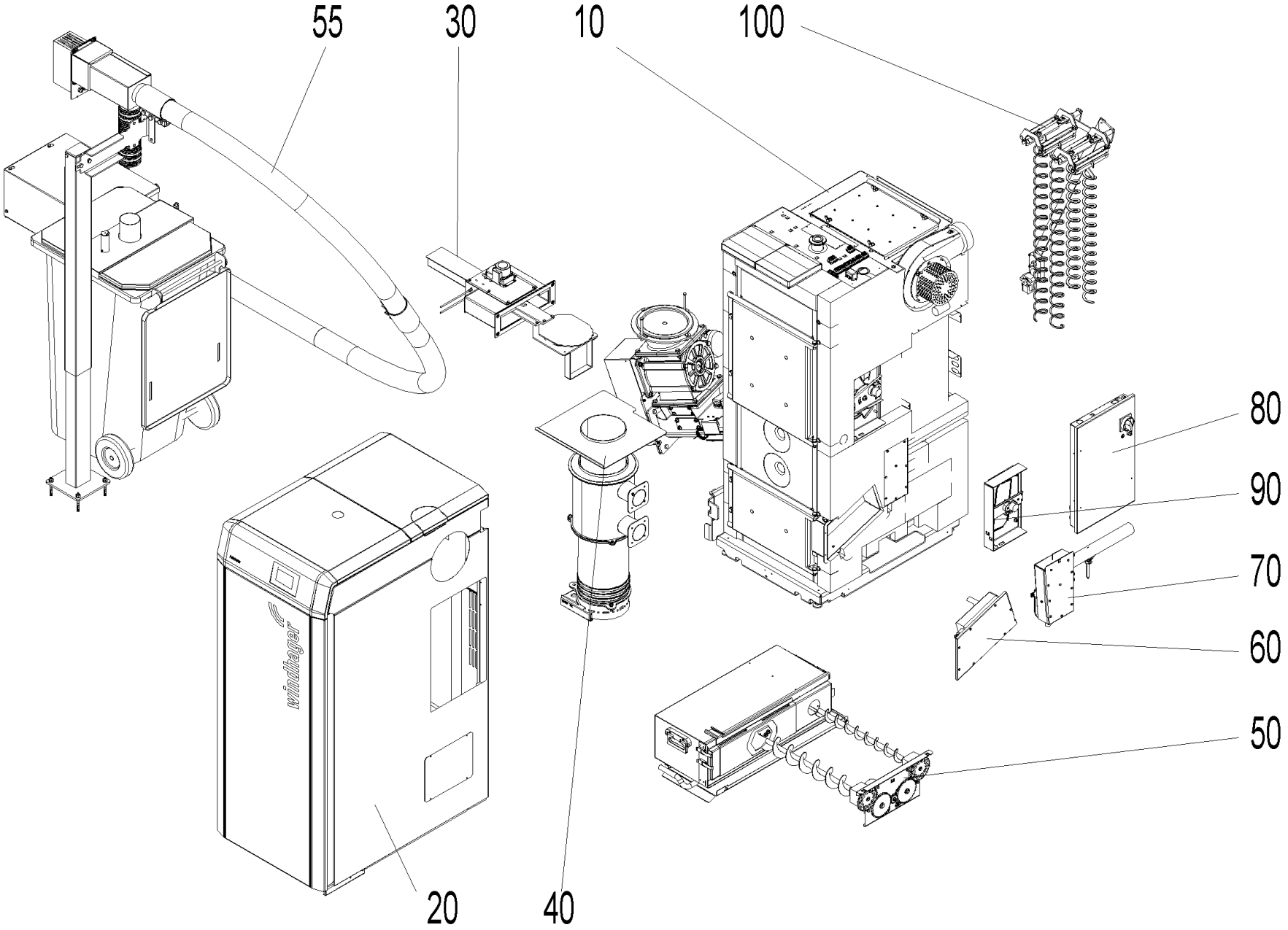

PuroWIN 83 (A000226_2)

Pos.	Artikelnr.	Bezeichnung	Menge	Einheit
10	A000227	Kessel	1.00	Stk
20	A000228	Verkleidung	1.00	Stk
30	A000229	Entaschung	1.00	Stk
40	A000230	Brennkammer	1.00	Stk
50	A000154	Ascheaustragung	1.00	Stk
55	A000250	Ascheaustragung in Tonne	1.00	Stk
60	A000158	Zündung	1.00	Stk
70	A000159	Luftregelung PL	1.00	Stk
80	A000160	Schaltfeld	1.00	Stk
90	A000231	Luftregelung SL/TL	1.00	Stk
100	A000232	Heizflächenreinigung	1.00	Stk

Kessel (A000227)

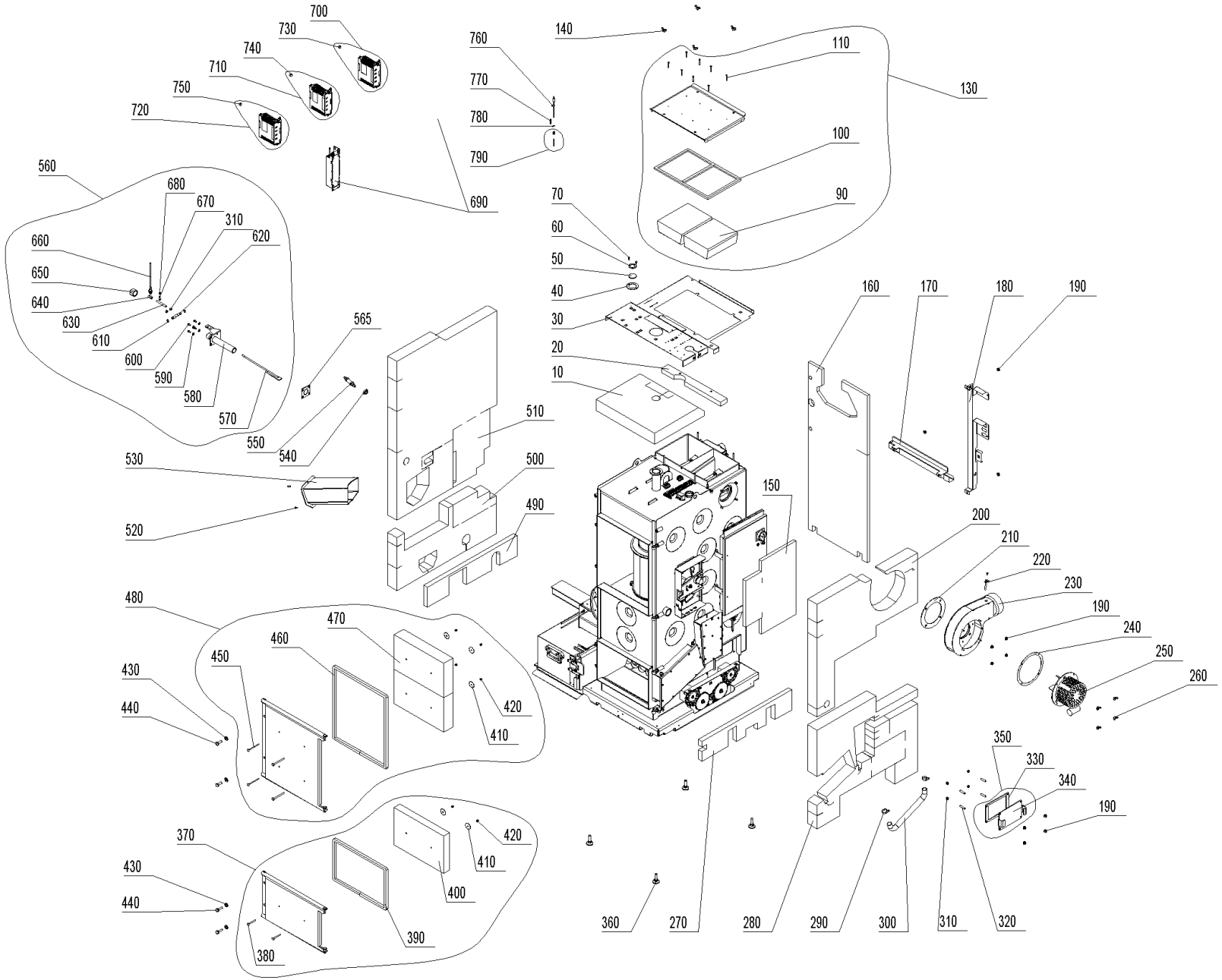

Kessel (A000227)

Pos.	Artikelnr.	Bezeichnung	Menge	Einheit
10	053835	Isolierung oben PW72-103	1.00	Stk
20	053836	Isolierung oben hinten PW72-103	1.00	Stk
30	053837	Isolierabdeckung oben PW72-103	1.00	Stk
40	051712	Dichtung Schauloch PW24-103	1.00	Stk
50	000307	Glasscheibe Ø 45/4 PW24-103	1.00	Stk
60	087300	Rosette Schauloch PW24-103	1.00	Stk
70	031545	Gewindefurchende Sechskantschraube DIN 7500 - M5x12, verzinkt	2.00	Stk
90	053657	Isolierstein NHF rechts PW72-103	1.00	Stk
90	053656	Isolierstein NHF links PW72-103	1.00	Stk
100	053658	Dichtschnur Reinigungsdeckel PW72-103	1.00	Stk
110	016719	Linsen-Bohrschraube DIN 7504N - 4,2x38	8.00	Stk
130	055811	Reinigungsdeckel mont. PW72-103	1.00	Stk
140	019414	Flügelmutter ähnl. DIN 315 - M8 - St - verzinkt	4.00	Stk
150	053839	Isolierung Schaltfeld PW72-103	1.00	Stk
160	053846	Isolierung hinten oben PW72-103	1.00	Stk
170	052996	Kabelschacht unten PW24-103	1.00	Stk
180	052704	Kabelschacht senkrecht PW24-103	1.00	Stk
190	016553	Sperrzahnmutter M8 verzinkt	11.00	Stk
200	053844	Isolierung rechts oben PW72-103	1.00	Stk
210	054947	Sekundärluftdichtung mitte 1	1.00	Stk
220	041498	Schutzrohr Rauchgasfühler	1.00	Stk
230	055812	Gebläsekasten PW72-103	1.00	Stk

Kessel (A000227)

Pos.	Artikelnr.	Bezeichnung	Menge	Einheit
250	006241	Motor Saugzuggebläse PW72-103	1.00	Stk
260	019410	Flügelmutter DIN315 - M6	6.00	Stk
270	053840	Isolierung rechts innen PW72-103	1.00	Stk
280	053845	Isolierung rechts unten PW72-103	1.00	Stk
290	029424	IDEAL-Schlauchklemmen 20-32mm	2.00	Stk
300	052989	Schlauch Silikon SG1M PW24-103	1.00	Stk
310	031154	Mutter DIN934 - M8 - A4	4.00	Stk
320	016163	Gewindestift DIN913 - M8x40-A2	4.00	Stk
330	047190	Dichtung Abdeckblech PW24-103	1.00	Stk
340	047188	Abdeckblech PW24-103	1.00	Stk
350	047991	Deckel für Nachheizflächen unten BW XL, PW24-103	1.00	Stk
360	009994	Stellfuß	4.00	Stk
370	055813	Aschetür mont. PW72-103	1.00	Stk
380	016190	Flachrundschraube M6x90	2.00	Stk
390	053672	Dichtschnur Aschetür PW72-103	1.00	Stk
400	053831	Isolierstein Aschetür PW72-103	1.00	Stk
410	016191	Karosserie Scheibe M6 A2 6,4x40x1,5	6.00	Stk
420	016192	Hutmutter hohe Form DIN1587 - M6 A2	6.00	Stk
430	017183	U-Scheibe DIN125 - M12	4.00	Stk
440	017865	Sechskantschraube M12x35 - 8.8	4.00	Stk
450	016190	Flachrundschraube M6x90	4.00	Stk
460	053660	Dichtschnur Heiztür PW72-103	1.00	Stk

Kessel (A000227)

Pos.	Artikelnr.	Bezeichnung	Menge	Einheit
470	053661	Isolierstein Heiztür PW72-103	2.00	Stk
480	055814	Heiztür mont. PW72-103	1.00	Stk
490	053841	Isolierung links innen PW72-103	1.00	Stk
500	053843	Isolierung links unten PW72-103	1.00	Stk
510	053842	Isolierung links PW72-103	1.00	Stk
520	020095	Linsensenkschraube TT, DIN 7500ME M5x16 verz.	2.00	Stk
530	053674	Schneckenrohr kpl. PW72-103	1.00	Stk
540	007094	Isolierring Lambdasonde	1.00	Stk
550	051646	Lambdasonde NGK inkl. Kabel	1.00	Stk
560	053680	Level Control montiert PW72-103	1.00	Stk
565	053551	Dichtung Deckel Entaschung PW72-103	1.00	Stk
570	053683	Fühler kpl. PW72-103	1.00	Stk
580	052734	Level Controll Rohr kpl. PW24/30, PW72-103	1.00	Stk
590	020540	U-Scheibe DIN 134 - M6	4.00	Stk
600	017051	Sechskantschraube DIN 933 - M6x12 - 8.8	4.00	Stk
610	052174	Sicherungsring DIN 471 - 12 X 1	2.00	Stk
620	052099	Level Controll Achse PW24-103	1.00	Stk
630	017032	Gewindebolzen M8x80 verzinkt	1.00	Stk
640	048554	Verlängerungsmutter M8	1.00	Stk
650	008850	Kappe Nr. 300, 1" schwarz	1.00	Stk
660	007657	Näherungsschalter M12 induktiv PW24-103	1.00	Stk
670	015471	Sechskantschraube DIN 933 - M6x20 - 8.8 - verzinkt	1.00	Stk

Kessel (A000227)

Pos.	Artikelnr.	Bezeichnung	Menge	Einheit
680	016594	Mutter DIN 934 - M6 - 8 - verzinkt	1.00	Stk
690	054185	Filter zu FU, 0,75kW, 1-Phase	2.00	Stk
700	055837	ET-SET: FU mit Eprom TANK 100 zu Zuführung pneumatisch PW72-103 zu Motor Lenze	1.00	Stk
710	054847	ET-SET: FU mit Eprom RAS zu Zuführung direkt PW24-103 zu Motor Lenze	1.00	Stk
720	054849	ET-SET: FU mit Eprom TANK zu Zuführung pneumatisch PuroWIN	1.00	Stk
730	054197	Eprom auf STOK program. zu FU PuroWIN Zuführung direkt / pneumatisch zu Motor Lenze	1.00	Stk
740	054196	Eprom RAS program. zu FU PuroWIN Zuführung direkt zu Motor Lenze	1.00	Stk
750	055838	Eprom auf TANK 100 program. zu FU PuroWIN 72-103 Zuführung pneumatisch zu Motor Lenze	1.00	Stk
760	007626	Thermoelement 2AB NM30/110 mm TI/DI 2AB25 2,5 (Brennkammer- bzw. Thermocontrollfühler)	1.00	Stk
770	050647	Feder Brennkammer-Fühler	1.00	Stk
780	031274	Öse M6	1.00	Stk
790	051069	Schutzrohr BK-Fühler kpl.	1.00	Stk
800	009185	Netzfilter FN2020-10-06 PW24-103	1.00	Stk
810	016594	Mutter DIN 934 - M6 - 8 - verzinkt	1.00	Stk

Verkleidung (A000228)

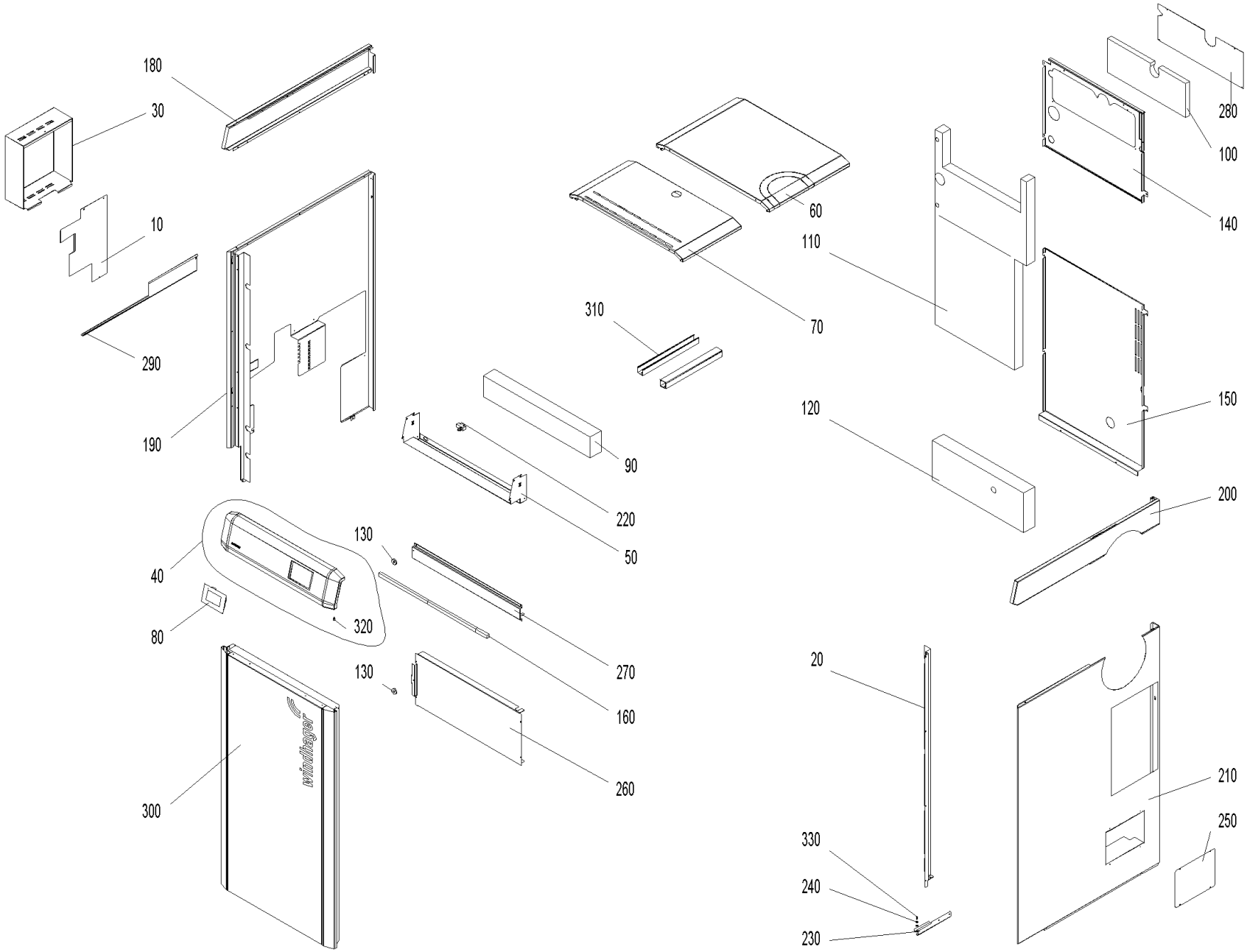

Verkleidung (A000228)

Pos.	Artikelnr.	Bezeichnung	Menge	Einheit
10	054622	Abdeckung Seitenwand links unten PW72-103	1.00	Stk
20	054602	Abdeckung Seitenwand rechts PW72-103	1.00	Stk
30	053812	Abdeckung Steckerkonsole PW24-103	1.00	Stk
40	055397	Bedienfeld PW72-103	1.00	Stk
50	054624	Befestigungsblech Verkleidung PW72-103	1.00	Stk
60	054619	Deckel hinten PW72-103	1.00	Stk
70	054620	Deckel vorne PW72-103	1.00	Stk
80	001009	INF8 MES INFINITY InfoWIN Touch BW2T, LWPT, PW24-103, BW2P, AEHM inkl. Masterfunktion und Webserver	1.00	Stk
90	011175	Isolierung Bedienfeld PW72-103	1.00	Stk
100	011174	Isolierung Heizflächenreinigung oben PW72-103	1.00	Stk
110	011173	Isolierung Rückwand oben PW72-103	1.00	Stk
120	011172	Isolierung Rückwand unten PW72-103	1.00	Stk
130	001761	Magnet Ø31 gummiummantelt	1.00	Stk
140	054610	Rückwand oben PW72-103	1.00	Stk
150	054609	Rückwand unten PW72-103	1.00	Stk
160	009623	Schallisolierung Verkleidung PW72-103	3.00	Stk
170	016489	Schnappmutter 0536/17 vz.	1.00	Stk
180	054617	Seitenwand links oben PW72-103	1.00	Stk
190	055398	Seitenwand links PW72-103	1.00	Stk
200	054618	Seitenwand rechts oben PW72-103	1.00	Stk
210	054616	Seitenwand rechts unten PW72-103	1.00	Stk
210	016489	Schnappmutter 0536/17 vz.	7.00	Stk

Verkleidung (A000228)

Pos.	Artikelnr.	Bezeichnung	Menge	Einheit
220	007128	Türschalter (Mikroschalter) LWP18-50, BWXL 35-60, LWK, LWPT, PW	1.00	Stk
230	054164	Türangel unten PW72-103	1.00	Stk
240	018309	U-Scheibe DIN 134 - M5	1.00	Stk
250	053814	Verkleidung Abdeckung Reinigungsdeckel PW24-103	1.00	Stk
260	054606	Verkleidung Abdeckung vorne mitte PW72-103	1.00	Stk
270	054608	Verkleidung Abdeckung vorne oben PW72-103	1.00	Stk
280	054611	Verkleidung Deckel Heizflächenreinigung oben PW72-103	1.00	Stk
290	054625	Verkleidung Schiene links PW72-103	1.00	Stk
300	055396	Verkleidung Tür kpl. PW72-103	1.00	Stk
310	050978	Wand und Deckenkanal BW2, PW24-103	1.00	M
320	015507	Zapfenschraube M5x18	1.00	Stk
330	033092	Zapfenschrauben DIN927 - M5X5	1.00	Stk

Entaschung (A000229)

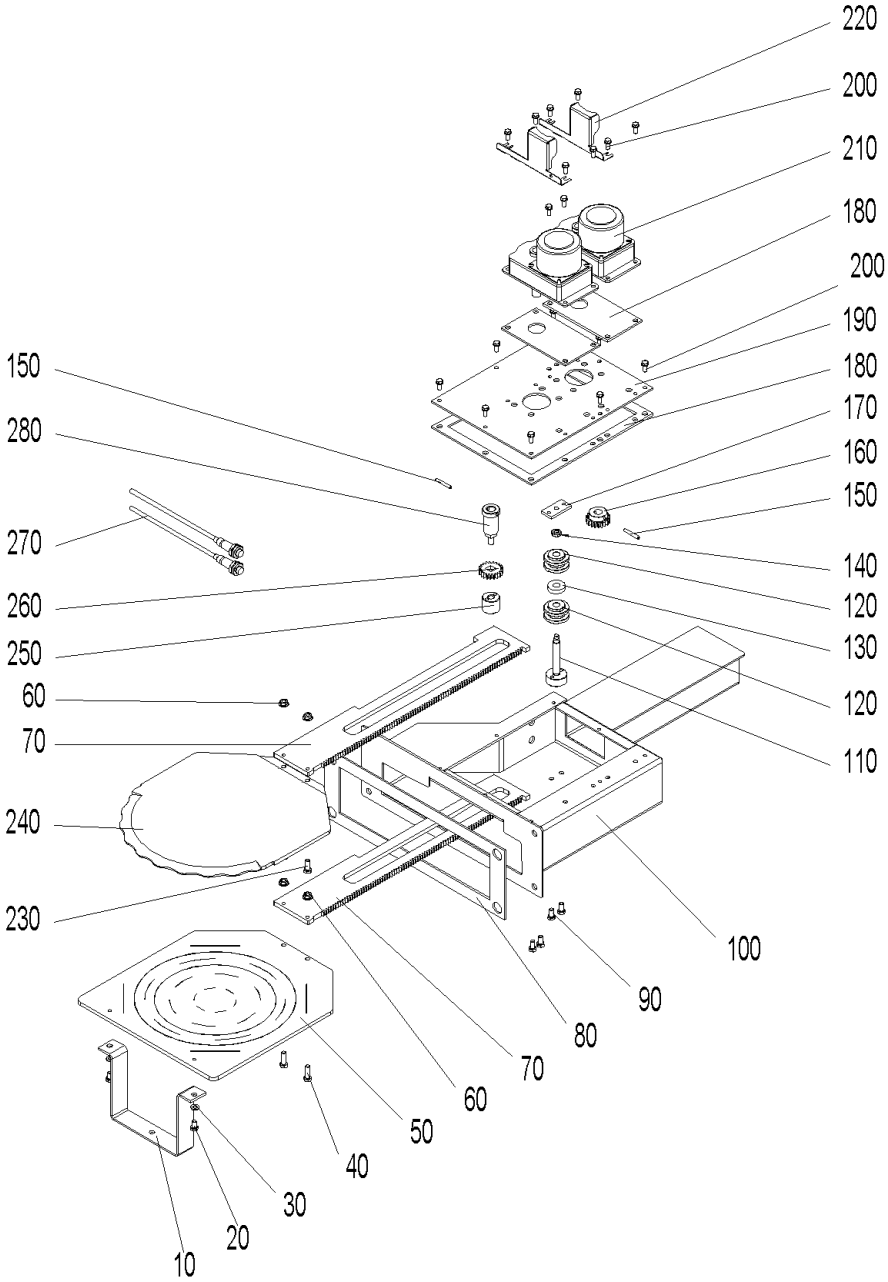

Entaschung (A000229)

Pos.	Artikelnr.	Bezeichnung	Menge	Einheit
10	053553	Ascheverdrängblech PW72-103	1.00	Stk
20	015026	Sechskantschraube DIN 933 - M6x10 - 8.8 - verzinkt	2.00	Stk
30	031713	Scheibe ISO 7089 - 6 - A2	2.00	Stk
40	015471	Sechskantschraube DIN 933 - M6x20 - 8.8 - verzinkt	2.00	Stk
50	052163	Ascheschieber PW40-103	1.00	Stk
60	016566	Sperrzahnmutter M6 verzinkt	4.00	Stk
70	053667	Zahnstange oben PW72-103	2.00	Stk
80	052152	Dichtung Fl. Entaschung PW24-103	1.00	Stk
90	017051	Sechskantschraube DIN 933 - M6x12 - 8.8	4.00	Stk
100	053531	Konsole Entaschung PW72-103	1.00	Stk
110	052153	Welle Lagerung PW24-103	1.00	Stk
120	007125	Lagerung Rüttelantrieb	4.00	Stk
130	052149	Distanzscheibe PW24-103	1.00	Stk
140	016659	Mutter DIN439 - M 8	1.00	Stk
150	018665	Spiral Spannstift DIN 7344 - 4x30	2.00	Stk
160	052154	Stirnrad PW24-103	1.00	Stk
170	052150	Lagerungsblech PW24-103	1.00	Stk
180	053551	Dichtung Deckel Entaschung PW72-103	1.00	Stk
190	053549	Deckel oben Entaschung PW72-103	1.00	Stk
200	031545	Gewindefurchende Sechskantschraube DIN 7500 - M5x12, verzinkt	18.00	Stk
210	053641	Motor - Entaschung PW24-103	2.00	Stk
220	054167	Kabelabdeckung Motor Entaschung PW24-103	2.00	Stk

Entaschung (A000229)

Pos.	Artikelnr.	Bezeichnung	Menge	Einheit
230	024768	Sechskantschraube DIN 933 - M6x16 - A4 - besch. mit Gleitlack bc2571 (bis 600°C)	2.00	Stk
240	055453	Glutbettschieber PW72-103	1.00	Stk
250	054944	Lagerung Welle PW72-103	1.00	Stk
260	054946	Stirnrad M1,5 Z21 PW72-103	1.00	Stk
270	007657	Näherungsschalter M12 induktiv PW24-103	2.00	Stk
280	054943	Antriebswelle PW72-103	1.00	Stk

Brennkammer (A000230)

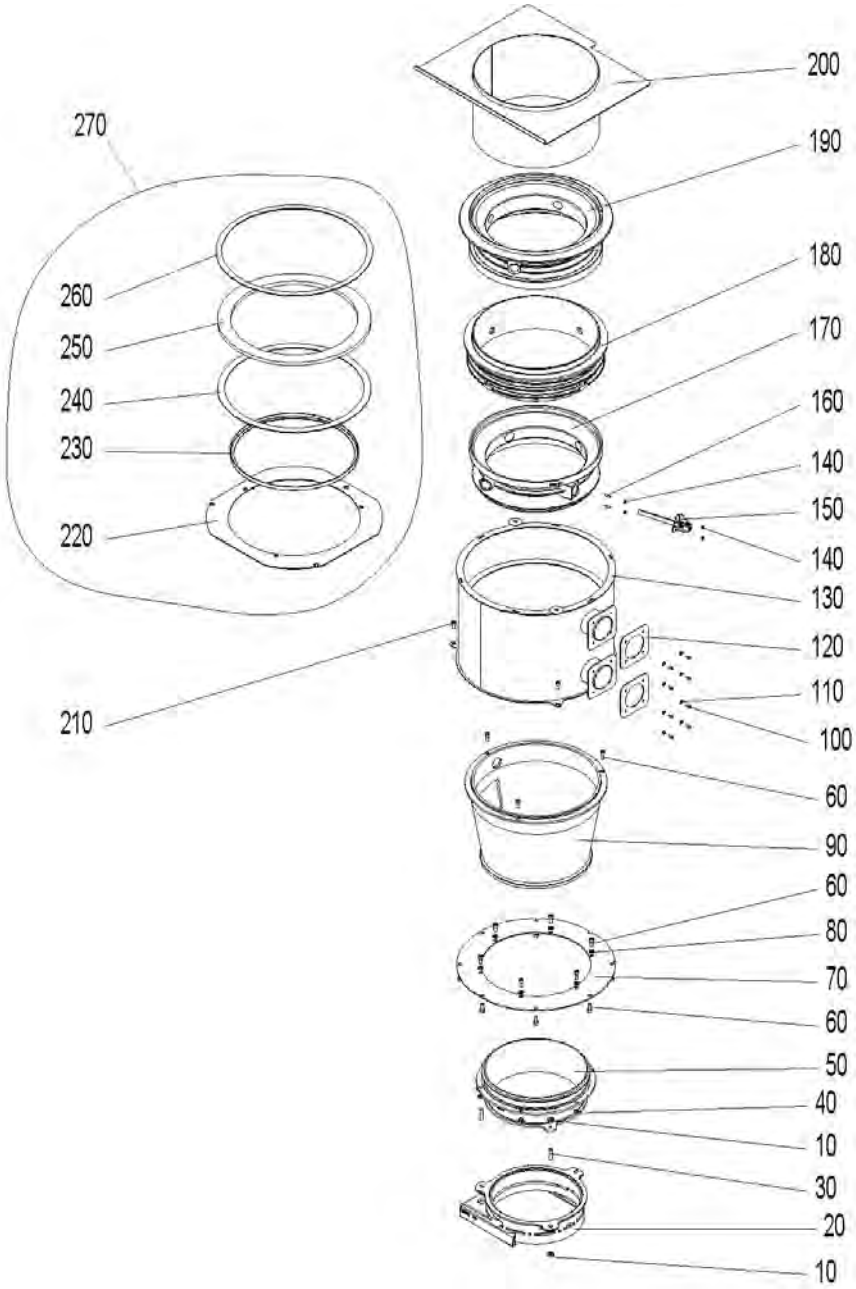

Brennkammer (A000230)

Pos.	Artikelnr.	Bezeichnung	Menge	Einheit
10	031155	Mutter DIN 934 - M10 - A4	6.00	Stk
20	052866	Konus D270 PW40-103	1.00	Stk
30	052061	Gewindestift M10x40 A2	3.00	Stk
40	031154	Mutter DIN934 - M8 - A4	6.00	Stk
50	054939	Vergaserrohr unten PW72-103	1.00	Stk
60	053834	Zylinderschraube m. Innensechskant M8 x 20 - A4	17.00	Stk
70	054942	Befestigungsblech Vergaserrohr PW72-103	1.00	Stk
80	024779	U-Scheibe ISO 7089 - 8 - A2	6.00	Stk
90	054938	Vergaserrohr PW72-103	1.00	Stk
100	017020	Sechskantschraube DIN 933 - M5x12 - A2	8.00	Stk
110	018309	U-Scheibe DIN 134 - M5	8.00	Stk
120	052088	Brennerdichtung rechts PW24-103	2.00	Stk
130	053506	Brenner kpl. PW72-103	1.00	Stk
140	017035	Mutter DIN 934 - M5 - A2	4.00	Stk
150	054951	Sekundärluftzündung kpl. PW72-103	1.00	Stk
160	054158	Gewindestifte mit ISK und Kegelkuppe ISO4026/DIN 913 M 5X 20 Edelstahl A2	2.00	Stk
170	053514	Sekundärluftdüse unten PW72-103	1.00	Stk
180	053515	Sekundärluftdüse oben PW72-103	1.00	Stk
190	053516	Tertiärluftdüse PW72-103	1.00	Stk
200	053517	Vergaserrohr oben PW72-103	1.00	Stk
210	016773	Zylinderschraube m. Innensechskant ISO 4762 - M 8 x 16 - 8.8 (DIN 912)	3.00	Stk
220	053498	Dichtung Brennerflansch PW72-103	1.00	Stk

Brennkammer (A000230)

Pos.	Artikelnr.	Bezeichnung	Menge	Einheit
230	054953	Sekundärluftdichtung mitte PW72-103	1.00	Stk
240	053524	Dichtung Sekundärluft PW72-103	1.00	Stk
250	053521	Dichtung Sekundärluft /Tertiärluft PW72-103	1.00	Stk
260	053523	Tertiärluftdichtung PW72-103	1.00	Stk
270	055810	Dichtungsset PW72-103	1.00	Stk

Ascheaustragung (A000154)

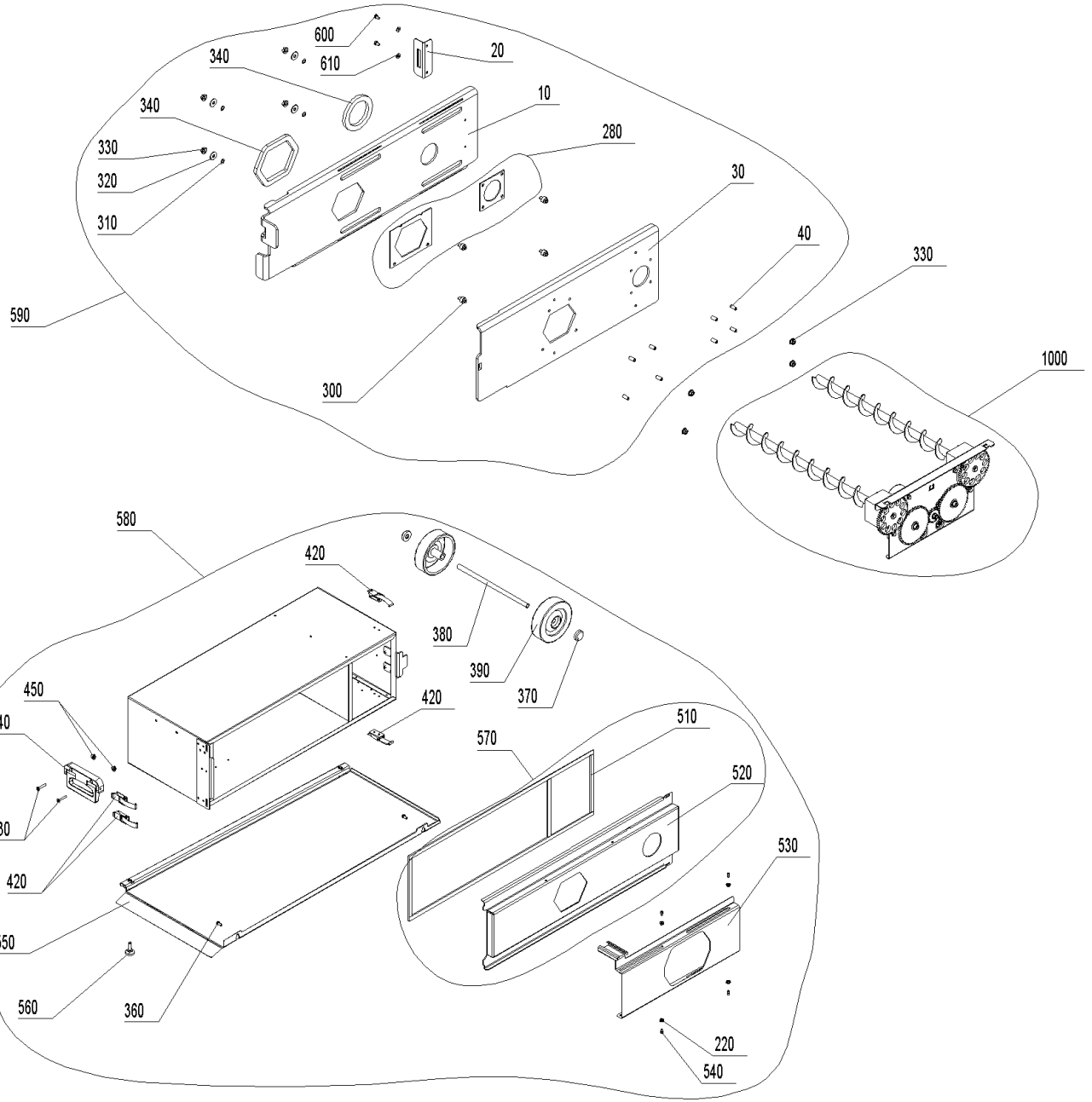

Ascheaustragung (A000154)

Pos.	Artikelnr.	Bezeichnung	Menge	Einheit
10	055157	Schieber Ascheboxflansch PW24-103	1.00	Stk
20	055158	Arretierung Aschebox PW24-103	1.00	Stk
30	055156	Flansch Aschebox PW24-103	1.00	Stk
40	033536	Gewindestift M8 x 20 VZ, DIN 913	8.00	Stk
220	016565	Sperrzahnmutter M5 verzinkt	4.00	Stk
280	055089	Dichtung Ascheboxflansch vorne und hinten PW24-103	1.00	Stk
300	055159	Bolzen Ascheschieber PW24-103	4.00	Stk
310	055132	Passscheibe D14	16.00	Stk
320	031756	U-Scheibe ISO 7093	4.00	Stk
330	016553	Sperrzahnmutter M8 verzinkt	4.00	Stk
340	055241	Silikon Vierkantprofil 15x10 mm,	0.78	M
360	031545	Gewindefurchende Sechskantschraube DIN 7500 - M5x12, verzinkt	2.00	Stk
370	006889	Sicherungsscheibe Ø12 mit Kunststoffkappe	2.00	Stk
380	051379	Achse Aschebox BW2, BW2T, BW2P	1.00	Stk
390	006888	Rad AG 125-12 Vollgummi Aschebehälter	2.00	Stk
420	009546	Spannverschluss	4.00	Stk
430	054573	Senkschraube M6x30 DIN965	2.00	Stk
440	054570	Griff PW24-103	1.00	Stk
450	016566	Sperrzahnmutter M6 verzinkt	2.00	Stk
510	054571	Dichtung Aschelade PW24-103	1.00	Stk
520	056206	Aschebox De. kpl. RAL 7012 FS PW	1.00	Stk
530	054494	Aschebox Verschluß PW24-103	1.00	Stk

Ascheaustragung (A000154)

Pos.	Artikelnr.	Bezeichnung	Menge	Einheit
540	033092	Zapfenschrauben DIN927 - M5X5	4.00	Stk
550	056207	Aschebox Sockel RAL 7012 FS PW	1.00	Stk
560	055141	Stellfuß PW24-103	2.00	Stk
570	054576	Aschebox Deckel kpl. PW24-103	1.00	Stk
580	052700	PWZ050 Aschebox zu Hackgut-Vergaser Abmessungen ohne Griff u. ohne Räder: BxHxT ca. 342x225x744mm Nutzvolumen: 50L Abmessungen in	1.00	Stk
590	055218	Ascheschieber kpl. PW24-103	1.00	Stk
600	015026	Sechskantschraube DIN 933 - M6x10 - 8.8 - verzinkt	2.00	Stk
610	020540	U-Scheibe DIN 134 - M6	2.00	Stk
1000	A000257	Schnecken m. Antrieb	1.00	Stk

Schnecken m. Antrieb (A000257)

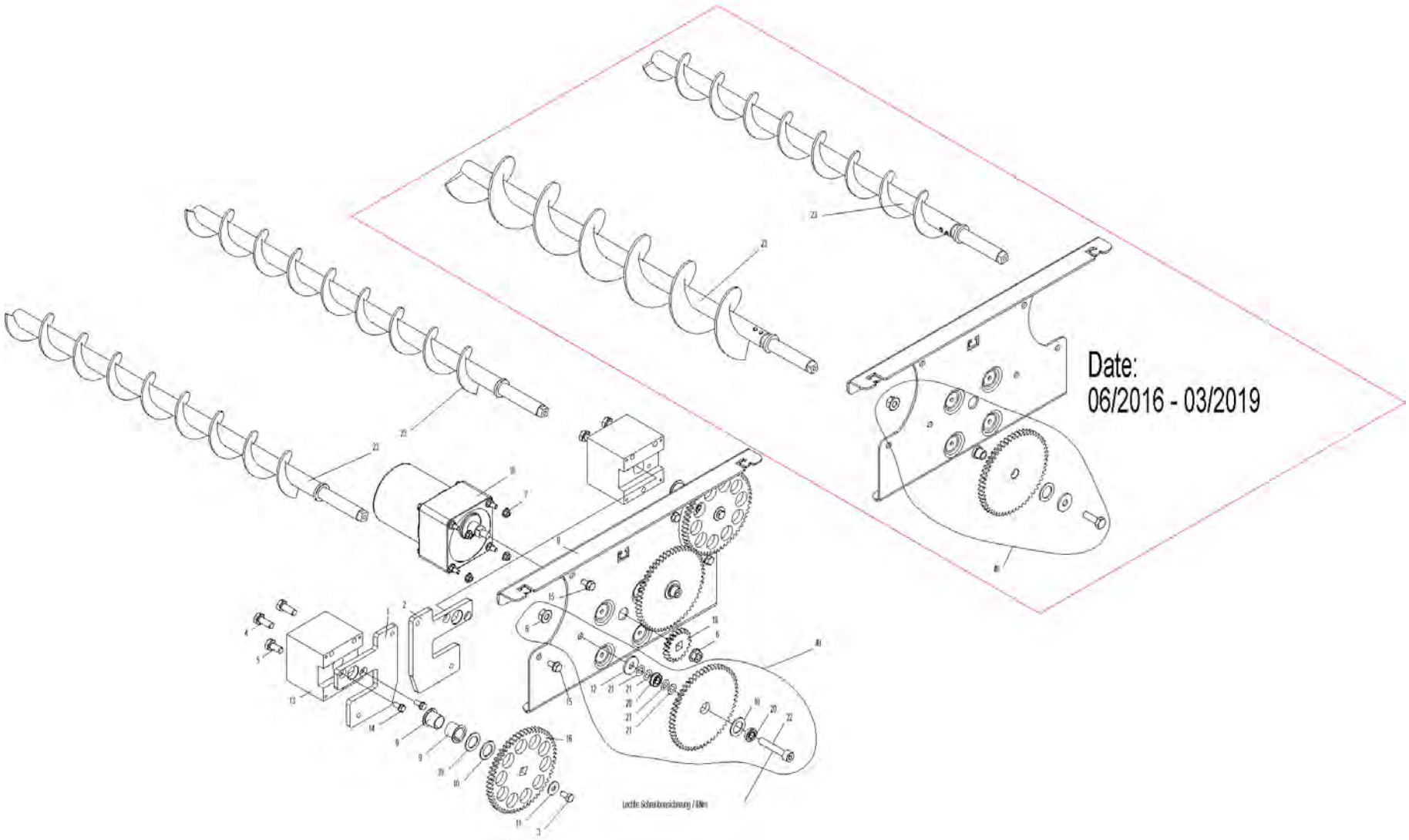

Schnecken m. Antrieb (A000257)

Pos.	Artikelnr.	Bezeichnung	Menge	Einheit
1	051169	Flanschplatte links AAT PW24-103	1.00	Stk
2	052371	Flanschplatte rechts AAT PW24-103	1.00	Stk
3	017051	Sechskantschraube DIN 933 - M6x12 - 8.8	2.00	Stk
4	017086	Sechskantschraube DIN 933 - M8x20 - 8.8 - verzinkt	4.00	Stk
5	016721	Sechskantschraube DIN 933 - M8x16 - 8.8, schwarz	1.00	Stk
6	016553	Sperrzahnmutter M8 verzinkt	3.00	Stk
7	016565	Sperrzahnmutter M5 verzinkt	4.00	Stk
8	052197	Konsole AAT PW24-103	1.00	Stk
9	012508	Gleitlager-Bundbuchse	4.00	Stk
10	047545	Scheibe D25/16,2x1,5 verz.	6.00	Stk
11	031753	U-Scheibe DIN125 - M6 - A2	2.00	Stk
12	031755	U-Scheibe DIN 9021 - M8	2.00	Stk
13	047920	Flansch für Ascheaustragung BW35-60, PW24-103	2.00	Stk
14	031545	Gewindefurchende Sechskantschraube DIN 7500 - M5x12, verzinkt	4.00	Stk
15	031549	Sechskantschraube DIN 7500 - M6x12	4.00	Stk
16	052196	Stirnrad Schnecke PW24-103	2.00	Stk
18	050901	Schneckenmotor SPG 4,8 U/min	1.00	Stk
19	053412	Stirnrad Motor geh. M2 Z20	1.00	Stk
20	055728	Rillenkugellager - mit Bund F688 ZZ-8x16x5	4.00	Stk
21	055132	Passscheibe D14	8.00	Stk
22	018172	Zylinderschraube m. Innensechskant ISO 4762 - M 8 x 45 - 8.8 - verzinkt (DIN 912)	2.00	Stk
23	055916	Austragungsschnecke 2 PW72-103	2.00	Stk

Schnecken m. Antrieb (A000257)

Pos.	Artikelnr.	Bezeichnung	Menge	Einheit
23	055918	Austragungsschnecke 1 PW24-60	2.00	Stk
40	055945	Zwischenrad 1/2 kpl. AA PuroWIN	2.00	Stk

Ascheaustragung in Tonne (A000250)

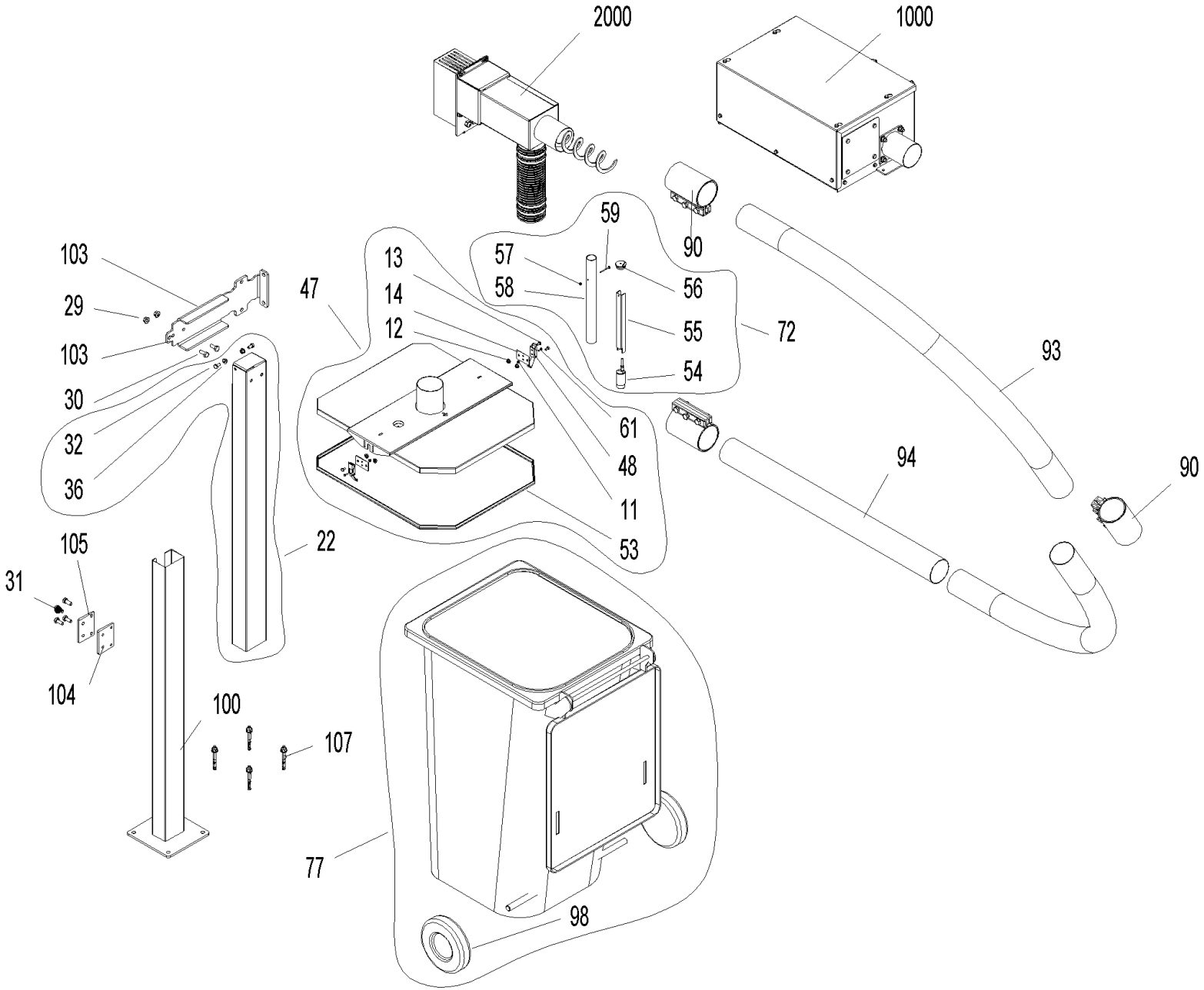

Ascheaustragung in Tonne (A000250)

Pos.	Artikelnr.	Bezeichnung	Menge	Einheit
11	016564	Sperrzahnmutter M4 verzinkt	2.00	Stk
12	016566	Sperrzahnmutter M6 verzinkt	4.00	Stk
13	015026	Sechskantschraube DIN 933 - M6x10 - 8.8 - verzinkt	4.00	Stk
14	055944	Einstellplatte De.	2.00	Stk
22	055942	Stütze oben Förderrohr	1.00	Stk
29	016567	Sperrzahnmutter M10 verzinkt	2.00	Stk
31	054526	Sechskantschraube DIN 933 - M10x25 - 8.8 - verzinkt	6.00	Stk
32	015134	Sechskantschraube DIN 933 - M8x16 - 8.8 - verzinkt	2.00	Stk
36	016553	Sperrzahnmutter M8 verzinkt	2.00	Stk
47	055510	PWZ Abdeckung Tonne zu Ascheaustragung	1.00	Stk
48	009546	Spannverschluss	2.00	Stk
53	053467	Dichtungsprofil Vorratsbehälter 200KG und Ascheaustragung in Tonne BW2, BW2T 10-33, BWL10-26, PW	1.00	Stk
54	006821	Näherungsschalter mit Anschlußkabel 2m	1.00	Stk
55	055035	Fixierung Näherungsschalter	1.00	Stk
56	051316	Stopfen GPN 300 F 242 gebohrt Ø5	1.00	Stk
57	016724	Sicherungsmutter DIN 985 - M 4 - 8 - verzinkt	1.00	Stk
58	046190	Einbringrohr Näherungsschalter PW Zuführung	1.00	Stk
59	016752	Sechskantschraube DIN 933 - M4x40 - 8.8 - verzinkt	1.00	Stk
61	055014	Sechskantschraube DIN 933 - M4x12 - 8.8 - verzinkt	2.00	Stk
72	056097	PWZ032 Überwachung Füllstand Aschetonne	1.00	Stk
77	055515	PWZ031 Aschetonne 240 Liter Stahl verzinkt (verstärkte Radausführung)	1.00	Stk
90	055513	PWZ Rohrkupplung DVK HD mit Erdungsband Nenn-Ø88,9, Baulänge 150 (EPDM-Dichtung,	3.00	Stk

Ascheaustragung in Tonne (A000250)

Pos.	Artikelnr.	Bezeichnung	Menge	Einheit
		Anzugsmoment max: 80Nm)		
93	055495	PWZ Rohrbogen 88,9 x R800 NIRO	2.00	Stk
94	055496	PWZ Rohr 90 x 1000mm	1.00	Stk
98	055943	Rad Aschetonne 240L	2.00	Stk
100	055750	Stütze unten Förderrohr	1.00	Stk
103	055743	Befestigung oben Förderrohr PW	1.00	Stk
104	055911	Klemmplatte hinten PW	1.00	Stk
105	055749	Klemmplatte Stützfuß PW	1.00	Stk
107	001594	Ankerbolzen FAZ II 10/ 10/ 95	4.00	Stk
1000	A000251	Aschesammelbehälter	1.00	Stk
2000	A000252	Übergabe in Tonne	1.00	Stk

Aschesammelbehälter (A000251)

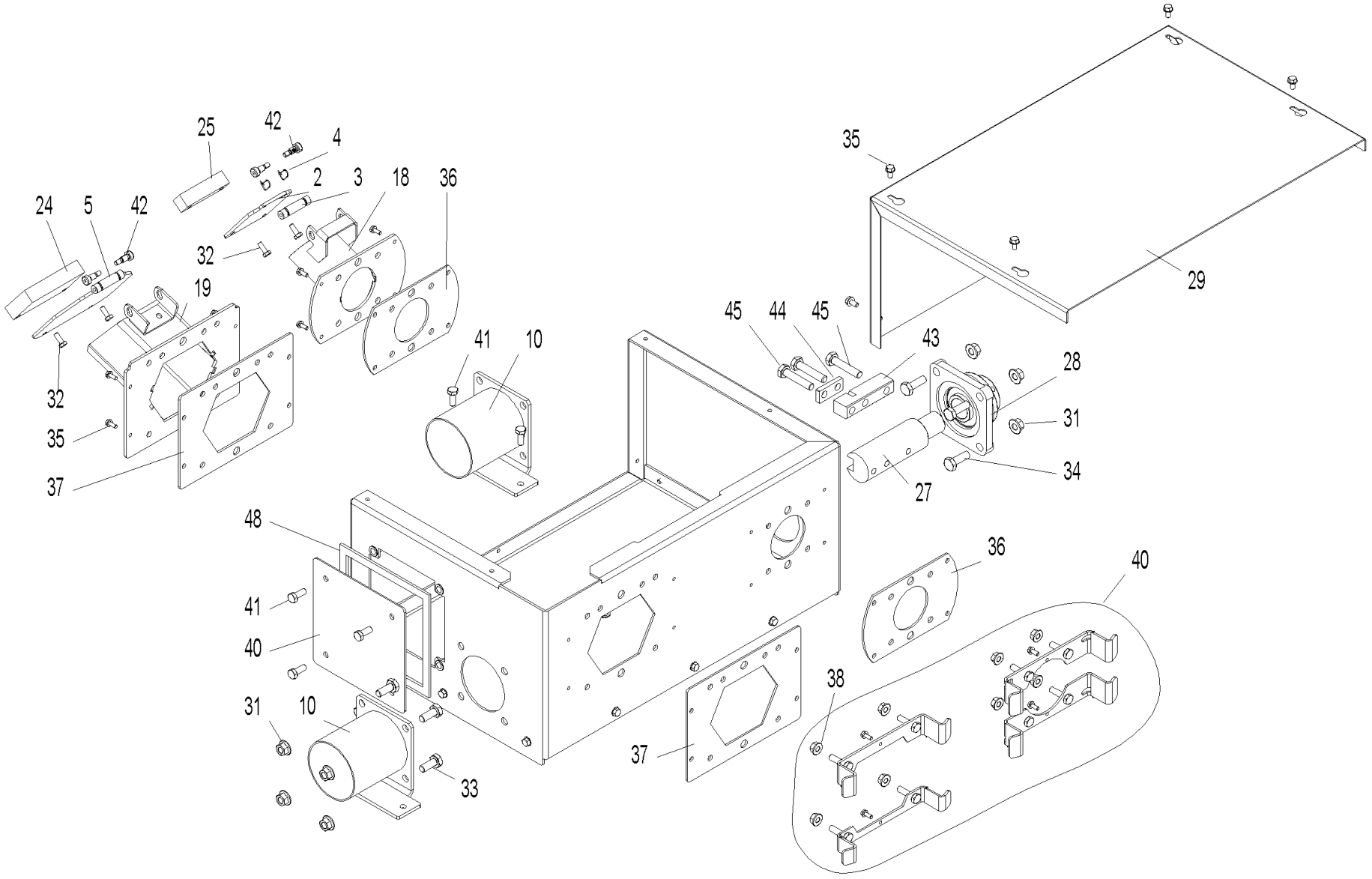

Aschesammelbehälter (A000251)

Pos.	Artikelnr.	Bezeichnung	Menge	Einheit
2	055521	Dichtklappe hinten Aschesammelbehälter PW	1.00	Stk
3	055524	Achse Klappe vorne Aschesammelbehälter PW	1.00	Stk
4	055737	Federbügelklammer Aschesammelbehälter PW	2.00	Stk
5	055676	Dichtklappe vorne Aschesammelbehälter PW	1.00	Stk
10	055680	Rohr Ausgang Aschesammelbehälter PW	1.00	Stk
18	055720	Auslassrohr hinten Aschesammelbehälter PW	1.00	Stk
19	055721	Auslassrohr vorne Aschesammelbehälter PW	1.00	Stk
24	055517	Gewicht Klappe vorne Aschesammelbehälter PW	1.00	Stk
25	055520	Gewicht Klappe hinten Aschesammelbehälter PW	1.00	Stk
27	055690	Welle hinten Schnecke Aschesammelbehälter PW	1.00	Stk
28	052859	Flanschlager mit Berührungsschutz Ø30 Bauhöhe 40,2; 4-Loch; UCF 206 FYH (staubdicht)	1.00	Stk
29	055692	Deckel Übergabe in Tonne Aschesammelbehälter PW	1.00	Stk
31	016567	Sperrzahnmutter M10 verzinkt	2.00	Stk
32	024759	Sechskantschraube DIN 933 - M6x16 - 8.8 - verzinkt	1.00	Stk
33	054526	Sechskantschraube DIN 933 - M10x25 - 8.8 - verzinkt	1.00	Stk
34	054269	Sechskantschraube DIN 933 - M10x30 - 8.8 - verzinkt	1.00	Stk
35	031549	Sechskantschraube DIN 7500 - M6x12	1.00	Stk
36	055710	Dichtung Ascheflansch hinten Aschesammelbehälter PW	1.00	Stk
37	055711	Dichtung Ascheflansch vorne Aschesammelbehälter PW	2.00	Stk
38	016553	Sperrzahnmutter M8 verzinkt	8.00	Stk
40	055704	Wartungsdeckel Asche Aschesammelbehälter PW	1.00	Stk
41	017086	Sechskantschraube DIN 933 - M8x20 - 8.8 - verzinkt	4.00	Stk

Aschesammelbehälter (A000251)

Pos.	Artikelnr.	Bezeichnung	Menge	Einheit
42	055736	Schulterpassschraube 12.9 - 6x12 / ISO 7379 (M6x12)	4.00	Stk
43	055712	Fixierung Schnecke Aschesammelbehälter PW	1.00	Stk
44	055718	Fixierung Schnecke oben Aschesammelbehälter PW	1.00	Stk
45	033099	Sechskantschraube DIN 933 - M10x50 - 8.8	6.00	Stk
48	054532	Dichtung Wartungsdeckel Vorratsbehälter/Aschesammelbehälter	1.00	Stk

Übergabe in Tonne (A000252)

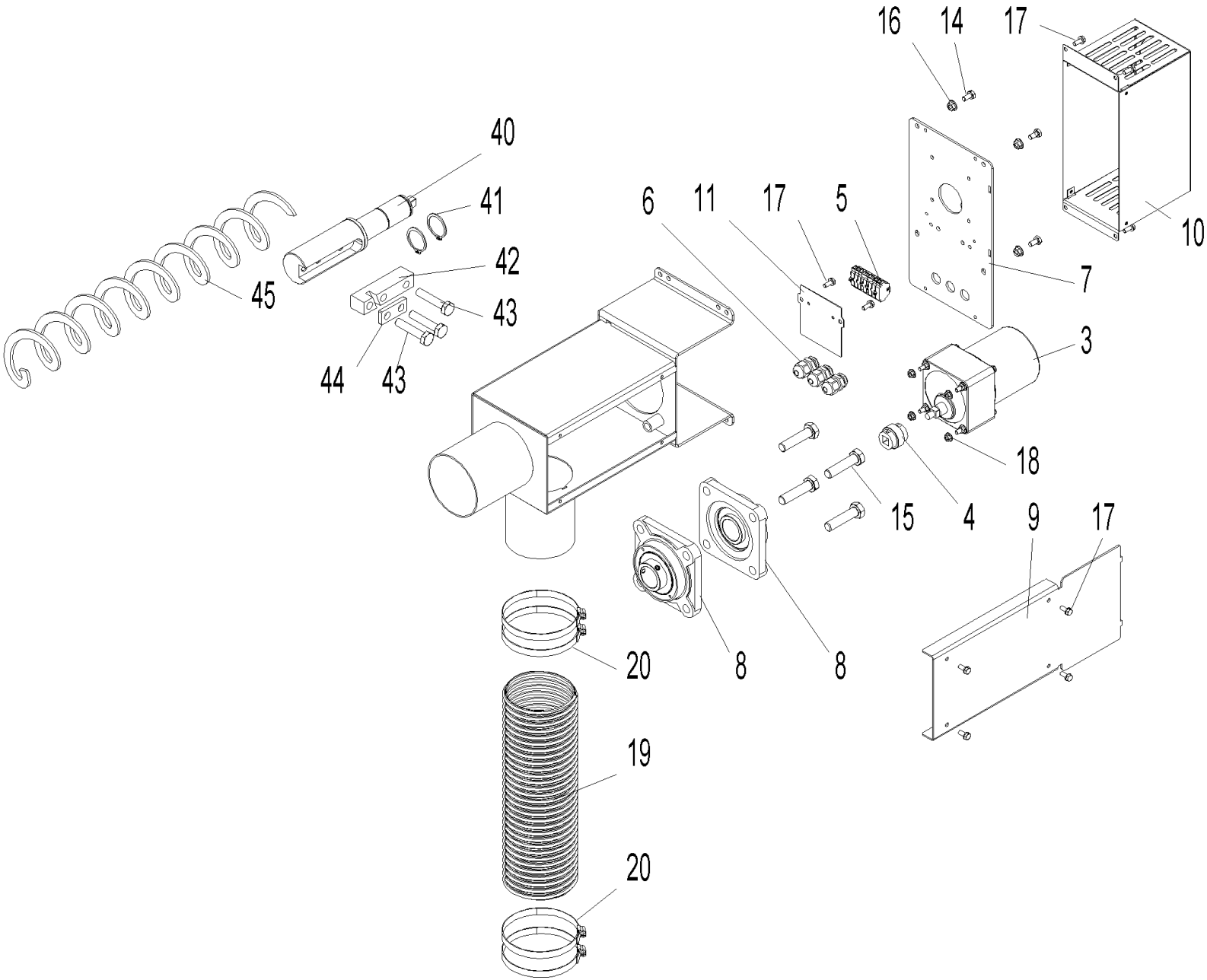

Übergabe in Tonne (A000252)

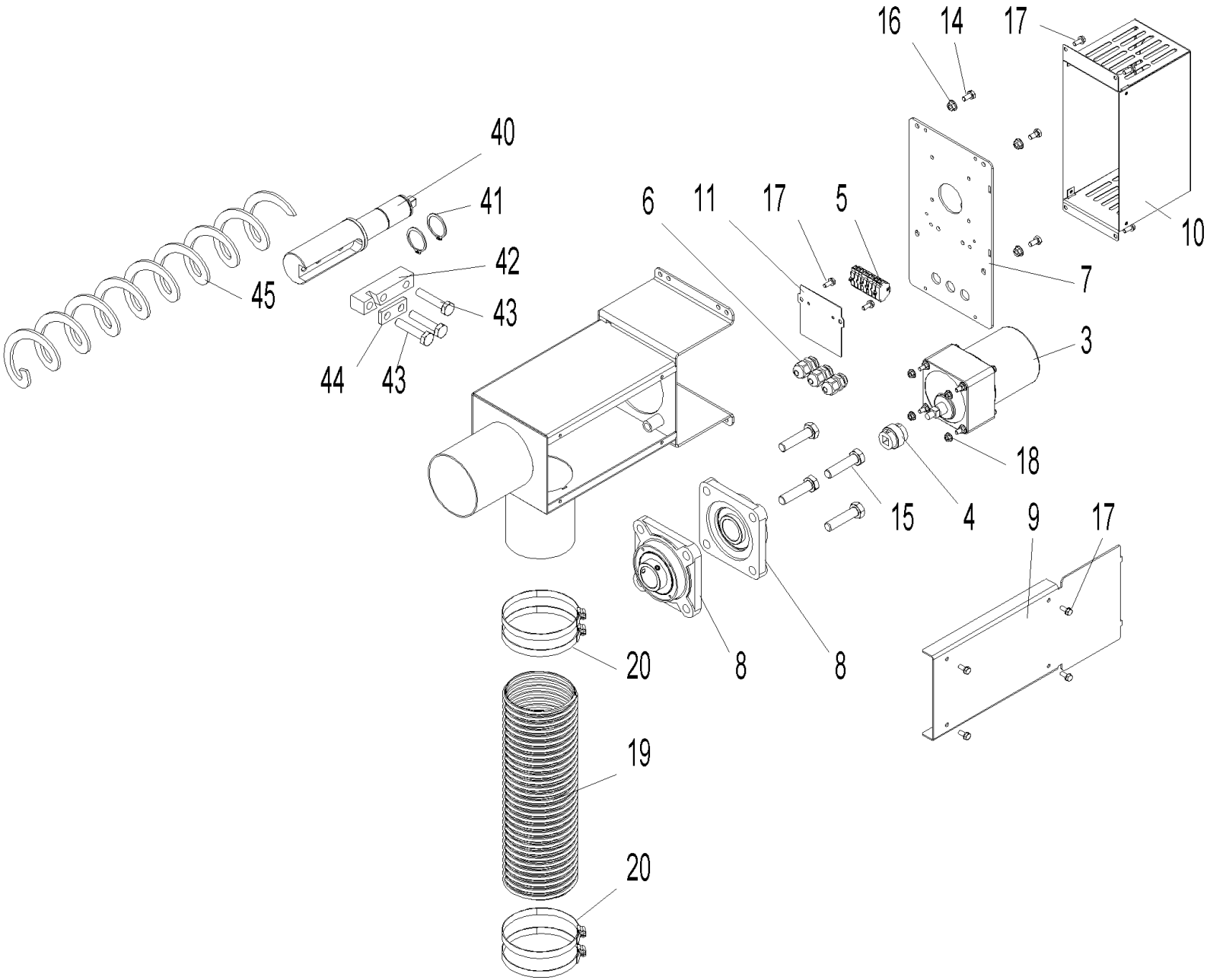

Übergabe in Tonne (A000252)

Pos.	Artikelnr.	Bezeichnung	Menge	Einheit
3	050901	Schneckenmotor SPG 4,8 U/min	1.00	Stk
4	055908	Kupplung 03 Übergabe Tonne PW	1.00	Stk
5	006921	Wagoblock 261 9-polig	1.00	Stk
6	006340	Kabelverschraubung	3.00	Stk
7	055507	Drehmomentenstütze Übergabe Tonne	1.00	Stk
8	052859	Flanschlager mit Berührungsschutz Ø30 Bauhöhe 40,2; 4-Loch; UCF 206 FYH (staubdicht)	2.00	Stk
9	055714	Deckel Übergabe Asche Tonne	1.00	Stk
10	055719	Berührungsschutz Motor Übergabe Tonne PW	1.00	Stk
11	055727	Halteplatte Wago Übergabe Tonne	1.00	Stk
14	017051	Sechskantschraube DIN 933 - M6x12 - 8.8	4.00	Stk
15	033099	Sechskantschraube DIN 933 - M10x50 - 8.8	4.00	Stk
16	016566	Sperrzahnmutter M6 verzinkt	4.00	Stk
17	031545	Gewindefurchende Sechskantschraube DIN 7500 - M5x12, verzinkt	10.00	Stk
18	016565	Sperrzahnmutter M5 verzinkt	4.00	Stk
19	055747	Hochtemperaturschlauch HTD Innen-Ø89mm (Bund mit 4 lfm.)	1.00	M
20	055748	Schlauchklemme (90 bis 100mm)	4.00	Stk
40	055502	Welle Schnecke Übergabe Tonne PW	1.00	Stk
41	055694	Sicherungsring DIN 471 - 30 x 1,5	1.00	Stk
42	055712	Fixierung Schnecke Aschesammelbehälter PW	1.00	Stk
43	033099	Sechskantschraube DIN 933 - M10x50 - 8.8	3.00	Stk
44	055718	Fixierung Schnecke oben Aschesammelbehälter PW	1.00	Stk
45	055508	PWZ Flexible Ascheschnecke (Länge = 5600mm +200/-50)	1.00	Stk

Zündung (A000158)

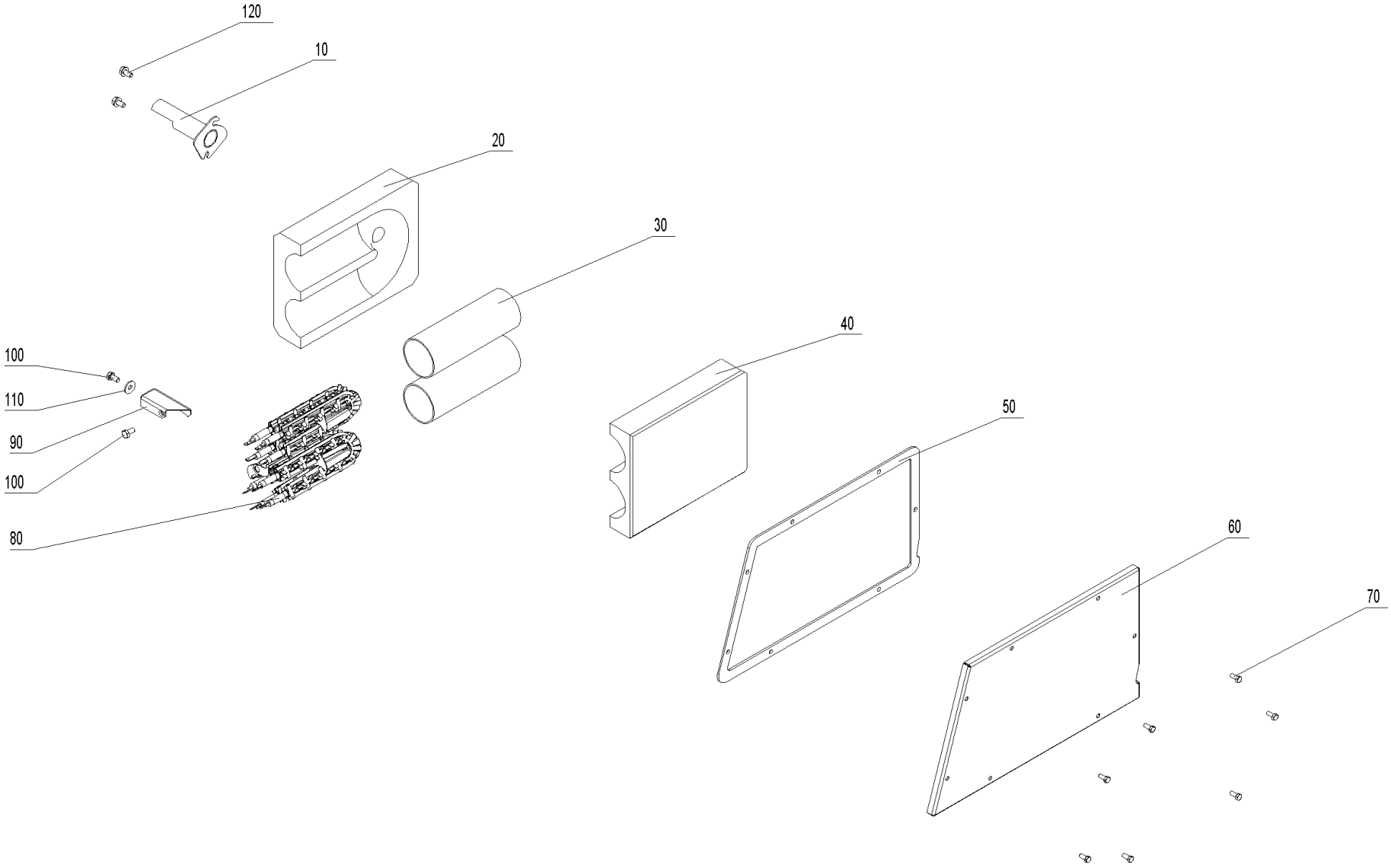

Zündung (A000158)

Pos.	Artikelnr.	Bezeichnung	Menge	Einheit
10	052716	Zündrohr PW24/30	1.00	Stk
10	053668	Zündrohr PW72-103	1.00	Stk
10	052766	Zündrohr PW40-60	1.00	Stk
20	052713	Isolierstein unten Zündung PW24-103	1.00	Stk
30	050489	Zündrohr Zündung LWP, PW24-103	2.00	Stk
40	007484	Isolierstein oben Zündung PW24-103	1.00	Stk
50	052993	Dichtung Zündung PW24-103	1.00	Stk
60	052717	Abdeckung Zündung PW24-103	1.00	Stk
70	017020	Sechskantschraube DIN 933 - M5x12 - A2	7.00	Stk
80	055201	Zündelement BW, FW ab Los15, VAE ab Los6, BWXL, LWK, BW2, BW2T, PW, BWL, BW2P	1.00	Stk
90	052387	Anschlag Zündung PW24-103	1.00	Stk
100	017051	Sechskantschraube DIN 933 - M6x12 - 8.8	2.00	Stk
110	031753	U-Scheibe DIN125 - M6 - A2	1.00	Stk
120	031549	Sechskantschraube DIN 7500 - M6x12	2.00	Stk

Luftregelung PL (A000159)

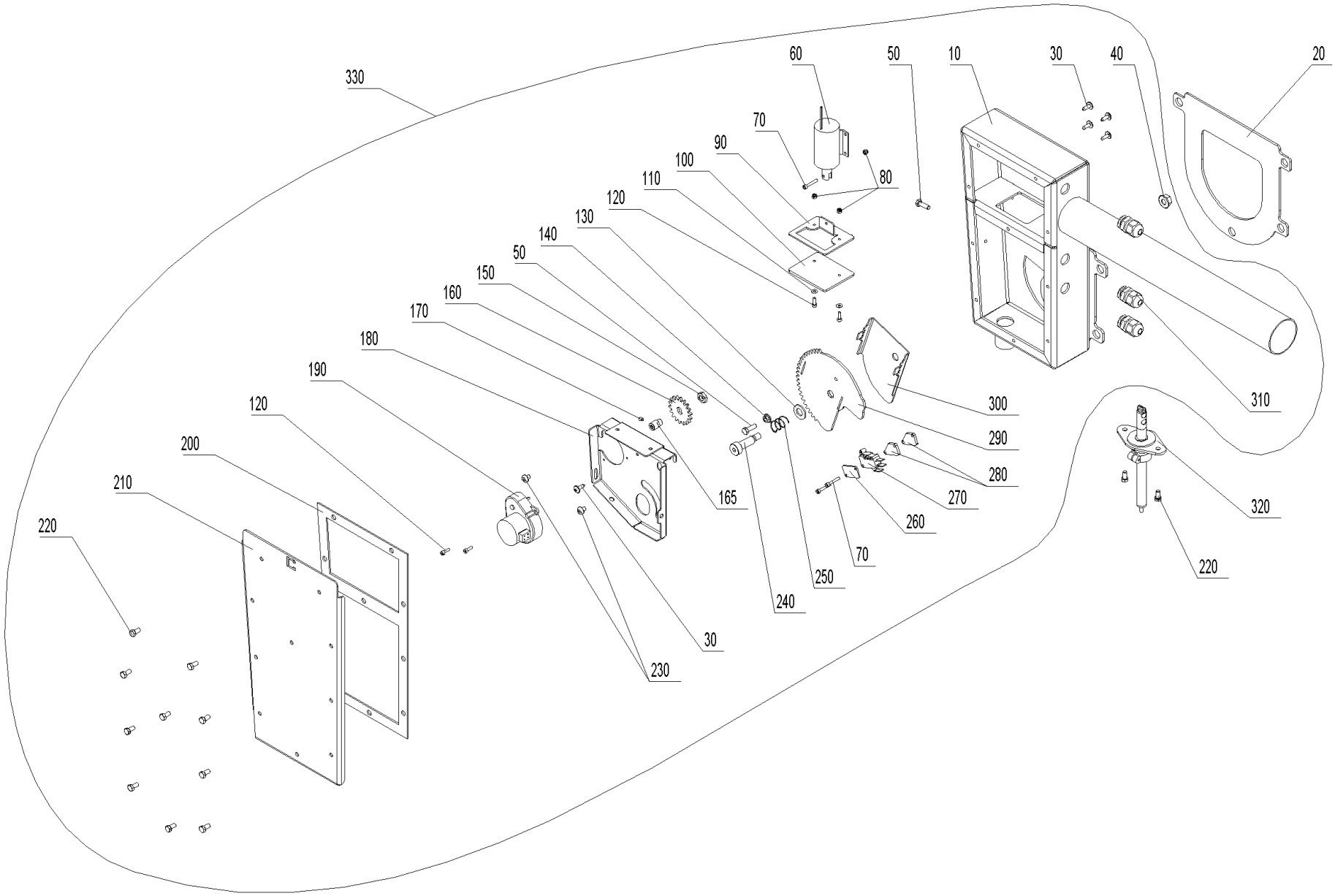

Luftregelung PL (A000159)

Pos.	Artikelnr.	Bezeichnung	Menge	Einheit
10	055783	Luftschacht P kpl. geschw. RAL 7021 schw. be.	1.00	Stk
20	052890	Dichtung Flansch Luftschacht PW24-103	1.00	Stk
30	018139	Zyl.-Schraube 4,2x13 m. U-Scheibe	5.00	Stk
40	016553	Sperrzahnmutter M8 verzinkt	1.00	Stk
50	015025	Sechskantschraube DIN 933 - M5x16 - 8.8 - verzinkt	2.00	Stk
60	052911	Zylindermagnet PW24-60	1.00	Stk
70	016769	Zyl.-Schraube M3x20 verzinkt mit KS. DIN 7985 A Form H	3.00	Stk
80	016725	Sicherungsmutter DIN 985 - M 3 - 8 - verzinkt	3.00	Stk
90	052885	Absperrplatte PW24-103	1.00	Stk
100	052886	Dichtung Absperrplatte PW24-103	1.00	Stk
110	021474	U-Scheibe DIN 134 - M3 - verzinkt	2.00	Stk
120	052828	Zylinderschraube m. Innensechskant ISO 4762 - M 3 x 10 - 8.8 - verzinkt (DIN 912)	4.00	Stk
130	018058	U-Scheibe DIN 125 - M10	1.00	Stk
140	016565	Sperrzahnmutter M5 verzinkt	1.00	Stk
150	016659	Mutter DIN439 - M 8	1.00	Stk
160	055776	Stirnrad M2 Z18 TK36	1.00	Stk
165	056043	Stirnradbef. verz. schwarz chr.	1.00	Stk
170	054158	Gewindestifte mit ISK und Kegelkuppe ISO4026/DIN 913 M 5X 20 Edelstahl A2	1.00	Stk
180	055789	Konsole Stellmotor PL	1.00	Stk
190	095690	Luftklappen-Motor 1 U/min Crozet PuroWIN	1.00	Stk
200	055791	Di. De. Primärluftregelung	1.00	Stk
210	055792	De. Primärluftr. RAL7021 schw. be.	1.00	Stk

Luftregelung PL (A000159)

Pos.	Artikelnr.	Bezeichnung	Menge	Einheit
220	016756	SKT-Flanschschraube KL100 M5x10 vz. mit Sperr-Rippen unter dem Flansch, Gewinde bis Kopf, Oberflächengehärtet	12.00	Stk
230	016768	Linsenschraube mit Innensechskant, M3x5 verz.,	2.00	Stk
240	055777	Pass - Schulterschraube D10x25 ISO7379	1.00	Stk
250	053997	Druckfeder PW24-60	1.00	Stk
260	051044	Platte Mikroschalter PW24-60	1.00	Stk
270	009277	Mikroschalter mit Rollenhebel VAE, BW, BW2, LWP, LWK, LWPT, PW24-103	1.00	Stk
280	056070	Platte Mikroschalter 3mm	2.00	Stk
290	055787	Stirnrad PL	1.00	Stk
300	055784	Luftklappe PL	1.00	Stk
310	006340	Kabelverschraubung	3.00	Stk
320	052878	Strömungsmessumformer PW24-103	1.00	Stk
330	056250	Primärluftkasten kpl. PW24-103	1.00	Stk

Schaltfeld (A000160)

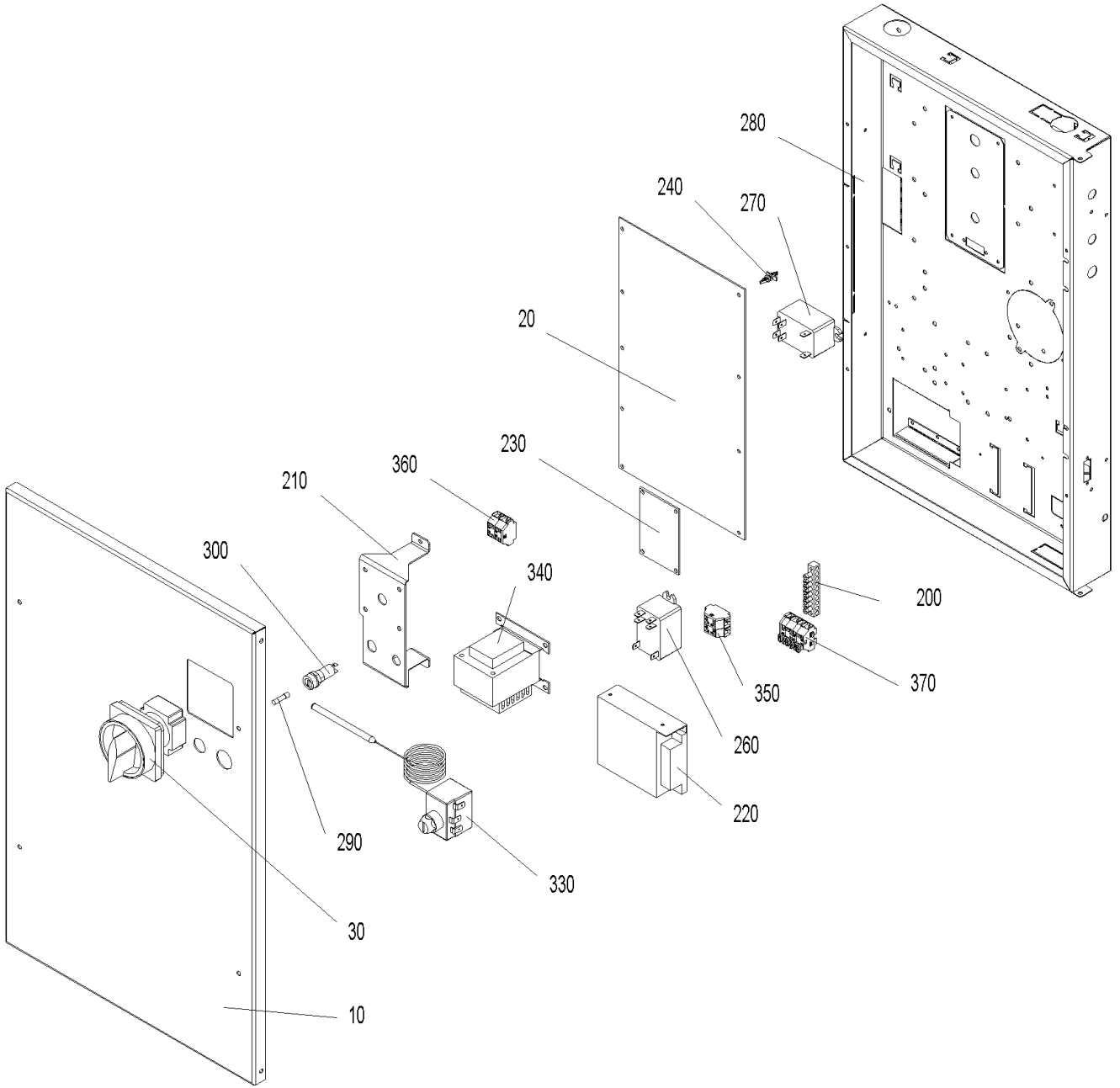

Schaltfeld (A000160)

Pos.	Artikelnr.	Bezeichnung	Menge	Einheit
10	053289	Deckel Schaltfeld PW24-103	1.00	Stk
20	012007	Feuerungsautomat PW24-103	1.00	Stk
30	012010	Hauptschalter 2polig 16 A PW24-103	1.00	Stk
40	013840	Kabel Nr.: 250 230V-Versorgung Fu`s + FA2 PW24-103	1.00	Stk
50	013841	Kabel Nr.: 251 Ascheaustragung PW24-103	1.00	Stk
60	013850	Kabel Nr.: 259 Position Ascheschieber + Schalter Überfüllung PW24-103	1.00	Stk
70	013851	Kabel Nr.: 260 Position Glutbettschieber + Level Controll PW24-103	1.00	Stk
80	013842	Kabel Nr.: 252 Heizflächenreinigung PW24-103	1.00	Stk
90	013843	Kabel Nr.: 253 LON Elektrikeranschluß PW24-103	1.00	Stk
100	013844	Kabel Nr.: 254 LON FA2 + STB PW24-103	1.00	Stk
110	013845	Kabel Nr.: 255 Motor Ascheschieber PW24-103	1.00	Stk
120	013847	Kabel Nr.: 256 Motor Glutbettschieber PW24-103	1.00	Stk
130	013848	Kabel Nr.: 257 ModBUS Steigschnecke PW24-103	1.00	Stk
140	013849	Kabel Nr.: 258 Netz + Heizungsnotschalter PW24-103	1.00	Stk
145	053326	Kabel Primärzündung PW24-103	1.00	Stk
150	013852	Kabel Nr.: 261 Saugzuggebläse PW24-103	1.00	Stk
160	013853	Kabel Nr.: 262 Sekundärluftklappe PW24-103	1.00	Stk
170	013855	Kabel Nr.: 263 Sekundärzündung PW24-103	1.00	Stk
180	013856	Kabel Nr.: 264 Türschalter kpl. PW24-103	1.00	Stk
190	013857	Kabel Nr.: 265 Versorgung ModBUS FU`s+FA2 PW24-103	1.00	Stk
200	009929	Klemmschiene MS 8x8mm 8pol.+Befestigungsbohrungen	1.00	Stk
210	053984	Konsole Hauptschalter PW24-60	1.00	Stk

Schaltfeld (A000160)

Pos.	Artikelnr.	Bezeichnung	Menge	Einheit
220	002054	Netzteil 12V, 4,2A Type LRS-50-12	1.00	Stk
230	012014	Platine - Relais PW24-103	1.00	Stk
240	007609	Platinenhalter CBS-4N spitz VAE, FW, BW10-26, BWXL, BW2, BW2T, LWPT, PW24-103, BWL	1.00	Stk
250	007620	Rauchgasfühler PT1000 (Länge 1100mm) BW2, BW2T, PW24-103, BWL, BW2P	1.00	Stk
260	005075	Relais 16A AC 2 polig 12V DC Steuerung	1.00	Stk
270	005025	Relais, Schließer 30A/250V AC , OMRON G7L-2A-BUB PMX, BW10-26, FW, VAE, BWXL, LWK, PW24-103	1.00	Stk
290	003228	Sicherung 6,3A	1.00	Stk
300	055193	ET-Set: Sicherungshalter f. Feinsicherung inkl. Umbauanleitung JW	1.00	Stk
310	502186	MES009M Tauchfühler ZTF 222 (Boiler-/Kessel-/Pufferfühler) für MES, Länge: 2,5m	1.00	Stk
320	007626	Thermoelement 2AB NM30/110 mm TI/DI 2AB25 2,5 (Brennkammer- bzw. Thermocontrollfühler)	1.00	Stk
330	005672	Sicherheitsthermostat VAE, LWK, BW2, BW2T, LWPT, PW24-103, BWL, BW2P Schaltpunkt:100 C +0/-6 Fühlerl.isol.; bei EW/JW ab 05/2017 (	1.00	Stk
340	007096	Trafo O2-Sonde 18VA LWP18-50, LWK, LWPT, PW24-103	1.00	Stk
350	006834	Wagoblock 261 4-polig "Sicherheit 1-4" (2xblau/2xgrau) VAE, FW, BW2, BW2T, LWPT, PW24-103, BWL	1.00	Stk
360	006833	Wagoblock 261 4-polig "12V GND" VAE, FW, BW2, BW2T, LWPT, PW24-103, BWL	1.00	Stk
370	007656	Wagoblock 261 XS 1-6 BW2, PW24-103	1.00	Stk
380	018140	Zylinder Schraube 4,2x13m unt.Scheibe DIN 7981 stumpf	1.00	Stk

Luftregelung SL/TL (A000231)

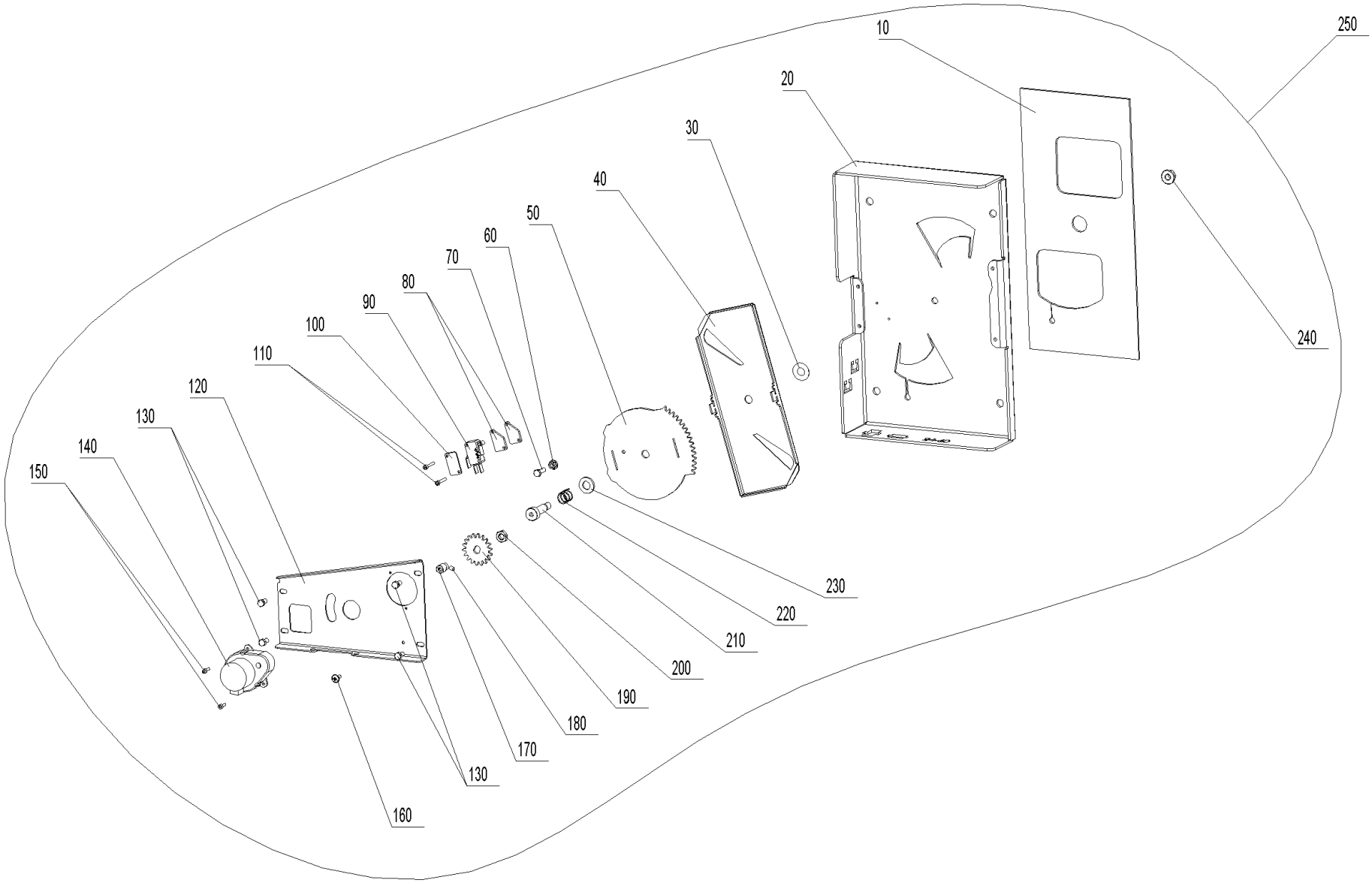

Luftregelung SL/TL (A000231)

Pos.	Artikelnr.	Bezeichnung	Menge	Einheit
10	055559	Dichtung Luftregelung S/T PW72-103	1.00	Stk
20	055772	Konsole Luftregelung S/T PW72-100	1.00	Stk
30	056042	Distanzscheibe 10x16x0,2 A2 DIN988	1.00	Stk
40	055773	Luftklappe S/T	1.00	Stk
50	055775	Stirnrad S/T	1.00	Stk
60	016565	Sperrzahnmutter M5 verzinkt	1.00	Stk
70	015025	Sechskantschraube DIN 933 - M5x16 - 8.8 - verzinkt	1.00	Stk
80	056070	Platte Mikroschalter 3mm	2.00	Stk
90	009277	Mikroschalter mit Rollenhebel VAE, BW, BW2, LWP, LWK, LWPT, PW24-103	1.00	Stk
100	051044	Platte Mikroschalter PW24-60	1.00	Stk
110	016769	Zyl.-Schraube M3x20 verzinkt mit KS. DIN 7985 A Form H	2.00	Stk
120	055779	Bef. Stellmotor S/T	1.00	Stk
130	016756	SKT-Flanschschraube KL100 M5x10 vz. mit Sperr-Rippen unter dem Flansch, Gewinde bis Kopf, Oberflächengehärtet	4.00	Stk
140	095690	Luftklappen-Motor 1 U/min Crozet PuroWIN	1.00	Stk
150	052828	Zylinderschraube m. Innensechskant ISO 4762 - M 3 x 10 - 8.8 - verzinkt (DIN 912)	2.00	Stk
160	018140	Zylinder Schraube 4,2x13m unt.Scheibe DIN 7981 stumpf	1.00	Stk
170	056043	Stirnradbef. verz. schwarz chr.	1.00	Stk
180	054158	Gewindestifte mit ISK und Kegelkuppe ISO4026/DIN 913 M 5X 20 Edelstahl A2	1.00	Stk
190	055776	Stirnrad M2 Z18 TK36	1.00	Stk
200	016659	Mutter DIN439 - M 8	1.00	Stk
210	055777	Pass - Schulterschraube D10x25 ISO7379	1.00	Stk
220	053997	Druckfeder PW24-60	1.00	Stk

Luftregelung SL/TL (A000231)

Pos.	Artikelnr.	Bezeichnung	Menge	Einheit
230	018058	U-Scheibe DIN 125 - M10	1.00	Stk
240	016553	Sperrzahnmutter M8 verzinkt	1.00	Stk
250	055780	Luftregelung - Sekundär PW72-103	1.00	Stk

Heizflächenreinigung (A000232)

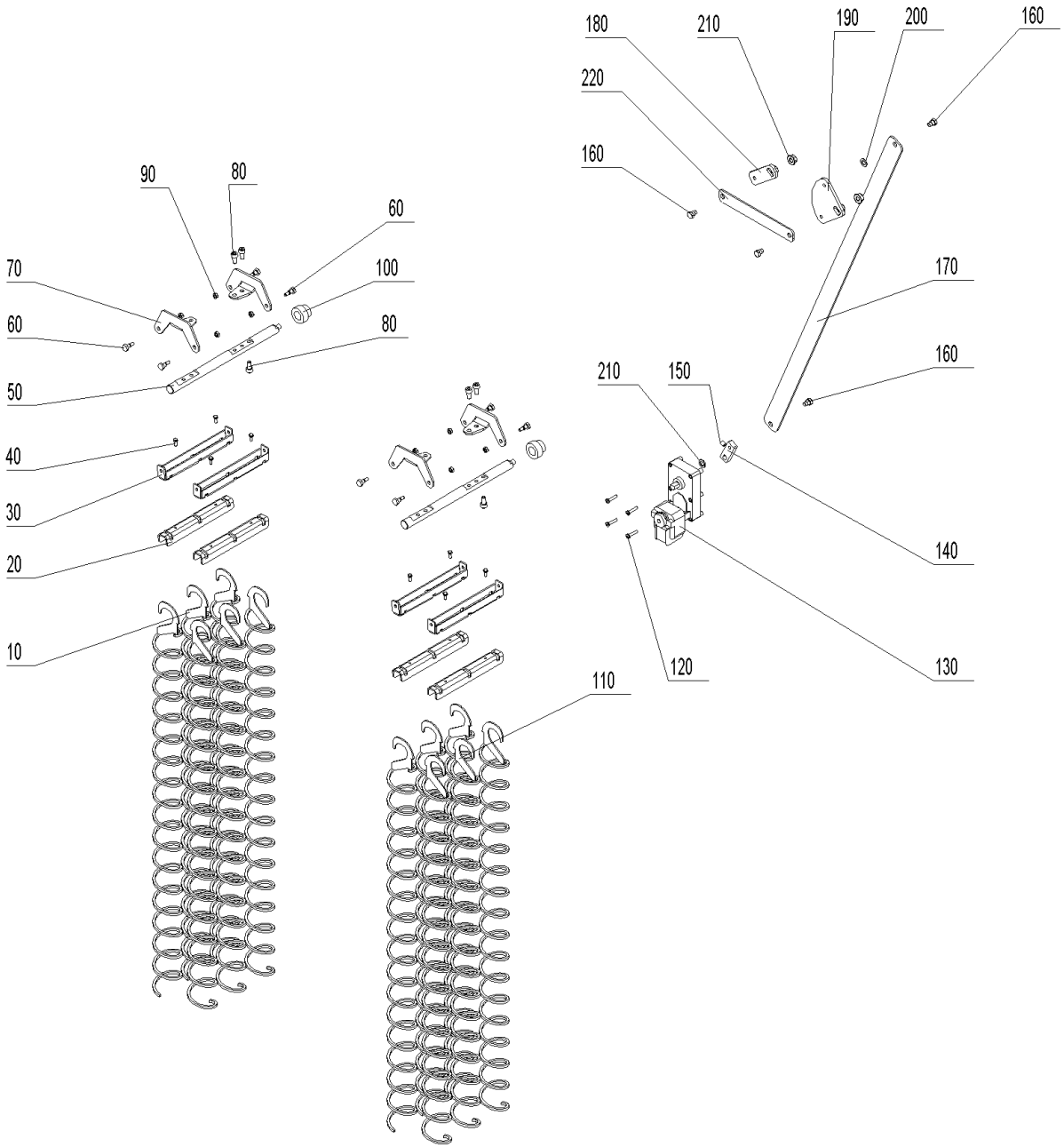

Heizflächenreinigung (A000232)

Pos.	Artikelnr.	Bezeichnung	Menge	Einheit
10	055556	Reinigungsschnecke links PW40-60 (Fallzug), PW72-103 (10x3 - Steig- u. Fallzug)	18.00	Stk
20	047065	Reinigungsprofil unten	6.00	Stk
30	047064	Reinigungsprofil oben	6.00	Stk
40	017020	Sechskantschraube DIN 933 - M5x12 - A2	12.00	Stk
50	053689	Welle für Heizflächenreinigung PW72-103	3.00	Stk
60	006756	Schraube Heizflächenreinigung M6	12.00	Stk
70	052738	Lagerarm für Heizflächenreinigung PW24-103	6.00	Stk
80	053102	Zylinderschraube m. Innensechskant ISO 4762 - M 8 x 16 - A4 (DIN 912)	15.00	Stk
90	016596	Mutter DIN 934 - M6 - A2	12.00	Stk
100	047416	Lager Heizflächenreinigung BWXL 35-60, PW24-103	3.00	Stk
120	016837	Zylinderschraube DIN 7985 M5x25 verz.m.KS	4.00	Stk
130	044665	Motor Ascheaustragung/ Heizflächenreinigung PMX15, BWE10-60, BW2, BW2T, PW, BWL, BW2P	1.00	Stk
140	053282	Rüttelhebel Motor HFR PW24-103	1.00	Stk
150	033112	Gewindestift DIN916 - M8x10-45H (mit Ringschneide)	1.00	Stk
160	012502	Ansatzschraube M8 x 6.5 verzinkt Ansatz D10 SW13	5.00	Stk
170	053284	Verbindung Heizflächenreinigung PW24-103	1.00	Stk
180	053281	Achsenhebel links HFR PW24-103	2.00	Stk
190	053280	Achsenhebel rechts HFR PW24-103	1.00	Stk
200	018031	Scheibe ISO 7092 - 10 - blank	1.00	Stk
210	016567	Sperrzahnmutter M10 verzinkt	3.00	Stk
220	053691	Verbinder Rüttelachse HFR PW72-103	1.00	Stk

PuroWIN 99 (A000226_3)

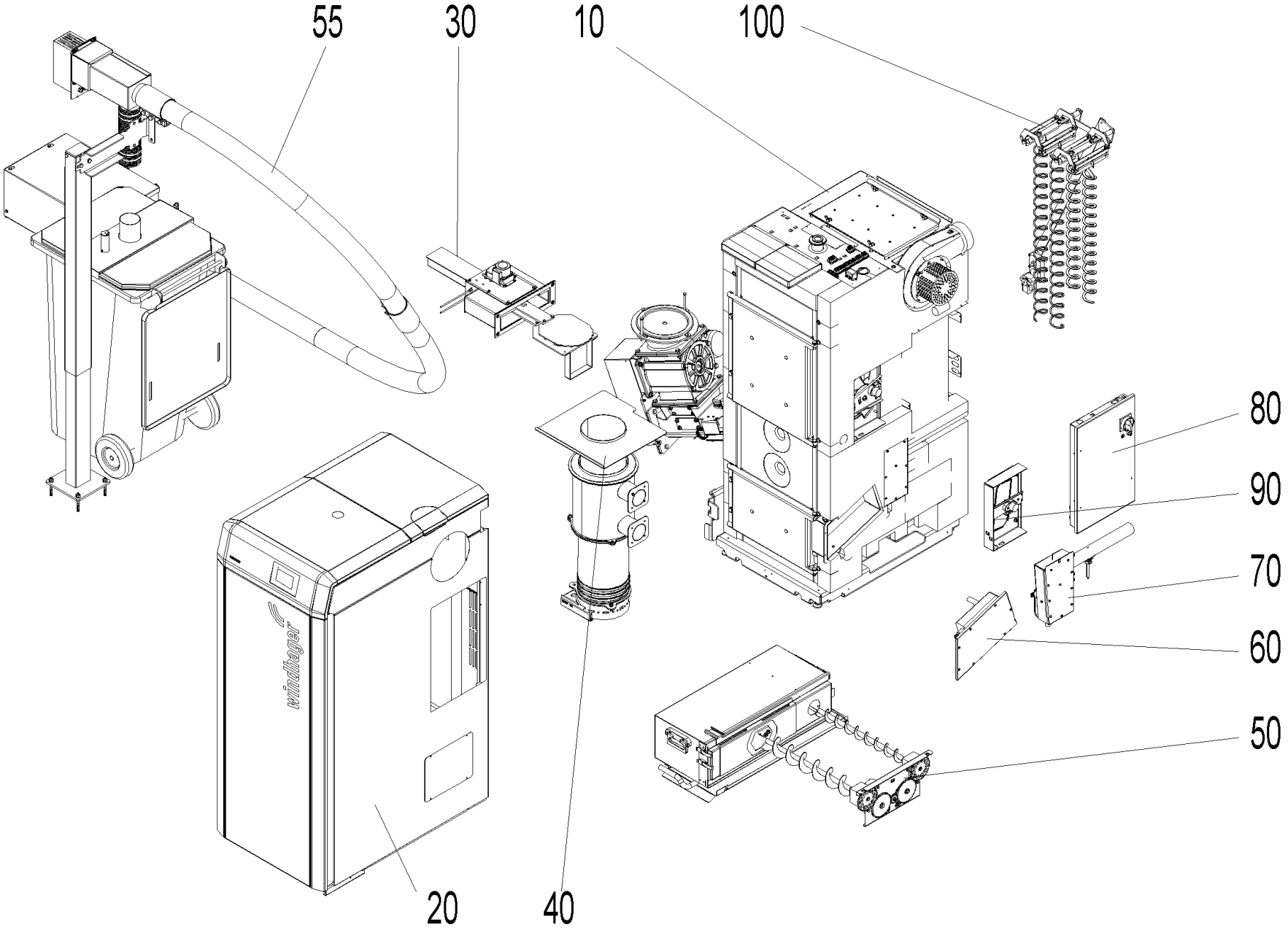

PuroWIN 99 (A000226_3)

Pos.	Artikelnr.	Bezeichnung	Menge	Einheit
10	A000227	Kessel	1.00	Stk
20	A000228	Verkleidung	1.00	Stk
30	A000229	Entaschung	1.00	Stk
40	A000230	Brennkammer	1.00	Stk
50	A000154	Ascheaustragung	1.00	Stk
55	A000250	Ascheaustragung in Tonne	1.00	Stk
60	A000158	Zündung	1.00	Stk
70	A000159	Luftregelung PL	1.00	Stk
80	A000160	Schaltfeld	1.00	Stk
90	A000231	Luftregelung SL/TL	1.00	Stk
100	A000232	Heizflächenreinigung	1.00	Stk

Kessel (A000227)

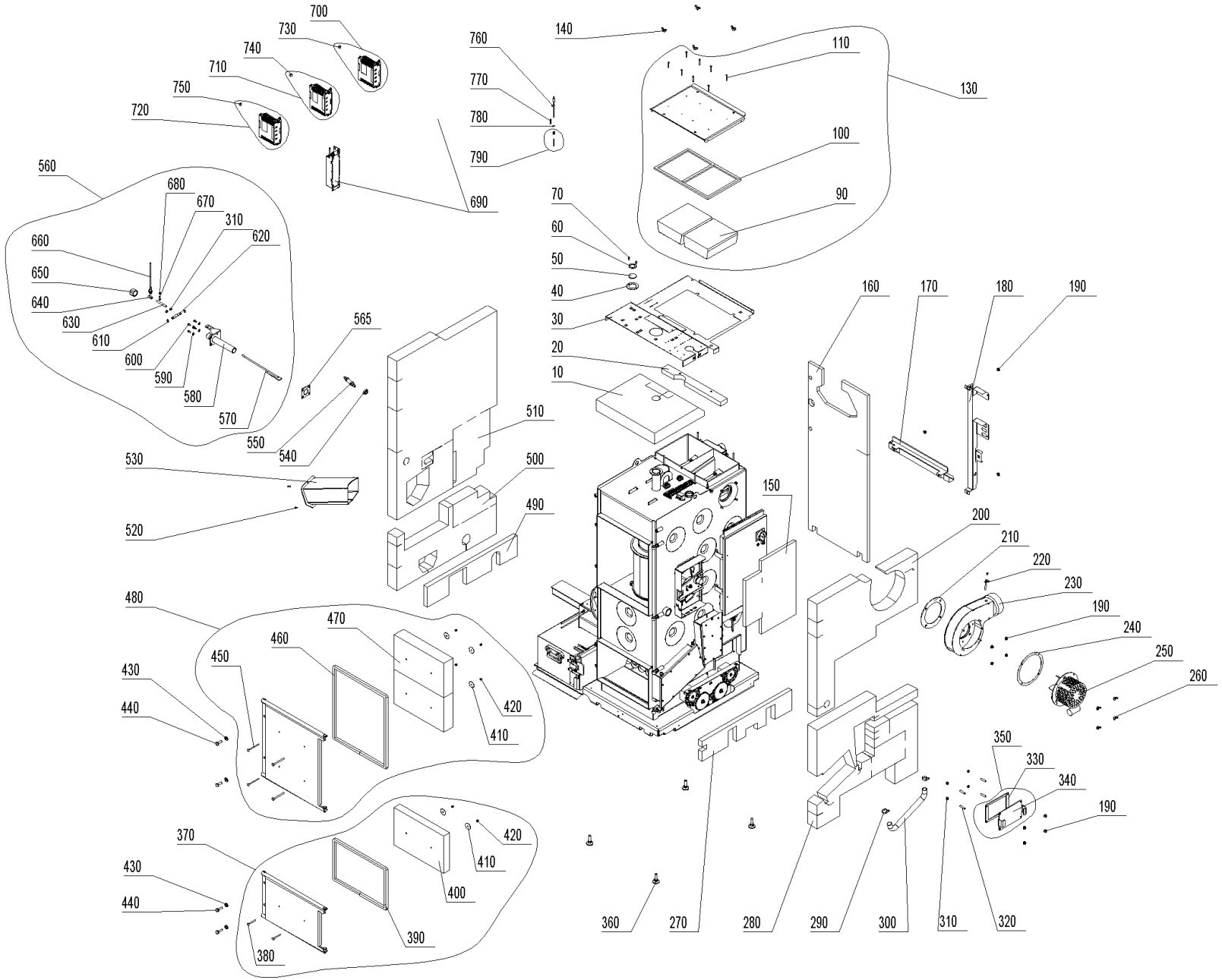

Kessel (A000227)

Pos.	Artikelnr.	Bezeichnung	Menge	Einheit
10	053835	Isolierung oben PW72-103	1.00	Stk
20	053836	Isolierung oben hinten PW72-103	1.00	Stk
30	053837	Isolierabdeckung oben PW72-103	1.00	Stk
40	051712	Dichtung Schauloch PW24-103	1.00	Stk
50	000307	Glasscheibe Ø 45/4 PW24-103	1.00	Stk
60	087300	Rosette Schauloch PW24-103	1.00	Stk
70	031545	Gewindefurchende Sechskantschraube DIN 7500 - M5x12, verzinkt	2.00	Stk
90	053657	Isolierstein NHF rechts PW72-103	1.00	Stk
90	053656	Isolierstein NHF links PW72-103	1.00	Stk
100	053658	Dichtschnur Reinigungsdeckel PW72-103	1.00	Stk
110	016719	Linsen-Bohrschraube DIN 7504N - 4,2x38	8.00	Stk
130	055811	Reinigungsdeckel mont. PW72-103	1.00	Stk
140	019414	Flügelmutter ähnl. DIN 315 - M8 - St - verzinkt	4.00	Stk
150	053839	Isolierung Schaltfeld PW72-103	1.00	Stk
160	053846	Isolierung hinten oben PW72-103	1.00	Stk
170	052996	Kabelschacht unten PW24-103	1.00	Stk
180	052704	Kabelschacht senkrecht PW24-103	1.00	Stk
190	016553	Sperrzahnmutter M8 verzinkt	11.00	Stk
200	053844	Isolierung rechts oben PW72-103	1.00	Stk
210	054947	Sekundärluftdichtung mitte 1	1.00	Stk
220	041498	Schutzrohr Rauchgasfühler	1.00	Stk
230	055812	Gebläsekasten PW72-103	1.00	Stk

Kessel (A000227)

Pos.	Artikelnr.	Bezeichnung	Menge	Einheit
250	006241	Motor Saugzuggebläse PW72-103	1.00	Stk
260	019410	Flügelmutter DIN315 - M6	6.00	Stk
270	053840	Isolierung rechts innen PW72-103	1.00	Stk
280	053845	Isolierung rechts unten PW72-103	1.00	Stk
290	029424	IDEAL-Schlauchklemmen 20-32mm	2.00	Stk
300	052989	Schlauch Silikon SG1M PW24-103	1.00	Stk
310	031154	Mutter DIN934 - M8 - A4	4.00	Stk
320	016163	Gewindestift DIN913 - M8x40-A2	4.00	Stk
330	047190	Dichtung Abdeckblech PW24-103	1.00	Stk
340	047188	Abdeckblech PW24-103	1.00	Stk
350	047991	Deckel für Nachheizflächen unten BW XL, PW24-103	1.00	Stk
360	009994	Stellfuß	4.00	Stk
370	055813	Aschetür mont. PW72-103	1.00	Stk
380	016190	Flachrundschraube M6x90	2.00	Stk
390	053672	Dichtschnur Aschetür PW72-103	1.00	Stk
400	053831	Isolierstein Aschetür PW72-103	1.00	Stk
410	016191	Karosserie Scheibe M6 A2 6,4x40x1,5	6.00	Stk
420	016192	Hutmutter hohe Form DIN1587 - M6 A2	6.00	Stk
430	017183	U-Scheibe DIN125 - M12	4.00	Stk
440	017865	Sechskantschraube M12x35 - 8.8	4.00	Stk
450	016190	Flachrundschraube M6x90	4.00	Stk
460	053660	Dichtschnur Heiztür PW72-103	1.00	Stk

Kessel (A000227)

Pos.	Artikelnr.	Bezeichnung	Menge	Einheit
470	053661	Isolierstein Heiztür PW72-103	2.00	Stk
480	055814	Heiztür mont. PW72-103	1.00	Stk
490	053841	Isolierung links innen PW72-103	1.00	Stk
500	053843	Isolierung links unten PW72-103	1.00	Stk
510	053842	Isolierung links PW72-103	1.00	Stk
520	020095	Linsensenkschraube TT, DIN 7500ME M5x16 verz.	2.00	Stk
530	053674	Schneckenrohr kpl. PW72-103	1.00	Stk
540	007094	Isolierring Lambdasonde	1.00	Stk
550	051646	Lambdasonde NGK inkl. Kabel	1.00	Stk
560	053680	Level Control montiert PW72-103	1.00	Stk
565	053551	Dichtung Deckel Entaschung PW72-103	1.00	Stk
570	053683	Fühler kpl. PW72-103	1.00	Stk
580	052734	Level Controll Rohr kpl. PW24/30, PW72-103	1.00	Stk
590	020540	U-Scheibe DIN 134 - M6	4.00	Stk
600	017051	Sechskantschraube DIN 933 - M6x12 - 8.8	4.00	Stk
610	052174	Sicherungsring DIN 471 - 12 X 1	2.00	Stk
620	052099	Level Controll Achse PW24-103	1.00	Stk
630	017032	Gewindebolzen M8x80 verzinkt	1.00	Stk
640	048554	Verlängerungsmutter M8	1.00	Stk
650	008850	Kappe Nr. 300, 1" schwarz	1.00	Stk
660	007657	Näherungsschalter M12 induktiv PW24-103	1.00	Stk
670	015471	Sechskantschraube DIN 933 - M6x20 - 8.8 - verzinkt	1.00	Stk

Kessel (A000227)

Pos.	Artikelnr.	Bezeichnung	Menge	Einheit
680	016594	Mutter DIN 934 - M6 - 8 - verzinkt	1.00	Stk
690	054185	Filter zu FU, 0,75kW, 1-Phase	2.00	Stk
700	055837	ET-SET: FU mit Eprom TANK 100 zu Zuführung pneumatisch PW72-103 zu Motor Lenze	1.00	Stk
710	054847	ET-SET: FU mit Eprom RAS zu Zuführung direkt PW24-103 zu Motor Lenze	1.00	Stk
720	054849	ET-SET: FU mit Eprom TANK zu Zuführung pneumatisch PuroWIN	1.00	Stk
730	054197	Eprom auf STOK program. zu FU PuroWIN Zuführung direkt / pneumatisch zu Motor Lenze	1.00	Stk
740	054196	Eprom RAS program. zu FU PuroWIN Zuführung direkt zu Motor Lenze	1.00	Stk
750	055838	Eprom auf TANK 100 program. zu FU PuroWIN 72-103 Zuführung pneumatisch zu Motor Lenze	1.00	Stk
760	007626	Thermoelement 2AB NM30/110 mm TI/DI 2AB25 2,5 (Brennkammer- bzw. Thermocontrollfühler)	1.00	Stk
770	050647	Feder Brennkammer-Fühler	1.00	Stk
780	031274	Öse M6	1.00	Stk
790	051069	Schutzrohr BK-Fühler kpl.	1.00	Stk
800	009185	Netzfilter FN2020-10-06 PW24-103	1.00	Stk
810	016594	Mutter DIN 934 - M6 - 8 - verzinkt	1.00	Stk

Verkleidung (A000228)

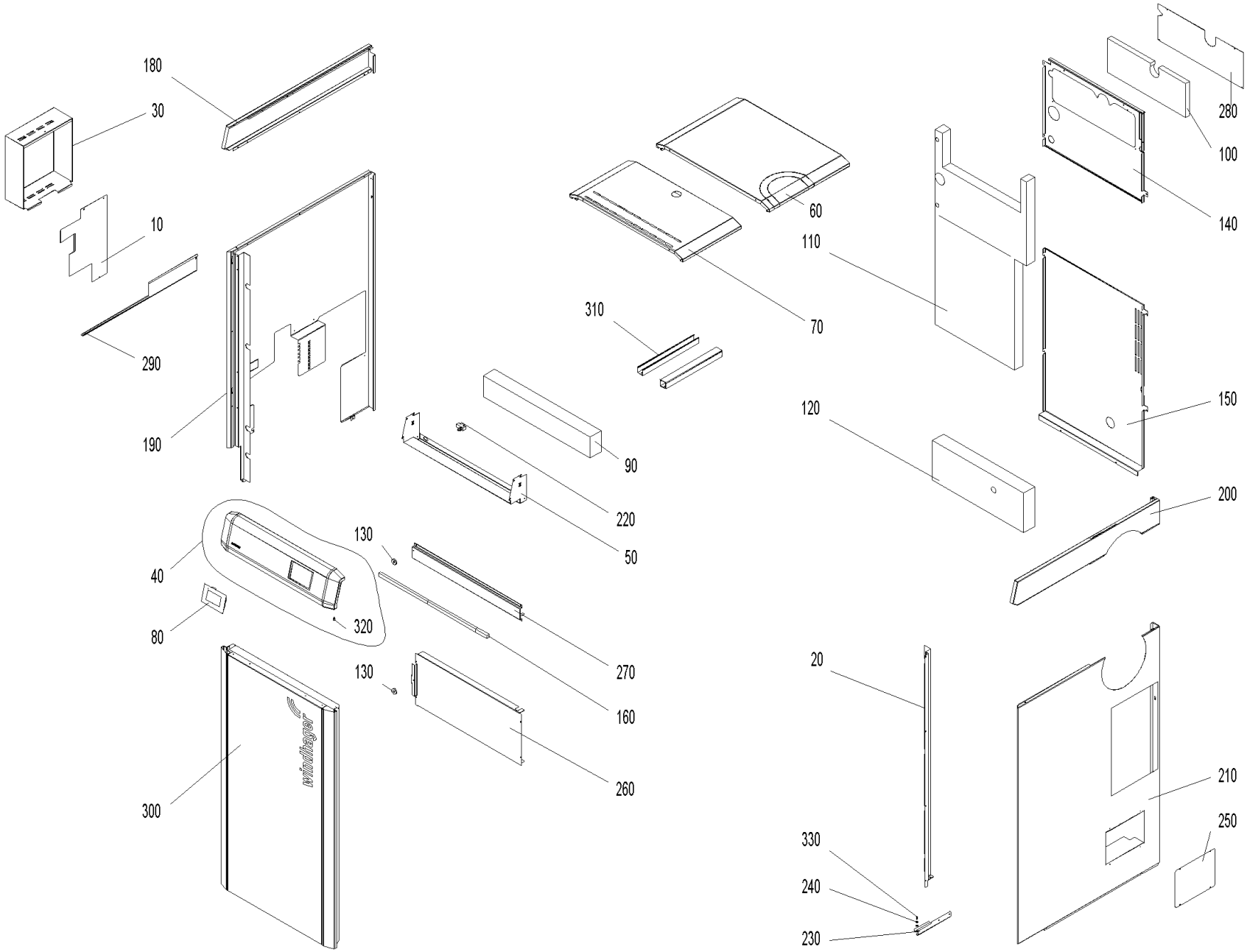

Verkleidung (A000228)

Pos.	Artikelnr.	Bezeichnung	Menge	Einheit
10	054622	Abdeckung Seitenwand links unten PW72-103	1.00	Stk
20	054602	Abdeckung Seitenwand rechts PW72-103	1.00	Stk
30	053812	Abdeckung Steckerkonsole PW24-103	1.00	Stk
40	055397	Bedienfeld PW72-103	1.00	Stk
50	054624	Befestigungsblech Verkleidung PW72-103	1.00	Stk
60	054619	Deckel hinten PW72-103	1.00	Stk
70	054620	Deckel vorne PW72-103	1.00	Stk
80	001009	INF8 MES INFINITY InfoWIN Touch BW2T, LWPT, PW24-103, BW2P, AEHM inkl. Masterfunktion und Webserver	1.00	Stk
90	011175	Isolierung Bedienfeld PW72-103	1.00	Stk
100	011174	Isolierung Heizflächenreinigung oben PW72-103	1.00	Stk
110	011173	Isolierung Rückwand oben PW72-103	1.00	Stk
120	011172	Isolierung Rückwand unten PW72-103	1.00	Stk
130	001761	Magnet Ø31 gummiummantelt	1.00	Stk
140	054610	Rückwand oben PW72-103	1.00	Stk
150	054609	Rückwand unten PW72-103	1.00	Stk
160	009623	Schallisolierung Verkleidung PW72-103	3.00	Stk
170	016489	Schnappmutter 0536/17 vz.	1.00	Stk
180	054617	Seitenwand links oben PW72-103	1.00	Stk
190	055398	Seitenwand links PW72-103	1.00	Stk
200	054618	Seitenwand rechts oben PW72-103	1.00	Stk
210	054616	Seitenwand rechts unten PW72-103	1.00	Stk
210	016489	Schnappmutter 0536/17 vz.	7.00	Stk

Verkleidung (A000228)

Pos.	Artikelnr.	Bezeichnung	Menge	Einheit
220	007128	Türschalter (Mikroschalter) LWP18-50, BWXL 35-60, LWK, LWPT, PW	1.00	Stk
230	054164	Türangel unten PW72-103	1.00	Stk
240	018309	U-Scheibe DIN 134 - M5	1.00	Stk
250	053814	Verkleidung Abdeckung Reinigungsdeckel PW24-103	1.00	Stk
260	054606	Verkleidung Abdeckung vorne mitte PW72-103	1.00	Stk
270	054608	Verkleidung Abdeckung vorne oben PW72-103	1.00	Stk
280	054611	Verkleidung Deckel Heizflächenreinigung oben PW72-103	1.00	Stk
290	054625	Verkleidung Schiene links PW72-103	1.00	Stk
300	055396	Verkleidung Tür kpl. PW72-103	1.00	Stk
310	050978	Wand und Deckenkanal BW2, PW24-103	1.00	M
320	015507	Zapfenschraube M5x18	1.00	Stk
330	033092	Zapfenschrauben DIN927 - M5X5	1.00	Stk

Entaschung (A000229)

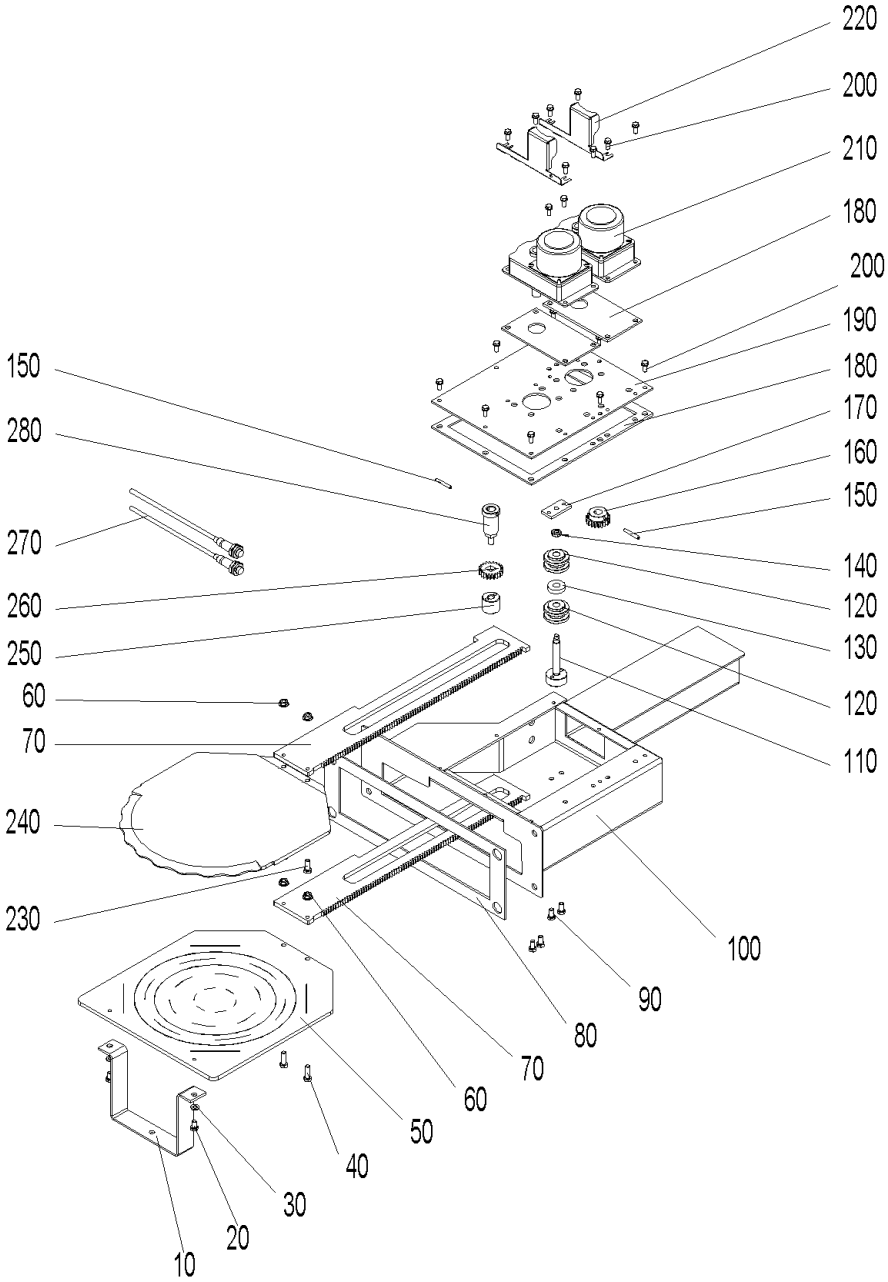

Entaschung (A000229)

Pos.	Artikelnr.	Bezeichnung	Menge	Einheit
10	053553	Ascheverdrängblech PW72-103	1.00	Stk
20	015026	Sechskantschraube DIN 933 - M6x10 - 8.8 - verzinkt	2.00	Stk
30	031713	Scheibe ISO 7089 - 6 - A2	2.00	Stk
40	015471	Sechskantschraube DIN 933 - M6x20 - 8.8 - verzinkt	2.00	Stk
50	052163	Ascheschieber PW40-103	1.00	Stk
60	016566	Sperrzahnmutter M6 verzinkt	4.00	Stk
70	053667	Zahnstange oben PW72-103	2.00	Stk
80	052152	Dichtung Fl. Entaschung PW24-103	1.00	Stk
90	017051	Sechskantschraube DIN 933 - M6x12 - 8.8	4.00	Stk
100	053531	Konsole Entaschung PW72-103	1.00	Stk
110	052153	Welle Lagerung PW24-103	1.00	Stk
120	007125	Lagerung Rüttelantrieb	4.00	Stk
130	052149	Distanzscheibe PW24-103	1.00	Stk
140	016659	Mutter DIN439 - M 8	1.00	Stk
150	018665	Spiral Spannstift DIN 7344 - 4x30	2.00	Stk
160	052154	Stirnrad PW24-103	1.00	Stk
170	052150	Lagerungsblech PW24-103	1.00	Stk
180	053551	Dichtung Deckel Entaschung PW72-103	1.00	Stk
190	053549	Deckel oben Entaschung PW72-103	1.00	Stk
200	031545	Gewindefurchende Sechskantschraube DIN 7500 - M5x12, verzinkt	18.00	Stk
210	053641	Motor - Entaschung PW24-103	2.00	Stk
220	054167	Kabelabdeckung Motor Entaschung PW24-103	2.00	Stk

Entaschung (A000229)

Pos.	Artikelnr.	Bezeichnung	Menge	Einheit
230	024768	Sechskantschraube DIN 933 - M6x16 - A4 - besch. mit Gleitlack bc2571 (bis 600°C)	2.00	Stk
240	055453	Glutbettschieber PW72-103	1.00	Stk
250	054944	Lagerung Welle PW72-103	1.00	Stk
260	054946	Stirnrad M1,5 Z21 PW72-103	1.00	Stk
270	007657	Näherungsschalter M12 induktiv PW24-103	2.00	Stk
280	054943	Antriebswelle PW72-103	1.00	Stk

Brennkammer (A000230)

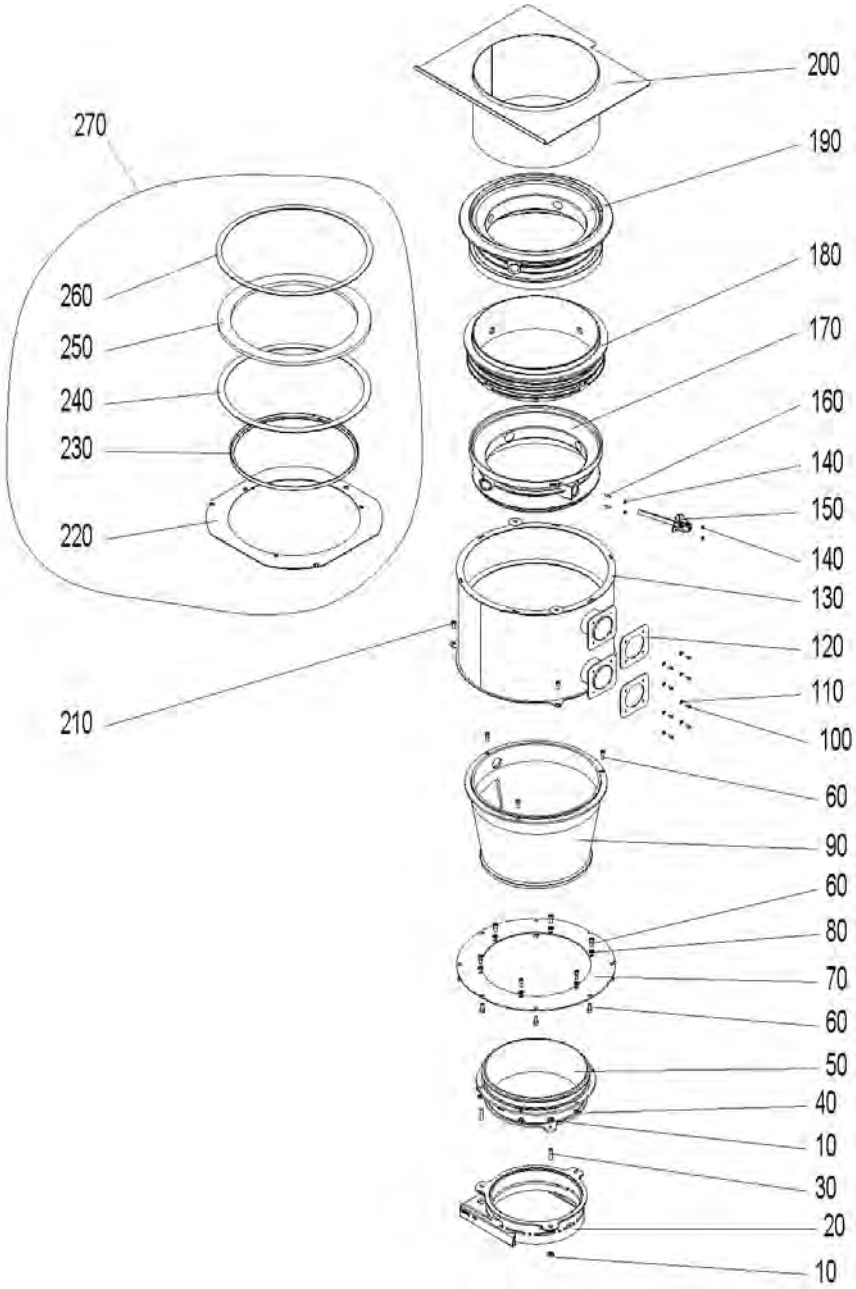

Brennkammer (A000230)

Pos.	Artikelnr.	Bezeichnung	Menge	Einheit
10	031155	Mutter DIN 934 - M10 - A4	6.00	Stk
20	052866	Konus D270 PW40-103	1.00	Stk
30	052061	Gewindestift M10x40 A2	3.00	Stk
40	031154	Mutter DIN934 - M8 - A4	6.00	Stk
50	054939	Vergaserrohr unten PW72-103	1.00	Stk
60	053834	Zylinderschraube m. Innensechskant M8 x 20 - A4	17.00	Stk
70	054942	Befestigungsblech Vergaserrohr PW72-103	1.00	Stk
80	024779	U-Scheibe ISO 7089 - 8 - A2	6.00	Stk
90	054938	Vergaserrohr PW72-103	1.00	Stk
100	017020	Sechskantschraube DIN 933 - M5x12 - A2	8.00	Stk
110	018309	U-Scheibe DIN 134 - M5	8.00	Stk
120	052088	Brennerdichtung rechts PW24-103	2.00	Stk
130	053506	Brenner kpl. PW72-103	1.00	Stk
140	017035	Mutter DIN 934 - M5 - A2	4.00	Stk
150	054951	Sekundärluftzündung kpl. PW72-103	1.00	Stk
160	054158	Gewindestifte mit ISK und Kegelkuppe ISO4026/DIN 913 M 5X 20 Edelstahl A2	2.00	Stk
170	053514	Sekundärluftdüse unten PW72-103	1.00	Stk
180	053515	Sekundärluftdüse oben PW72-103	1.00	Stk
190	053516	Tertiärluftdüse PW72-103	1.00	Stk
200	053517	Vergaserrohr oben PW72-103	1.00	Stk
210	016773	Zylinderschraube m. Innensechskant ISO 4762 - M 8 x 16 - 8.8 (DIN 912)	3.00	Stk
220	053498	Dichtung Brennerflansch PW72-103	1.00	Stk

Brennkammer (A000230)

Pos.	Artikelnr.	Bezeichnung	Menge	Einheit
230	054953	Sekundärluftdichtung mitte PW72-103	1.00	Stk
240	053524	Dichtung Sekundärluft PW72-103	1.00	Stk
250	053521	Dichtung Sekundärluft /Tertiärluft PW72-103	1.00	Stk
260	053523	Tertiärluftdichtung PW72-103	1.00	Stk
270	055810	Dichtungsset PW72-103	1.00	Stk

Ascheaustragung (A000154)

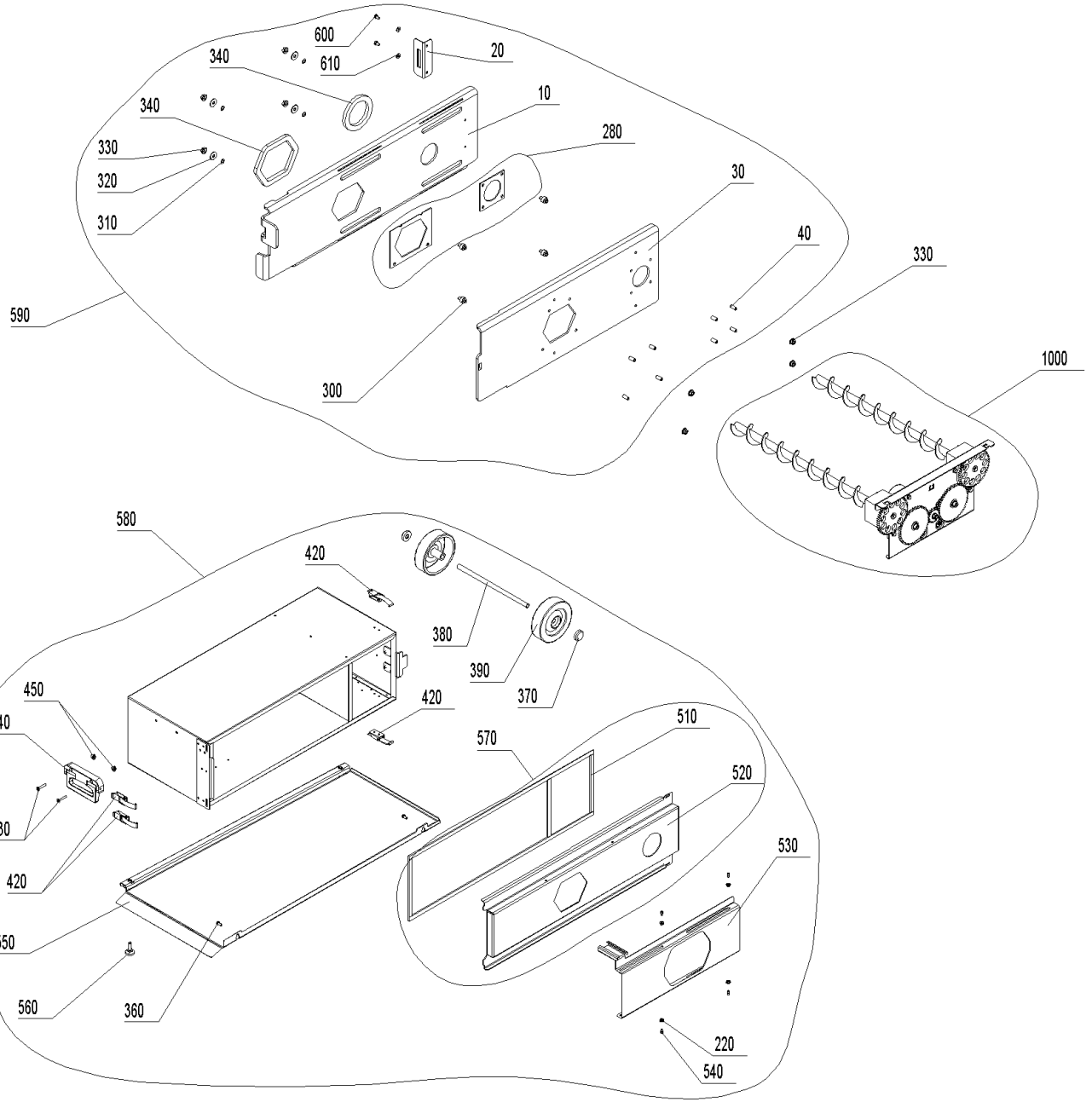

Ascheaustragung (A000154)

Pos.	Artikelnr.	Bezeichnung	Menge	Einheit
10	055157	Schieber Ascheboxflansch PW24-103	1.00	Stk
20	055158	Arretierung Aschebox PW24-103	1.00	Stk
30	055156	Flansch Aschebox PW24-103	1.00	Stk
40	033536	Gewindestift M8 x 20 VZ, DIN 913	8.00	Stk
220	016565	Sperrzahnmutter M5 verzinkt	4.00	Stk
280	055089	Dichtung Ascheboxflansch vorne und hinten PW24-103	1.00	Stk
300	055159	Bolzen Ascheschieber PW24-103	4.00	Stk
310	055132	Passscheibe D14	16.00	Stk
320	031756	U-Scheibe ISO 7093	4.00	Stk
330	016553	Sperrzahnmutter M8 verzinkt	4.00	Stk
340	055241	Silikon Vierkantprofil 15x10 mm,	0.78	M
360	031545	Gewindefurchende Sechskantschraube DIN 7500 - M5x12, verzinkt	2.00	Stk
370	006889	Sicherungsscheibe Ø12 mit Kunststoffkappe	2.00	Stk
380	051379	Achse Aschebox BW2, BW2T, BW2P	1.00	Stk
390	006888	Rad AG 125-12 Vollgummi Aschebehälter	2.00	Stk
420	009546	Spannverschluss	4.00	Stk
430	054573	Senkschraube M6x30 DIN965	2.00	Stk
440	054570	Griff PW24-103	1.00	Stk
450	016566	Sperrzahnmutter M6 verzinkt	2.00	Stk
510	054571	Dichtung Aschelade PW24-103	1.00	Stk
520	056206	Aschebox De. kpl. RAL 7012 FS PW	1.00	Stk
530	054494	Aschebox Verschluß PW24-103	1.00	Stk

Ascheaustragung (A000154)

Pos.	Artikelnr.	Bezeichnung	Menge	Einheit
540	033092	Zapfenschrauben DIN927 - M5X5	4.00	Stk
550	056207	Aschebox Sockel RAL 7012 FS PW	1.00	Stk
560	055141	Stellfuß PW24-103	2.00	Stk
570	054576	Aschebox Deckel kpl. PW24-103	1.00	Stk
580	052700	PWZ050 Aschebox zu Hackgut-Vergaser Abmessungen ohne Griff u. ohne Räder: BxHxT ca. 342x225x744mm Nutzvolumen: 50L Abmessungen in	1.00	Stk
590	055218	Ascheschieber kpl. PW24-103	1.00	Stk
600	015026	Sechskantschraube DIN 933 - M6x10 - 8.8 - verzinkt	2.00	Stk
610	020540	U-Scheibe DIN 134 - M6	2.00	Stk
1000	A000257	Schnecken m. Antrieb	1.00	Stk

Schnecken m. Antrieb (A000257)

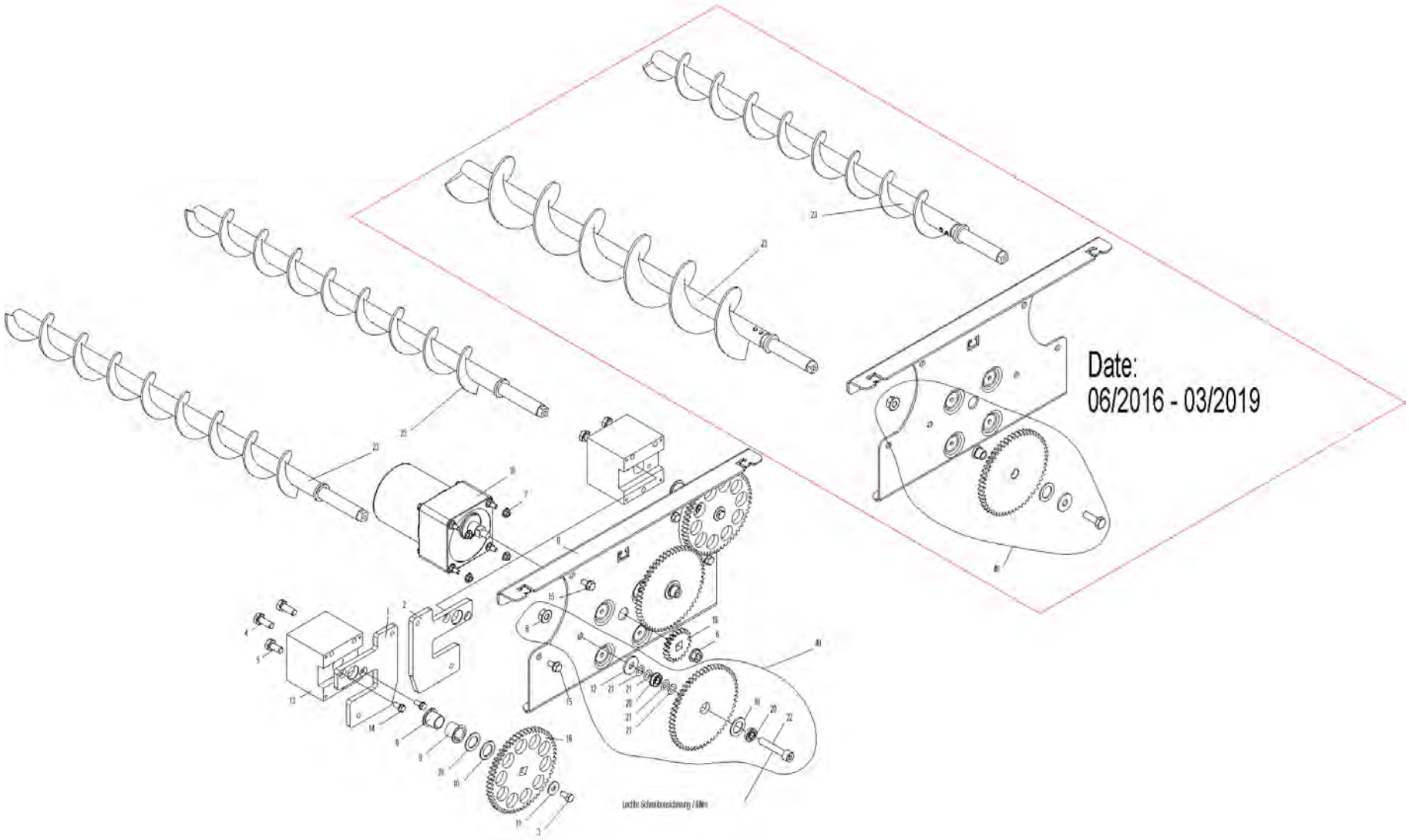

Schnecken m. Antrieb (A000257)

Pos.	Artikelnr.	Bezeichnung	Menge	Einheit
1	051169	Flanschplatte links AAT PW24-103	1.00	Stk
2	052371	Flanschplatte rechts AAT PW24-103	1.00	Stk
3	017051	Sechskantschraube DIN 933 - M6x12 - 8.8	2.00	Stk
4	017086	Sechskantschraube DIN 933 - M8x20 - 8.8 - verzinkt	4.00	Stk
5	016721	Sechskantschraube DIN 933 - M8x16 - 8.8, schwarz	1.00	Stk
6	016553	Sperrzahnmutter M8 verzinkt	3.00	Stk
7	016565	Sperrzahnmutter M5 verzinkt	4.00	Stk
8	052197	Konsole AAT PW24-103	1.00	Stk
9	012508	Gleitlager-Bundbuchse	4.00	Stk
10	047545	Scheibe D25/16,2x1,5 verz.	6.00	Stk
11	031753	U-Scheibe DIN125 - M6 - A2	2.00	Stk
12	031755	U-Scheibe DIN 9021 - M8	2.00	Stk
13	047920	Flansch für Ascheaustragung BW35-60, PW24-103	2.00	Stk
14	031545	Gewindefurchende Sechskantschraube DIN 7500 - M5x12, verzinkt	4.00	Stk
15	031549	Sechskantschraube DIN 7500 - M6x12	4.00	Stk
16	052196	Stirnrad Schnecke PW24-103	2.00	Stk
18	050901	Schneckenmotor SPG 4,8 U/min	1.00	Stk
19	053412	Stirnrad Motor geh. M2 Z20	1.00	Stk
20	055728	Rillenkugellager - mit Bund F688 ZZ-8x16x5	4.00	Stk
21	055132	Passscheibe D14	8.00	Stk
22	018172	Zylinderschraube m. Innensechskant ISO 4762 - M 8 x 45 - 8.8 - verzinkt (DIN 912)	2.00	Stk
23	055916	Austragungsschnecke 2 PW72-103	2.00	Stk

Schnecken m. Antrieb (A000257)

Pos.	Artikelnr.	Bezeichnung	Menge	Einheit
23	055918	Austragungsschnecke 1 PW24-60	2.00	Stk
40	055945	Zwischenrad 1/2 kpl. AA PuroWIN	2.00	Stk

Ascheaustragung in Tonne (A000250)

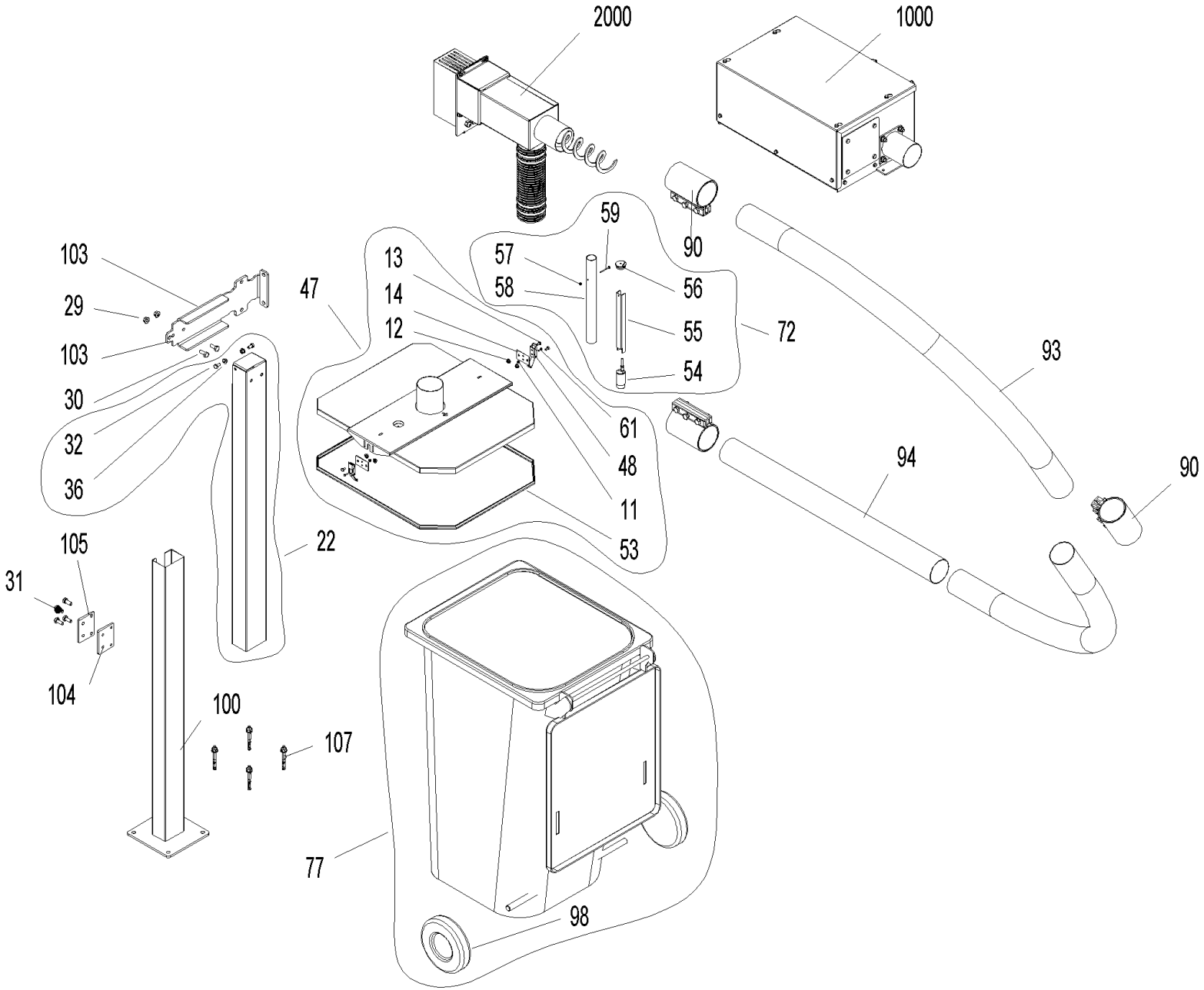

Ascheaustragung in Tonne (A000250)

Pos.	Artikelnr.	Bezeichnung	Menge	Einheit
11	016564	Sperrzahnmutter M4 verzinkt	2.00	Stk
12	016566	Sperrzahnmutter M6 verzinkt	4.00	Stk
13	015026	Sechskantschraube DIN 933 - M6x10 - 8.8 - verzinkt	4.00	Stk
14	055944	Einstellplatte De.	2.00	Stk
22	055942	Stütze oben Förderrohr	1.00	Stk
29	016567	Sperrzahnmutter M10 verzinkt	2.00	Stk
31	054526	Sechskantschraube DIN 933 - M10x25 - 8.8 - verzinkt	6.00	Stk
32	015134	Sechskantschraube DIN 933 - M8x16 - 8.8 - verzinkt	2.00	Stk
36	016553	Sperrzahnmutter M8 verzinkt	2.00	Stk
47	055510	PWZ Abdeckung Tonne zu Ascheaustragung	1.00	Stk
48	009546	Spannverschluss	2.00	Stk
53	053467	Dichtungsprofil Vorratsbehälter 200KG und Ascheaustragung in Tonne BW2, BW2T 10-33, BWL10-26, PW	1.00	Stk
54	006821	Näherungsschalter mit Anschlußkabel 2m	1.00	Stk
55	055035	Fixierung Näherungsschalter	1.00	Stk
56	051316	Stopfen GPN 300 F 242 gebohrt Ø5	1.00	Stk
57	016724	Sicherungsmutter DIN 985 - M 4 - 8 - verzinkt	1.00	Stk
58	046190	Einbringrohr Näherungsschalter PW Zuführung	1.00	Stk
59	016752	Sechskantschraube DIN 933 - M4x40 - 8.8 - verzinkt	1.00	Stk
61	055014	Sechskantschraube DIN 933 - M4x12 - 8.8 - verzinkt	2.00	Stk
72	056097	PWZ032 Überwachung Füllstand Aschetonne	1.00	Stk
77	055515	PWZ031 Aschetonne 240 Liter Stahl verzinkt (verstärkte Radausführung)	1.00	Stk
90	055513	PWZ Rohrkupplung DVK HD mit Erdungsband Nenn-Ø88,9, Baulänge 150 (EPDM-Dichtung,	3.00	Stk

Ascheaustragung in Tonne (A000250)

Pos.	Artikelnr.	Bezeichnung	Menge	Einheit
		Anzugsmoment max: 80Nm)		
93	055495	PWZ Rohrbogen 88,9 x R800 NIRO	2.00	Stk
94	055496	PWZ Rohr 90 x 1000mm	1.00	Stk
98	055943	Rad Aschetonne 240L	2.00	Stk
100	055750	Stütze unten Förderrohr	1.00	Stk
103	055743	Befestigung oben Förderrohr PW	1.00	Stk
104	055911	Klemmplatte hinten PW	1.00	Stk
105	055749	Klemmplatte Stützfuß PW	1.00	Stk
107	001594	Ankerbolzen FAZ II 10/ 10/ 95	4.00	Stk
1000	A000251	Aschesammelbehälter	1.00	Stk
2000	A000252	Übergabe in Tonne	1.00	Stk

Aschesammelbehälter (A000251)

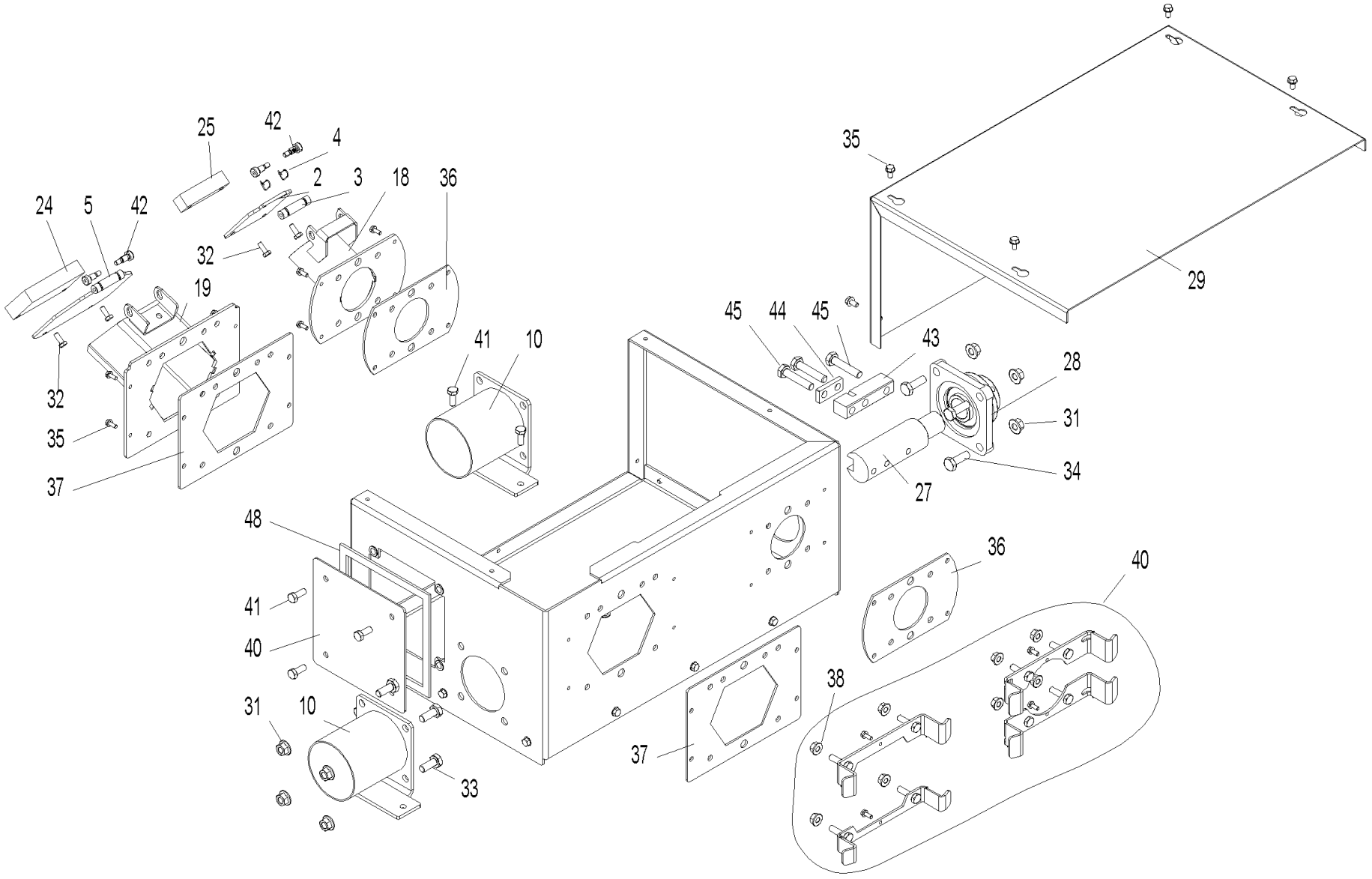

Aschesammelbehälter (A000251)

Pos.	Artikelnr.	Bezeichnung	Menge	Einheit
2	055521	Dichtklappe hinten Aschesammelbehälter PW	1.00	Stk
3	055524	Achse Klappe vorne Aschesammelbehälter PW	1.00	Stk
4	055737	Federbügelklammer Aschesammelbehälter PW	2.00	Stk
5	055676	Dichtklappe vorne Aschesammelbehälter PW	1.00	Stk
10	055680	Rohr Ausgang Aschesammelbehälter PW	1.00	Stk
18	055720	Auslassrohr hinten Aschesammelbehälter PW	1.00	Stk
19	055721	Auslassrohr vorne Aschesammelbehälter PW	1.00	Stk
24	055517	Gewicht Klappe vorne Aschesammelbehälter PW	1.00	Stk
25	055520	Gewicht Klappe hinten Aschesammelbehälter PW	1.00	Stk
27	055690	Welle hinten Schnecke Aschesammelbehälter PW	1.00	Stk
28	052859	Flanschlager mit Berührungsschutz Ø30 Bauhöhe 40,2; 4-Loch; UCF 206 FYH (staubdicht)	1.00	Stk
29	055692	Deckel Übergabe in Tonne Aschesammelbehälter PW	1.00	Stk
31	016567	Sperrzahnmutter M10 verzinkt	2.00	Stk
32	024759	Sechskantschraube DIN 933 - M6x16 - 8.8 - verzinkt	1.00	Stk
33	054526	Sechskantschraube DIN 933 - M10x25 - 8.8 - verzinkt	1.00	Stk
34	054269	Sechskantschraube DIN 933 - M10x30 - 8.8 - verzinkt	1.00	Stk
35	031549	Sechskantschraube DIN 7500 - M6x12	1.00	Stk
36	055710	Dichtung Ascheflansch hinten Aschesammelbehälter PW	1.00	Stk
37	055711	Dichtung Ascheflansch vorne Aschesammelbehälter PW	2.00	Stk
38	016553	Sperrzahnmutter M8 verzinkt	8.00	Stk
40	055704	Wartungsdeckel Asche Aschesammelbehälter PW	1.00	Stk
41	017086	Sechskantschraube DIN 933 - M8x20 - 8.8 - verzinkt	4.00	Stk

Aschesammelbehälter (A000251)

Pos.	Artikelnr.	Bezeichnung	Menge	Einheit
42	055736	Schulterpassschraube 12.9 - 6x12 / ISO 7379 (M6x12)	4.00	Stk
43	055712	Fixierung Schnecke Aschesammelbehälter PW	1.00	Stk
44	055718	Fixierung Schnecke oben Aschesammelbehälter PW	1.00	Stk
45	033099	Sechskantschraube DIN 933 - M10x50 - 8.8	6.00	Stk
48	054532	Dichtung Wartungsdeckel Vorratsbehälter/Aschesammelbehälter	1.00	Stk

Übergabe in Tonne (A000252)

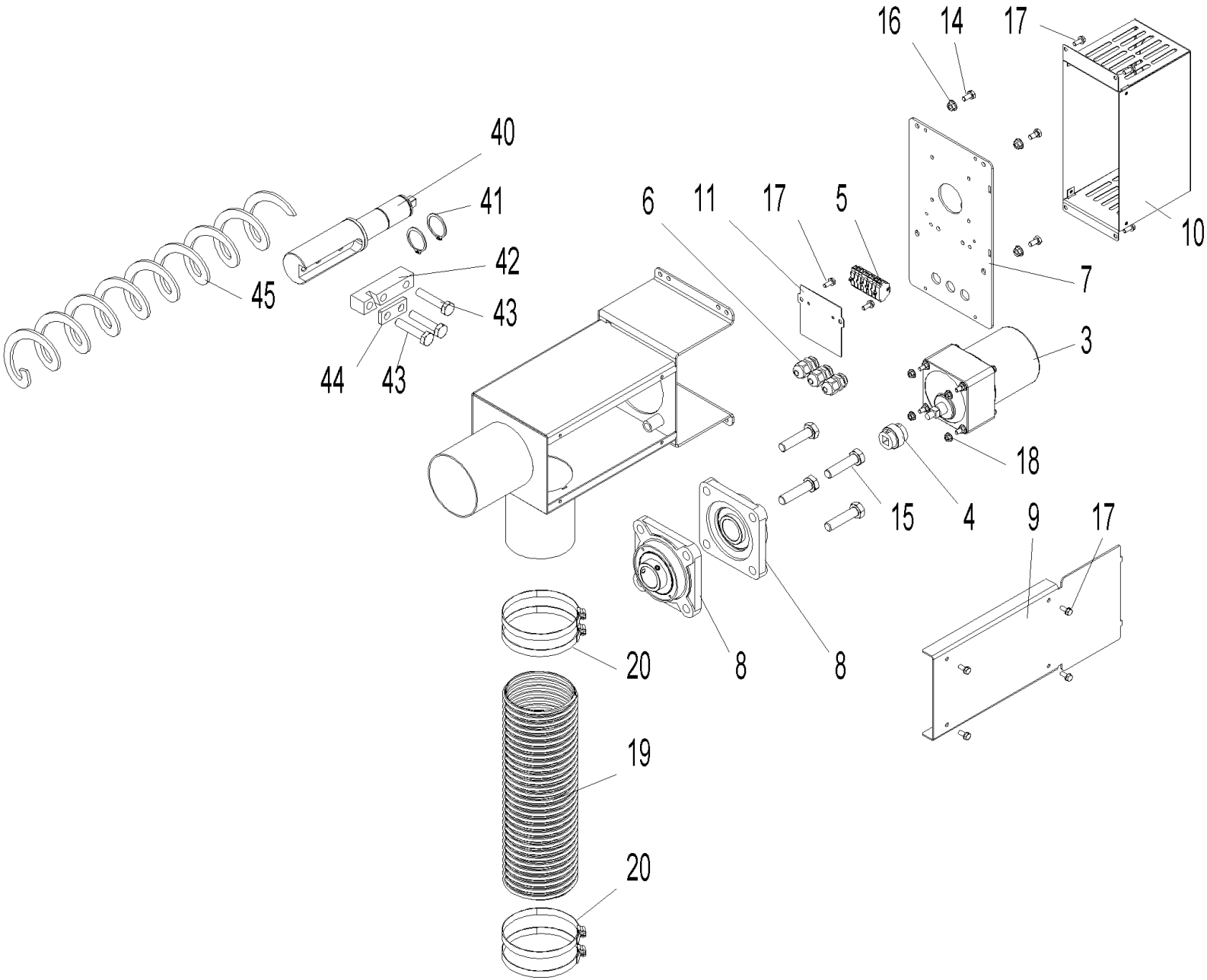

Übergabe in Tonne (A000252)

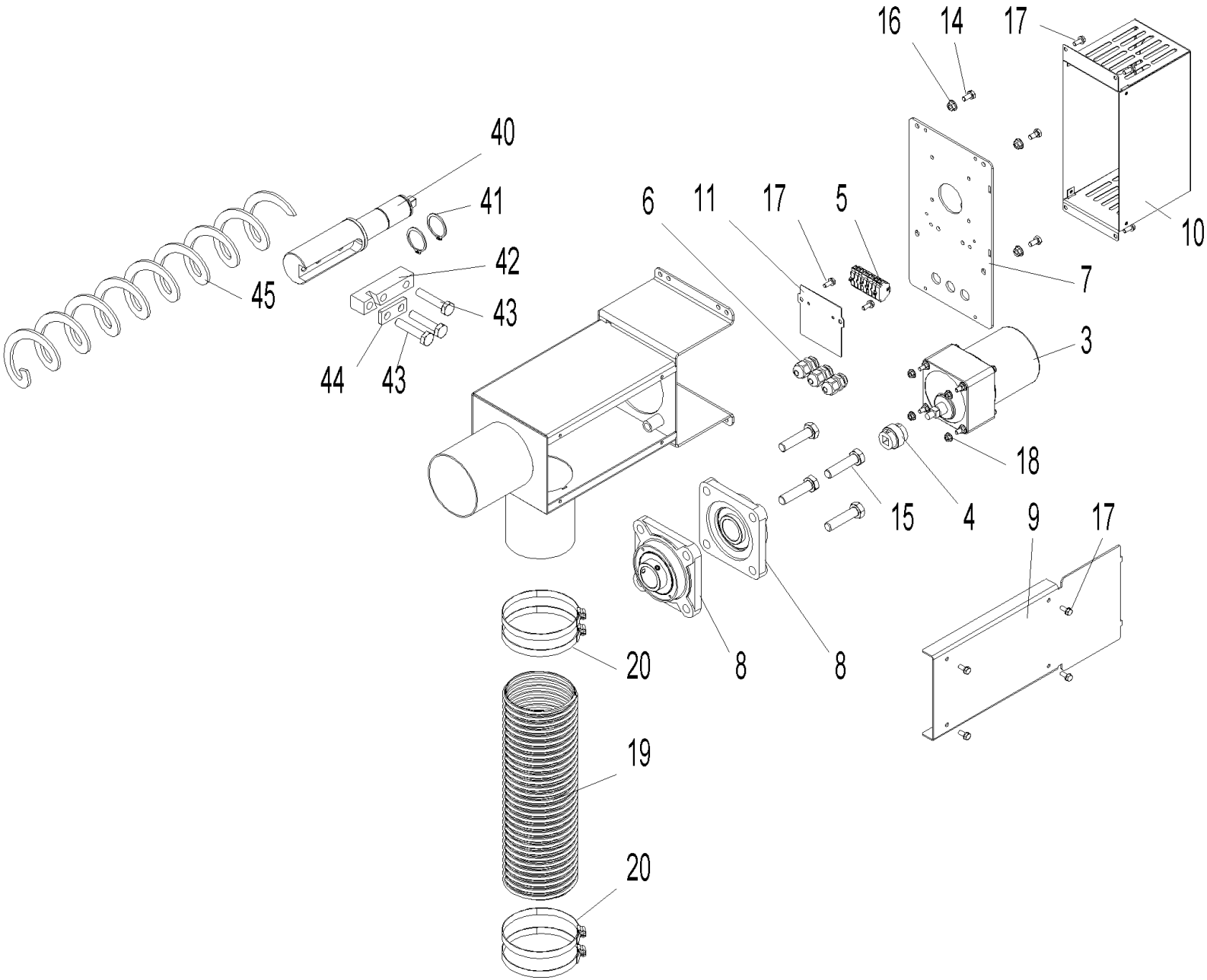

Übergabe in Tonne (A000252)

Pos.	Artikelnr.	Bezeichnung	Menge	Einheit
3	050901	Schneckenmotor SPG 4,8 U/min	1.00	Stk
4	055908	Kupplung 03 Übergabe Tonne PW	1.00	Stk
5	006921	Wagoblock 261 9-polig	1.00	Stk
6	006340	Kabelverschraubung	3.00	Stk
7	055507	Drehmomentenstütze Übergabe Tonne	1.00	Stk
8	052859	Flanschlager mit Berührungsschutz Ø30 Bauhöhe 40,2; 4-Loch; UCF 206 FYH (staubdicht)	2.00	Stk
9	055714	Deckel Übergabe Asche Tonne	1.00	Stk
10	055719	Berührungsschutz Motor Übergabe Tonne PW	1.00	Stk
11	055727	Halteplatte Wago Übergabe Tonne	1.00	Stk
14	017051	Sechskantschraube DIN 933 - M6x12 - 8.8	4.00	Stk
15	033099	Sechskantschraube DIN 933 - M10x50 - 8.8	4.00	Stk
16	016566	Sperrzahnmutter M6 verzinkt	4.00	Stk
17	031545	Gewindefurchende Sechskantschraube DIN 7500 - M5x12, verzinkt	10.00	Stk
18	016565	Sperrzahnmutter M5 verzinkt	4.00	Stk
19	055747	Hochtemperaturschlauch HTD Innen-Ø89mm (Bund mit 4 lfm.)	1.00	M
20	055748	Schlauchklemme (90 bis 100mm)	4.00	Stk
40	055502	Welle Schnecke Übergabe Tonne PW	1.00	Stk
41	055694	Sicherungsring DIN 471 - 30 x 1,5	1.00	Stk
42	055712	Fixierung Schnecke Aschesammelbehälter PW	1.00	Stk
43	033099	Sechskantschraube DIN 933 - M10x50 - 8.8	3.00	Stk
44	055718	Fixierung Schnecke oben Aschesammelbehälter PW	1.00	Stk
45	055508	PWZ Flexible Ascheschnecke (Länge = 5600mm +200/-50)	1.00	Stk

Zündung (A000158)

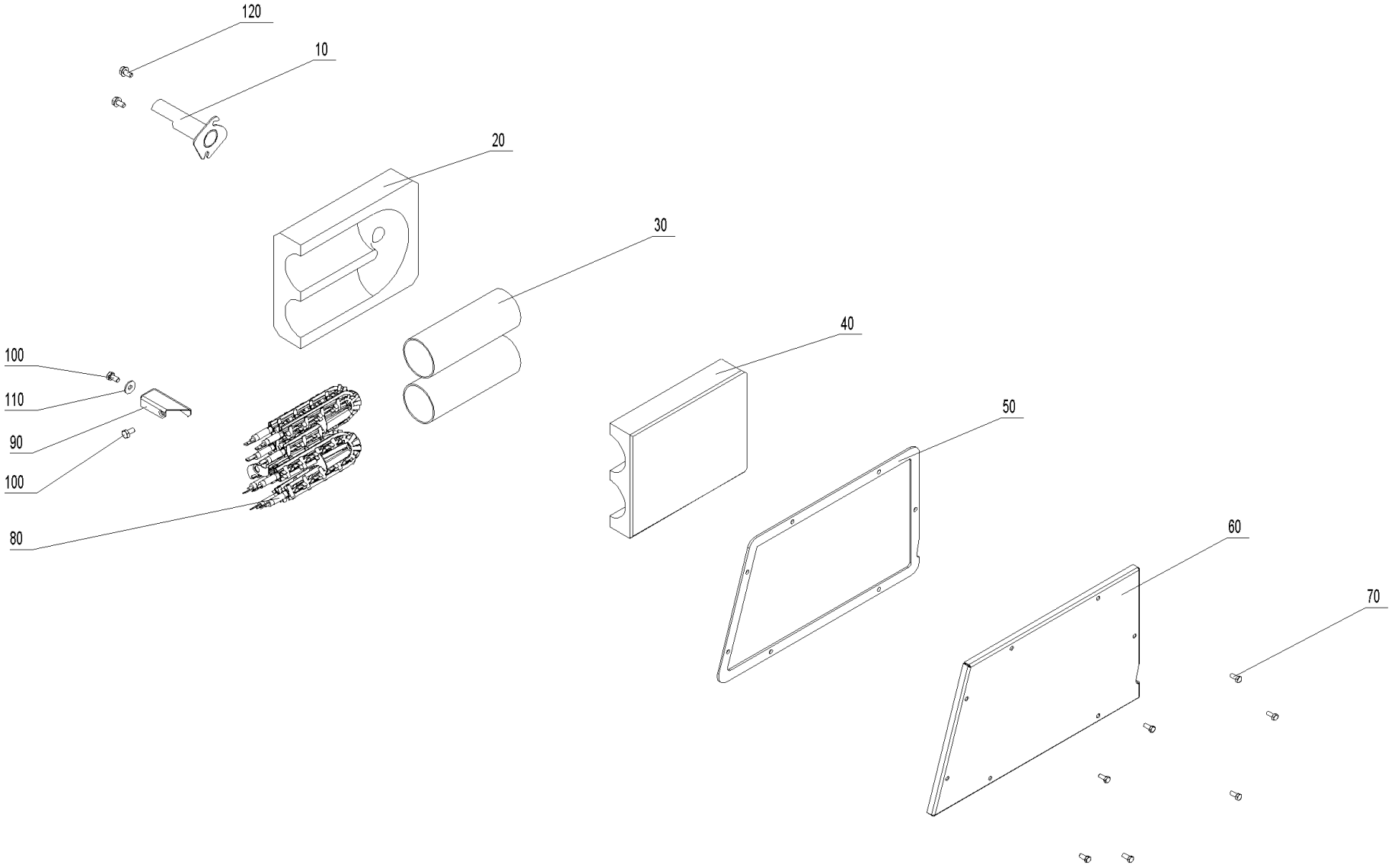

Zündung (A000158)

Pos.	Artikelnr.	Bezeichnung	Menge	Einheit
10	052716	Zündrohr PW24/30	1.00	Stk
10	053668	Zündrohr PW72-103	1.00	Stk
10	052766	Zündrohr PW40-60	1.00	Stk
20	052713	Isolierstein unten Zündung PW24-103	1.00	Stk
30	050489	Zündrohr Zündung LWP, PW24-103	2.00	Stk
40	007484	Isolierstein oben Zündung PW24-103	1.00	Stk
50	052993	Dichtung Zündung PW24-103	1.00	Stk
60	052717	Abdeckung Zündung PW24-103	1.00	Stk
70	017020	Sechskantschraube DIN 933 - M5x12 - A2	7.00	Stk
80	055201	Zündelement BW, FW ab Los15, VAE ab Los6, BWXL, LWK, BW2, BW2T, PW, BWL, BW2P	1.00	Stk
90	052387	Anschlag Zündung PW24-103	1.00	Stk
100	017051	Sechskantschraube DIN 933 - M6x12 - 8.8	2.00	Stk
110	031753	U-Scheibe DIN125 - M6 - A2	1.00	Stk
120	031549	Sechskantschraube DIN 7500 - M6x12	2.00	Stk

Luftregelung PL (A000159)

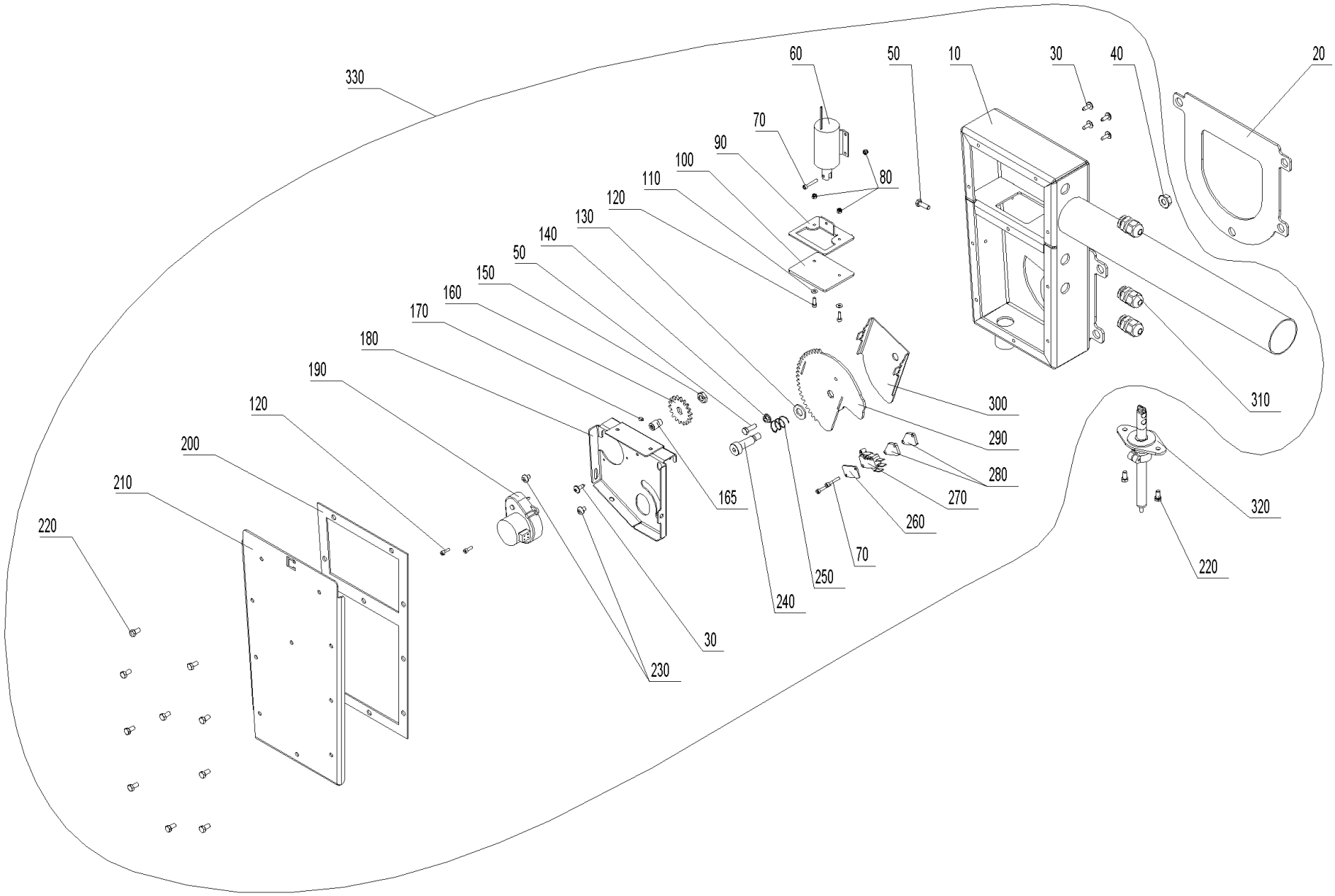

Luftregelung PL (A000159)

Pos.	Artikelnr.	Bezeichnung	Menge	Einheit
10	055783	Luftschacht P kpl. geschw. RAL 7021 schw. be.	1.00	Stk
20	052890	Dichtung Flansch Luftschacht PW24-103	1.00	Stk
30	018139	Zyl.-Schraube 4,2x13 m. U-Scheibe	5.00	Stk
40	016553	Sperrzahnmutter M8 verzinkt	1.00	Stk
50	015025	Sechskantschraube DIN 933 - M5x16 - 8.8 - verzinkt	2.00	Stk
60	052911	Zylindermagnet PW24-60	1.00	Stk
70	016769	Zyl.-Schraube M3x20 verzinkt mit KS. DIN 7985 A Form H	3.00	Stk
80	016725	Sicherungsmutter DIN 985 - M 3 - 8 - verzinkt	3.00	Stk
90	052885	Absperrplatte PW24-103	1.00	Stk
100	052886	Dichtung Absperrplatte PW24-103	1.00	Stk
110	021474	U-Scheibe DIN 134 - M3 - verzinkt	2.00	Stk
120	052828	Zylinderschraube m. Innensechskant ISO 4762 - M 3 x 10 - 8.8 - verzinkt (DIN 912)	4.00	Stk
130	018058	U-Scheibe DIN 125 - M10	1.00	Stk
140	016565	Sperrzahnmutter M5 verzinkt	1.00	Stk
150	016659	Mutter DIN439 - M 8	1.00	Stk
160	055776	Stirnrad M2 Z18 TK36	1.00	Stk
165	056043	Stirnradbef. verz. schwarz chr.	1.00	Stk
170	054158	Gewindestifte mit ISK und Kegelkuppe ISO4026/DIN 913 M 5X 20 Edelstahl A2	1.00	Stk
180	055789	Konsole Stellmotor PL	1.00	Stk
190	095690	Luftklappen-Motor 1 U/min Crozet PuroWIN	1.00	Stk
200	055791	Di. De. Primärluftregelung	1.00	Stk
210	055792	De. Primärluftr. RAL7021 schw. be.	1.00	Stk

Luftregelung PL (A000159)

Pos.	Artikelnr.	Bezeichnung	Menge	Einheit
220	016756	SKT-Flanschschraube KL100 M5x10 vz. mit Sperr-Rippen unter dem Flansch, Gewinde bis Kopf, Oberflächengehärtet	12.00	Stk
230	016768	Linsenschraube mit Innensechskant, M3x5 verz.,	2.00	Stk
240	055777	Pass - Schulterschraube D10x25 ISO7379	1.00	Stk
250	053997	Druckfeder PW24-60	1.00	Stk
260	051044	Platte Mikroschalter PW24-60	1.00	Stk
270	009277	Mikroschalter mit Rollenhebel VAE, BW, BW2, LWP, LWK, LWPT, PW24-103	1.00	Stk
280	056070	Platte Mikroschalter 3mm	2.00	Stk
290	055787	Stirnrad PL	1.00	Stk
300	055784	Luftklappe PL	1.00	Stk
310	006340	Kabelverschraubung	3.00	Stk
320	052878	Strömungsmessumformer PW24-103	1.00	Stk
330	056250	Primärluftkasten kpl. PW24-103	1.00	Stk

Schaltfeld (A000160)

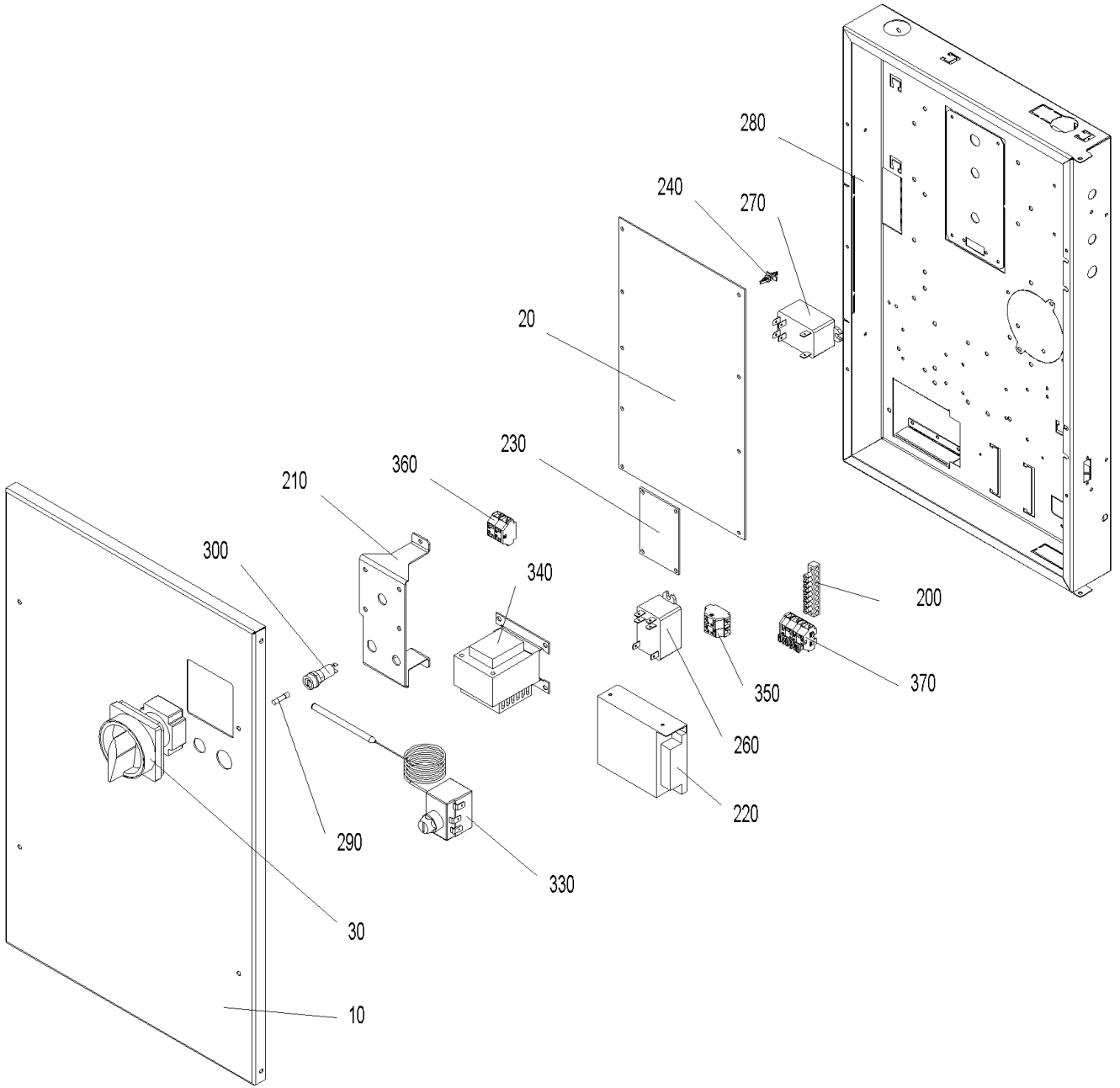

Schaltfeld (A000160)

Pos.	Artikelnr.	Bezeichnung	Menge	Einheit
10	053289	Deckel Schaltfeld PW24-103	1.00	Stk
20	012007	Feuerungsautomat PW24-103	1.00	Stk
30	012010	Hauptschalter 2polig 16 A PW24-103	1.00	Stk
40	013840	Kabel Nr.: 250 230V-Versorgung Fu`s + FA2 PW24-103	1.00	Stk
50	013841	Kabel Nr.: 251 Ascheaustragung PW24-103	1.00	Stk
60	013850	Kabel Nr.: 259 Position Ascheschieber + Schalter Überfüllung PW24-103	1.00	Stk
70	013851	Kabel Nr.: 260 Position Glutbettschieber + Level Controll PW24-103	1.00	Stk
80	013842	Kabel Nr.: 252 Heizflächenreinigung PW24-103	1.00	Stk
90	013843	Kabel Nr.: 253 LON Elektrikeranschluß PW24-103	1.00	Stk
100	013844	Kabel Nr.: 254 LON FA2 + STB PW24-103	1.00	Stk
110	013845	Kabel Nr.: 255 Motor Ascheschieber PW24-103	1.00	Stk
120	013847	Kabel Nr.: 256 Motor Glutbettschieber PW24-103	1.00	Stk
130	013848	Kabel Nr.: 257 ModBUS Steigschnecke PW24-103	1.00	Stk
140	013849	Kabel Nr.: 258 Netz + Heizungsnotschalter PW24-103	1.00	Stk
145	053326	Kabel Primärzündung PW24-103	1.00	Stk
150	013852	Kabel Nr.: 261 Saugzuggebläse PW24-103	1.00	Stk
160	013853	Kabel Nr.: 262 Sekundärluftklappe PW24-103	1.00	Stk
170	013855	Kabel Nr.: 263 Sekundärzündung PW24-103	1.00	Stk
180	013856	Kabel Nr.: 264 Türschalter kpl. PW24-103	1.00	Stk
190	013857	Kabel Nr.: 265 Versorgung ModBUS FU`s+FA2 PW24-103	1.00	Stk
200	009929	Klemmschiene MS 8x8mm 8pol.+Befestigungsbohrungen	1.00	Stk
210	053984	Konsole Hauptschalter PW24-60	1.00	Stk

Schaltfeld (A000160)

Pos.	Artikelnr.	Bezeichnung	Menge	Einheit
220	002054	Netzteil 12V, 4,2A Type LRS-50-12	1.00	Stk
230	012014	Platine - Relais PW24-103	1.00	Stk
240	007609	Platinenhalter CBS-4N spitz VAE, FW, BW10-26, BWXL, BW2, BW2T, LWPT, PW24-103, BWL	1.00	Stk
250	007620	Rauchgasfühler PT1000 (Länge 1100mm) BW2, BW2T, PW24-103, BWL, BW2P	1.00	Stk
260	005075	Relais 16A AC 2 polig 12V DC Steuerung	1.00	Stk
270	005025	Relais, Schließer 30A/250V AC , OMRON G7L-2A-BUB PMX, BW10-26, FW, VAE, BWXL, LWK, PW24-103	1.00	Stk
290	003228	Sicherung 6,3A	1.00	Stk
300	055193	ET-Set: Sicherungshalter f. Feinsicherung inkl. Umbauanleitung JW	1.00	Stk
310	502186	MES009M Tauchfühler ZTF 222 (Boiler-/Kessel-/Pufferfühler) für MES, Länge: 2,5m	1.00	Stk
320	007626	Thermoelement 2AB NM30/110 mm TI/DI 2AB25 2,5 (Brennkammer- bzw. Thermocontrollfühler)	1.00	Stk
330	005672	Sicherheitsthermostat VAE, LWK, BW2, BW2T, LWPT, PW24-103, BWL, BW2P Schaltpunkt:100 C +0/-6 Fühlerl.isol.; bei EW/JW ab 05/2017 (	1.00	Stk
340	007096	Trafo O2-Sonde 18VA LWP18-50, LWK, LWPT, PW24-103	1.00	Stk
350	006834	Wagoblock 261 4-polig "Sicherheit 1-4" (2xblau/2xgrau) VAE, FW, BW2, BW2T, LWPT, PW24-103, BWL	1.00	Stk
360	006833	Wagoblock 261 4-polig "12V GND" VAE, FW, BW2, BW2T, LWPT, PW24-103, BWL	1.00	Stk
370	007656	Wagoblock 261 XS 1-6 BW2, PW24-103	1.00	Stk
380	018140	Zylinder Schraube 4,2x13m unt.Scheibe DIN 7981 stumpf	1.00	Stk

Luftregelung SL/TL (A000231)

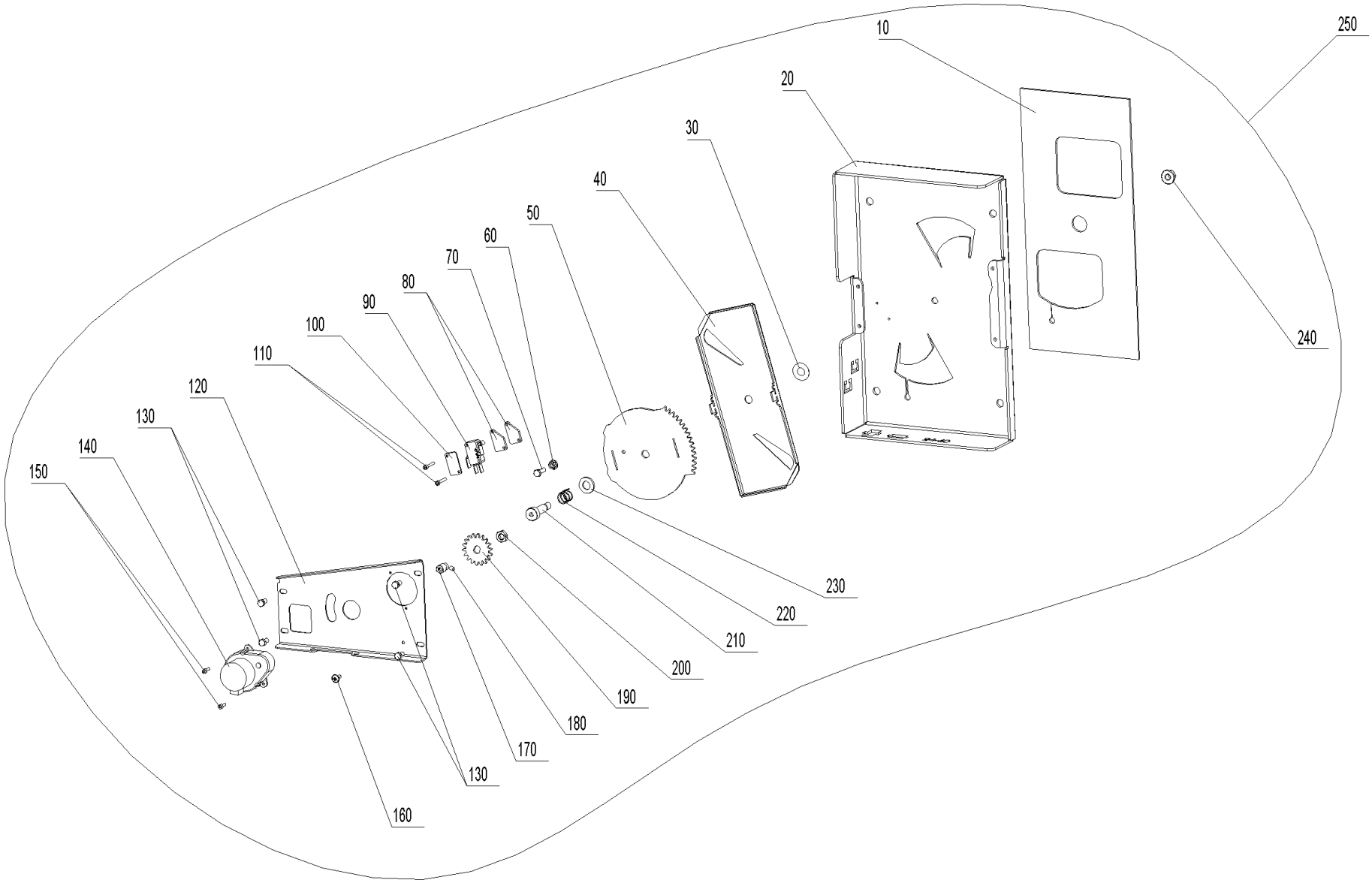

Luftregelung SL/TL (A000231)

Pos.	Artikelnr.	Bezeichnung	Menge	Einheit
10	055559	Dichtung Luftregelung S/T PW72-103	1.00	Stk
20	055772	Konsole Luftregelung S/T PW72-100	1.00	Stk
30	056042	Distanzscheibe 10x16x0,2 A2 DIN988	1.00	Stk
40	055773	Luftklappe S/T	1.00	Stk
50	055775	Stirnrad S/T	1.00	Stk
60	016565	Sperrzahnmutter M5 verzinkt	1.00	Stk
70	015025	Sechskantschraube DIN 933 - M5x16 - 8.8 - verzinkt	1.00	Stk
80	056070	Platte Mikroschalter 3mm	2.00	Stk
90	009277	Mikroschalter mit Rollenhebel VAE, BW, BW2, LWP, LWK, LWPT, PW24-103	1.00	Stk
100	051044	Platte Mikroschalter PW24-60	1.00	Stk
110	016769	Zyl.-Schraube M3x20 verzinkt mit KS. DIN 7985 A Form H	2.00	Stk
120	055779	Bef. Stellmotor S/T	1.00	Stk
130	016756	SKT-Flanschschraube KL100 M5x10 vz. mit Sperr-Rippen unter dem Flansch, Gewinde bis Kopf, Oberflächengehärtet	4.00	Stk
140	095690	Luftklappen-Motor 1 U/min Crozet PuroWIN	1.00	Stk
150	052828	Zylinderschraube m. Innensechskant ISO 4762 - M 3 x 10 - 8.8 - verzinkt (DIN 912)	2.00	Stk
160	018140	Zylinder Schraube 4,2x13m unt.Scheibe DIN 7981 stumpf	1.00	Stk
170	056043	Stirnradbef. verz. schwarz chr.	1.00	Stk
180	054158	Gewindestifte mit ISK und Kegelkuppe ISO4026/DIN 913 M 5X 20 Edelstahl A2	1.00	Stk
190	055776	Stirnrad M2 Z18 TK36	1.00	Stk
200	016659	Mutter DIN439 - M 8	1.00	Stk
210	055777	Pass - Schulterschraube D10x25 ISO7379	1.00	Stk
220	053997	Druckfeder PW24-60	1.00	Stk

Luftregelung SL/TL (A000231)

Pos.	Artikelnr.	Bezeichnung	Menge	Einheit
230	018058	U-Scheibe DIN 125 - M10	1.00	Stk
240	016553	Sperrzahnmutter M8 verzinkt	1.00	Stk
250	055780	Luftregelung - Sekundär PW72-103	1.00	Stk

Heizflächenreinigung (A000232)

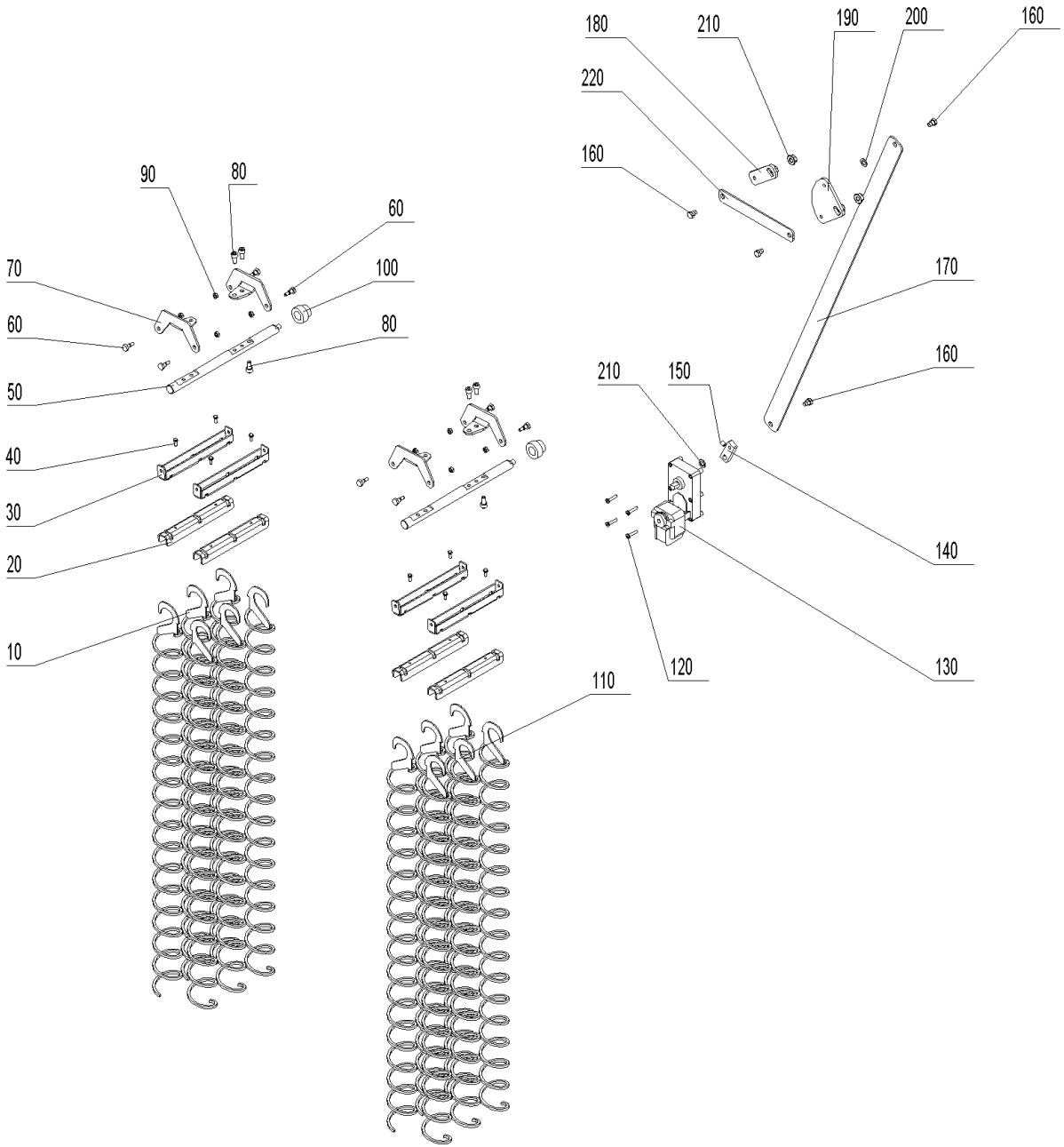

Heizflächenreinigung (A000232)

Pos.	Artikelnr.	Bezeichnung	Menge	Einheit
10	055556	Reinigungsschnecke links PW40-60 (Fallzug), PW72-103 (10x3 - Steig- u. Fallzug)	18.00	Stk
20	047065	Reinigungsprofil unten	6.00	Stk
30	047064	Reinigungsprofil oben	6.00	Stk
40	017020	Sechskantschraube DIN 933 - M5x12 - A2	12.00	Stk
50	053689	Welle für Heizflächenreinigung PW72-103	3.00	Stk
60	006756	Schraube Heizflächenreinigung M6	12.00	Stk
70	052738	Lagerarm für Heizflächenreinigung PW24-103	6.00	Stk
80	053102	Zylinderschraube m. Innensechskant ISO 4762 - M 8 x 16 - A4 (DIN 912)	15.00	Stk
90	016596	Mutter DIN 934 - M6 - A2	12.00	Stk
100	047416	Lager Heizflächenreinigung BWXL 35-60, PW24-103	3.00	Stk
120	016837	Zylinderschraube DIN 7985 M5x25 verz.m.KS	4.00	Stk
130	044665	Motor Ascheaustragung/ Heizflächenreinigung PMX15, BWE10-60, BW2, BW2T, PW, BWL, BW2P	1.00	Stk
140	053282	Rüttelhebel Motor HFR PW24-103	1.00	Stk
150	033112	Gewindestift DIN916 - M8x10-45H (mit Ringschneide)	1.00	Stk
160	012502	Ansatzschraube M8 x 6.5 verzinkt Ansatz D10 SW13	5.00	Stk
170	053284	Verbindung Heizflächenreinigung PW24-103	1.00	Stk
180	053281	Achsenhebel links HFR PW24-103	2.00	Stk
190	053280	Achsenhebel rechts HFR PW24-103	1.00	Stk
200	018031	Scheibe ISO 7092 - 10 - blank	1.00	Stk
210	016567	Sperrzahnmutter M10 verzinkt	3.00	Stk
220	053691	Verbinder Rüttelachse HFR PW72-103	1.00	Stk

PuroWIN 103 (A000226_4)

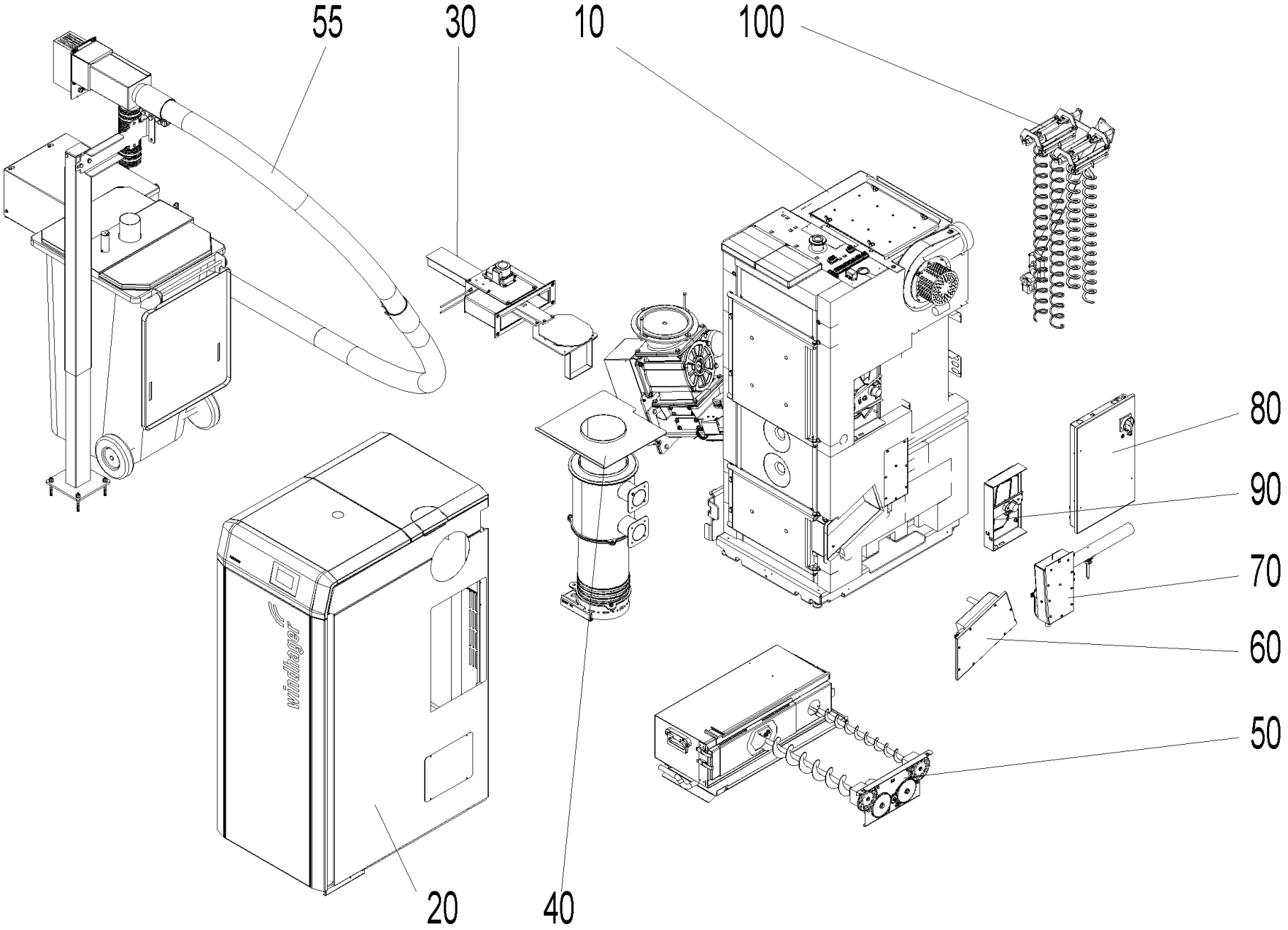

PuroWIN 103 (A000226_4)

Pos.	Artikelnr.	Bezeichnung	Menge	Einheit
10	A000227	Kessel	1.00	Stk
20	A000228	Verkleidung	1.00	Stk
30	A000229	Entaschung	1.00	Stk
40	A000230	Brennkammer	1.00	Stk
50	A000154	Ascheaustragung	1.00	Stk
55	A000250	Ascheaustragung in Tonne	1.00	Stk
60	A000158	Zündung	1.00	Stk
70	A000159	Luftregelung PL	1.00	Stk
80	A000160	Schaltfeld	1.00	Stk
90	A000231	Luftregelung SL/TL	1.00	Stk
100	A000232	Heizflächenreinigung	1.00	Stk

Kessel (A000227)

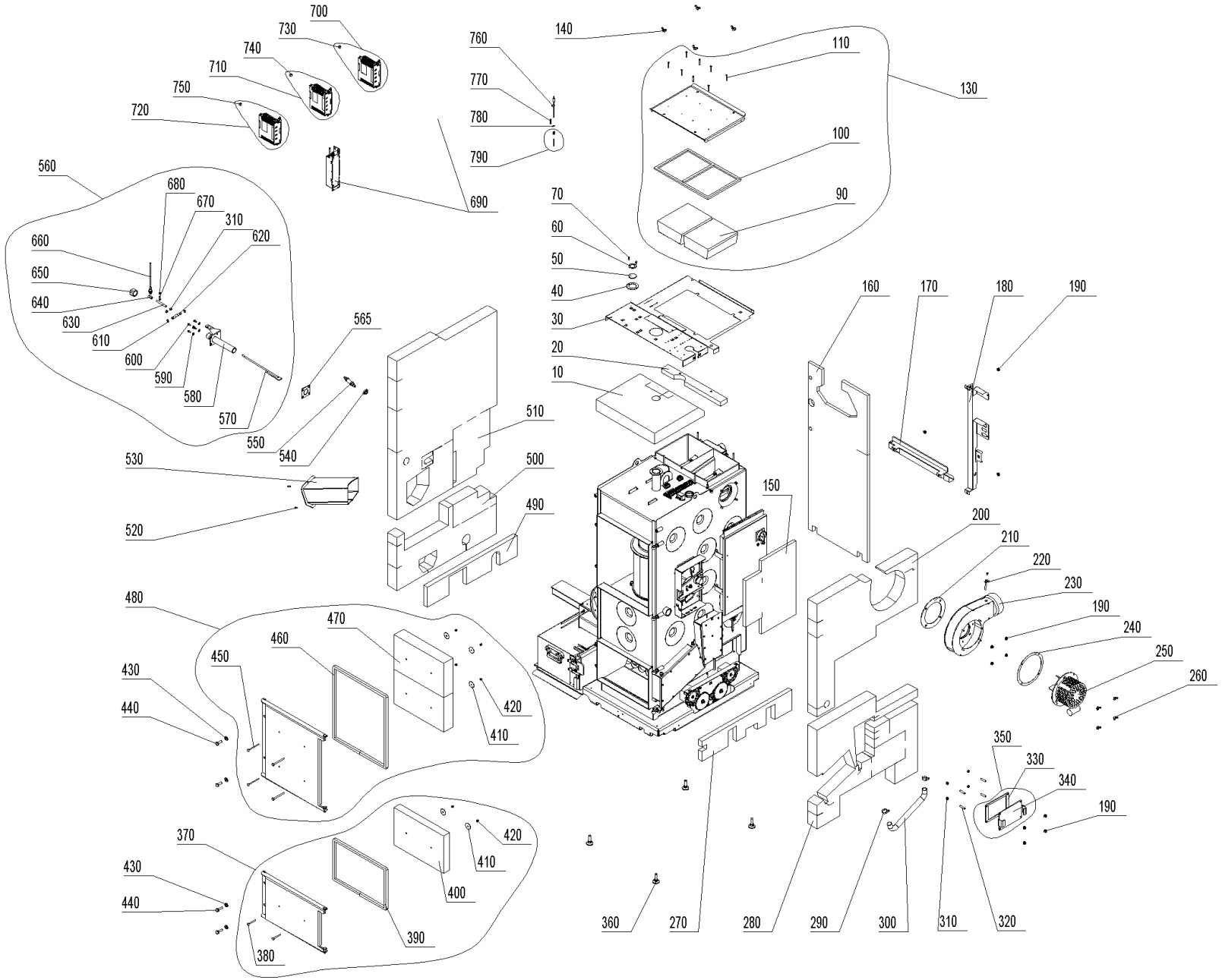

Kessel (A000227)

Pos.	Artikelnr.	Bezeichnung	Menge	Einheit
10	053835	Isolierung oben PW72-103	1.00	Stk
20	053836	Isolierung oben hinten PW72-103	1.00	Stk
30	053837	Isolierabdeckung oben PW72-103	1.00	Stk
40	051712	Dichtung Schauloch PW24-103	1.00	Stk
50	000307	Glasscheibe Ø 45/4 PW24-103	1.00	Stk
60	087300	Rosette Schauloch PW24-103	1.00	Stk
70	031545	Gewindefurchende Sechskantschraube DIN 7500 - M5x12, verzinkt	2.00	Stk
90	053657	Isolierstein NHF rechts PW72-103	1.00	Stk
90	053656	Isolierstein NHF links PW72-103	1.00	Stk
100	053658	Dichtschnur Reinigungsdeckel PW72-103	1.00	Stk
110	016719	Linsen-Bohrschraube DIN 7504N - 4,2x38	8.00	Stk
130	055811	Reinigungsdeckel mont. PW72-103	1.00	Stk
140	019414	Flügelmutter ähnl. DIN 315 - M8 - St - verzinkt	4.00	Stk
150	053839	Isolierung Schaltfeld PW72-103	1.00	Stk
160	053846	Isolierung hinten oben PW72-103	1.00	Stk
170	052996	Kabelschacht unten PW24-103	1.00	Stk
180	052704	Kabelschacht senkrecht PW24-103	1.00	Stk
190	016553	Sperrzahnmutter M8 verzinkt	11.00	Stk
200	053844	Isolierung rechts oben PW72-103	1.00	Stk
210	054947	Sekundärluftdichtung mitte 1	1.00	Stk
220	041498	Schutzrohr Rauchgasfühler	1.00	Stk
230	055812	Gebläsekasten PW72-103	1.00	Stk

Kessel (A000227)

Pos.	Artikelnr.	Bezeichnung	Menge	Einheit
250	006241	Motor Saugzuggebläse PW72-103	1.00	Stk
260	019410	Flügelmutter DIN315 - M6	6.00	Stk
270	053840	Isolierung rechts innen PW72-103	1.00	Stk
280	053845	Isolierung rechts unten PW72-103	1.00	Stk
290	029424	IDEAL-Schlauchklemmen 20-32mm	2.00	Stk
300	052989	Schlauch Silikon SG1M PW24-103	1.00	Stk
310	031154	Mutter DIN934 - M8 - A4	4.00	Stk
320	016163	Gewindestift DIN913 - M8x40-A2	4.00	Stk
330	047190	Dichtung Abdeckblech PW24-103	1.00	Stk
340	047188	Abdeckblech PW24-103	1.00	Stk
350	047991	Deckel für Nachheizflächen unten BW XL, PW24-103	1.00	Stk
360	009994	Stellfuß	4.00	Stk
370	055813	Aschetür mont. PW72-103	1.00	Stk
380	016190	Flachrundschraube M6x90	2.00	Stk
390	053672	Dichtschnur Aschetür PW72-103	1.00	Stk
400	053831	Isolierstein Aschetür PW72-103	1.00	Stk
410	016191	Karosserie Scheibe M6 A2 6,4x40x1,5	6.00	Stk
420	016192	Hutmutter hohe Form DIN1587 - M6 A2	6.00	Stk
430	017183	U-Scheibe DIN125 - M12	4.00	Stk
440	017865	Sechskantschraube M12x35 - 8.8	4.00	Stk
450	016190	Flachrundschraube M6x90	4.00	Stk
460	053660	Dichtschnur Heiztür PW72-103	1.00	Stk

Kessel (A000227)

Pos.	Artikelnr.	Bezeichnung	Menge	Einheit
470	053661	Isolierstein Heiztür PW72-103	2.00	Stk
480	055814	Heiztür mont. PW72-103	1.00	Stk
490	053841	Isolierung links innen PW72-103	1.00	Stk
500	053843	Isolierung links unten PW72-103	1.00	Stk
510	053842	Isolierung links PW72-103	1.00	Stk
520	020095	Linsensenkschraube TT, DIN 7500ME M5x16 verz.	2.00	Stk
530	053674	Schneckenrohr kpl. PW72-103	1.00	Stk
540	007094	Isolierring Lambdasonde	1.00	Stk
550	051646	Lambdasonde NGK inkl. Kabel	1.00	Stk
560	053680	Level Control montiert PW72-103	1.00	Stk
565	053551	Dichtung Deckel Entaschung PW72-103	1.00	Stk
570	053683	Fühler kpl. PW72-103	1.00	Stk
580	052734	Level Controll Rohr kpl. PW24/30, PW72-103	1.00	Stk
590	020540	U-Scheibe DIN 134 - M6	4.00	Stk
600	017051	Sechskantschraube DIN 933 - M6x12 - 8.8	4.00	Stk
610	052174	Sicherungsring DIN 471 - 12 X 1	2.00	Stk
620	052099	Level Controll Achse PW24-103	1.00	Stk
630	017032	Gewindebolzen M8x80 verzinkt	1.00	Stk
640	048554	Verlängerungsmutter M8	1.00	Stk
650	008850	Kappe Nr. 300, 1" schwarz	1.00	Stk
660	007657	Näherungsschalter M12 induktiv PW24-103	1.00	Stk
670	015471	Sechskantschraube DIN 933 - M6x20 - 8.8 - verzinkt	1.00	Stk

Kessel (A000227)

Pos.	Artikelnr.	Bezeichnung	Menge	Einheit
680	016594	Mutter DIN 934 - M6 - 8 - verzinkt	1.00	Stk
690	054185	Filter zu FU, 0,75kW, 1-Phase	2.00	Stk
700	055837	ET-SET: FU mit Eprom TANK 100 zu Zuführung pneumatisch PW72-103 zu Motor Lenze	1.00	Stk
710	054847	ET-SET: FU mit Eprom RAS zu Zuführung direkt PW24-103 zu Motor Lenze	1.00	Stk
720	054849	ET-SET: FU mit Eprom TANK zu Zuführung pneumatisch PuroWIN	1.00	Stk
730	054197	Eprom auf STOK program. zu FU PuroWIN Zuführung direkt / pneumatisch zu Motor Lenze	1.00	Stk
740	054196	Eprom RAS program. zu FU PuroWIN Zuführung direkt zu Motor Lenze	1.00	Stk
750	055838	Eprom auf TANK 100 program. zu FU PuroWIN 72-103 Zuführung pneumatisch zu Motor Lenze	1.00	Stk
760	007626	Thermoelement 2AB NM30/110 mm TI/DI 2AB25 2,5 (Brennkammer- bzw. Thermocontrollfühler)	1.00	Stk
770	050647	Feder Brennkammer-Fühler	1.00	Stk
780	031274	Öse M6	1.00	Stk
790	051069	Schutzrohr BK-Fühler kpl.	1.00	Stk
800	009185	Netzfilter FN2020-10-06 PW24-103	1.00	Stk
810	016594	Mutter DIN 934 - M6 - 8 - verzinkt	1.00	Stk

Verkleidung (A000228)

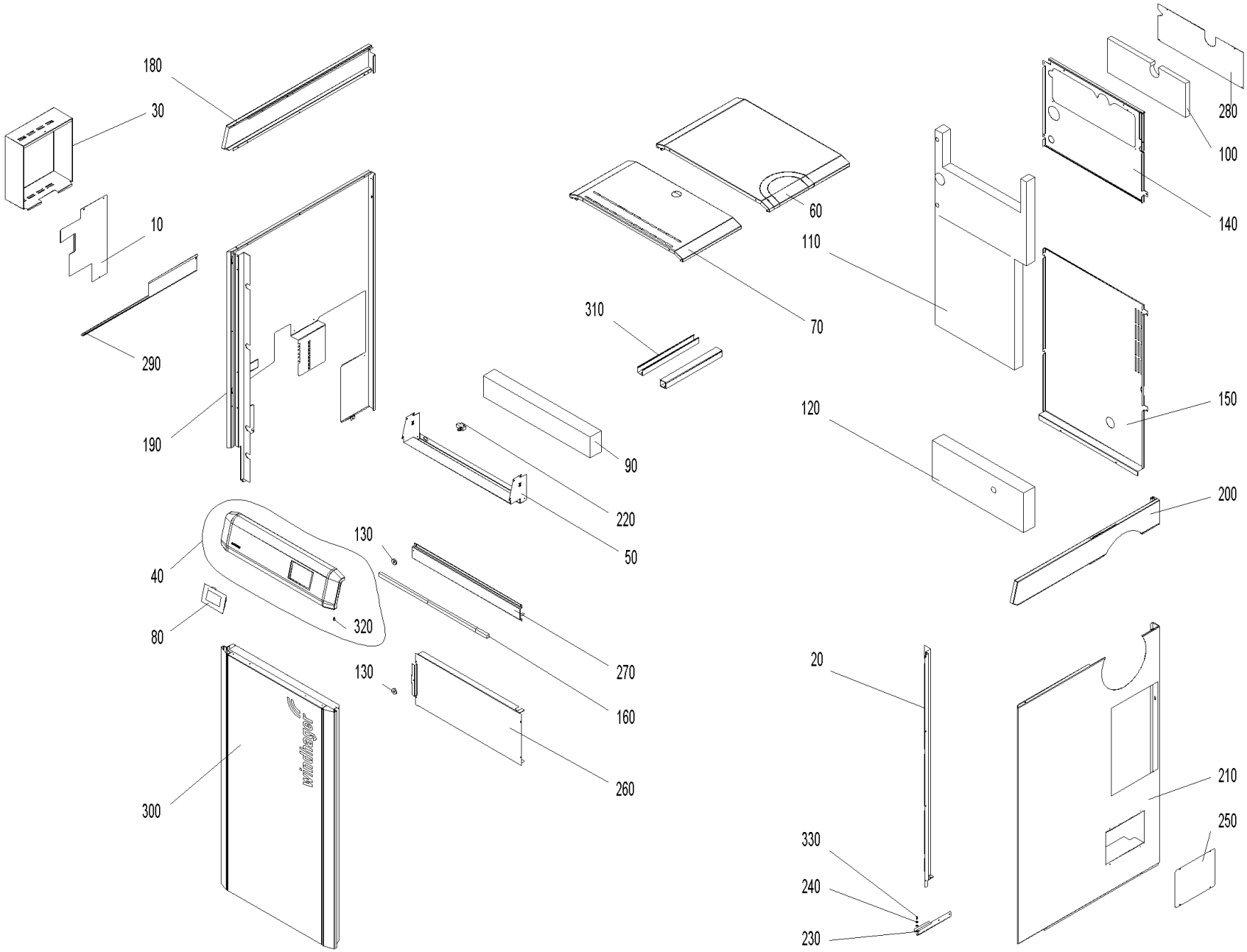

Verkleidung (A000228)

Pos.	Artikelnr.	Bezeichnung	Menge	Einheit
10	054622	Abdeckung Seitenwand links unten PW72-103	1.00	Stk
20	054602	Abdeckung Seitenwand rechts PW72-103	1.00	Stk
30	053812	Abdeckung Steckerkonsole PW24-103	1.00	Stk
40	055397	Bedienfeld PW72-103	1.00	Stk
50	054624	Befestigungsblech Verkleidung PW72-103	1.00	Stk
60	054619	Deckel hinten PW72-103	1.00	Stk
70	054620	Deckel vorne PW72-103	1.00	Stk
80	001009	INF8 MES INFINITY InfoWIN Touch BW2T, LWPT, PW24-103, BW2P, AEHM inkl. Masterfunktion und Webserver	1.00	Stk
90	011175	Isolierung Bedienfeld PW72-103	1.00	Stk
100	011174	Isolierung Heizflächenreinigung oben PW72-103	1.00	Stk
110	011173	Isolierung Rückwand oben PW72-103	1.00	Stk
120	011172	Isolierung Rückwand unten PW72-103	1.00	Stk
130	001761	Magnet Ø31 gummiummantelt	1.00	Stk
140	054610	Rückwand oben PW72-103	1.00	Stk
150	054609	Rückwand unten PW72-103	1.00	Stk
160	009623	Schallisolierung Verkleidung PW72-103	3.00	Stk
170	016489	Schnappmutter 0536/17 vz.	1.00	Stk
180	054617	Seitenwand links oben PW72-103	1.00	Stk
190	055398	Seitenwand links PW72-103	1.00	Stk
200	054618	Seitenwand rechts oben PW72-103	1.00	Stk
210	054616	Seitenwand rechts unten PW72-103	1.00	Stk
210	016489	Schnappmutter 0536/17 vz.	7.00	Stk

Verkleidung (A000228)

Pos.	Artikelnr.	Bezeichnung	Menge	Einheit
220	007128	Türschalter (Mikroschalter) LWP18-50, BWXL 35-60, LWK, LWPT, PW	1.00	Stk
230	054164	Türangel unten PW72-103	1.00	Stk
240	018309	U-Scheibe DIN 134 - M5	1.00	Stk
250	053814	Verkleidung Abdeckung Reinigungsdeckel PW24-103	1.00	Stk
260	054606	Verkleidung Abdeckung vorne mitte PW72-103	1.00	Stk
270	054608	Verkleidung Abdeckung vorne oben PW72-103	1.00	Stk
280	054611	Verkleidung Deckel Heizflächenreinigung oben PW72-103	1.00	Stk
290	054625	Verkleidung Schiene links PW72-103	1.00	Stk
300	055396	Verkleidung Tür kpl. PW72-103	1.00	Stk
310	050978	Wand und Deckenkanal BW2, PW24-103	1.00	M
320	015507	Zapfenschraube M5x18	1.00	Stk
330	033092	Zapfenschrauben DIN927 - M5X5	1.00	Stk

Entaschung (A000229)

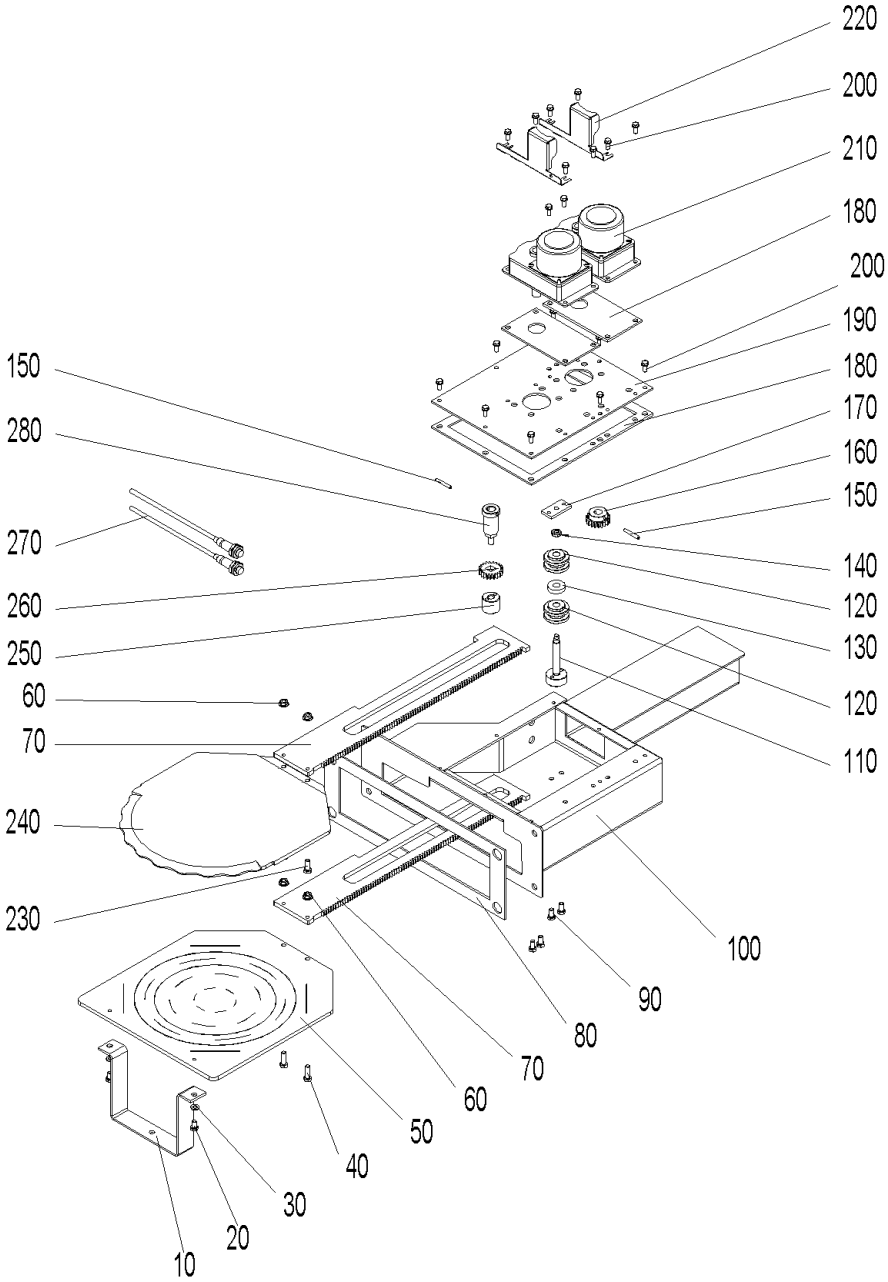

Entaschung (A000229)

Pos.	Artikelnr.	Bezeichnung	Menge	Einheit
10	053553	Ascheverdrängblech PW72-103	1.00	Stk
20	015026	Sechskantschraube DIN 933 - M6x10 - 8.8 - verzinkt	2.00	Stk
30	031713	Scheibe ISO 7089 - 6 - A2	2.00	Stk
40	015471	Sechskantschraube DIN 933 - M6x20 - 8.8 - verzinkt	2.00	Stk
50	052163	Ascheschieber PW40-103	1.00	Stk
60	016566	Sperrzahnmutter M6 verzinkt	4.00	Stk
70	053667	Zahnstange oben PW72-103	2.00	Stk
80	052152	Dichtung Fl. Entaschung PW24-103	1.00	Stk
90	017051	Sechskantschraube DIN 933 - M6x12 - 8.8	4.00	Stk
100	053531	Konsole Entaschung PW72-103	1.00	Stk
110	052153	Welle Lagerung PW24-103	1.00	Stk
120	007125	Lagerung Rüttelantrieb	4.00	Stk
130	052149	Distanzscheibe PW24-103	1.00	Stk
140	016659	Mutter DIN439 - M 8	1.00	Stk
150	018665	Spiral Spannstift DIN 7344 - 4x30	2.00	Stk
160	052154	Stirnrad PW24-103	1.00	Stk
170	052150	Lagerungsblech PW24-103	1.00	Stk
180	053551	Dichtung Deckel Entaschung PW72-103	1.00	Stk
190	053549	Deckel oben Entaschung PW72-103	1.00	Stk
200	031545	Gewindefurchende Sechskantschraube DIN 7500 - M5x12, verzinkt	18.00	Stk
210	053641	Motor - Entaschung PW24-103	2.00	Stk
220	054167	Kabelabdeckung Motor Entaschung PW24-103	2.00	Stk

Entaschung (A000229)

Pos.	Artikelnr.	Bezeichnung	Menge	Einheit
230	024768	Sechskantschraube DIN 933 - M6x16 - A4 - besch. mit Gleitlack bc2571 (bis 600°C)	2.00	Stk
240	055453	Glutbettschieber PW72-103	1.00	Stk
250	054944	Lagerung Welle PW72-103	1.00	Stk
260	054946	Stirnrad M1,5 Z21 PW72-103	1.00	Stk
270	007657	Näherungsschalter M12 induktiv PW24-103	2.00	Stk
280	054943	Antriebswelle PW72-103	1.00	Stk

Brennkammer (A000230)

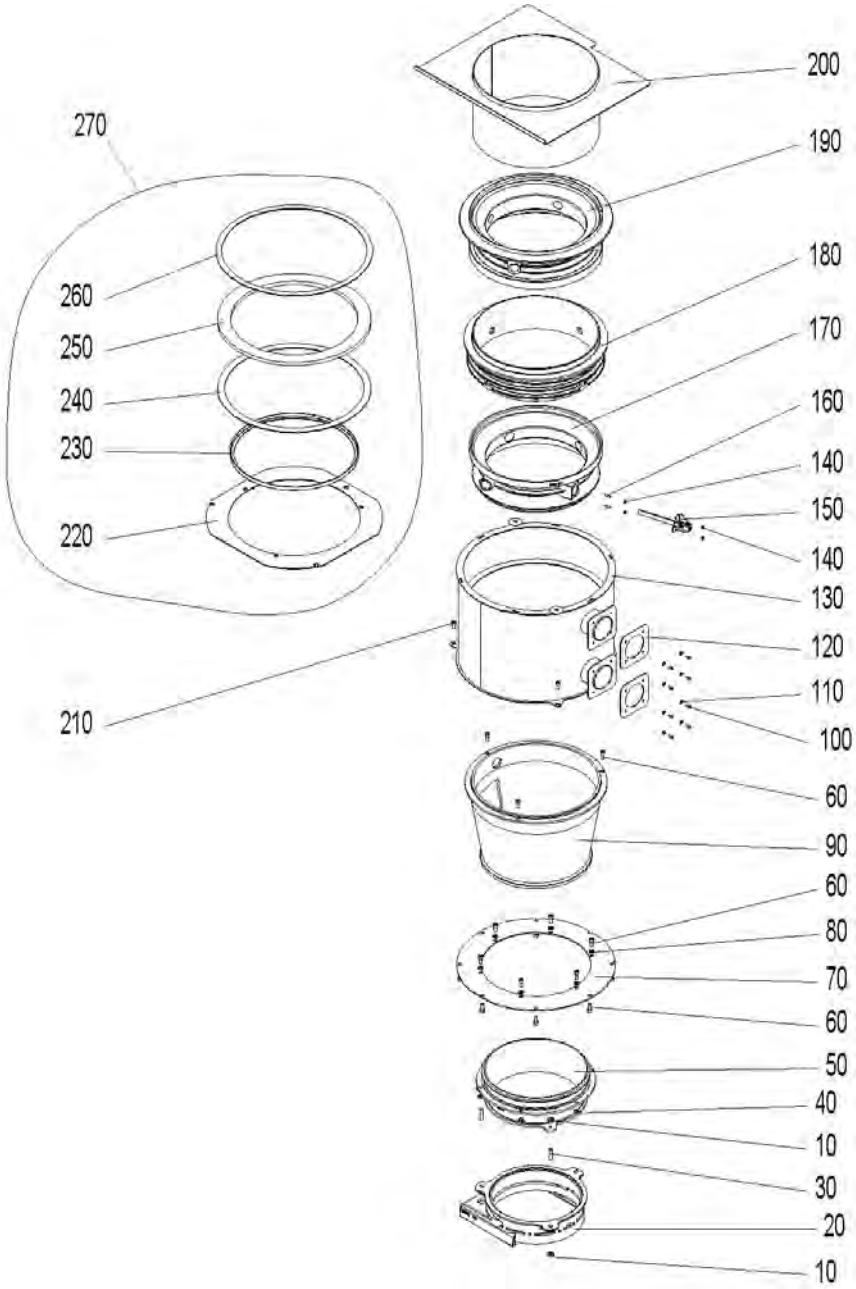

Brennkammer (A000230)

Pos.	Artikelnr.	Bezeichnung	Menge	Einheit
10	031155	Mutter DIN 934 - M10 - A4	6.00	Stk
20	052866	Konus D270 PW40-103	1.00	Stk
30	052061	Gewindestift M10x40 A2	3.00	Stk
40	031154	Mutter DIN934 - M8 - A4	6.00	Stk
50	054939	Vergaserrohr unten PW72-103	1.00	Stk
60	053834	Zylinderschraube m. Innensechskant M8 x 20 - A4	17.00	Stk
70	054942	Befestigungsblech Vergaserrohr PW72-103	1.00	Stk
80	024779	U-Scheibe ISO 7089 - 8 - A2	6.00	Stk
90	054938	Vergaserrohr PW72-103	1.00	Stk
100	017020	Sechskantschraube DIN 933 - M5x12 - A2	8.00	Stk
110	018309	U-Scheibe DIN 134 - M5	8.00	Stk
120	052088	Brennerdichtung rechts PW24-103	2.00	Stk
130	053506	Brenner kpl. PW72-103	1.00	Stk
140	017035	Mutter DIN 934 - M5 - A2	4.00	Stk
150	054951	Sekundärluftzündung kpl. PW72-103	1.00	Stk
160	054158	Gewindestifte mit ISK und Kegelkuppe ISO4026/DIN 913 M 5X 20 Edelstahl A2	2.00	Stk
170	053514	Sekundärluftdüse unten PW72-103	1.00	Stk
180	053515	Sekundärluftdüse oben PW72-103	1.00	Stk
190	053516	Tertiärluftdüse PW72-103	1.00	Stk
200	053517	Vergaserrohr oben PW72-103	1.00	Stk
210	016773	Zylinderschraube m. Innensechskant ISO 4762 - M 8 x 16 - 8.8 (DIN 912)	3.00	Stk
220	053498	Dichtung Brennerflansch PW72-103	1.00	Stk

Brennkammer (A000230)

Pos.	Artikelnr.	Bezeichnung	Menge	Einheit
230	054953	Sekundärluftdichtung mitte PW72-103	1.00	Stk
240	053524	Dichtung Sekundärluft PW72-103	1.00	Stk
250	053521	Dichtung Sekundärluft /Tertiärluft PW72-103	1.00	Stk
260	053523	Tertiärluftdichtung PW72-103	1.00	Stk
270	055810	Dichtungsset PW72-103	1.00	Stk

Ascheaustragung (A000154)

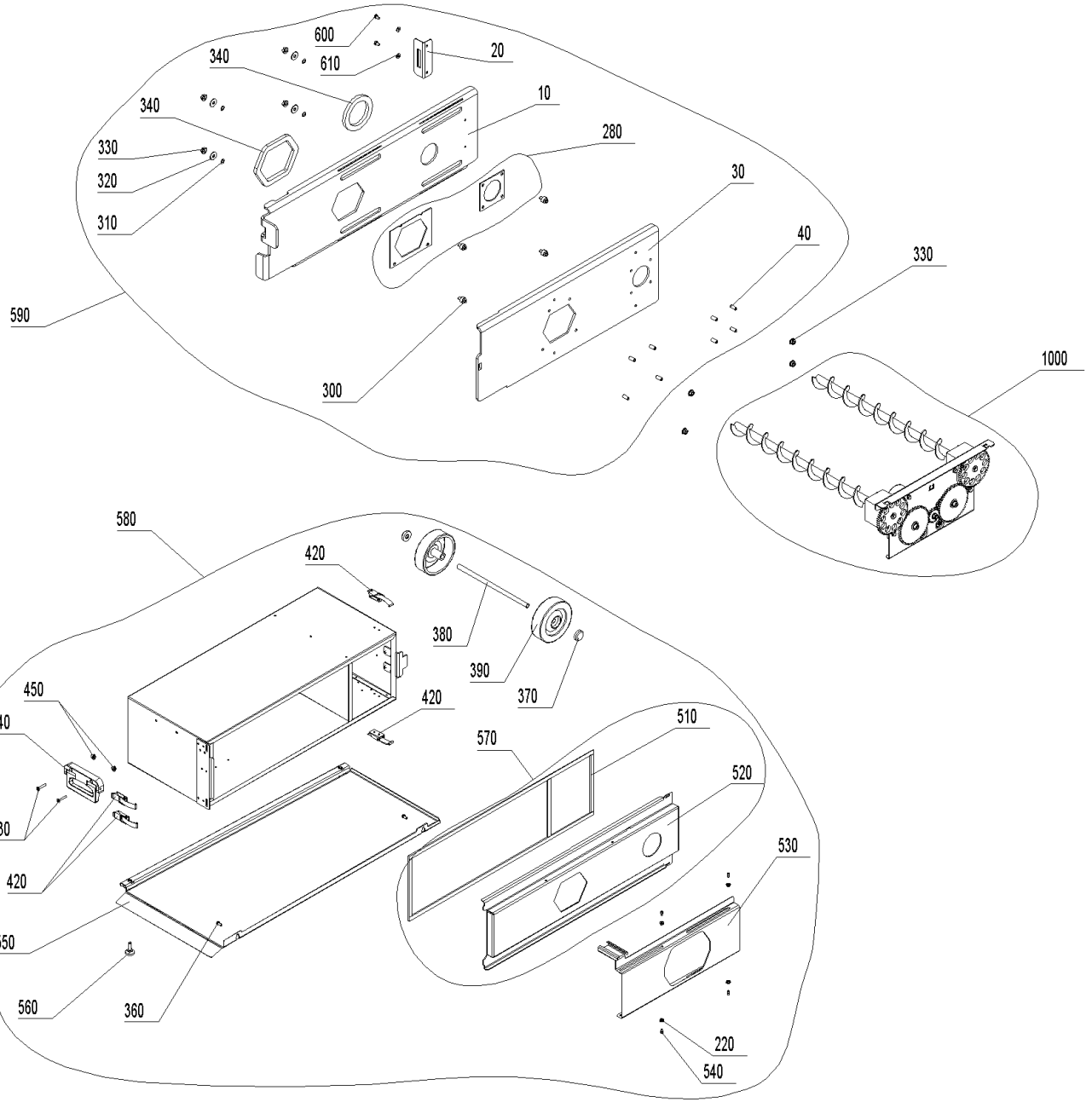

Ascheaustragung (A000154)

Pos.	Artikelnr.	Bezeichnung	Menge	Einheit
10	055157	Schieber Ascheboxflansch PW24-103	1.00	Stk
20	055158	Arretierung Aschebox PW24-103	1.00	Stk
30	055156	Flansch Aschebox PW24-103	1.00	Stk
40	033536	Gewindestift M8 x 20 VZ, DIN 913	8.00	Stk
220	016565	Sperrzahnmutter M5 verzinkt	4.00	Stk
280	055089	Dichtung Ascheboxflansch vorne und hinten PW24-103	1.00	Stk
300	055159	Bolzen Ascheschieber PW24-103	4.00	Stk
310	055132	Passscheibe D14	16.00	Stk
320	031756	U-Scheibe ISO 7093	4.00	Stk
330	016553	Sperrzahnmutter M8 verzinkt	4.00	Stk
340	055241	Silikon Vierkantprofil 15x10 mm,	0.78	M
360	031545	Gewindefurchende Sechskantschraube DIN 7500 - M5x12, verzinkt	2.00	Stk
370	006889	Sicherungsscheibe Ø12 mit Kunststoffkappe	2.00	Stk
380	051379	Achse Aschebox BW2, BW2T, BW2P	1.00	Stk
390	006888	Rad AG 125-12 Vollgummi Aschebehälter	2.00	Stk
420	009546	Spannverschluss	4.00	Stk
430	054573	Senkschraube M6x30 DIN965	2.00	Stk
440	054570	Griff PW24-103	1.00	Stk
450	016566	Sperrzahnmutter M6 verzinkt	2.00	Stk
510	054571	Dichtung Aschelade PW24-103	1.00	Stk
520	056206	Aschebox De. kpl. RAL 7012 FS PW	1.00	Stk
530	054494	Aschebox Verschluß PW24-103	1.00	Stk

Ascheaustragung (A000154)

Pos.	Artikelnr.	Bezeichnung	Menge	Einheit
540	033092	Zapfenschrauben DIN927 - M5X5	4.00	Stk
550	056207	Aschebox Sockel RAL 7012 FS PW	1.00	Stk
560	055141	Stellfuß PW24-103	2.00	Stk
570	054576	Aschebox Deckel kpl. PW24-103	1.00	Stk
580	052700	PWZ050 Aschebox zu Hackgut-Vergaser Abmessungen ohne Griff u. ohne Räder: BxHxT ca. 342x225x744mm Nutzvolumen: 50L Abmessungen in	1.00	Stk
590	055218	Ascheschieber kpl. PW24-103	1.00	Stk
600	015026	Sechskantschraube DIN 933 - M6x10 - 8.8 - verzinkt	2.00	Stk
610	020540	U-Scheibe DIN 134 - M6	2.00	Stk
1000	A000257	Schnecken m. Antrieb	1.00	Stk

Schnecken m. Antrieb (A000257)

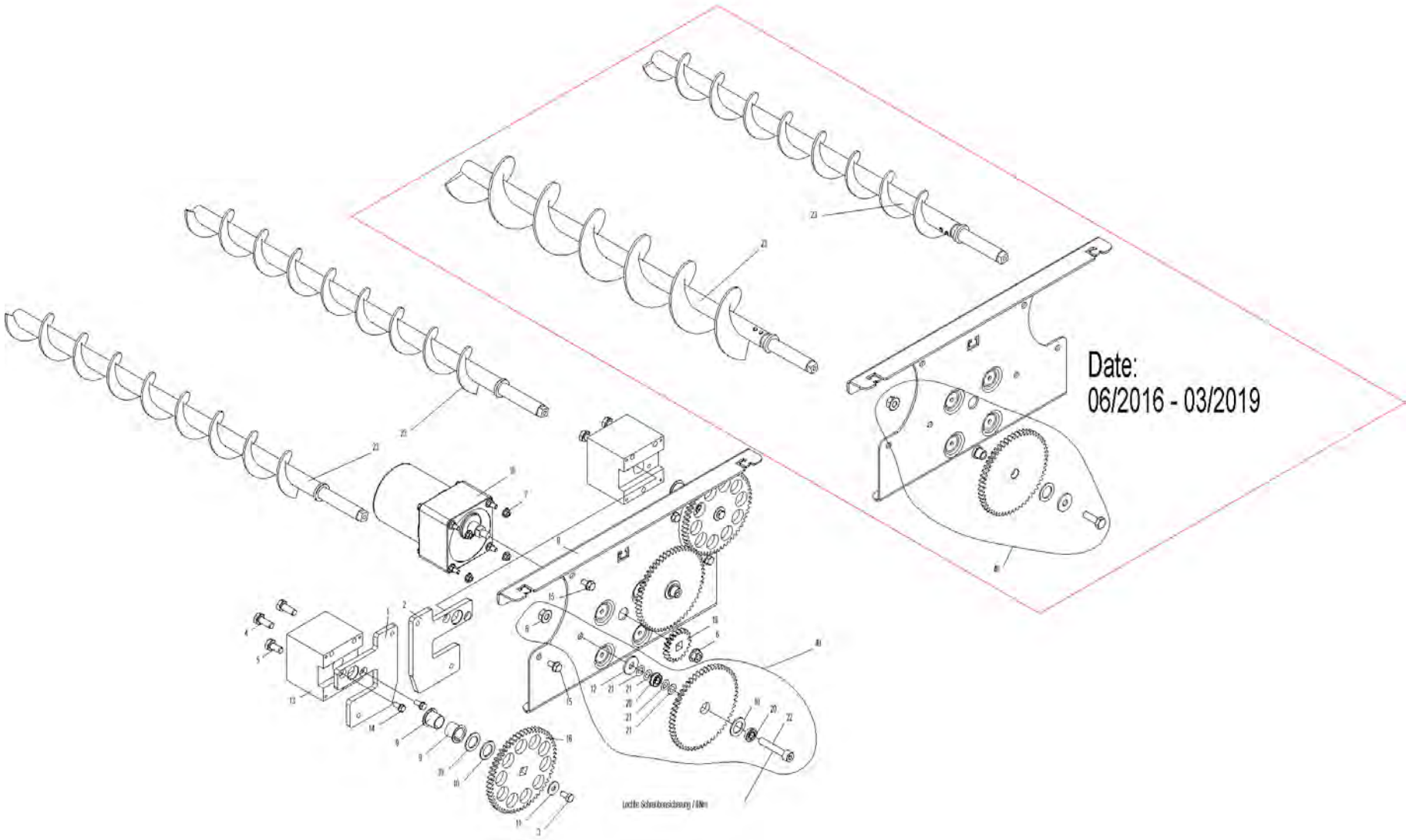

Schnecken m. Antrieb (A000257)

Pos.	Artikelnr.	Bezeichnung	Menge	Einheit
1	051169	Flanschplatte links AAT PW24-103	1.00	Stk
2	052371	Flanschplatte rechts AAT PW24-103	1.00	Stk
3	017051	Sechskantschraube DIN 933 - M6x12 - 8.8	2.00	Stk
4	017086	Sechskantschraube DIN 933 - M8x20 - 8.8 - verzinkt	4.00	Stk
5	016721	Sechskantschraube DIN 933 - M8x16 - 8.8, schwarz	1.00	Stk
6	016553	Sperrzahnmutter M8 verzinkt	3.00	Stk
7	016565	Sperrzahnmutter M5 verzinkt	4.00	Stk
8	052197	Konsole AAT PW24-103	1.00	Stk
9	012508	Gleitlager-Bundbuchse	4.00	Stk
10	047545	Scheibe D25/16,2x1,5 verz.	6.00	Stk
11	031753	U-Scheibe DIN125 - M6 - A2	2.00	Stk
12	031755	U-Scheibe DIN 9021 - M8	2.00	Stk
13	047920	Flansch für Ascheaustragung BW35-60, PW24-103	2.00	Stk
14	031545	Gewindefurchende Sechskantschraube DIN 7500 - M5x12, verzinkt	4.00	Stk
15	031549	Sechskantschraube DIN 7500 - M6x12	4.00	Stk
16	052196	Stirnrad Schnecke PW24-103	2.00	Stk
18	050901	Schneckenmotor SPG 4,8 U/min	1.00	Stk
19	053412	Stirnrad Motor geh. M2 Z20	1.00	Stk
20	055728	Rillenkugellager - mit Bund F688 ZZ-8x16x5	4.00	Stk
21	055132	Passscheibe D14	8.00	Stk
22	018172	Zylinderschraube m. Innensechskant ISO 4762 - M 8 x 45 - 8.8 - verzinkt (DIN 912)	2.00	Stk
23	055916	Austragungsschnecke 2 PW72-103	2.00	Stk

Schnecken m. Antrieb (A000257)

Pos.	Artikelnr.	Bezeichnung	Menge	Einheit
23	055918	Austragungsschnecke 1 PW24-60	2.00	Stk
40	055945	Zwischenrad 1/2 kpl. AA PuroWIN	2.00	Stk

Ascheaustragung in Tonne (A000250)

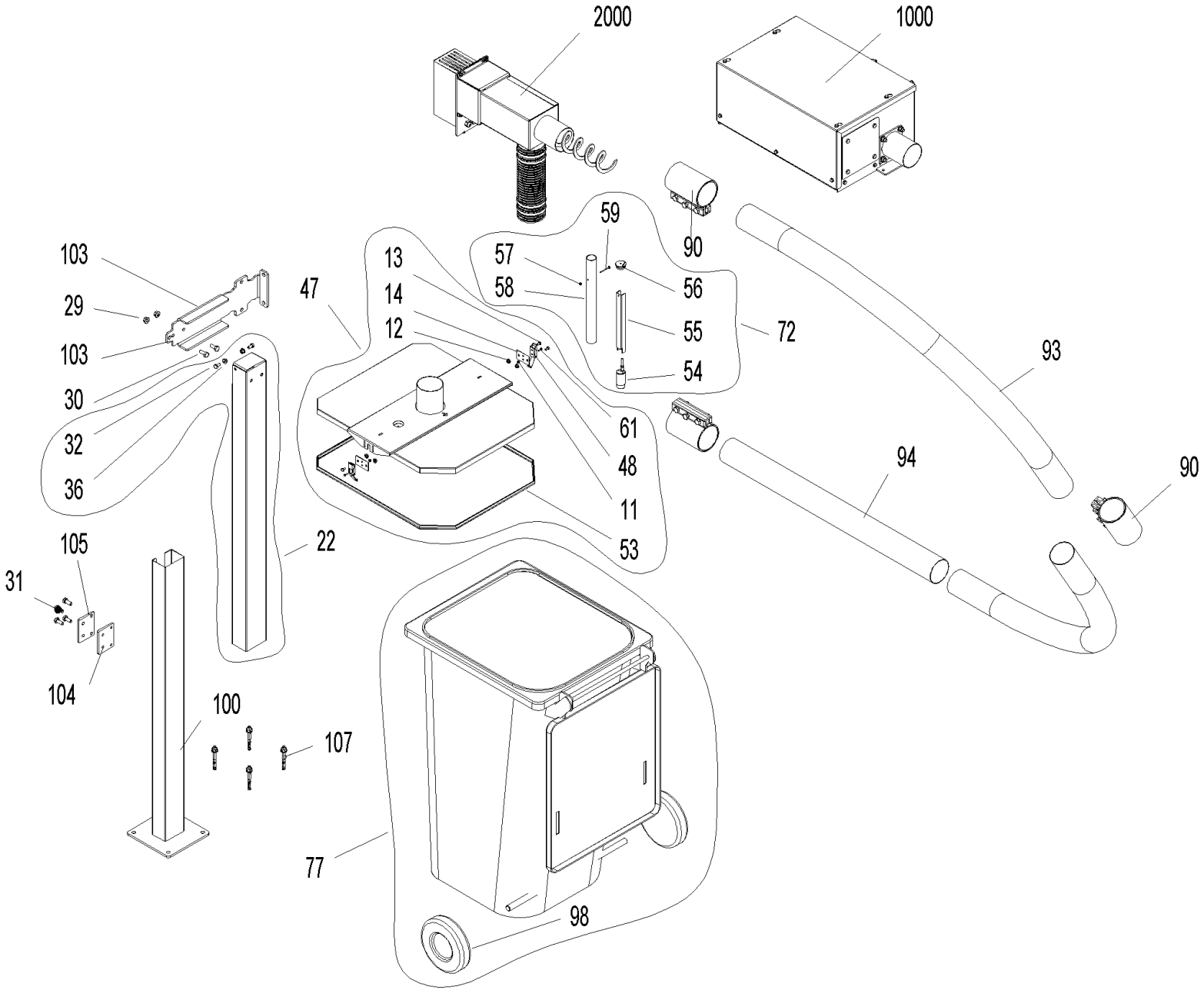

Ascheaustragung in Tonne (A000250)

Pos.	Artikelnr.	Bezeichnung	Menge	Einheit
11	016564	Sperrzahnmutter M4 verzinkt	2.00	Stk
12	016566	Sperrzahnmutter M6 verzinkt	4.00	Stk
13	015026	Sechskantschraube DIN 933 - M6x10 - 8.8 - verzinkt	4.00	Stk
14	055944	Einstellplatte De.	2.00	Stk
22	055942	Stütze oben Förderrohr	1.00	Stk
29	016567	Sperrzahnmutter M10 verzinkt	2.00	Stk
31	054526	Sechskantschraube DIN 933 - M10x25 - 8.8 - verzinkt	6.00	Stk
32	015134	Sechskantschraube DIN 933 - M8x16 - 8.8 - verzinkt	2.00	Stk
36	016553	Sperrzahnmutter M8 verzinkt	2.00	Stk
47	055510	PWZ Abdeckung Tonne zu Ascheaustragung	1.00	Stk
48	009546	Spannverschluss	2.00	Stk
53	053467	Dichtungsprofil Vorratsbehälter 200KG und Ascheaustragung in Tonne BW2, BW2T 10-33, BWL10-26, PW	1.00	Stk
54	006821	Näherungsschalter mit Anschlußkabel 2m	1.00	Stk
55	055035	Fixierung Näherungsschalter	1.00	Stk
56	051316	Stopfen GPN 300 F 242 gebohrt Ø5	1.00	Stk
57	016724	Sicherungsmutter DIN 985 - M 4 - 8 - verzinkt	1.00	Stk
58	046190	Einbringrohr Näherungsschalter PW Zuführung	1.00	Stk
59	016752	Sechskantschraube DIN 933 - M4x40 - 8.8 - verzinkt	1.00	Stk
61	055014	Sechskantschraube DIN 933 - M4x12 - 8.8 - verzinkt	2.00	Stk
72	056097	PWZ032 Überwachung Füllstand Aschetonne	1.00	Stk
77	055515	PWZ031 Aschetonne 240 Liter Stahl verzinkt (verstärkte Radausführung)	1.00	Stk
90	055513	PWZ Rohrkupplung DVK HD mit Erdungsband Nenn-Ø88,9, Baulänge 150 (EPDM-Dichtung,	3.00	Stk

Ascheaustragung in Tonne (A000250)

Pos.	Artikelnr.	Bezeichnung	Menge	Einheit
		Anzugsmoment max: 80Nm)		
93	055495	PWZ Rohrbogen 88,9 x R800 NIRO	2.00	Stk
94	055496	PWZ Rohr 90 x 1000mm	1.00	Stk
98	055943	Rad Aschetonne 240L	2.00	Stk
100	055750	Stütze unten Förderrohr	1.00	Stk
103	055743	Befestigung oben Förderrohr PW	1.00	Stk
104	055911	Klemmplatte hinten PW	1.00	Stk
105	055749	Klemmplatte Stützfuß PW	1.00	Stk
107	001594	Ankerbolzen FAZ II 10/ 10/ 95	4.00	Stk
1000	A000251	Aschesammelbehälter	1.00	Stk
2000	A000252	Übergabe in Tonne	1.00	Stk

Aschesammelbehälter (A000251)

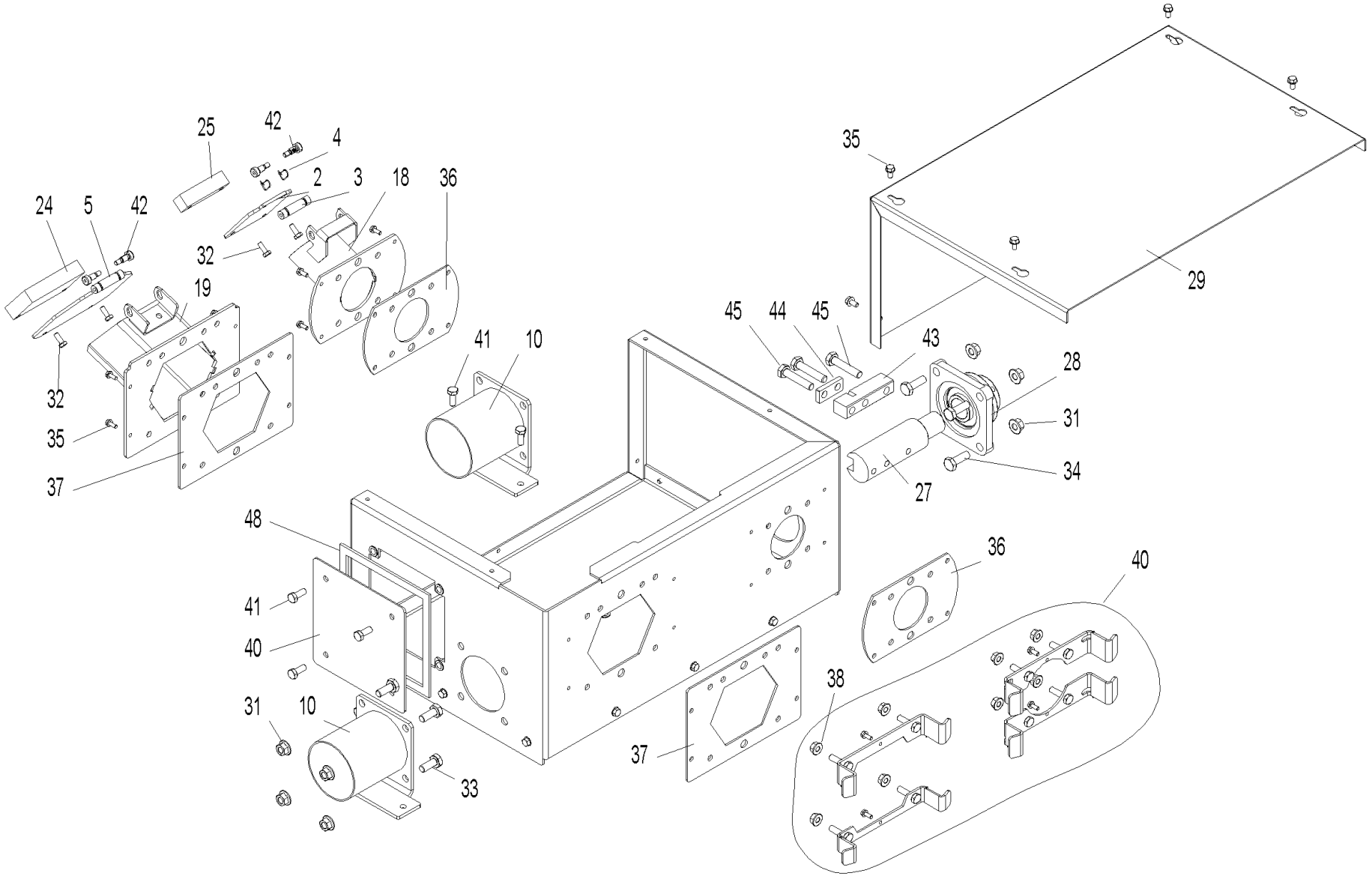

Aschesammelbehälter (A000251)

Pos.	Artikelnr.	Bezeichnung	Menge	Einheit
2	055521	Dichtklappe hinten Aschesammelbehälter PW	1.00	Stk
3	055524	Achse Klappe vorne Aschesammelbehälter PW	1.00	Stk
4	055737	Federbügelklammer Aschesammelbehälter PW	2.00	Stk
5	055676	Dichtklappe vorne Aschesammelbehälter PW	1.00	Stk
10	055680	Rohr Ausgang Aschesammelbehälter PW	1.00	Stk
18	055720	Auslassrohr hinten Aschesammelbehälter PW	1.00	Stk
19	055721	Auslassrohr vorne Aschesammelbehälter PW	1.00	Stk
24	055517	Gewicht Klappe vorne Aschesammelbehälter PW	1.00	Stk
25	055520	Gewicht Klappe hinten Aschesammelbehälter PW	1.00	Stk
27	055690	Welle hinten Schnecke Aschesammelbehälter PW	1.00	Stk
28	052859	Flanschlager mit Berührungsschutz Ø30 Bauhöhe 40,2; 4-Loch; UCF 206 FYH (staubdicht)	1.00	Stk
29	055692	Deckel Übergabe in Tonne Aschesammelbehälter PW	1.00	Stk
31	016567	Sperrzahnmutter M10 verzinkt	2.00	Stk
32	024759	Sechskantschraube DIN 933 - M6x16 - 8.8 - verzinkt	1.00	Stk
33	054526	Sechskantschraube DIN 933 - M10x25 - 8.8 - verzinkt	1.00	Stk
34	054269	Sechskantschraube DIN 933 - M10x30 - 8.8 - verzinkt	1.00	Stk
35	031549	Sechskantschraube DIN 7500 - M6x12	1.00	Stk
36	055710	Dichtung Ascheflansch hinten Aschesammelbehälter PW	1.00	Stk
37	055711	Dichtung Ascheflansch vorne Aschesammelbehälter PW	2.00	Stk
38	016553	Sperrzahnmutter M8 verzinkt	8.00	Stk
40	055704	Wartungsdeckel Asche Aschesammelbehälter PW	1.00	Stk
41	017086	Sechskantschraube DIN 933 - M8x20 - 8.8 - verzinkt	4.00	Stk

Aschesammelbehälter (A000251)

Pos.	Artikelnr.	Bezeichnung	Menge	Einheit
42	055736	Schulterpassschraube 12.9 - 6x12 / ISO 7379 (M6x12)	4.00	Stk
43	055712	Fixierung Schnecke Aschesammelbehälter PW	1.00	Stk
44	055718	Fixierung Schnecke oben Aschesammelbehälter PW	1.00	Stk
45	033099	Sechskantschraube DIN 933 - M10x50 - 8.8	6.00	Stk
48	054532	Dichtung Wartungsdeckel Vorratsbehälter/Aschesammelbehälter	1.00	Stk

Übergabe in Tonne (A000252)

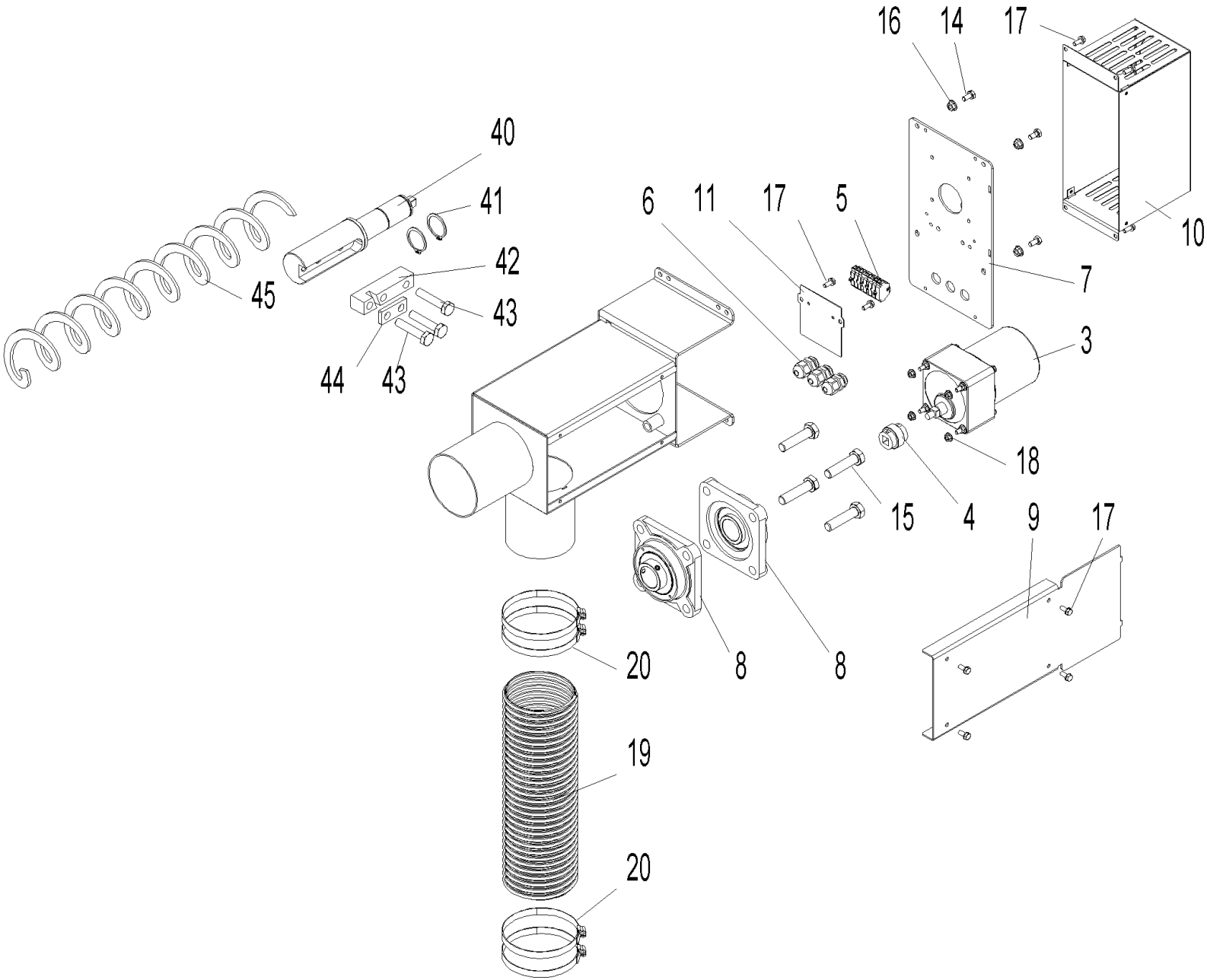

Übergabe in Tonne (A000252)

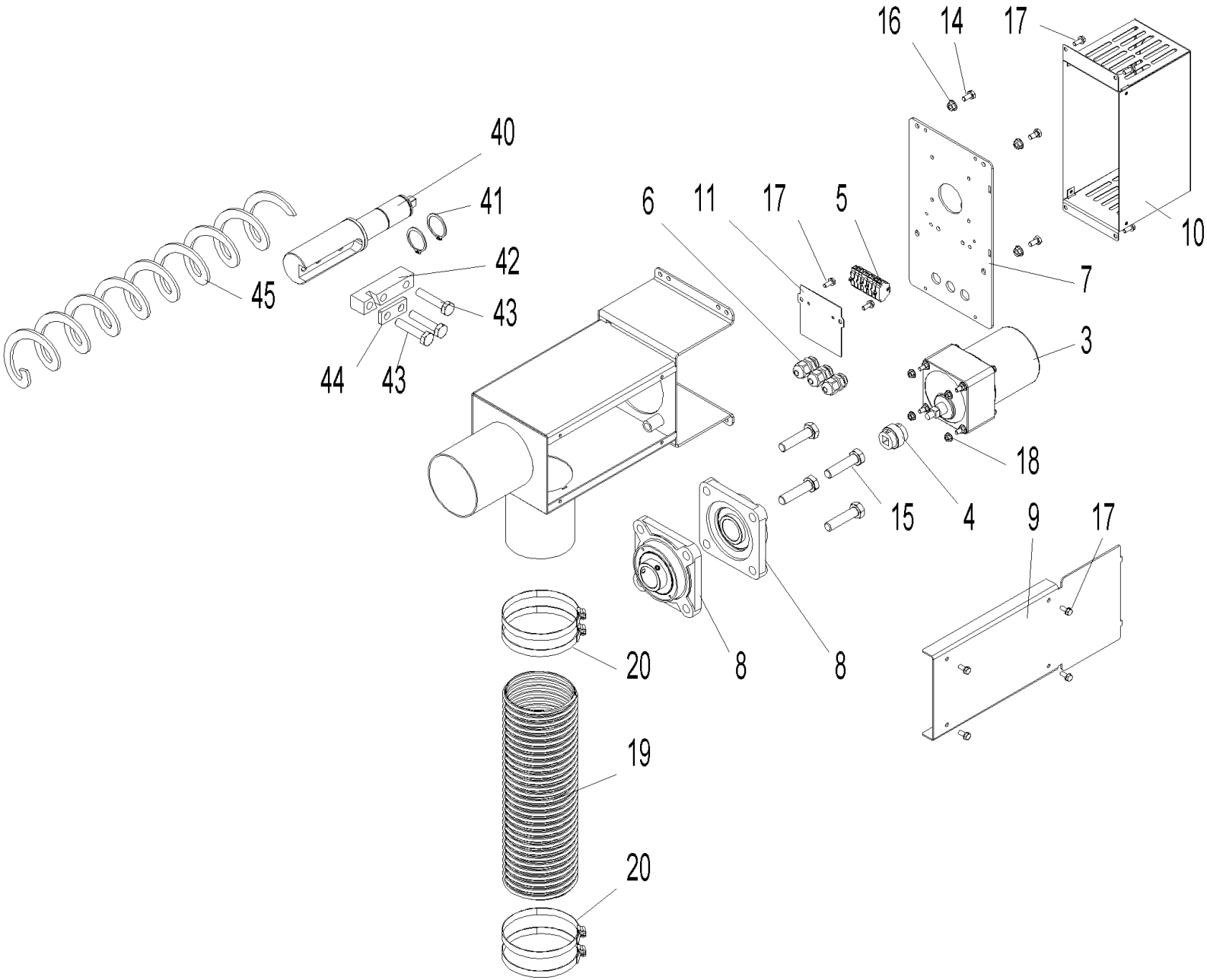

Übergabe in Tonne (A000252)

Pos.	Artikelnr.	Bezeichnung	Menge	Einheit
3	050901	Schneckenmotor SPG 4,8 U/min	1.00	Stk
4	055908	Kupplung 03 Übergabe Tonne PW	1.00	Stk
5	006921	Wagoblock 261 9-polig	1.00	Stk
6	006340	Kabelverschraubung	3.00	Stk
7	055507	Drehmomentenstütze Übergabe Tonne	1.00	Stk
8	052859	Flanschlager mit Berührungsschutz Ø30 Bauhöhe 40,2; 4-Loch; UCF 206 FYH (staubdicht)	2.00	Stk
9	055714	Deckel Übergabe Asche Tonne	1.00	Stk
10	055719	Berührungsschutz Motor Übergabe Tonne PW	1.00	Stk
11	055727	Halteplatte Wago Übergabe Tonne	1.00	Stk
14	017051	Sechskantschraube DIN 933 - M6x12 - 8.8	4.00	Stk
15	033099	Sechskantschraube DIN 933 - M10x50 - 8.8	4.00	Stk
16	016566	Sperrzahnmutter M6 verzinkt	4.00	Stk
17	031545	Gewindefurchende Sechskantschraube DIN 7500 - M5x12, verzinkt	10.00	Stk
18	016565	Sperrzahnmutter M5 verzinkt	4.00	Stk
19	055747	Hochtemperaturschlauch HTD Innen-Ø89mm (Bund mit 4 lfm.)	1.00	M
20	055748	Schlauchklemme (90 bis 100mm)	4.00	Stk
40	055502	Welle Schnecke Übergabe Tonne PW	1.00	Stk
41	055694	Sicherungsring DIN 471 - 30 x 1,5	1.00	Stk
42	055712	Fixierung Schnecke Aschesammelbehälter PW	1.00	Stk
43	033099	Sechskantschraube DIN 933 - M10x50 - 8.8	3.00	Stk
44	055718	Fixierung Schnecke oben Aschesammelbehälter PW	1.00	Stk
45	055508	PWZ Flexible Ascheschnecke (Länge = 5600mm +200/-50)	1.00	Stk

Zündung (A000158)

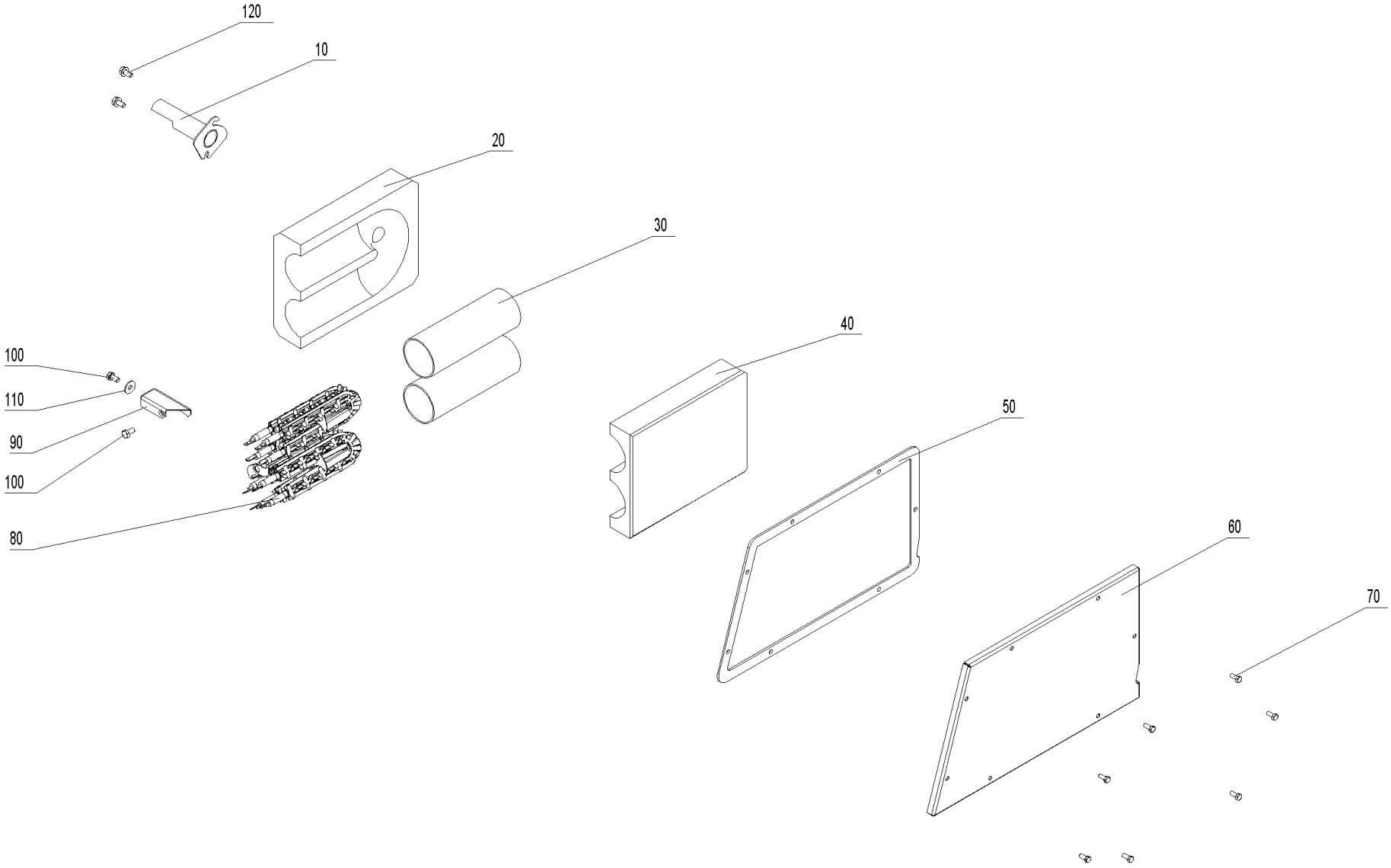

Zündung (A000158)

Pos.	Artikelnr.	Bezeichnung	Menge	Einheit
10	052716	Zündrohr PW24/30	1.00	Stk
10	053668	Zündrohr PW72-103	1.00	Stk
10	052766	Zündrohr PW40-60	1.00	Stk
20	052713	Isolierstein unten Zündung PW24-103	1.00	Stk
30	050489	Zündrohr Zündung LWP, PW24-103	2.00	Stk
40	007484	Isolierstein oben Zündung PW24-103	1.00	Stk
50	052993	Dichtung Zündung PW24-103	1.00	Stk
60	052717	Abdeckung Zündung PW24-103	1.00	Stk
70	017020	Sechskantschraube DIN 933 - M5x12 - A2	7.00	Stk
80	055201	Zündelement BW, FW ab Los15, VAE ab Los6, BWXL, LWK, BW2, BW2T, PW, BWL, BW2P	1.00	Stk
90	052387	Anschlag Zündung PW24-103	1.00	Stk
100	017051	Sechskantschraube DIN 933 - M6x12 - 8.8	2.00	Stk
110	031753	U-Scheibe DIN125 - M6 - A2	1.00	Stk
120	031549	Sechskantschraube DIN 7500 - M6x12	2.00	Stk

Luftregelung PL (A000159)

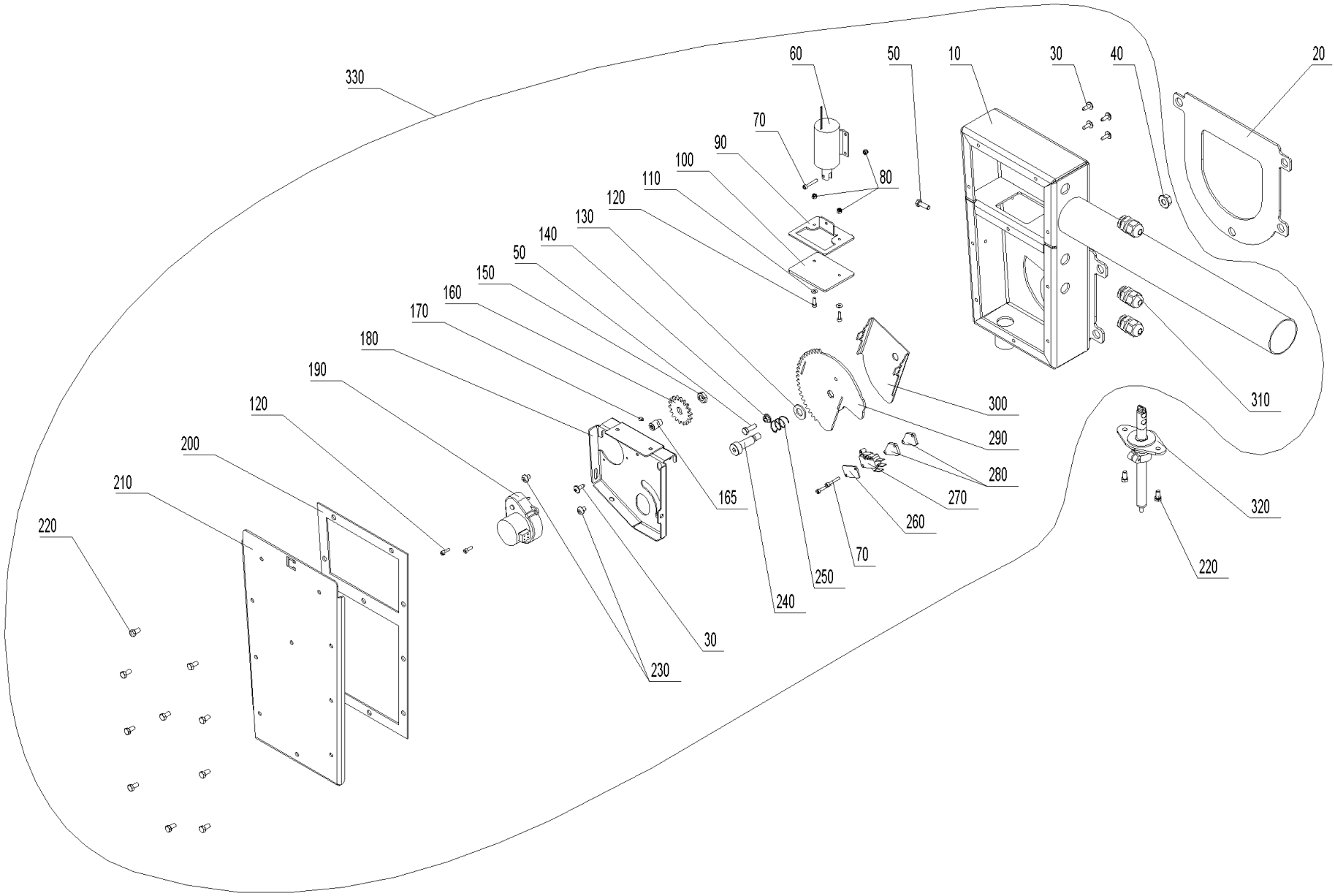

Luftregelung PL (A000159)

Pos.	Artikelnr.	Bezeichnung	Menge	Einheit
10	055783	Luftschacht P kpl. geschw. RAL 7021 schw. be.	1.00	Stk
20	052890	Dichtung Flansch Luftschacht PW24-103	1.00	Stk
30	018139	Zyl.-Schraube 4,2x13 m. U-Scheibe	5.00	Stk
40	016553	Sperrzahnmutter M8 verzinkt	1.00	Stk
50	015025	Sechskantschraube DIN 933 - M5x16 - 8.8 - verzinkt	2.00	Stk
60	052911	Zylindermagnet PW24-60	1.00	Stk
70	016769	Zyl.-Schraube M3x20 verzinkt mit KS. DIN 7985 A Form H	3.00	Stk
80	016725	Sicherungsmutter DIN 985 - M 3 - 8 - verzinkt	3.00	Stk
90	052885	Absperrplatte PW24-103	1.00	Stk
100	052886	Dichtung Absperrplatte PW24-103	1.00	Stk
110	021474	U-Scheibe DIN 134 - M3 - verzinkt	2.00	Stk
120	052828	Zylinderschraube m. Innensechskant ISO 4762 - M 3 x 10 - 8.8 - verzinkt (DIN 912)	4.00	Stk
130	018058	U-Scheibe DIN 125 - M10	1.00	Stk
140	016565	Sperrzahnmutter M5 verzinkt	1.00	Stk
150	016659	Mutter DIN439 - M 8	1.00	Stk
160	055776	Stirnrad M2 Z18 TK36	1.00	Stk
165	056043	Stirnradbef. verz. schwarz chr.	1.00	Stk
170	054158	Gewindestifte mit ISK und Kegelkuppe ISO4026/DIN 913 M 5X 20 Edelstahl A2	1.00	Stk
180	055789	Konsole Stellmotor PL	1.00	Stk
190	095690	Luftklappen-Motor 1 U/min Crozet PuroWIN	1.00	Stk
200	055791	Di. De. Primärluftregelung	1.00	Stk
210	055792	De. Primärluftr. RAL7021 schw. be.	1.00	Stk

Luftregelung PL (A000159)

Pos.	Artikelnr.	Bezeichnung	Menge	Einheit
220	016756	SKT-Flanschschraube KL100 M5x10 vz. mit Sperr-Rippen unter dem Flansch, Gewinde bis Kopf, Oberflächengehärtet	12.00	Stk
230	016768	Linsenschraube mit Innensechskant, M3x5 verz.,	2.00	Stk
240	055777	Pass - Schulterschraube D10x25 ISO7379	1.00	Stk
250	053997	Druckfeder PW24-60	1.00	Stk
260	051044	Platte Mikroschalter PW24-60	1.00	Stk
270	009277	Mikroschalter mit Rollenhebel VAE, BW, BW2, LWP, LWK, LWPT, PW24-103	1.00	Stk
280	056070	Platte Mikroschalter 3mm	2.00	Stk
290	055787	Stirnrad PL	1.00	Stk
300	055784	Luftklappe PL	1.00	Stk
310	006340	Kabelverschraubung	3.00	Stk
320	052878	Strömungsmessumformer PW24-103	1.00	Stk
330	056250	Primärluftkasten kpl. PW24-103	1.00	Stk

Schaltfeld (A000160)

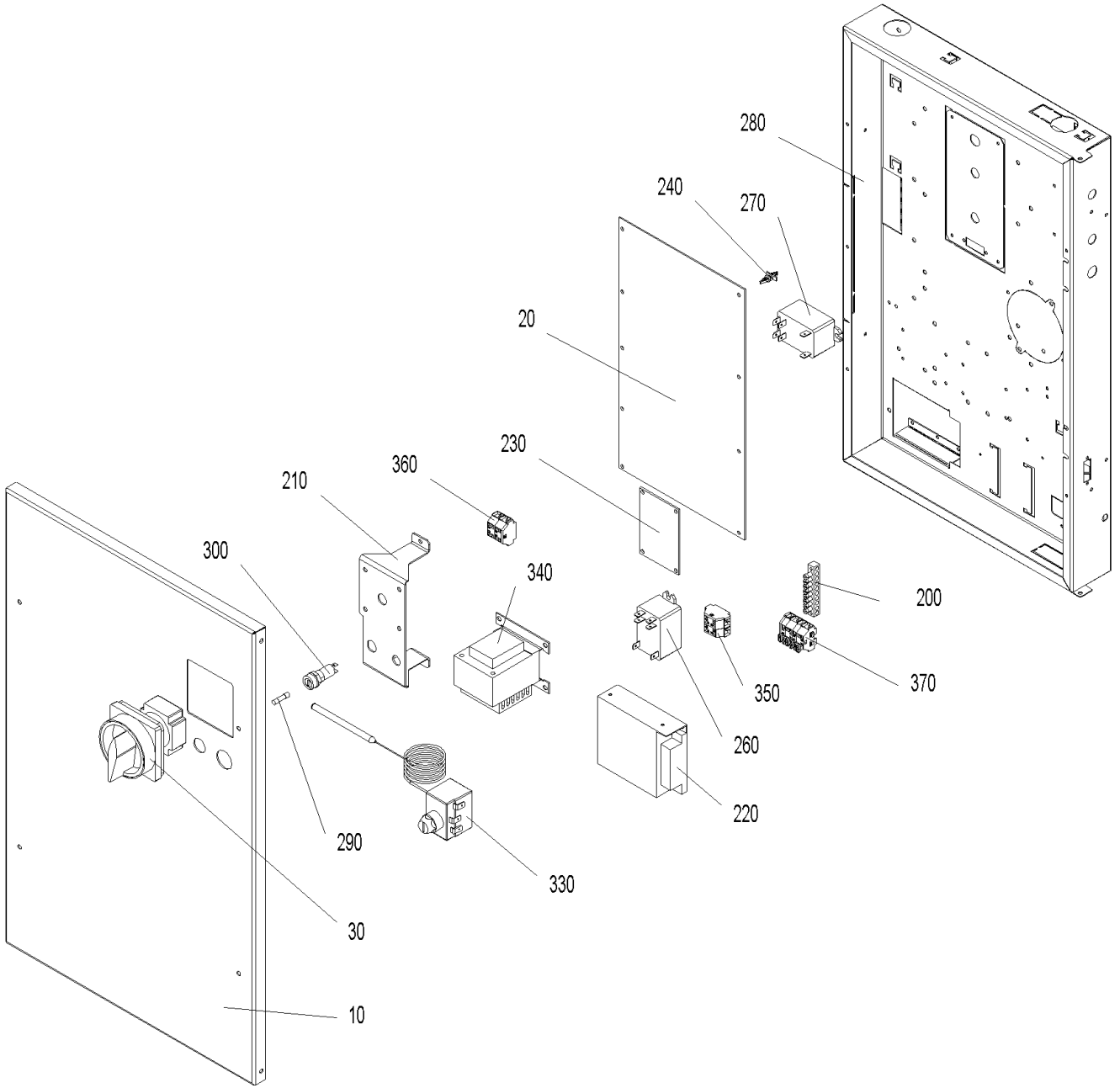

Schaltfeld (A000160)

Pos.	Artikelnr.	Bezeichnung	Menge	Einheit
10	053289	Deckel Schaltfeld PW24-103	1.00	Stk
20	012007	Feuerungsautomat PW24-103	1.00	Stk
30	012010	Hauptschalter 2polig 16 A PW24-103	1.00	Stk
40	013840	Kabel Nr.: 250 230V-Versorgung Fu`s + FA2 PW24-103	1.00	Stk
50	013841	Kabel Nr.: 251 Ascheaustragung PW24-103	1.00	Stk
60	013850	Kabel Nr.: 259 Position Ascheschieber + Schalter Überfüllung PW24-103	1.00	Stk
70	013851	Kabel Nr.: 260 Position Glutbettschieber + Level Controll PW24-103	1.00	Stk
80	013842	Kabel Nr.: 252 Heizflächenreinigung PW24-103	1.00	Stk
90	013843	Kabel Nr.: 253 LON Elektrikeranschluß PW24-103	1.00	Stk
100	013844	Kabel Nr.: 254 LON FA2 + STB PW24-103	1.00	Stk
110	013845	Kabel Nr.: 255 Motor Ascheschieber PW24-103	1.00	Stk
120	013847	Kabel Nr.: 256 Motor Glutbettschieber PW24-103	1.00	Stk
130	013848	Kabel Nr.: 257 ModBUS Steigschnecke PW24-103	1.00	Stk
140	013849	Kabel Nr.: 258 Netz + Heizungsnotschalter PW24-103	1.00	Stk
145	053326	Kabel Primärzündung PW24-103	1.00	Stk
150	013852	Kabel Nr.: 261 Saugzuggebläse PW24-103	1.00	Stk
160	013853	Kabel Nr.: 262 Sekundärluftklappe PW24-103	1.00	Stk
170	013855	Kabel Nr.: 263 Sekundärzündung PW24-103	1.00	Stk
180	013856	Kabel Nr.: 264 Türschalter kpl. PW24-103	1.00	Stk
190	013857	Kabel Nr.: 265 Versorgung ModBUS FU`s+FA2 PW24-103	1.00	Stk
200	009929	Klemmschiene MS 8x8mm 8pol.+Befestigungsbohrungen	1.00	Stk
210	053984	Konsole Hauptschalter PW24-60	1.00	Stk

Schaltfeld (A000160)

Pos.	Artikelnr.	Bezeichnung	Menge	Einheit
220	002054	Netzteil 12V, 4,2A Type LRS-50-12	1.00	Stk
230	012014	Platine - Relais PW24-103	1.00	Stk
240	007609	Platinenhalter CBS-4N spitz VAE, FW, BW10-26, BWXL, BW2, BW2T, LWPT, PW24-103, BWL	1.00	Stk
250	007620	Rauchgasfühler PT1000 (Länge 1100mm) BW2, BW2T, PW24-103, BWL, BW2P	1.00	Stk
260	005075	Relais 16A AC 2 polig 12V DC Steuerung	1.00	Stk
270	005025	Relais, Schließer 30A/250V AC , OMRON G7L-2A-BUB PMX, BW10-26, FW, VAE, BWXL, LWK, PW24-103	1.00	Stk
290	003228	Sicherung 6,3A	1.00	Stk
300	055193	ET-Set: Sicherungshalter f. Feinsicherung inkl. Umbauanleitung JW	1.00	Stk
310	502186	MES009M Tauchfühler ZTF 222 (Boiler-/Kessel-/Pufferfühler) für MES, Länge: 2,5m	1.00	Stk
320	007626	Thermoelement 2AB NM30/110 mm TI/DI 2AB25 2,5 (Brennkammer- bzw. Thermocontrollfühler)	1.00	Stk
330	005672	Sicherheitsthermostat VAE, LWK, BW2, BW2T, LWPT, PW24-103, BWL, BW2P Schaltpunkt:100 C +0/-6 Fühlerl.isol.; bei EW/JW ab 05/2017 (	1.00	Stk
340	007096	Trafo O2-Sonde 18VA LWP18-50, LWK, LWPT, PW24-103	1.00	Stk
350	006834	Wagoblock 261 4-polig "Sicherheit 1-4" (2xblau/2xgrau) VAE, FW, BW2, BW2T, LWPT, PW24-103, BWL	1.00	Stk
360	006833	Wagoblock 261 4-polig "12V GND" VAE, FW, BW2, BW2T, LWPT, PW24-103, BWL	1.00	Stk
370	007656	Wagoblock 261 XS 1-6 BW2, PW24-103	1.00	Stk
380	018140	Zylinder Schraube 4,2x13m unt.Scheibe DIN 7981 stumpf	1.00	Stk

Luftregelung SL/TL (A000231)

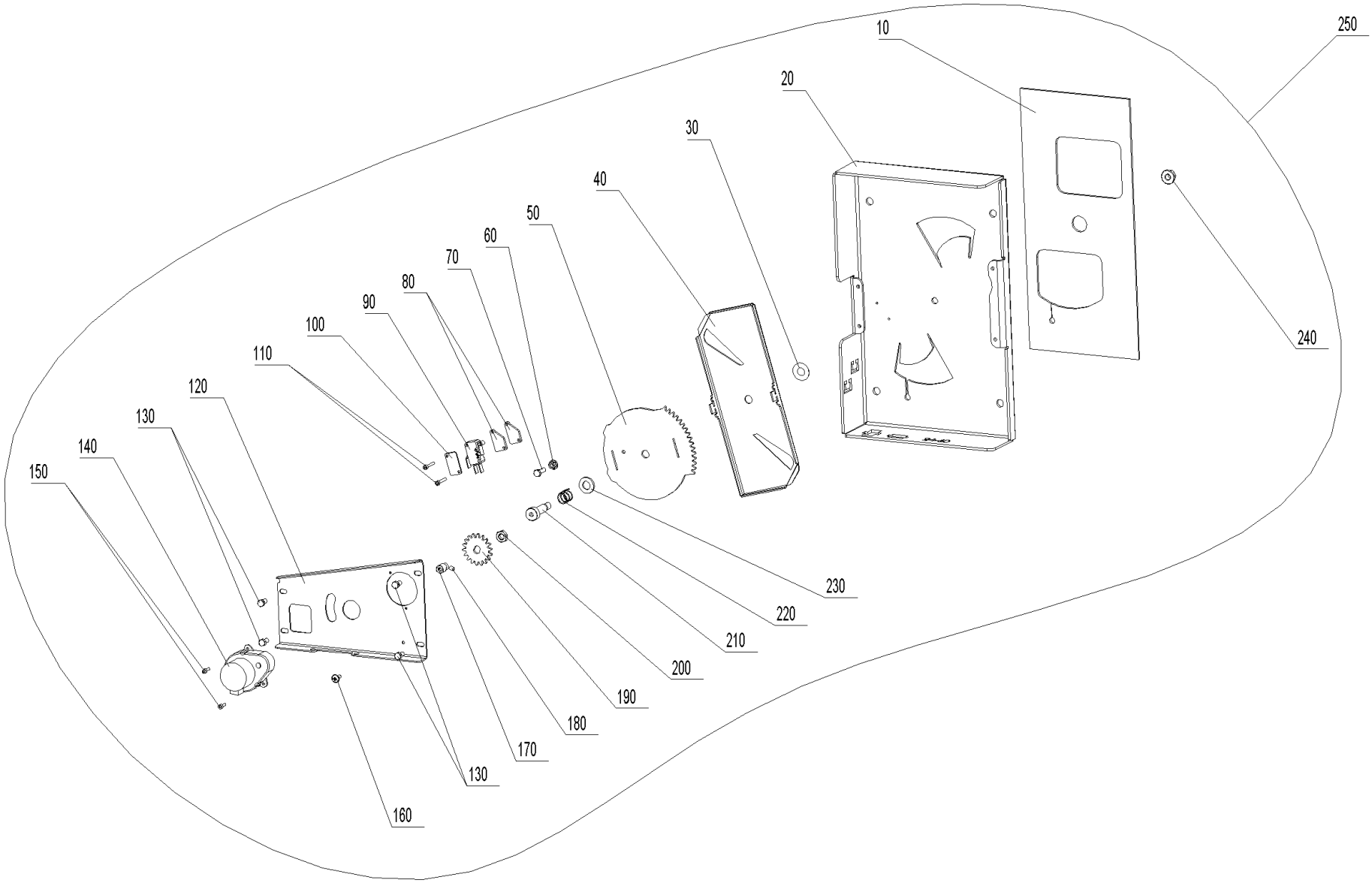

Luftregelung SL/TL (A000231)

Pos.	Artikelnr.	Bezeichnung	Menge	Einheit
10	055559	Dichtung Luftregelung S/T PW72-103	1.00	Stk
20	055772	Konsole Luftregelung S/T PW72-100	1.00	Stk
30	056042	Distanzscheibe 10x16x0,2 A2 DIN988	1.00	Stk
40	055773	Luftklappe S/T	1.00	Stk
50	055775	Stirnrad S/T	1.00	Stk
60	016565	Sperrzahnmutter M5 verzinkt	1.00	Stk
70	015025	Sechskantschraube DIN 933 - M5x16 - 8.8 - verzinkt	1.00	Stk
80	056070	Platte Mikroschalter 3mm	2.00	Stk
90	009277	Mikroschalter mit Rollenhebel VAE, BW, BW2, LWP, LWK, LWPT, PW24-103	1.00	Stk
100	051044	Platte Mikroschalter PW24-60	1.00	Stk
110	016769	Zyl.-Schraube M3x20 verzinkt mit KS. DIN 7985 A Form H	2.00	Stk
120	055779	Bef. Stellmotor S/T	1.00	Stk
130	016756	SKT-Flanschschraube KL100 M5x10 vz. mit Sperr-Rippen unter dem Flansch, Gewinde bis Kopf, Oberflächengehärtet	4.00	Stk
140	095690	Luftklappen-Motor 1 U/min Crozet PuroWIN	1.00	Stk
150	052828	Zylinderschraube m. Innensechskant ISO 4762 - M 3 x 10 - 8.8 - verzinkt (DIN 912)	2.00	Stk
160	018140	Zylinder Schraube 4,2x13m unt.Scheibe DIN 7981 stumpf	1.00	Stk
170	056043	Stirnradbef. verz. schwarz chr.	1.00	Stk
180	054158	Gewindestifte mit ISK und Kegelkuppe ISO4026/DIN 913 M 5X 20 Edelstahl A2	1.00	Stk
190	055776	Stirnrad M2 Z18 TK36	1.00	Stk
200	016659	Mutter DIN439 - M 8	1.00	Stk
210	055777	Pass - Schulterschraube D10x25 ISO7379	1.00	Stk
220	053997	Druckfeder PW24-60	1.00	Stk

Luftregelung SL/TL (A000231)

Pos.	Artikelnr.	Bezeichnung	Menge	Einheit
230	018058	U-Scheibe DIN 125 - M10	1.00	Stk
240	016553	Sperrzahnmutter M8 verzinkt	1.00	Stk
250	055780	Luftregelung - Sekundär PW72-103	1.00	Stk

Heizflächenreinigung (A000232)

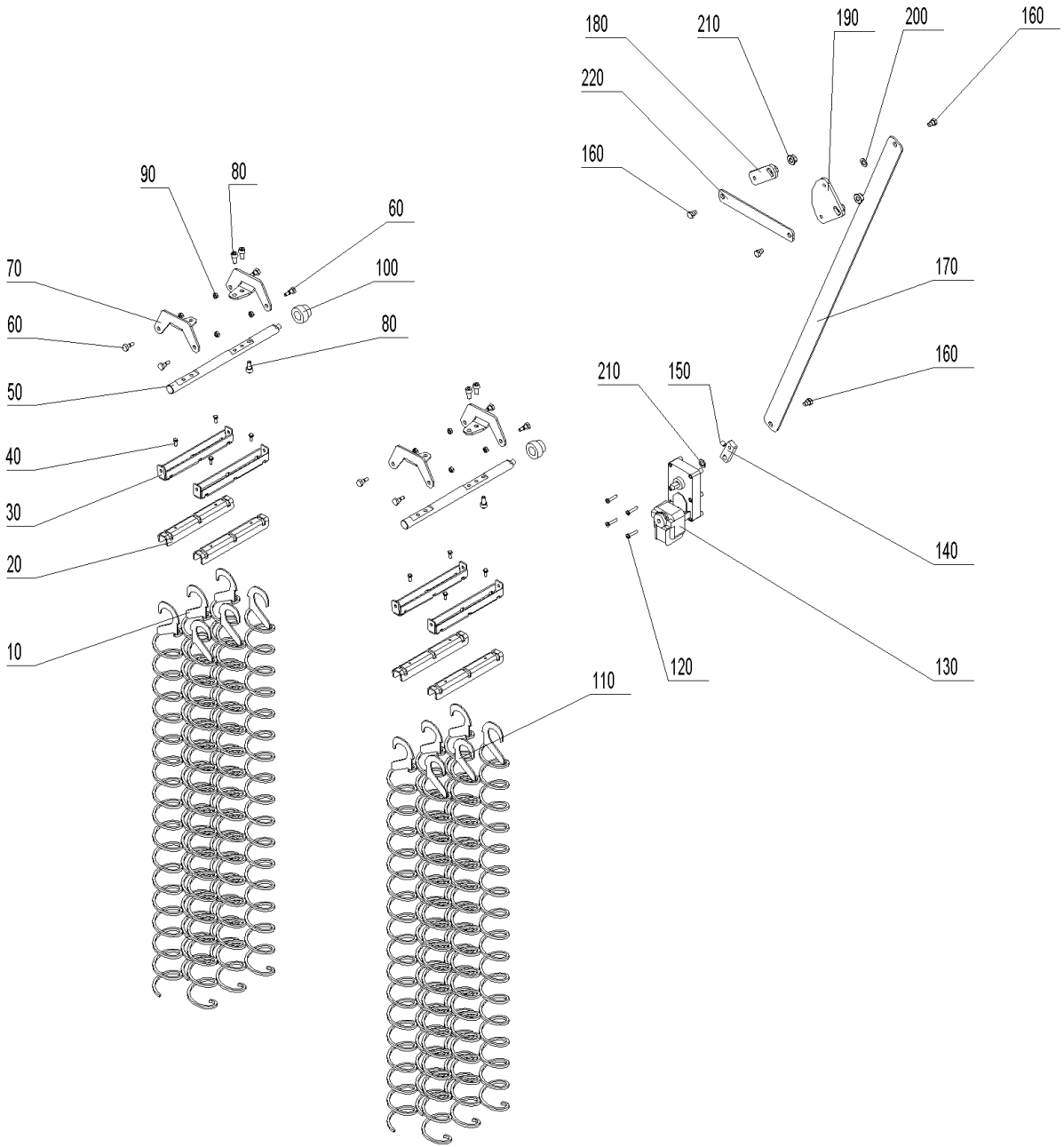

Heizflächenreinigung (A000232)

Pos.	Artikelnr.	Bezeichnung	Menge	Einheit
10	055556	Reinigungsschnecke links PW40-60 (Fallzug), PW72-103 (10x3 - Steig- u. Fallzug)	18.00	Stk
20	047065	Reinigungsprofil unten	6.00	Stk
30	047064	Reinigungsprofil oben	6.00	Stk
40	017020	Sechskantschraube DIN 933 - M5x12 - A2	12.00	Stk
50	053689	Welle für Heizflächenreinigung PW72-103	3.00	Stk
60	006756	Schraube Heizflächenreinigung M6	12.00	Stk
70	052738	Lagerarm für Heizflächenreinigung PW24-103	6.00	Stk
80	053102	Zylinderschraube m. Innensechskant ISO 4762 - M 8 x 16 - A4 (DIN 912)	15.00	Stk
90	016596	Mutter DIN 934 - M6 - A2	12.00	Stk
100	047416	Lager Heizflächenreinigung BWXL 35-60, PW24-103	3.00	Stk
120	016837	Zylinderschraube DIN 7985 M5x25 verz.m.KS	4.00	Stk
130	044665	Motor Ascheaustragung/ Heizflächenreinigung PMX15, BWE10-60, BW2, BW2T, PW, BWL, BW2P	1.00	Stk
140	053282	Rüttelhebel Motor HFR PW24-103	1.00	Stk
150	033112	Gewindestift DIN916 - M8x10-45H (mit Ringschneide)	1.00	Stk
160	012502	Ansatzschraube M8 x 6.5 verzinkt Ansatz D10 SW13	5.00	Stk
170	053284	Verbindung Heizflächenreinigung PW24-103	1.00	Stk
180	053281	Achsenhebel links HFR PW24-103	2.00	Stk
190	053280	Achsenhebel rechts HFR PW24-103	1.00	Stk
200	018031	Scheibe ISO 7092 - 10 - blank	1.00	Stk
210	016567	Sperrzahnmutter M10 verzinkt	3.00	Stk
220	053691	Verbinder Rüttelachse HFR PW72-103	1.00	Stk

Agitator (A000171)

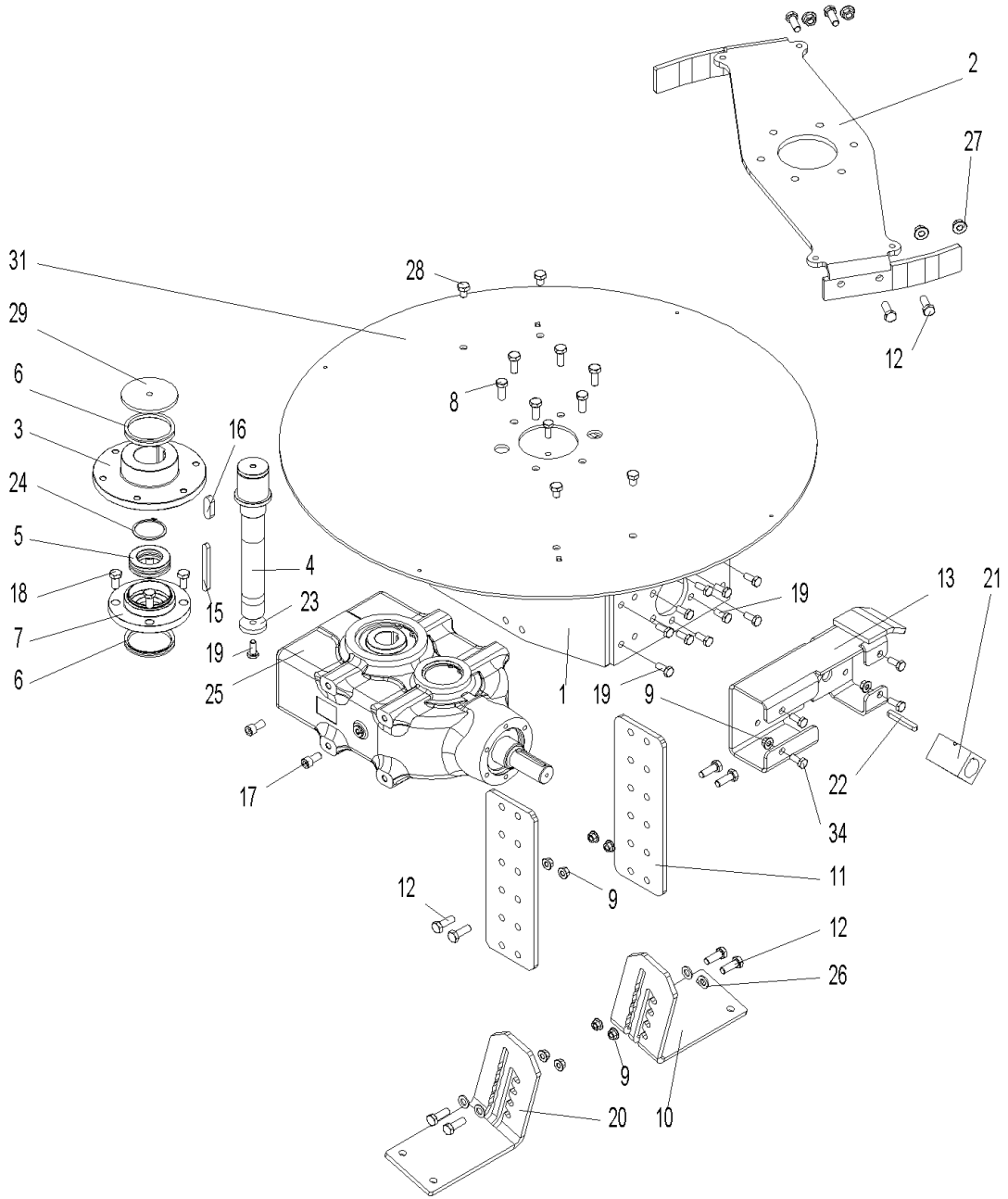

Agitator (A000171)

Item no.	Article no.	Description	Quantity	Unit
17	020117	Cylinder-head screw, hexagon socket ISO 4762 - M12x25 - 8.8 - galva. (DIN 912) for VarioWIN, FireWIN, BioWIN10-26, LogWIN Premium	4.00	pcs
13	053403	de: Aufnahme Trog ge. PW	1.00	pcs
5	053075	de: Axial Rillenkugellager Ø73 x Ø45 x 20	1.00	pcs
2	053079	de: Blattfederhalter Rührwerk PW	1.00	pcs
1	053071	de: Gehäuse Rührwerk PW	1.00	pcs
29	054282	de: Halter V-Ring Rührwerk oben PW	1.00	pcs
21	053750	de: Kupplung Getriebe PW	1.00	pcs
3	053401	de: Lagerflansch oben Rührwerk PW	1.00	pcs
7	053077	de: Lagerflansch unten Rührwerk PW	1.00	pcs
22	052628	de: Passfeder A10x8x70, DIN 6885 A	1.00	pcs
15	053406	de: Passfeder A12x8x100, DIN 6885 A	1.00	pcs
16	053407	de: Passfeder A16x10x45, DIN 6885 A	1.00	pcs
25	052846	de: Rührwerksgetriebe 1:16 PW	1.00	pcs
31	054508	de: Scheibe Blattfeder ge. PW	1.00	pcs
19	033538	de: Sechskantschraube DIN 933 - M10x25- 8.8-verzinkt - beschichtet mit Gleitlack bc2571 (bis 600°C)	12.00	pcs
28	054503	de: Sechskantschraube DIN 933 - M12x16 - 8.8 - verzinkt	4.00	pcs
8	017841	de: Sechskantschraube DIN 933 - M12x30 - 8.8	6.00	pcs
12	017867	de: Sechskantschraube DIN 933 - M12x35 - 8.8 - verzinkt	12.00	pcs
24	053873	de: Sicherungsring DIN 471 - 55 X 2	1.00	pcs
27	016569	de: Sperrzahnmutter M12 verzinkt (ähnlich DIN6923 8)	4.00	pcs
9	016569	de: Sperrzahnmutter M12 verzinkt (ähnlich DIN6923 8)	12.00	pcs

Agitator (A000171)

Item no.	Article no.	Description	Quantity	Unit
23	054524	de: U-Scheibe 10x48x8	1.00	pcs
6	053081	de: V-Ring Type A 73-79 NBR, PW	2.00	pcs
11	053404	de: Verlängerung Fuß Rührwerk PW	2.00	pcs
4	053402	de: Welle Getriebe PW	1.00	pcs
10	052030	de: Winkel Ständer Rührwerk links PW	1.00	pcs
20	053429	de: Winkel Ständer Rührwerk rechts PW	1.00	pcs
18	017205	Hexagon screws M12x25-8.8	4.00	pcs
26	017183	U-Washer DIN 125B - M12 - galvanised for VarioWIN, FireWIN, BioWIN XL 35-60	4.00	pcs

Control thermostat (A000178)

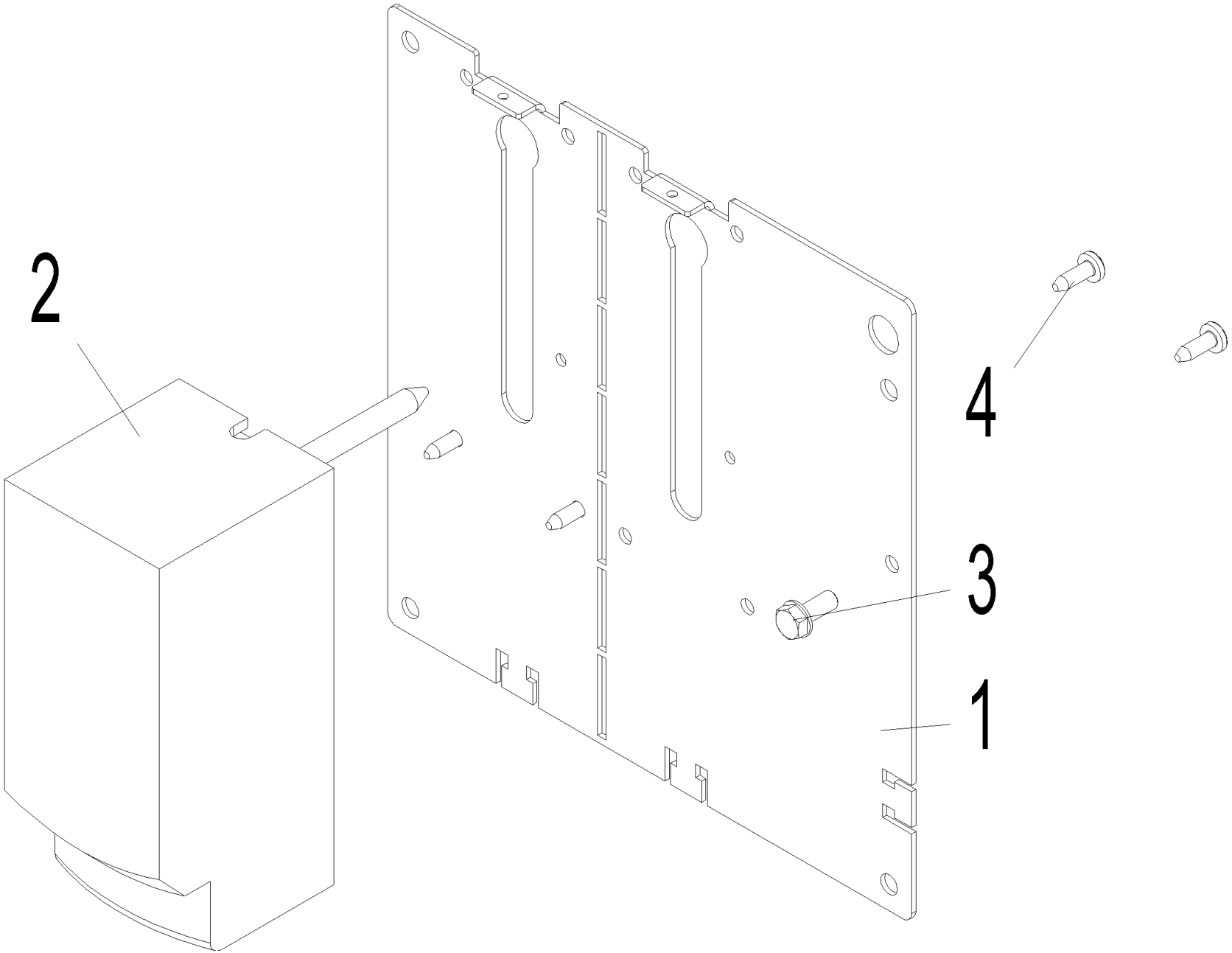

Control thermostat (A000178)

Item no.	Article no.	Description	Quantity	Unit
2	001605	de: AK-075 Regel-Thermostat für Boiler oder Pufferspeicher RAK TW 1000S-H (700mm Kapillarrohr, ohne Schutzrohr) für AK161R bis AK501R	2.00	pcs
1	054273	de: Befestigungsplatte STB RAK, PW	1.00	pcs
4	032271	de: Zyl.Bl.Schr.4,2x13NORM.Ausführ. DIN 7981 verz.	4.00	pcs
3	031545	Hexagon screw M5x12 DIN 7500 (not ilustrated)	1.00	pcs

Conveyor duct (A000170)

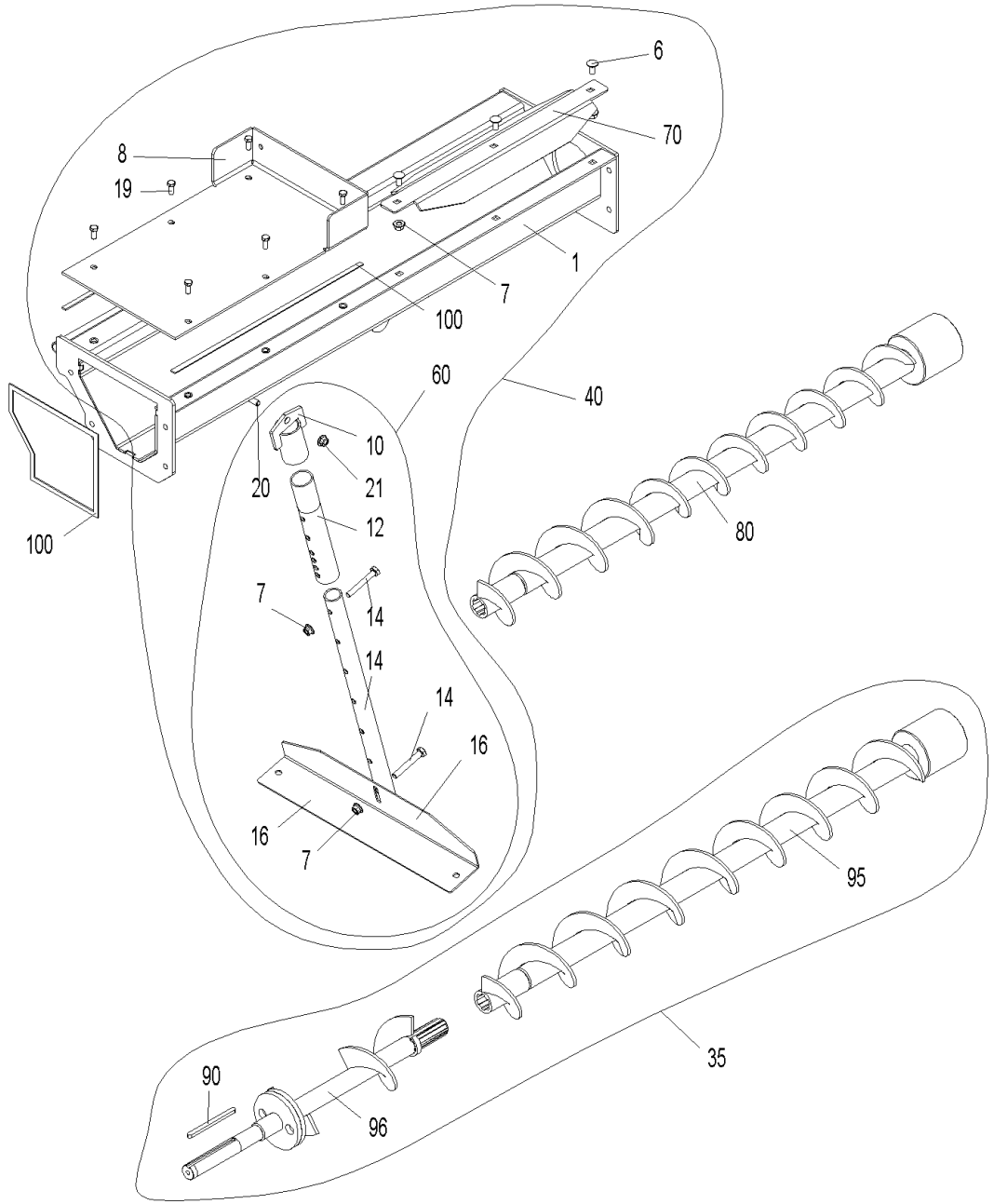

Conveyor duct (A000170)

Item no.	Article no.	Description	Quantity	Unit
8	051998	de: Abdeckung Austragung	1.00	pcs
1	052519	de: Austragschacht ge. 904 für RW1500	1.00	pcs
1	052520	de: Austragschacht ge. L=1154 für RW2000	1.00	pcs
1	052521	de: Austragschacht ge. L=1404 für RW2500	1.00	pcs
1	052524	de: Austragschacht ge. L=1654 für RW3000	1.00	pcs
1	052526	de: Austragschacht ge. L=1904 für RW3500	1.00	pcs
1	052527	de: Austragschacht ge. L=2154 für RW4000	1.00	pcs
1	052528	de: Austragschacht ge. L=2404 für RW4500	1.00	pcs
1	052529	de: Austragschacht ge. L=2654 für RW5000	1.00	pcs
100	054793	de: Dichtungsband 10x2 Ersatzteil 2,25 Meter	1.00	pcs
70	052542	de: Einlaufblech A, L=0305 für RW1500	1.00	pcs
70	052543	de: Einlaufblech A, L=0555 für RW2000	1.00	pcs
70	052544	de: Einlaufblech A, L=0809 für RW2500	1.00	pcs
70	052545	de: Einlaufblech A, L=1055 für RW3000	1.00	pcs
70	052546	de: Einlaufblech A, L=1305 für RW3500	1.00	pcs
70	052547	de: Einlaufblech A, L=1555 für RW4000	1.00	pcs
70	052549	de: Einlaufblech A, L=1805 für RW4500	1.00	pcs
70	052550	de: Einlaufblech A, L=2255 für RW5000	1.00	pcs
10	052032	de: Einstellgewindehülse Stütze	1.00	pcs
6	052027	de: Flachrundschraube mit Vierkantansatz DIN 603 M10x20	3.00	pcs
3	051995	de: Flanschplatte Austragung hinten	1.00	pcs
2	051989	de: Flanschplatte Schacht Schnecke	1.00	pcs

Conveyor duct (A000170)

Item no.	Article no.	Description	Quantity	Unit
4	052035	de: Halter Stütze RW	1.00	pcs
13	052039	de: Lamellenstopfen GPN 320 GL30 1-2	1.00	pcs
96	054530	de: P2W6 Schnecke PS ge. pneumatisch	1.00	pcs
95	054535	de: P2W30 Austragschnecke zu Austragung- Zuführung pneumatisch mit Rührwerk Ø1500mm	1.00	pcs
95	054536	de: P2W31 Austragschnecke zu Austragung- Zuführung pneumatisch mit Rührwerk Ø2000mm	1.00	pcs
95	054537	de: P2W32 Austragschnecke zu Austragung- Zuführung pneumatisch mit Rührwerk Ø2500mm	1.00	pcs
95	054538	de: P2W33 Austragschnecke zu Austragung- Zuführung pneumatisch mit Rührwerk Ø3000mm	1.00	pcs
95	054539	de: P2W34 Austragschnecke zu Austragung- Zuführung pneumatisch mit Rührwerk Ø3500mm	1.00	pcs
95	054540	de: P2W35 Austragschnecke zu Austragung- Zuführung pneumatisch mit Rührwerk Ø4000mm	1.00	pcs
95	054541	de: P2W36 Austragschnecke zu Austragung- Zuführung pneumatisch mit Rührwerk Ø4500mm	1.00	pcs
95	054543	de: P2W37 Austragschnecke zu Austragung- Zuführung pneumatisch mit Rührwerk Ø5000mm	1.00	pcs
90	052627	de: Passfeder A8x7x120, DIN 6885 A PW	1.00	pcs
35	054770	de: PW03 Austragschnecke zu Austragung- Zuführung pneumatisch mit Rührwerk Ø1500mm	1.00	pcs
40	052532	de: PW10 Austragungsschacht montiert zu Austragung-Zuführung direkt / pneumatisch mit Rührwerk Ø1500mm	1.00	pcs
40	052533	de: PW11 Austragungsschacht montiert zu Austragung-Zuführung direkt / pneumatisch mit Rührwerk Ø2000mm	1.00	pcs
40	052534	de: PW12 Austragungsschacht montiert zu Austragung-Zuführung direkt / pneumatisch mit Rührwerk Ø2500mm	1.00	pcs

Conveyor duct (A000170)

Item no.	Article no.	Description	Quantity	Unit
40	052535	de: PW13 Austragungsschacht montiert zu Austragung-Zuführung direkt / pneumatisch mit Rührwerk Ø3000mm	1.00	pcs
40	052536	de: PW14 Austragungsschacht montiert zu Austragung-Zuführung direkt / pneumatisch mit Rührwerk Ø3500mm	1.00	pcs
40	052537	de: PW15 Austragungsschacht montiert zu Austragung-Zuführung direkt / pneumatisch mit Rührwerk Ø4000mm	1.00	pcs
40	052538	de: PW16 Austragungsschacht montiert zu Austragung-Zuführung direkt / pneumatisch mit Rührwerk Ø4500mm	1.00	pcs
40	052539	de: PW17 Austragungsschacht montiert zu Austragung-Zuführung direkt / pneumatisch mit Rührwerk Ø5000mm	1.00	pcs
80	052618	de: PW20 Austragschnecke zu Austragung- Zuführung direkt mit Rührwerk Ø1500mm	1.00	pcs
80	052619	de: PW21 Austragschnecke zu Austragung- Zuführung direkt mit Rührwerk Ø2000mm	1.00	pcs
80	052620	de: PW22 Austragschnecke zu Austragung- Zuführung direkt mit Rührwerk Ø2500mm	1.00	pcs
80	052622	de: PW23 Austragschnecke zu Austragung- Zuführung direkt mit Rührwerk Ø3000mm	1.00	pcs
80	052624	de: PW25 Austragschnecke zu Austragung- Zuführung direkt mit Rührwerk Ø4000mm	1.00	pcs
80	052625	de: PW26 Austragschnecke zu Austragung- Zuführung direkt mit Rührwerk Ø4500mm	1.00	pcs
80	052626	de: PW27 Austragschnecke zu Austragung- Zuführung direkt mit Rührwerk Ø5000mm	1.00	pcs
35	054772	de: PW31 Austragschnecke zu Austragung- Zuführung pneumatisch mit Rührwerk Ø2000mm	1.00	pcs
35	054773	de: PW32 Austragschnecke zu Austragung- Zuführung pneumatisch mit Rührwerk Ø2500mm	1.00	pcs
35	054774	de: PW33 Austragschnecke zu Austragung- Zuführung pneumatisch mit Rührwerk Ø3000mm	1.00	pcs
35	054775	de: PW34 Austragschnecke zu Austragung- Zuführung pneumatisch mit Rührwerk Ø3500mm	1.00	pcs
35	054777	de: PW35 Austragschnecke zu Austragung- Zuführung pneumatisch mit Rührwerk Ø4000mm	1.00	pcs
35	054778	de: PW36 Austragschnecke zu Austragung- Zuführung pneumatisch mit Rührwerk Ø4500mm	1.00	pcs
35	054779	de: PW37 Austragschnecke zu Austragung- Zuführung pneumatisch mit Rührwerk Ø5000mm	1.00	pcs

Conveyor duct (A000170)

Item no.	Article no.	Description	Quantity	Unit
80	052623	de: PW89 Austragschnecke zu Austragung- Zuführung direkt mit Rührwerk Ø3500mm	1.00	pcs
5	052026	de: Rohr Fühler Lager	1.00	pcs
14	031607	de: Sechskantschraube DIN 933 - M10x70 - 8.8 - verzinkt	3.00	pcs
20	017867	de: Sechskantschraube DIN 933 - M12x35 - 8.8 - verzinkt	1.00	pcs
21	016569	de: Sperrzahnmutter M12 verzinkt (ähnlich DIN6923 8)	1.00	pcs
12	052037	de: Stütze oben	1.00	pcs
60	052038	de: Stütze Rührwerk kpl. PuroWIN	1.00	pcs
9	052036	de: Stütze unten	1.00	pcs
16	053431	de: Winkel Ständer Schacht	2.00	pcs
7	016567	Hexagon nut M10 with flange and gearing (not illustrated)	5.00	pcs
19	017086	Hexagon screw M8x20 DIN 933 (not illustrated)	6.00	pcs
17	016156	Rivet nut M8 for VarioWIN, FireWIN, BioWIN XL 35-60	6.00	pcs

Extensions (A000169)

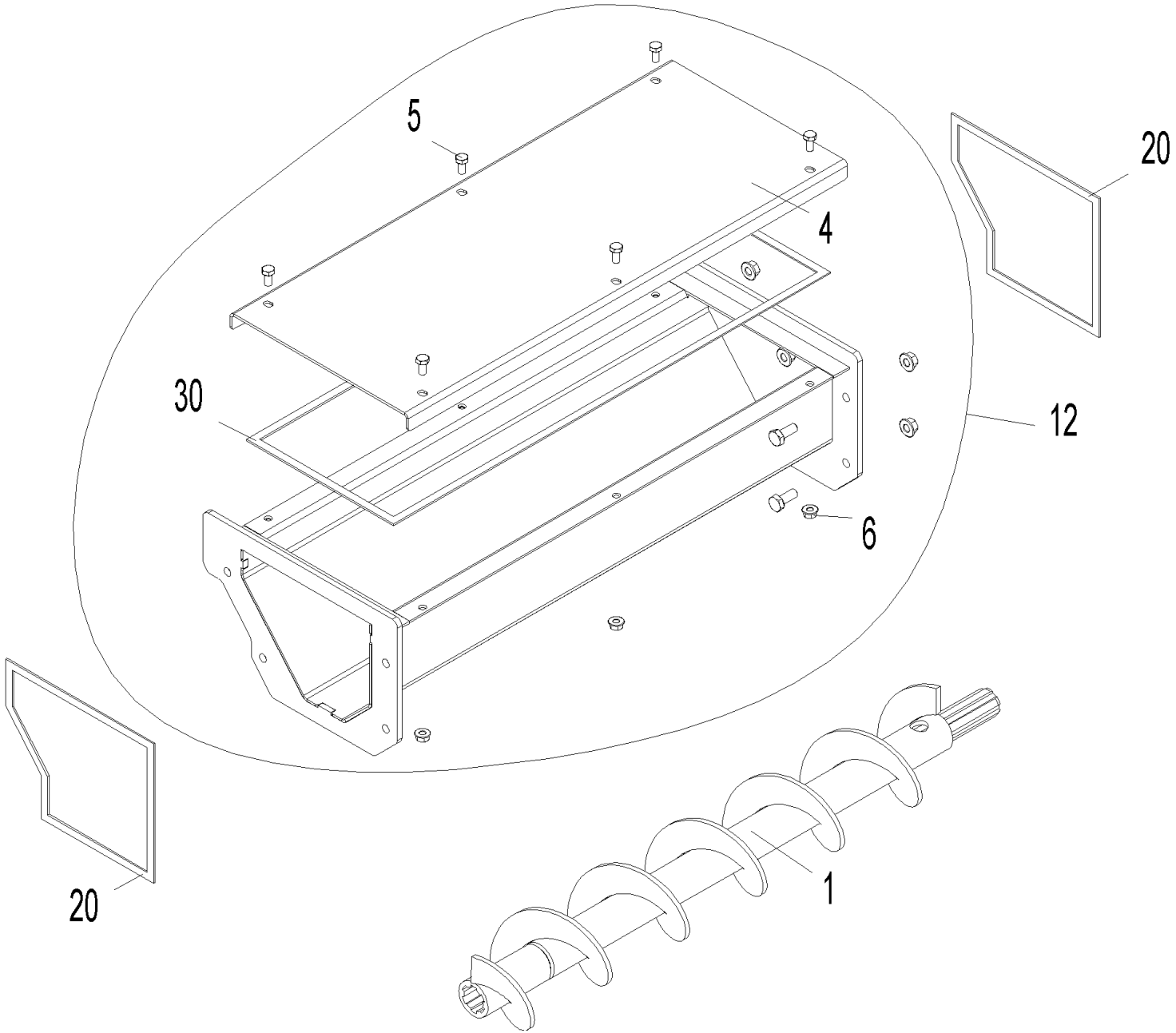

Extensions (A000169)

Item no.	Article no.	Description	Quantity	Unit
4	052426	de: Abdeckung Verängerung L=1520	1.00	pcs
4	052416	de: Abdeckung Verlängerung L=0200	1.00	pcs
4	052417	de: Abdeckung Verlängerung L=0320	1.00	pcs
4	052418	de: Abdeckung Verlängerung L=0440	1.00	pcs
4	052419	de: Abdeckung Verlängerung L=0560	1.00	pcs
4	052420	de: Abdeckung Verlängerung L=0680	1.00	pcs
4	052421	de: Abdeckung Verlängerung L=0800	1.00	pcs
4	052422	de: Abdeckung Verlängerung L=0920	1.00	pcs
4	052424	de: Abdeckung Verlängerung L=1160	1.00	pcs
4	052427	de: Abdeckung Verlängerung L=1640	1.00	pcs
4	052428	de: Abdeckung Verlängerung L=1760	1.00	pcs
4	052429	de: Abdeckung Verlängerung L=2000	1.00	pcs
4	052425	de: Abdeckung Verlängrung L=1400	1.00	pcs
20	054793	de: Dichtungsband 10x2 Ersatzteil 2,25 Meter	1.00	pcs
30	054794	de: Dichtungsband 10x2 Ersatzteil 4,5 Meter	1.00	pcs
12	052456	de: PW06 Verlängerung Länge 1560 mm zu Zuführung direkt	1.00	pcs
12	052447	de: PW51 Verlängerung Länge 240 mm zu Zuführung direkt	1.00	pcs
12	052448	de: PW52 Verlängerung Länge 360 mm zu Zuführung direkt	1.00	pcs
12	052449	de: PW53 Verlängerung Länge 480 mm zu Zuführung direkt	1.00	pcs
12	052450	de: PW54 Verlängerung Länge 600 mm zu Zuführung direkt / pneumatisch	1.00	pcs
12	052451	de: PW55 Verlängerung Länge 720 mm zu Zuführung direkt	1.00	pcs
12	052452	de: PW56 Verlängerung Länge 840 mm zu Zuführung direkt	1.00	pcs

Extensions (A000169)

Item no.	Article no.	Description	Quantity	Unit
12	052453	de: PW57 Verlängerung Länge 960 mm zu Zuführung direkt	1.00	pcs
12	052454	de: PW58 Verlängerung Länge 1200 mm zu Zuführung direkt	1.00	pcs
12	052455	de: PW59 Verlängerung Länge 1440 mm zu Zuführung direkt	1.00	pcs
12	052458	de: PW61 Verlängerung Länge 1680 mm zu Zuführung direkt / pneumatisch	1.00	pcs
12	052459	de: PW62 Verlängerung Länge 1800 mm zu Zuführung direkt	1.00	pcs
12	052508	de: PW63 Verlängerung Länge 2040 mm zu Zuführung direkt	1.00	pcs
1	052586	de: PW66 Schnecke L=240mm für Verlängerung Zuführung direkt,	1.00	pcs
1	052587	de: PW67 Schnecke L=360mm für Verlängerung Zuführung direkt,	1.00	pcs
1	052588	de: PW68 Schnecke L=480mm für Verlängerung Zuführung direkt,	1.00	pcs
1	052589	de: PW69 Schnecke L=600mm für Verlängerung Zuführung direkt,	1.00	pcs
1	052590	de: PW70 Schnecke L=720mm für Verlängerung Zuführung direkt,	1.00	pcs
1	052591	de: PW71 Schnecke L=840mm für Verlängerung Zuführung direkt,	1.00	pcs
1	052592	de: PW72 Schnecke L=960mm für Verlängerung Zuführung direkt,	1.00	pcs
1	052593	de: PW73 Schnecke L=1200mm für Verlängerung Zuführung direkt,	1.00	pcs
1	052594	de: PW74 Schnecke L=1440mm für Verlängerung Zuführung direkt,	1.00	pcs
1	052595	de: PW75 Schnecke L=1560mm für Verlängerung Zuführung direkt,	1.00	pcs
1	052596	de: PW76 Schnecke L=1680mm für Verlängerung Zuführung direkt,	1.00	pcs
1	052597	de: PW77 Schnecke L=1800mm für Verlängerung Zuführung direkt,	1.00	pcs
1	052599	de: PW78 Schnecke L=2040mm für Verlängerung Zuführung direkt,	1.00	pcs
6	016553	Hexagon nut M8 with flange and gearing	6.00	pcs
5	015134	Hexagon screw M8x16 DIN 933	6.00	pcs

Handover block direct (A000167)

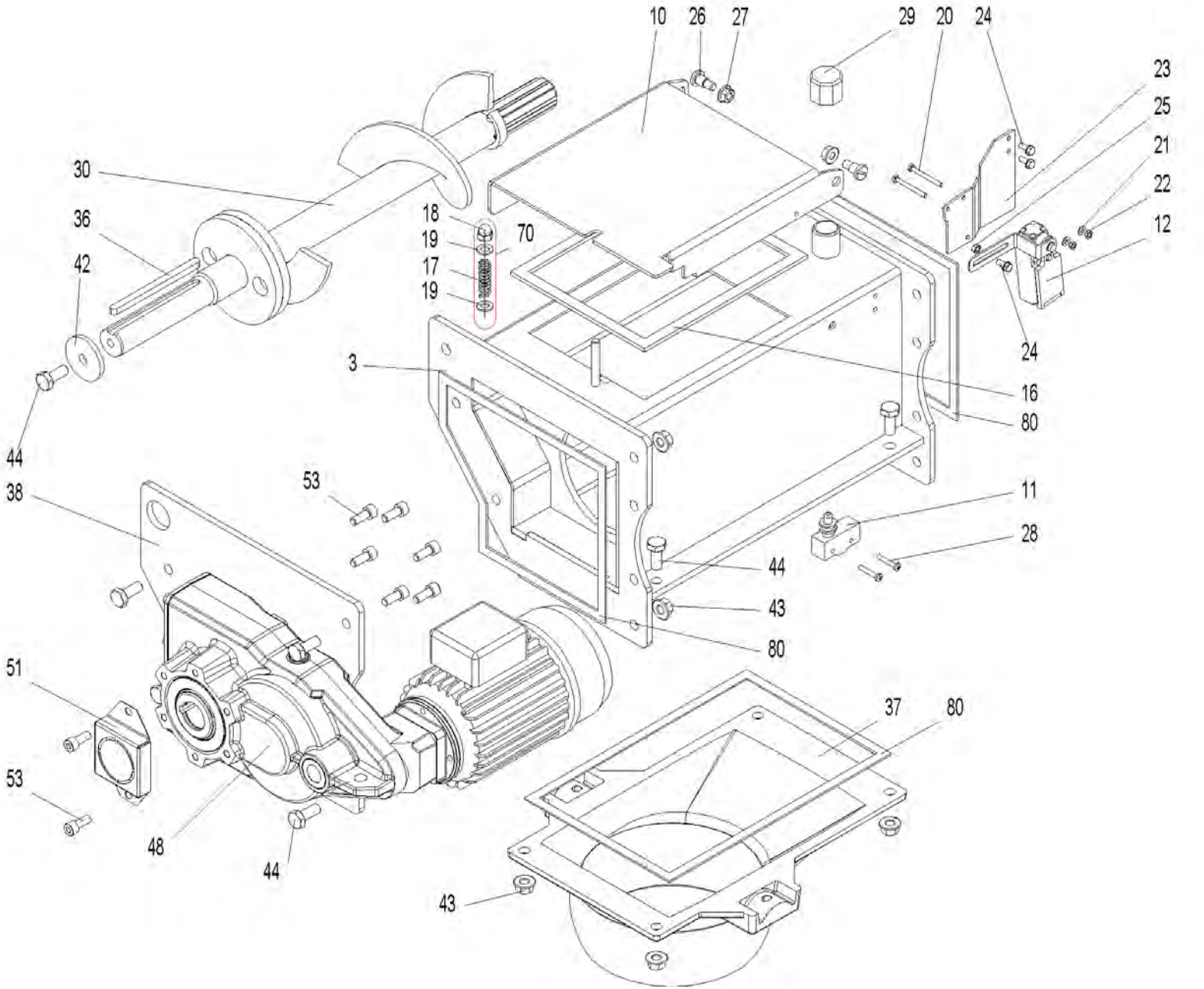

Handover block direct (A000167)

Item no.	Article no.	Description	Quantity	Unit
29	006165	Cap Nr. 301, 3/4" black	1.00	pcs
18	025968	Cap nut M6	1.00	pcs
51	053432	de: Berührungsschutz Motorwelle PW	3.00	pcs
10	051968	de: Deckel ES PW	1.00	pcs
16	054528	de: Dichtung Deckel Übergabe PW	1.00	pcs
80	054794	de: Dichtungsband 10x2 Ersatzteil 4,5 Meter	1.00	pcs
70	054499	de: Druckfeder kpl. Übergabeeinheit EX u. PX, PW	1.00	pcs
17	052351	de: Druckfeder Ø10x 40x Ø1,5 PW	1.00	pcs
26	051975	de: Flachkopfschraube mit Schlitz und Ansatz M8x10, chromatiert	2.00	pcs
3	051963	de: Flanschplatte 01 ES PW	2.00	pcs
37	051455	de: Flansch Schnecke oben PW	1.00	pcs
84	054405	de: Kabel Microschalter Schacht PuroWIN	1.00	pcs
86	053370	de: Kabel Nr. 165 Microschalter Schacht PuroWIN	1.00	pcs
85	053370	de: Kabel Nr. 165 Microschalter Schacht PuroWIN	1.00	pcs
82	054406	de: Kabel Schutztürschalter Schacht PuroWIN-Erweiterung	1.00	pcs
87	053369	de: Kabel Schutztürschalter Schacht PW	1.00	pcs
83	053369	de: Kabel Schutztürschalter Schacht PW	1.00	pcs
38	052346	de: Motorflansch RW Typ A PW	2.00	pcs
48	054759	de: Motor Rührwerk mit Flansch RAS PW DIREKT	1.00	pcs
22	016578	de: Mutter DIN 934 - M4 - 8 - verzinkt	3.00	pcs
36	052627	de: Passfeder A8x7x120, DIN 6885 A PW	1.00	pcs
21	031712	de: Scheibe ISO 7089 - 4 - A2	2.00	pcs

Handover block direct (A000167)

Item no.	Article no.	Description	Quantity	Unit
19	031713	de: Scheibe ISO 7089 - 6 - A2	2.00	pcs
30	051981	de: Schnecke ES kpl. mont. PW	1.00	pcs
12	052024	de: Schutztürschalter D4NH-1 Omron PW	1.00	pcs
44	054526	de: Sechskantschraube DIN 933 - M10x25 - 8.8 - verzinkt	9.00	pcs
81	054264	de: STW 88°C mit Kabel PW	1.00	pcs
42	051940	de: U-Scheibe 10x48x5 PW	3.00	pcs
23	052025	de: Unterlage Schalter PW	1.00	pcs
28	016802	de: Zyl.-Schrauben M4x25 verz.m.KS DIN 7985	2.00	pcs
53	053834	de: Zylinderschraube m. Innensechskant M8 x 20 - A4	10.00	pcs
25	016586	Hexagon nut M5 DIN 934	1.00	pcs
27	016553	Hexagon nut M8 with flange and gearing	2.00	pcs
43	016567	Hexagon nut M10 with flange and gearing (not illustrated)	8.00	pcs
20	016752	Hexagon screw DIN 933 - M4x40 - 8.8 - galvanised for VarioWIN	2.00	pcs
24	031545	Hexagon screw M5x12 DIN 7500 (not ilustrated)	3.00	pcs
11	007128	Microswitch Z-15GQ-B for LogWIN Premium 180-505, BioWIN XL 35-60	1.00	pcs

Leaf spring (A000183)

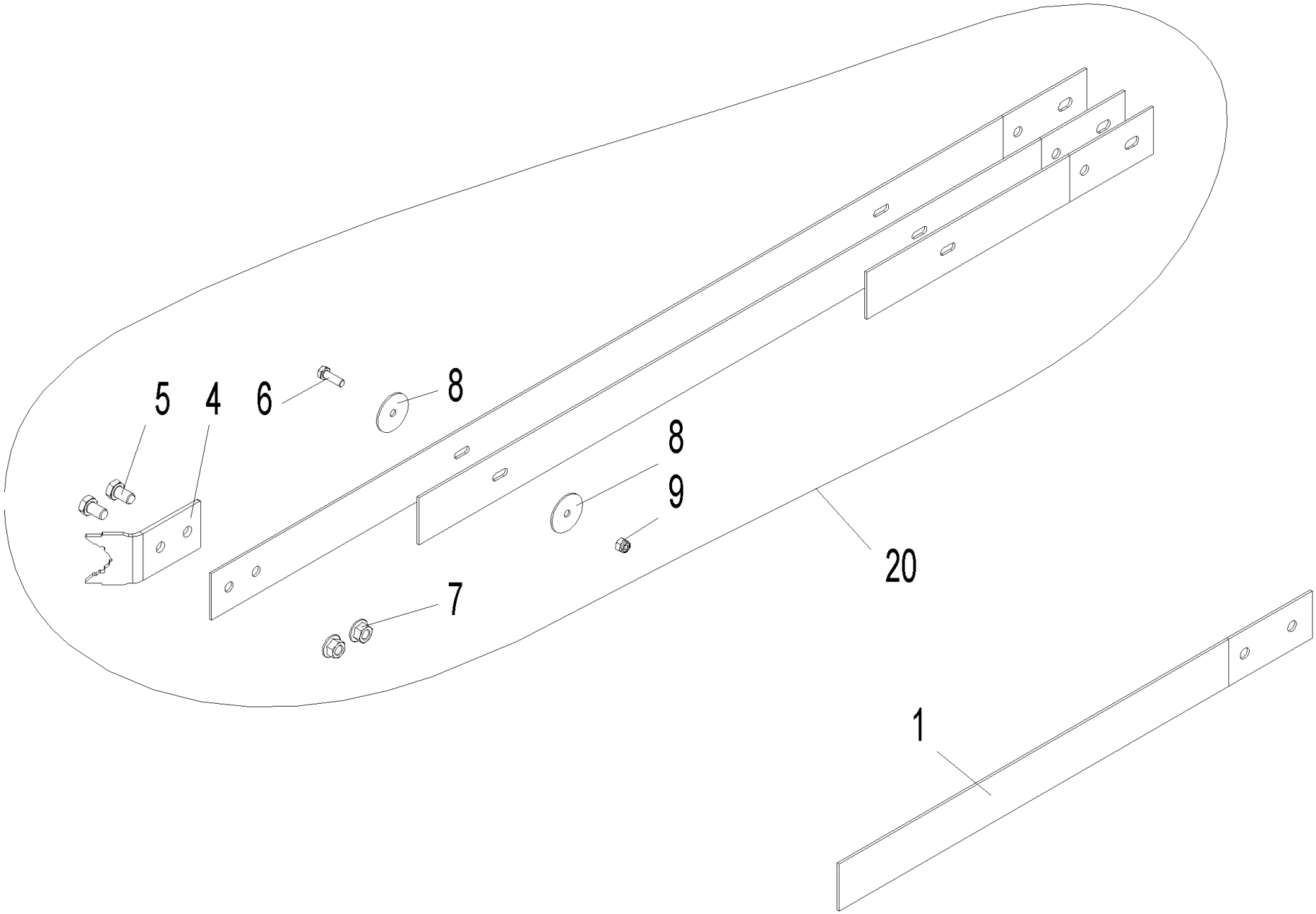

Leaf spring (A000183)

Item no.	Article no.	Description	Quantity	Unit
4	054058	de: Kralle Blattfeder PW	2.00	pcs
1	054265	de: PW00 Ausräumfeder Rührwerk zu Austragung Zuführung direkt/pneumatisch	1.00	pcs
20	053012	de: PW39 Blattfeder 60mm für Rührwerk Ø1500mm zu Austragung DIREKT / PNEUMATISCH	2.00	pcs
20	053013	de: PW41 Blattfeder 60mm für Rührwerk Ø2000mm zu Austragung DIREKT / PNEUMATISCH	2.00	pcs
20	053014	de: PW42 Blattfeder 60mm für Rührwerk Ø2500mm zu Austragung DIREKT / PNEUMATISCH	2.00	pcs
20	053015	de: PW43 Blattfeder 60mm für Rührwerk Ø3000mm zu Austragung DIREKT / PNEUMATISCH	2.00	pcs
20	053016	de: PW44 Blattfeder 60mm für Rührwerk Ø3500mm zu Austragung DIREKT / PNEUMATISCH	2.00	pcs
20	053017	de: PW45 Blattfeder 60mm für Rührwerk Ø4000mm zu Austragung DIREKT / PNEUMATISCH	2.00	pcs
20	053018	de: PW46 Blattfeder 60mm für Rührwerk Ø4500mm zu Austragung DIREKT / PNEUMATISCH	2.00	pcs
20	053019	de: PW47 Blattfeder 60mm für Rührwerk Ø5000mm zu Austragung DIREKT / PNEUMATISCH	2.00	pcs
5	017868	de: Sechskantschraube DIN 933 - M12x20 - 8.8	1.00	pcs
9	016729	de: Sicherungsmutter DIN 985 - M 8 - 8 - verzinkt	1.00	pcs
7	016569	de: Sperrzahnmutter M12 verzinkt (ähnlich DIN6923 8)	1.00	pcs
8	055404	de: U-Scheibe Blattfeder	1.00	pcs
6	017191	Hexagon screw M8x25 DIN 933	1.00	pcs

Masonry feed-through (A000177)

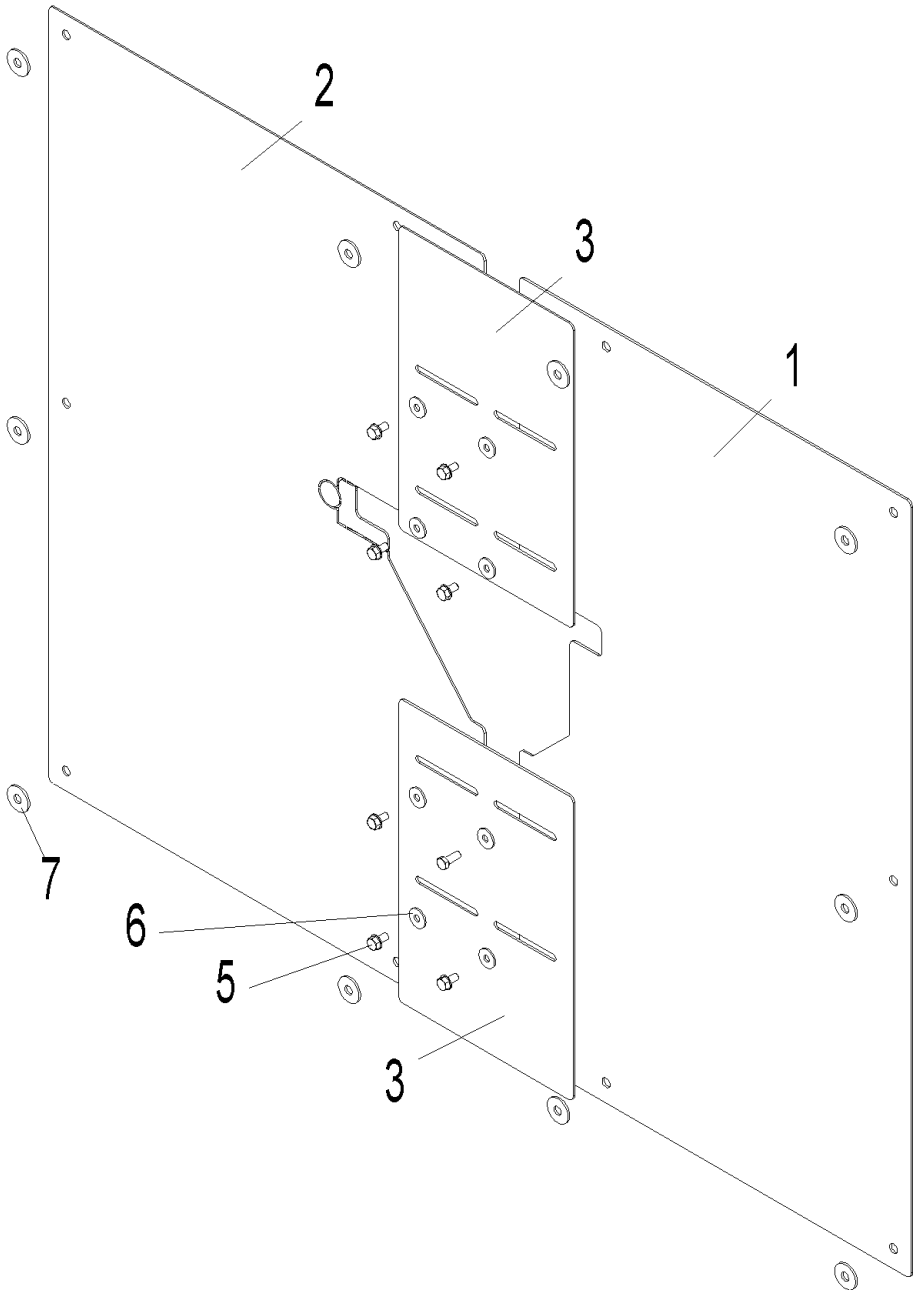

Masonry feed-through (A000177)

Item no.	Article no.	Description	Quantity	Unit
2	054050	de: Mauerdurchführung links PW	1.00	pcs
3	054052	de: Mauerdurchführung Mitte PW	2.00	pcs
1	054051	de: Mauerdurchführung rechts PW	1.00	pcs
6	031753	Disc 6 ISO 7093	8.00	pcs
7	031755	Disc 8 ISO 7093	10.00	pcs
4	024759	Hexagon screw DIN 933 - M6x16 - 8.8 - galvanised for VarioWIN	1.00	pcs
5	031549	Hexagon screw M6x12 DIN 7500	7.00	pcs

Stoker screw (A000165)

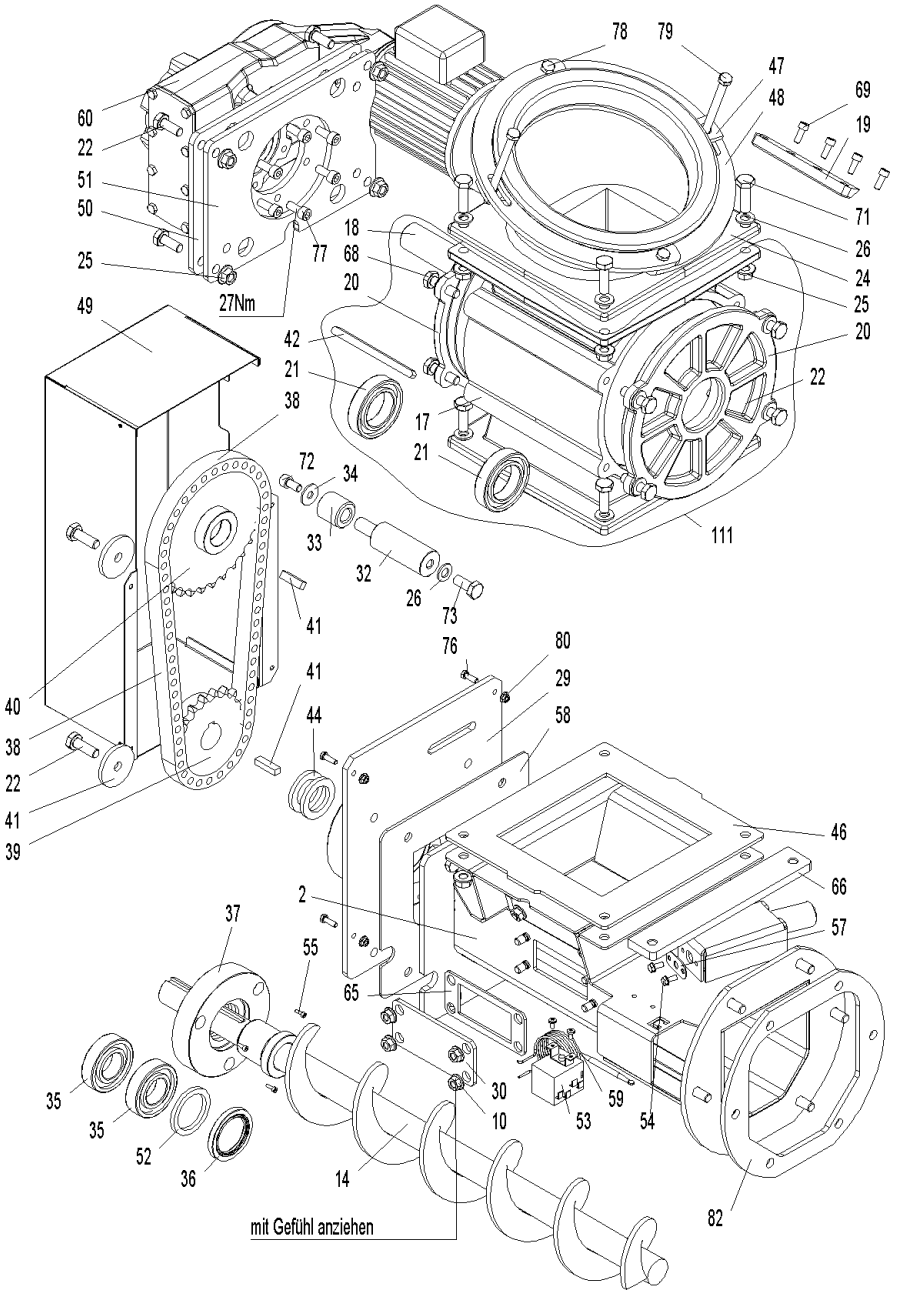

Stoker screw (A000165)

Item no.	Article no.	Description	Quantity	Unit
68	016713	ASN0251 Hexagon screw M10x35, DIN 933 for SilvaWIN, BioWIN XL 35-60, fittings cabinet Vesto 200	12.00	pcs
69	033532	Cylinder screw M6x16, DIN 912 for BioWIN XL 35-60	8.00	pcs
72	016773	Cylinder screw M8x16 ISO 4762	1.00	pcs
10	053121	de: Anschluss Ablauf PW	1.00	pcs
57	052003	de: Blende A Spülluft PW	1.00	pcs
20	051452	de: Deckel Schleuse 200 PW	2.00	pcs
82	052095	de: Dichtung Schneckenrohr für Hackgut D238/D205x6 Material C-4400 (Klingersil)	1.00	pcs
58	053428	de: Dichtung Stoker, Erdalkalisilikatfaser PW	1.00	pcs
65	054268	de: Dichtung Wartung Stoker PW	1.00	pcs
44	051937	de: Distanzscheibe 30 PW	2.00	pcs
14	051469	de: Dosierschnecke kpl. PW	1.00	pcs
50	053410	de: Drehmomentstütze Stoker PW	1.00	pcs
52	052858	de: Filzring 42 DIN5419 F2 (54x42x5) PW	1.00	pcs
24	053400	de: Flansch B Schleuse 200 PW	1.00	pcs
17	051450	de: Gehäuse Zellradschleuse PW	1.00	pcs
39	051461	de: Kettenrad DIN 8192 - B 20Z 10B-1, Ø30 (5/8"x3/8") PW	1.00	pcs
40	051460	de: Kettenrad DIN 8192 - B 30Z 10B-1, Ø35 (5/8"x3/8") PW	2.00	pcs
49	052646	de: Kettenschutz Stoker vorne PW	1.00	pcs
32	052339	de: Kettenspannerwelle PW	1.00	pcs
33	052341	de: Kettenspannrolle PW	1.00	pcs
37	052800	de: Lagerabdeckung 02 PW	1.00	pcs
29	051957	de: Lagerflansch Dosier. kpl. PW	1.00	pcs

Stoker screw (A000165)

Item no.	Article no.	Description	Quantity	Unit
19	051453	de: Messer Schleuse 200 PW	2.00	pcs
51	053417	de: Motorflansch Schleuse 220 PW	1.00	pcs
60	054758	de: Motor Stoker mit Flansch PW	1.00	pcs
42	052627	de: Passfeder A8x7x120, DIN 6885 A PW	1.00	pcs
41	051961	de: Passfeder B8x7x30 DIN 6885 B PW	2.00	pcs
46	052327	de: Plattendichtung 240 PW	1.00	pcs
35	051936	de: Rillenkugellager (Ø30, Ø62, 16mm) PW	2.00	pcs
21	051456	de: Rillenkugellager (Ø40, Ø68, 15mm) PW	2.00	pcs
38	052326	de: Rollenkette Lochabstand mit Verschluss montiert = 952,5mm; Baugröße: 5/8 x 3/8 x 10,16; Länge geschlossen 952,5 mm, Kettenbreite	1.00	pcs
2	051945	de: Schneckenrohr kpl. PW	1.00	pcs
76	015025	de: Sechskantschraube DIN 933 - M5x16 - 8.8 - verzinkt	4.00	pcs
78	032653	de: Sechskantschraube DIN 933 - M8x30 - 8.8 - verzinkt	2.00	pcs
79	052352	de: Sechskantschraube DIN 933 - M8x110 - 8.8 - verzinkt	2.00	pcs
73	033538	de: Sechskantschraube DIN 933 - M10x25- 8.8-verzinkt - beschichtet mit Gleitlack bc2571 (bis 600°C)	1.00	pcs
22	054269	de: Sechskantschraube DIN 933 - M10x30 - 8.8 - verzinkt	20.00	pcs
48	051458	de: Spannring Dir. PW	2.00	pcs
47	051959	de: Spannring Dir. U-Scheibe PW	2.00	pcs
81	054264	de: STW 88°C mit Kabel PW	1.00	pcs
43	051940	de: U-Scheibe 10x48x5 PW	1.00	pcs
66	054523	de: Versteifungspl. Stoker	1.00	pcs
30	053134	de: Wartungsdeckel kpl. Stoker PW	2.00	pcs

Stoker screw (A000165)

Item no.	Article no.	Description	Quantity	Unit
53	005673	de: Wächterthermostat (Typ 602031,Schaltpunkt 88°) VW, PW	1.00	pcs
36	053103	de: Wellendichtring DIN 3760AS AD60 ID42 Höhe 7, NBR, PW	1.00	pcs
18	051451	de: Zellenrad 200 PW	1.00	pcs
111	051457	de: Zellradschleuse 200 PW	1.00	pcs
59	016772	de: Zyl.-Schrauben M4x8 verz.m.KS DIN 7985	2.00	pcs
55	053095	de: Zylinderschraube m. Innensechskant ISO 4762 - M 8 x 35 - 8.8 - verzinkt (DIN 912)	3.00	pcs
77	053834	de: Zylinderschraube m. Innensechskant M8 x 20 - A4	6.00	pcs
34	031755	Disc 8 ISO 7093	1.00	pcs
999	501012	FK-060 Thermal process safeguard	1.00	pcs
80	016565	Hexagon nut M5 with flange and gearing (not illustrated)	4.00	pcs
25	016567	Hexagon nut M10 with flange and gearing (not illustrated)	16.00	pcs
54	031545	Hexagon screw M5x12 DIN 7500 (not ilustrated)	2.00	pcs
71	016712	Hexagon screw M10x35, DIN 933 for BioWIN XL 35-60	4.00	pcs
26	018058	U-washer	9.00	pcs

Agitator (A000171)

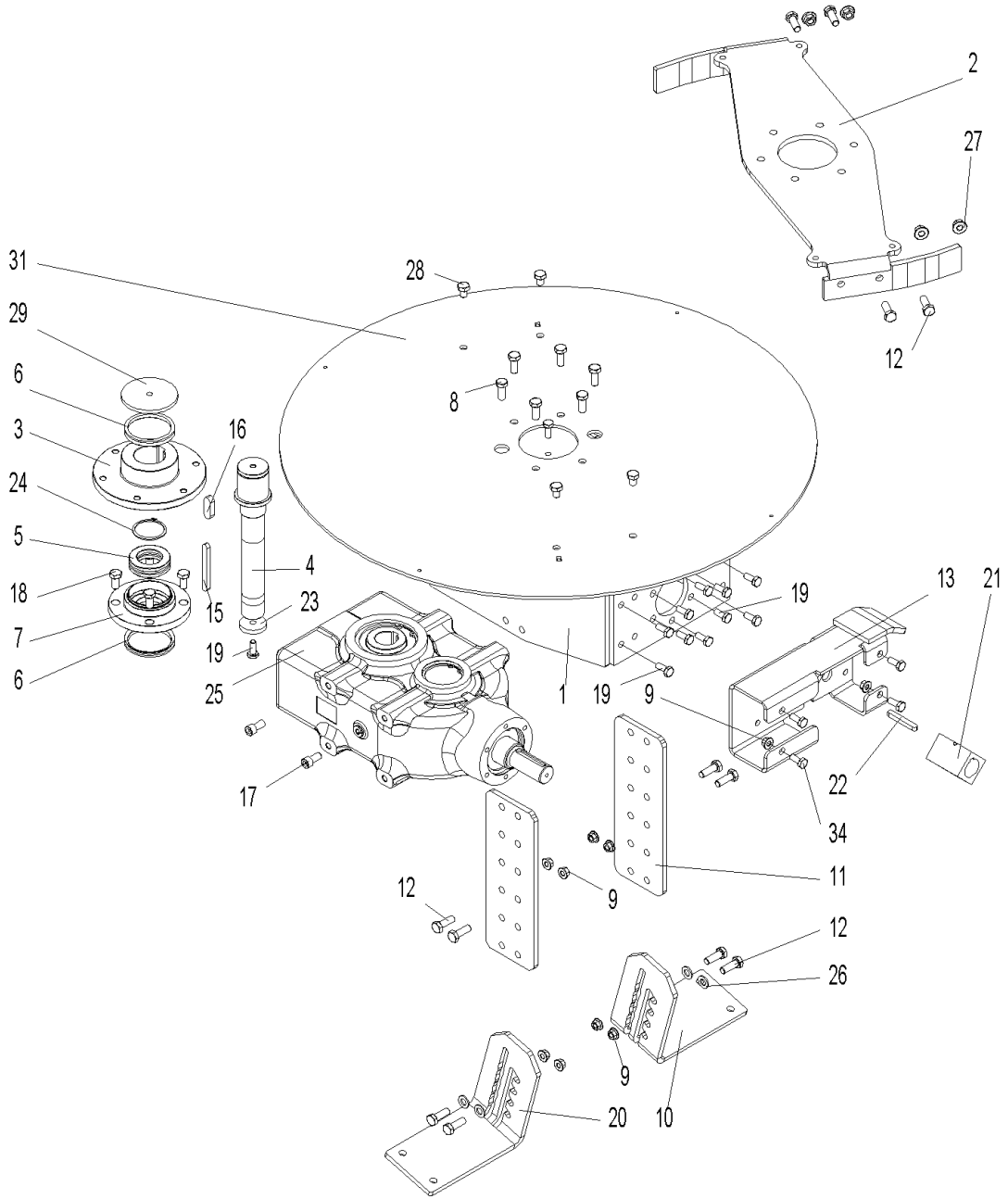

Agitator (A000171)

Item no.	Article no.	Description	Quantity	Unit
17	020117	Cylinder-head screw, hexagon socket ISO 4762 - M12x25 - 8.8 - galva. (DIN 912) for VarioWIN, FireWIN, BioWIN10-26, LogWIN Premium	4.00	pcs
13	053403	de: Aufnahme Trog ge. PW	1.00	pcs
5	053075	de: Axial Rillenkugellager Ø73 x Ø45 x 20	1.00	pcs
2	053079	de: Blattfederhalter Rührwerk PW	1.00	pcs
1	053071	de: Gehäuse Rührwerk PW	1.00	pcs
29	054282	de: Halter V-Ring Rührwerk oben PW	1.00	pcs
21	053750	de: Kupplung Getriebe PW	1.00	pcs
3	053401	de: Lagerflansch oben Rührwerk PW	1.00	pcs
7	053077	de: Lagerflansch unten Rührwerk PW	1.00	pcs
22	052628	de: Passfeder A10x8x70, DIN 6885 A	1.00	pcs
15	053406	de: Passfeder A12x8x100, DIN 6885 A	1.00	pcs
16	053407	de: Passfeder A16x10x45, DIN 6885 A	1.00	pcs
25	052846	de: Rührwerksgetriebe 1:16 PW	1.00	pcs
31	054508	de: Scheibe Blattfeder ge. PW	1.00	pcs
19	033538	de: Sechskantschraube DIN 933 - M10x25- 8.8-verzinkt - beschichtet mit Gleitlack bc2571 (bis 600°C)	12.00	pcs
28	054503	de: Sechskantschraube DIN 933 - M12x16 - 8.8 - verzinkt	4.00	pcs
8	017841	de: Sechskantschraube DIN 933 - M12x30 - 8.8	6.00	pcs
12	017867	de: Sechskantschraube DIN 933 - M12x35 - 8.8 - verzinkt	12.00	pcs
24	053873	de: Sicherungsring DIN 471 - 55 X 2	1.00	pcs
27	016569	de: Sperrzahnmutter M12 verzinkt (ähnlich DIN6923 8)	4.00	pcs
9	016569	de: Sperrzahnmutter M12 verzinkt (ähnlich DIN6923 8)	12.00	pcs

Agitator (A000171)

Item no.	Article no.	Description	Quantity	Unit
23	054524	de: U-Scheibe 10x48x8	1.00	pcs
6	053081	de: V-Ring Type A 73-79 NBR, PW	2.00	pcs
11	053404	de: Verlängerung Fuß Rührwerk PW	2.00	pcs
4	053402	de: Welle Getriebe PW	1.00	pcs
10	052030	de: Winkel Ständer Rührwerk links PW	1.00	pcs
20	053429	de: Winkel Ständer Rührwerk rechts PW	1.00	pcs
18	017205	Hexagon screws M12x25-8.8	4.00	pcs
26	017183	U-Washer DIN 125B - M12 - galvanised for VarioWIN, FireWIN, BioWIN XL 35-60	4.00	pcs

Control thermostat (A000178)

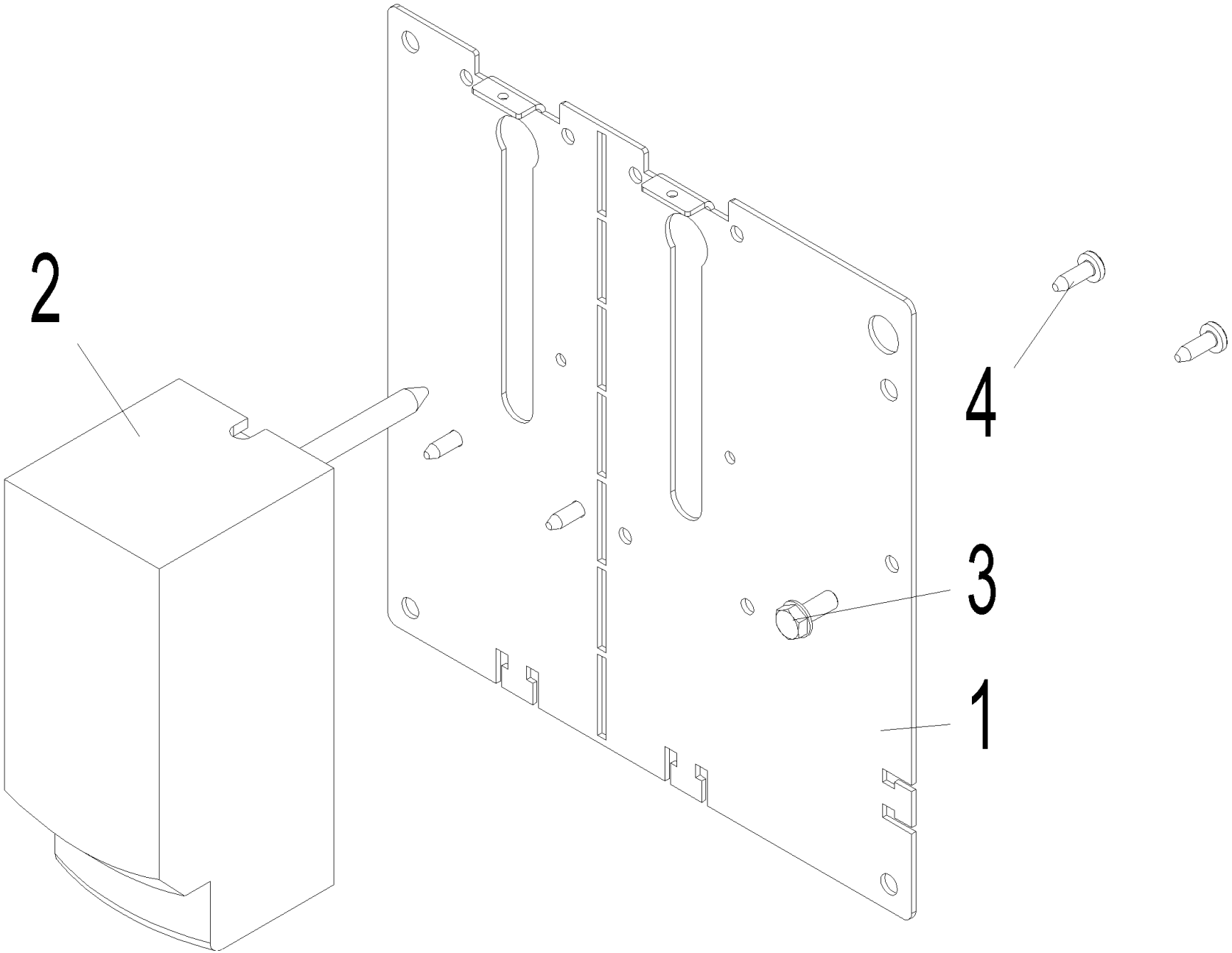

Control thermostat (A000178)

Item no.	Article no.	Description	Quantity	Unit
2	001605	de: AK-075 Regel-Thermostat für Boiler oder Pufferspeicher RAK TW 1000S-H (700mm Kapillarrohr, ohne Schutzrohr) für AK161R bis AK501R	2.00	pcs
1	054273	de: Befestigungsplatte STB RAK, PW	1.00	pcs
4	032271	de: Zyl.Bl.Schr.4,2x13NORM.Ausführ. DIN 7981 verz.	4.00	pcs
3	031545	Hexagon screw M5x12 DIN 7500 (not ilustrated)	1.00	pcs

Conveyor duct (A000170)

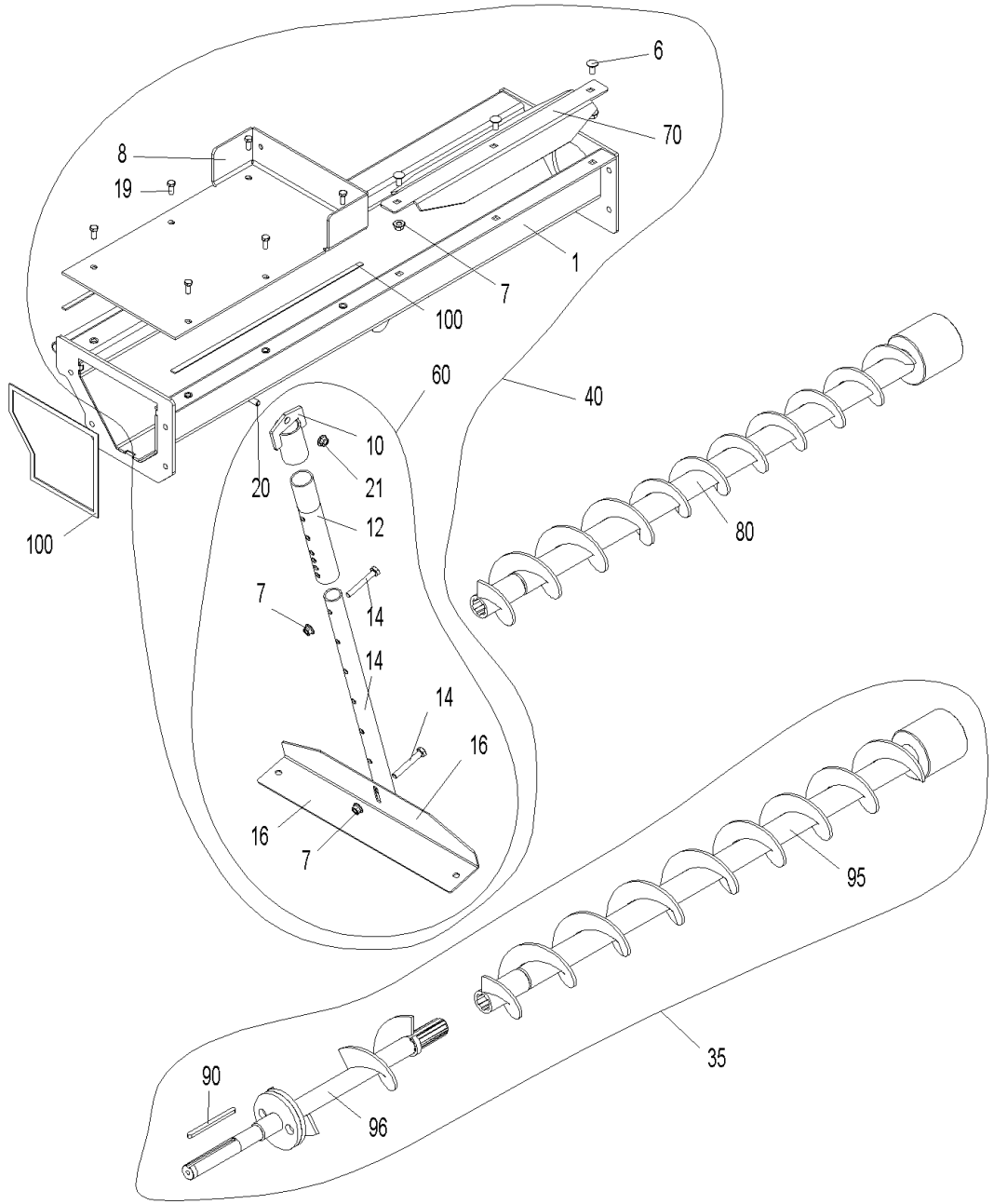

Conveyor duct (A000170)

Item no.	Article no.	Description	Quantity	Unit
8	051998	de: Abdeckung Austragung	1.00	pcs
1	052519	de: Austragschacht ge. 904 für RW1500	1.00	pcs
1	052520	de: Austragschacht ge. L=1154 für RW2000	1.00	pcs
1	052521	de: Austragschacht ge. L=1404 für RW2500	1.00	pcs
1	052524	de: Austragschacht ge. L=1654 für RW3000	1.00	pcs
1	052526	de: Austragschacht ge. L=1904 für RW3500	1.00	pcs
1	052527	de: Austragschacht ge. L=2154 für RW4000	1.00	pcs
1	052528	de: Austragschacht ge. L=2404 für RW4500	1.00	pcs
1	052529	de: Austragschacht ge. L=2654 für RW5000	1.00	pcs
100	054793	de: Dichtungsband 10x2 Ersatzteil 2,25 Meter	1.00	pcs
70	052542	de: Einlaufblech A, L=0305 für RW1500	1.00	pcs
70	052543	de: Einlaufblech A, L=0555 für RW2000	1.00	pcs
70	052544	de: Einlaufblech A, L=0809 für RW2500	1.00	pcs
70	052545	de: Einlaufblech A, L=1055 für RW3000	1.00	pcs
70	052546	de: Einlaufblech A, L=1305 für RW3500	1.00	pcs
70	052547	de: Einlaufblech A, L=1555 für RW4000	1.00	pcs
70	052549	de: Einlaufblech A, L=1805 für RW4500	1.00	pcs
70	052550	de: Einlaufblech A, L=2255 für RW5000	1.00	pcs
10	052032	de: Einstellgewindehülse Stütze	1.00	pcs
6	052027	de: Flachrundschraube mit Vierkantansatz DIN 603 M10x20	3.00	pcs
3	051995	de: Flanschplatte Austragung hinten	1.00	pcs
2	051989	de: Flanschplatte Schacht Schnecke	1.00	pcs

Conveyor duct (A000170)

Item no.	Article no.	Description	Quantity	Unit
4	052035	de: Halter Stütze RW	1.00	pcs
13	052039	de: Lamellenstopfen GPN 320 GL30 1-2	1.00	pcs
96	054530	de: P2W6 Schnecke PS ge. pneumatisch	1.00	pcs
95	054535	de: P2W30 Austragschnecke zu Austragung- Zuführung pneumatisch mit Rührwerk Ø1500mm	1.00	pcs
95	054536	de: P2W31 Austragschnecke zu Austragung- Zuführung pneumatisch mit Rührwerk Ø2000mm	1.00	pcs
95	054537	de: P2W32 Austragschnecke zu Austragung- Zuführung pneumatisch mit Rührwerk Ø2500mm	1.00	pcs
95	054538	de: P2W33 Austragschnecke zu Austragung- Zuführung pneumatisch mit Rührwerk Ø3000mm	1.00	pcs
95	054539	de: P2W34 Austragschnecke zu Austragung- Zuführung pneumatisch mit Rührwerk Ø3500mm	1.00	pcs
95	054540	de: P2W35 Austragschnecke zu Austragung- Zuführung pneumatisch mit Rührwerk Ø4000mm	1.00	pcs
95	054541	de: P2W36 Austragschnecke zu Austragung- Zuführung pneumatisch mit Rührwerk Ø4500mm	1.00	pcs
95	054543	de: P2W37 Austragschnecke zu Austragung- Zuführung pneumatisch mit Rührwerk Ø5000mm	1.00	pcs
90	052627	de: Passfeder A8x7x120, DIN 6885 A PW	1.00	pcs
35	054770	de: PW03 Austragschnecke zu Austragung- Zuführung pneumatisch mit Rührwerk Ø1500mm	1.00	pcs
40	052532	de: PW10 Austragungsschacht montiert zu Austragung-Zuführung direkt / pneumatisch mit Rührwerk Ø1500mm	1.00	pcs
40	052533	de: PW11 Austragungsschacht montiert zu Austragung-Zuführung direkt / pneumatisch mit Rührwerk Ø2000mm	1.00	pcs
40	052534	de: PW12 Austragungsschacht montiert zu Austragung-Zuführung direkt / pneumatisch mit Rührwerk Ø2500mm	1.00	pcs

Conveyor duct (A000170)

Item no.	Article no.	Description	Quantity	Unit
40	052535	de: PW13 Austragungsschacht montiert zu Austragung-Zuführung direkt / pneumatisch mit Rührwerk Ø3000mm	1.00	pcs
40	052536	de: PW14 Austragungsschacht montiert zu Austragung-Zuführung direkt / pneumatisch mit Rührwerk Ø3500mm	1.00	pcs
40	052537	de: PW15 Austragungsschacht montiert zu Austragung-Zuführung direkt / pneumatisch mit Rührwerk Ø4000mm	1.00	pcs
40	052538	de: PW16 Austragungsschacht montiert zu Austragung-Zuführung direkt / pneumatisch mit Rührwerk Ø4500mm	1.00	pcs
40	052539	de: PW17 Austragungsschacht montiert zu Austragung-Zuführung direkt / pneumatisch mit Rührwerk Ø5000mm	1.00	pcs
80	052618	de: PW20 Austragschnecke zu Austragung- Zuführung direkt mit Rührwerk Ø1500mm	1.00	pcs
80	052619	de: PW21 Austragschnecke zu Austragung- Zuführung direkt mit Rührwerk Ø2000mm	1.00	pcs
80	052620	de: PW22 Austragschnecke zu Austragung- Zuführung direkt mit Rührwerk Ø2500mm	1.00	pcs
80	052622	de: PW23 Austragschnecke zu Austragung- Zuführung direkt mit Rührwerk Ø3000mm	1.00	pcs
80	052624	de: PW25 Austragschnecke zu Austragung- Zuführung direkt mit Rührwerk Ø4000mm	1.00	pcs
80	052625	de: PW26 Austragschnecke zu Austragung- Zuführung direkt mit Rührwerk Ø4500mm	1.00	pcs
80	052626	de: PW27 Austragschnecke zu Austragung- Zuführung direkt mit Rührwerk Ø5000mm	1.00	pcs
35	054772	de: PW31 Austragschnecke zu Austragung- Zuführung pneumatisch mit Rührwerk Ø2000mm	1.00	pcs
35	054773	de: PW32 Austragschnecke zu Austragung- Zuführung pneumatisch mit Rührwerk Ø2500mm	1.00	pcs
35	054774	de: PW33 Austragschnecke zu Austragung- Zuführung pneumatisch mit Rührwerk Ø3000mm	1.00	pcs
35	054775	de: PW34 Austragschnecke zu Austragung- Zuführung pneumatisch mit Rührwerk Ø3500mm	1.00	pcs
35	054777	de: PW35 Austragschnecke zu Austragung- Zuführung pneumatisch mit Rührwerk Ø4000mm	1.00	pcs
35	054778	de: PW36 Austragschnecke zu Austragung- Zuführung pneumatisch mit Rührwerk Ø4500mm	1.00	pcs
35	054779	de: PW37 Austragschnecke zu Austragung- Zuführung pneumatisch mit Rührwerk Ø5000mm	1.00	pcs

Conveyor duct (A000170)

Item no.	Article no.	Description	Quantity	Unit
80	052623	de: PW89 Austragschnecke zu Austragung- Zuführung direkt mit Rührwerk Ø3500mm	1.00	pcs
5	052026	de: Rohr Fühler Lager	1.00	pcs
14	031607	de: Sechskantschraube DIN 933 - M10x70 - 8.8 - verzinkt	3.00	pcs
20	017867	de: Sechskantschraube DIN 933 - M12x35 - 8.8 - verzinkt	1.00	pcs
21	016569	de: Sperrzahnmutter M12 verzinkt (ähnlich DIN6923 8)	1.00	pcs
12	052037	de: Stütze oben	1.00	pcs
60	052038	de: Stütze Rührwerk kpl. PuroWIN	1.00	pcs
9	052036	de: Stütze unten	1.00	pcs
16	053431	de: Winkel Ständer Schacht	2.00	pcs
7	016567	Hexagon nut M10 with flange and gearing (not illustrated)	5.00	pcs
19	017086	Hexagon screw M8x20 DIN 933 (not illustrated)	6.00	pcs
17	016156	Rivet nut M8 for VarioWIN, FireWIN, BioWIN XL 35-60	6.00	pcs

Extensions (A000204)

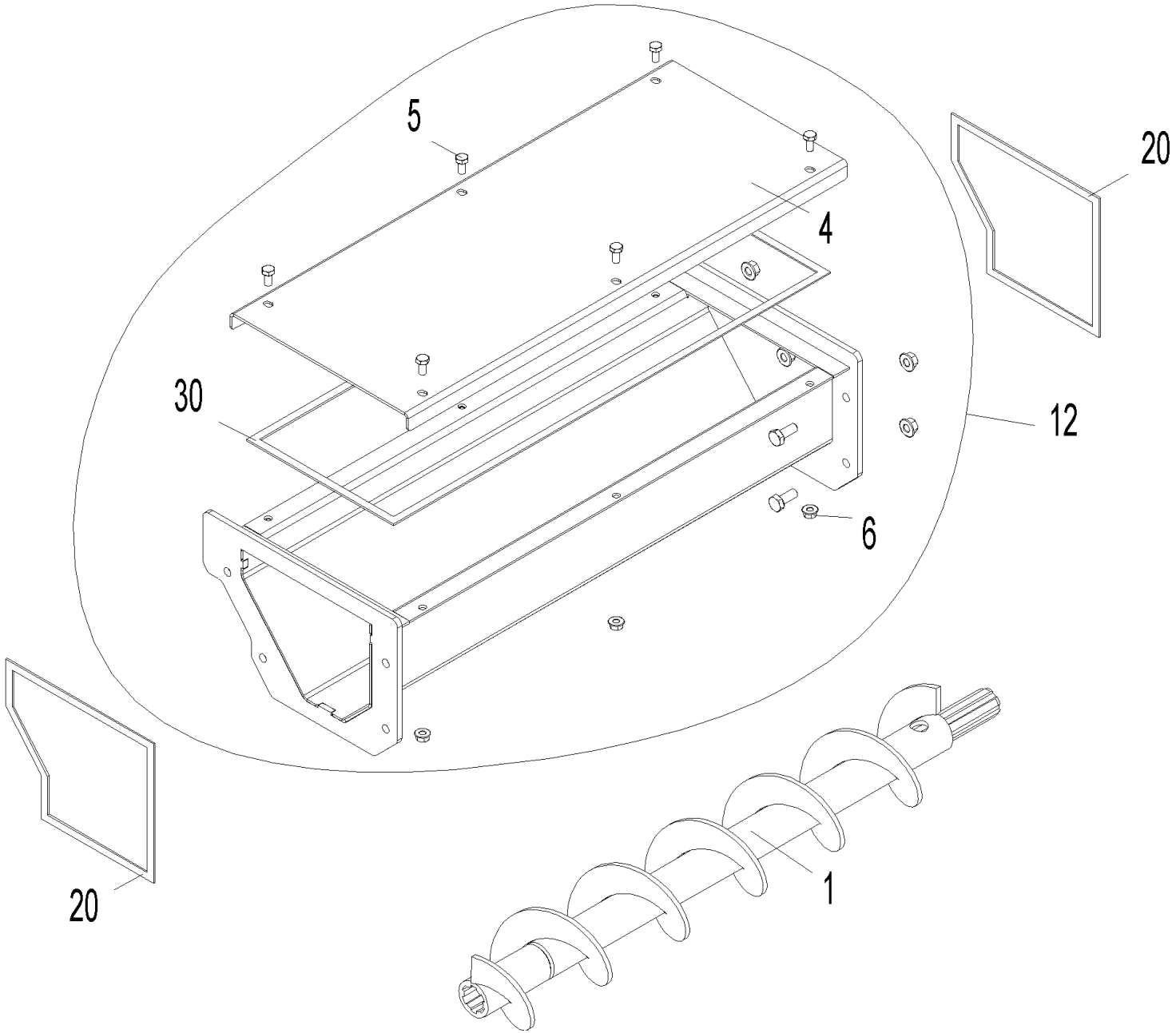

Extensions (A000204)

Item no.	Article no.	Description	Quantity	Unit
4	052420	de: Abdeckung Verlängerung L=0680	1.00	pcs
4	052427	de: Abdeckung Verlängerung L=1640	1.00	pcs
20	054793	de: Dichtungsband 10x2 Ersatzteil 2,25 Meter	1.00	pcs
30	054794	de: Dichtungsband 10x2 Ersatzteil 4,5 Meter	1.00	pcs
12	052450	de: PW54 Verlängerung Länge 600 mm zu Zuführung direkt / pneumatisch	1.00	pcs
12	052458	de: PW61 Verlängerung Länge 1680 mm zu Zuführung direkt / pneumatisch	1.00	pcs
1	054544	de: PW69P Schnecke L=600mm für Verlängerung Zuführung pneumatisch,	1.00	pcs
1	054545	de: PW76P Schnecke L=1680mm für Verlängerung Zuführung pneumatisch,	1.00	pcs
6	016553	Hexagon nut M8 with flange and gearing	6.00	pcs
5	015134	Hexagon screw M8x16 DIN 933	6.00	pcs

Extensions (A000204)

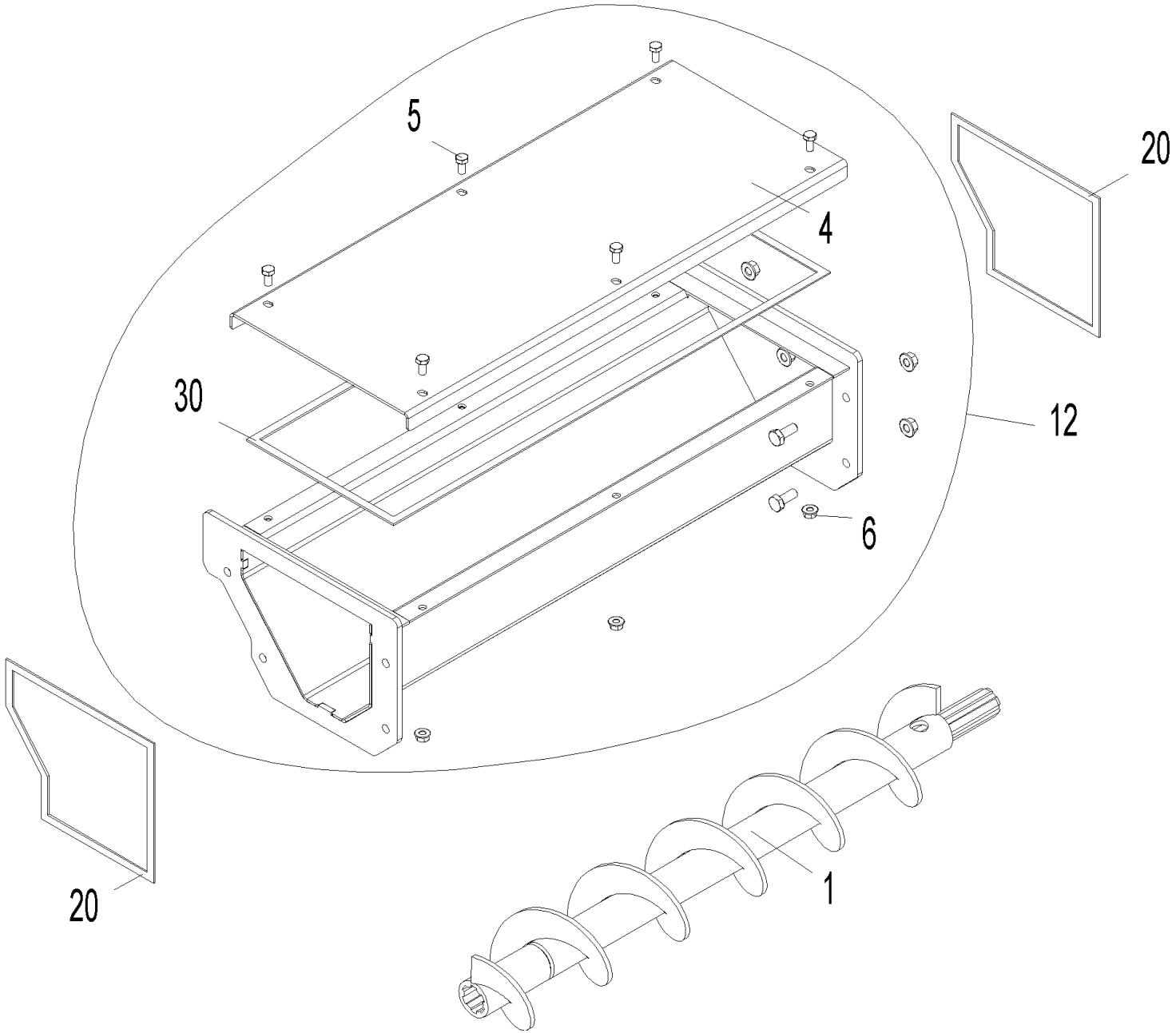

Extensions (A000204)

Item no.	Article no.	Description	Quantity	Unit
4	052420	de: Abdeckung Verlängerung L=0680	1.00	pcs
4	052427	de: Abdeckung Verlängerung L=1640	1.00	pcs
20	054793	de: Dichtungsband 10x2 Ersatzteil 2,25 Meter	1.00	pcs
30	054794	de: Dichtungsband 10x2 Ersatzteil 4,5 Meter	1.00	pcs
12	052450	de: PW54 Verlängerung Länge 600 mm zu Zuführung direkt / pneumatisch	1.00	pcs
12	052458	de: PW61 Verlängerung Länge 1680 mm zu Zuführung direkt / pneumatisch	1.00	pcs
1	054544	de: PW69P Schnecke L=600mm für Verlängerung Zuführung pneumatisch,	1.00	pcs
1	054545	de: PW76P Schnecke L=1680mm für Verlängerung Zuführung pneumatisch,	1.00	pcs
6	016553	Hexagon nut M8 with flange and gearing	6.00	pcs
5	015134	Hexagon screw M8x16 DIN 933	6.00	pcs

Fire protection slider 1 (A000174)

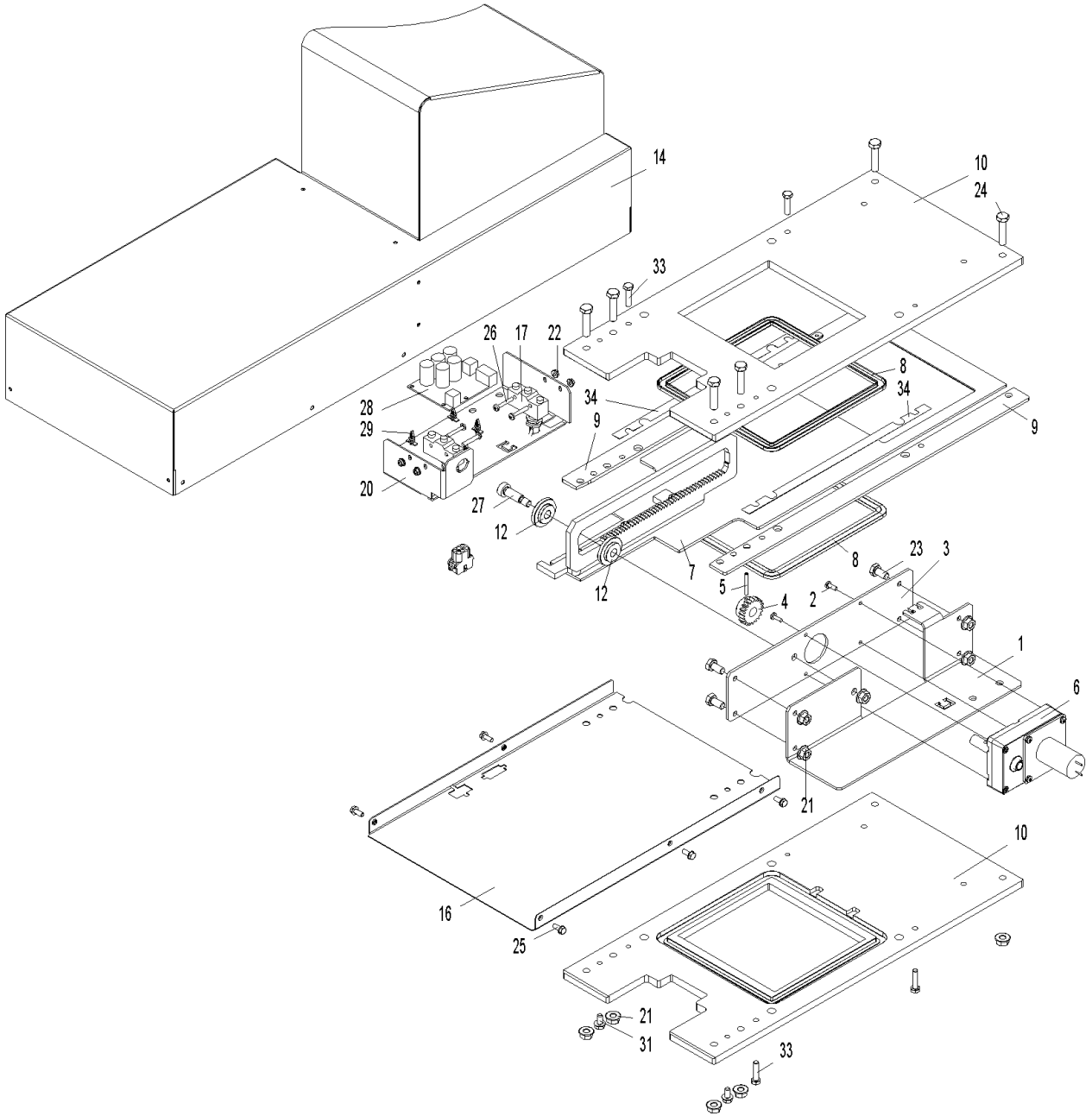

Fire protection slider 1 (A000174)

Item no.	Article no.	Description	Quantity	Unit
17	006936	Ash removal microswitch Z-15GQ21-B for 3-way changeover unit for PMX, BioWIN XL 35-60	2.00	pcs
12	007125	Bearing for vibrating drive	2.00	pcs
5	018665	Clamping pin 4x30, DIN 1481, for 3-way changeover unit for BioWIN XL 35-60 * not illustrated	1.00	pcs
2	016780	Cylinder screw M4x12 DIN 7985	4.00	pcs
14	054279	de: Abdeckung BSS1 unten kpl.	1.00	pcs
40	053375	de: Anschluss Supercap BSS1	1.00	pcs
8	052349	de: Dichtung BSS 1,5	2.00	pcs
9	052687	de: Distanzleiste BSS1	2.00	pcs
10	051999	de: Gehäuse oben BSS1	2.00	pcs
41	053364	de: Kabel Mikroschalter BSS1 PW	1.00	pcs
42	053362	de: Kabel Motor BSS1 PW	1.00	pcs
20	052822	de: Mikroschalter Halter BSS1	1.00	pcs
6	054553	de: Motor BSS1 un. mit Stirnrad	1.00	pcs
1	052817	de: Motorflansch BSS1 PW	1.00	pcs
28	012008	de: Platine Supercap 12V PW	1.00	pcs
3	052836	de: Platte Motor BSS1 PW	1.00	pcs
7	052002	de: Schieber BSS1	1.00	pcs
16	052821	de: Schutz unten BSS1	1.00	pcs
24	031550	de: Sechskantschraube DIN 931 - M8x35 - 8.8 - verzinkt	6.00	pcs
22	016564	de: Sperrzahnmutter M4 verzinkt	4.00	pcs
4	052154	de: Stirnrad PW24-60	1.00	pcs
34	054522	de: Unterlagsfolie BSS1	2.00	pcs

Fire protection slider 1 (A000174)

Item no.	Article no.	Description	Quantity	Unit
26	016802	de: Zyl.-Schrauben M4x25 verz.m.KS DIN 7985	4.00	pcs
21	016553	Hexagon nut M8 with flange and gearing	14.00	pcs
33	015041	Hexagon screw DIN 933 - M6x25 - 8.8 - galvanised for VarioWIN, FireWIN	4.00	pcs
25	031545	Hexagon screw M5x12 DIN 7500 (not ilustrated)	5.00	pcs
31	031549	Hexagon screw M6x12 DIN 7500	2.00	pcs
23	015134	Hexagon screw M8x16 DIN 933	4.00	pcs
29	007609	PCB holder	5.00	pcs
27	017048	Shoulder screw M8 10x25 ISO 7379	1.00	pcs

Fire protection slider 2 (A000175)

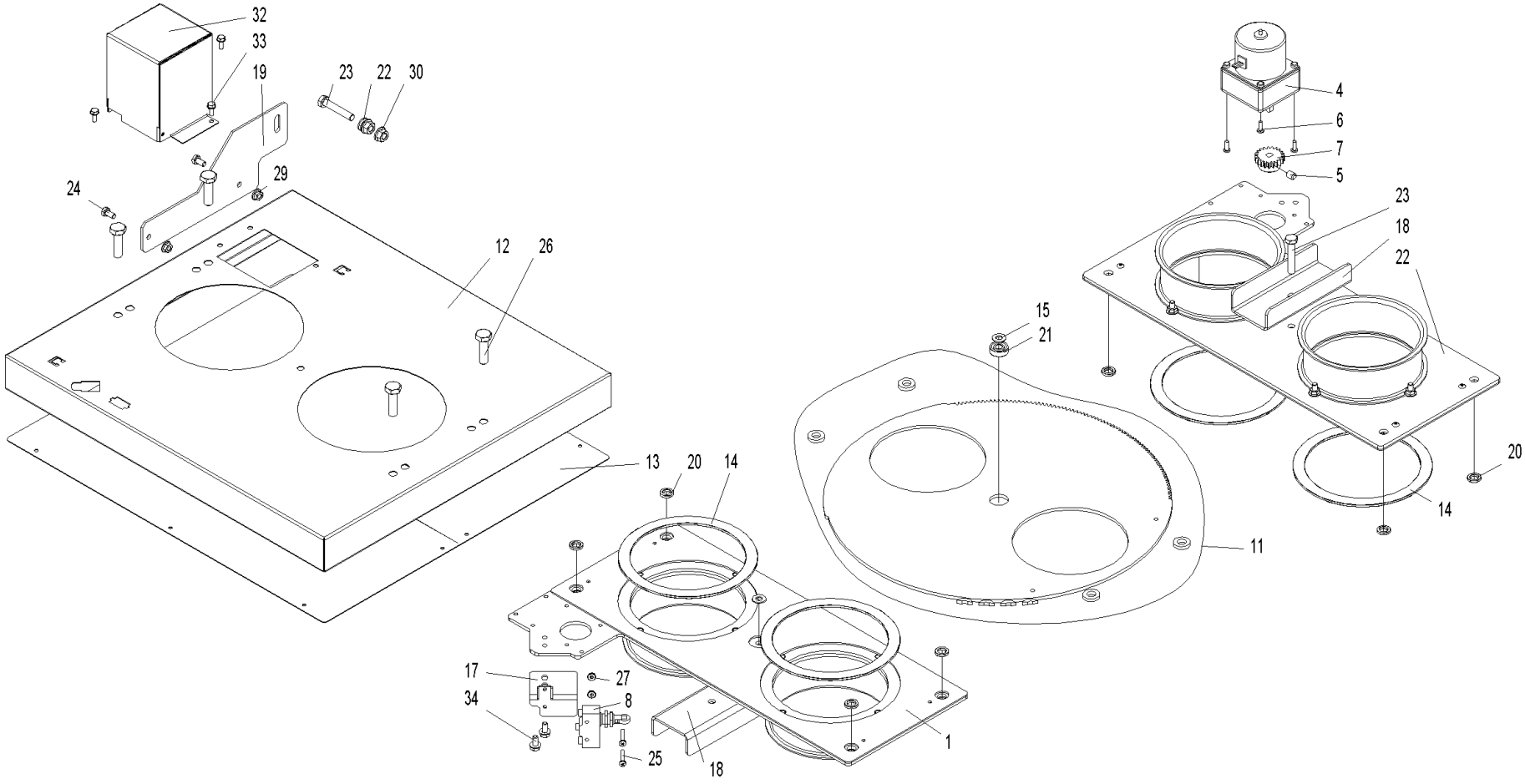

Fire protection slider 2 (A000175)

Item no.	Article no.	Description	Quantity	Unit
8	006936	Ash removal microswitch Z-15GQ21-B for 3-way changeover unit for PMX, BioWIN XL 35-60	1.00	pcs
6	016780	Cylinder screw M4x12 DIN 7985	3.00	pcs
32	054056	de: Abdeckung Motor BSS2	1.00	pcs
17	052848	de: Aufnahme Mikroschalter BSS2	1.00	pcs
19	053108	de: Befestigung BSS2	1.00	pcs
14	052695	de: Dichtung BSS2	4.00	pcs
1	054527	de: Flansch BSS2 oben kpl.	2.00	pcs
12	052688	de: Gehäuse BSS2	1.00	pcs
13	052689	de: Gehäusedeckel BSS2	1.00	pcs
20	053126	de: Hülse BSS2	8.00	pcs
18	053084	de: Mittelstrebe BSS2	2.00	pcs
21	053127	de: Rillenkugellager DIN625, 608-2RS1	1.00	pcs
41	054401	de: Schalter BSSO kpl. montiert PW	1.00	pcs
15	052691	de: Scheibe 16x8x1,5	2.00	pcs
27	016564	de: Sperrzahnmutter M4 verzinkt	2.00	pcs
11	052839	de: Stirnscheibe BSS2	1.00	pcs
40	054024	de: Zwischenstück BSSO Motor PW	1.00	pcs
25	016802	de: Zyl.-Schrauben M4x25 verz.m.KS DIN 7985	2.00	pcs
30	016553	Hexagon nut M8 with flange and gearing	3.00	pcs
29	016566	Hexagon nut with flange and gearing M6	18.00	pcs
23	032654	Hexagon screw DIN 933 - M8x45 - 8.8 - galvanised for VarioWIN	2.00	pcs
33	031545	Hexagon screw M5x12 DIN 7500 (not ilustrated)	3.00	pcs

Fire protection slider 2 (A000175)

Item no.	Article no.	Description	Quantity	Unit
24	017051	Hexagon screw M6x12 DIN 933 (not illustrated)	2.00	pcs
34	031549	Hexagon screw M6x12 DIN 7500	2.00	pcs
26	016712	Hexagon screw M10x35, DIN 933 for BioWIN XL 35-60	4.00	pcs
5	033112	Setscrew M8x10 DIN916	1.00	pcs
4	012561	Shake-out motor	1.00	pcs
7	007222	Spur gear M1,5; Z21	1.00	pcs
22	024767	Washer DIN 125 - M8 - galvanised, ISO 7089 for VarioWIN, BioWIN 10-26, BioWIN XL 35-60, EasyWIN Premium 180	2.00	pcs

Handover block pneumatic (A000168)

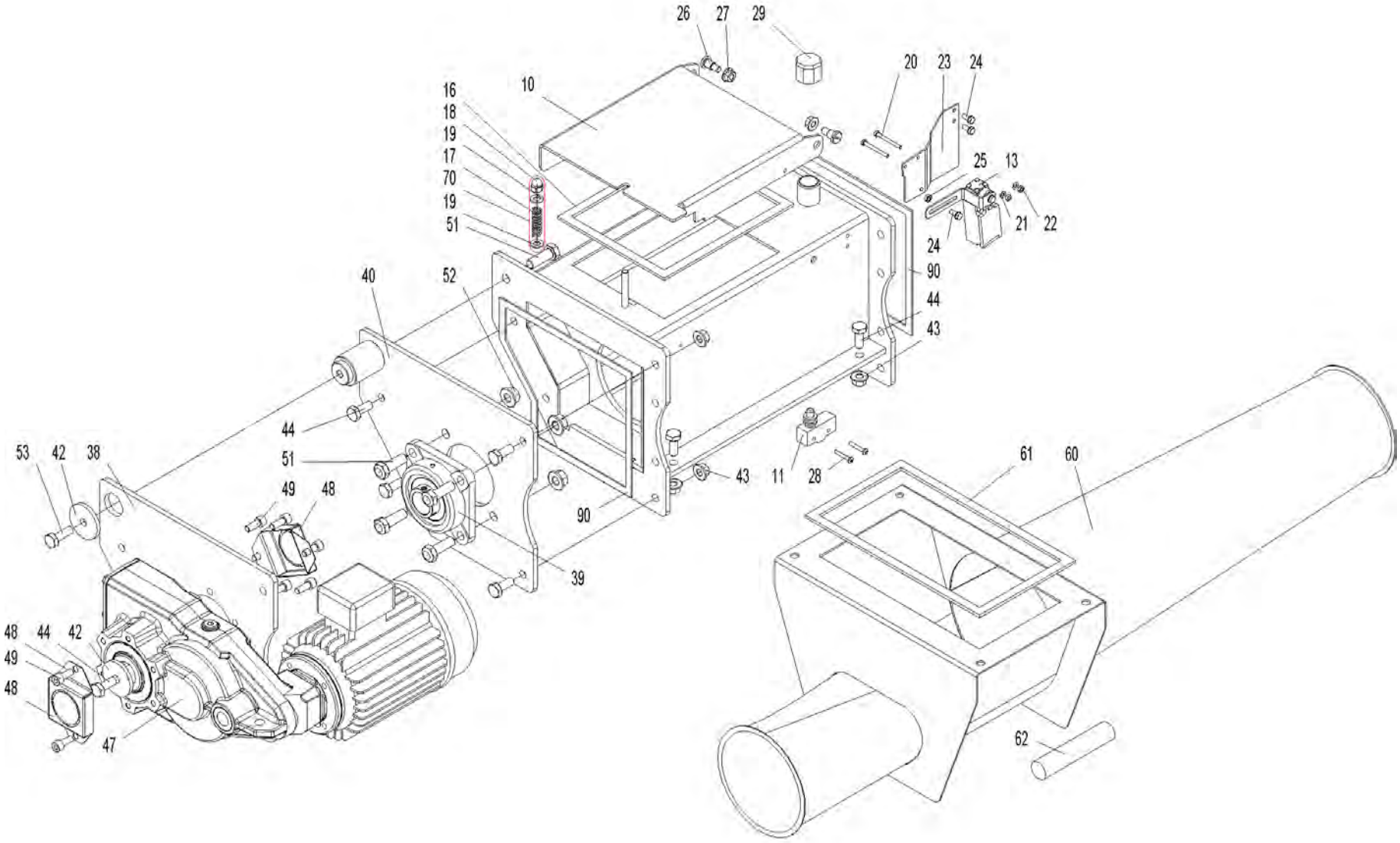

Handover block pneumatic (A000168)

Item no.	Article no.	Description	Quantity	Unit
29	006165	Cap Nr. 301, 3/4" black	1.00	pcs
18	025968	Cap nut M6	1.00	pcs
48	053432	de: Berührungsschutz Motorwelle PW	3.00	pcs
10	051968	de: Deckel ES PW	1.00	pcs
16	054528	de: Dichtung Deckel Übergabe PW	1.00	pcs
61	054557	de: Dichtung Saugbox	1.00	pcs
90	054793	de: Dichtungsband 10x2 Ersatzteil 2,25 Meter	1.00	pcs
70	054499	de: Druckfeder kpl. Übergabeeinheit EX u. PX, PW	1.00	pcs
17	052351	de: Druckfeder Ø10x 40x Ø1,5 PW	1.00	pcs
26	051975	de: Flachkopfschraube mit Schlitz und Ansatz M8x10, chromatiert	2.00	pcs
39	052859	de: Flanschlager mit Berührungsschutz Ø30 Bauhöhe 40,2; 4-Loch; UCF 206 FYH (staubdcht)	1.00	pcs
3	051963	de: Flanschplatte 01 ES PW	2.00	pcs
84	054405	de: Kabel Microschalter Schacht PuroWIN	1.00	pcs
85	053370	de: Kabel Nr. 165 Microschalter Schacht PuroWIN	1.00	pcs
82	054406	de: Kabel Schutztürschalter Schacht PuroWIN-Erweiterung	1.00	pcs
83	053369	de: Kabel Schutztürschalter Schacht PW	1.00	pcs
62	054057	de: Modellbrennstoff 25x120	1.00	pcs
38	052346	de: Motorflansch RW Typ A PW	2.00	pcs
40	053094	de: Motorflansch RW TYP B ge.	1.00	pcs
22	016578	de: Mutter DIN 934 - M4 - 8 - verzinkt	3.00	pcs
60	052921	de: PW94 Saugbox zu Zuführung pneumatisch	1.00	pcs
47	054846	de: Rührwerk mit Flansch RAS PuroWIN PNEUMATISCH	1.00	pcs

Handover block pneumatic (A000168)

Item no.	Article no.	Description	Quantity	Unit
21	031712	de: Scheibe ISO 7089 - 4 - A2	2.00	pcs
19	031713	de: Scheibe ISO 7089 - 6 - A2	2.00	pcs
13	052024	de: Schutztürschalter D4NH-1 Omron PW	1.00	pcs
44	033538	de: Sechskantschraube DIN 933 - M10x25- 8.8-verzinkt - beschichtet mit Gleitlack bc2571 (bis 600°C)	10.00	pcs
53	054269	de: Sechskantschraube DIN 933 - M10x30 - 8.8 - verzinkt	4.00	pcs
51	017867	de: Sechskantschraube DIN 933 - M12x35 - 8.8 - verzinkt	4.00	pcs
52	016569	de: Sperrzahnmutter M12 verzinkt (ähnlich DIN6923 8)	4.00	pcs
81	054264	de: STW 88°C mit Kabel PW	1.00	pcs
42	051940	de: U-Scheibe 10x48x5 PW	3.00	pcs
23	052025	de: Unterlage Schalter PW	1.00	pcs
28	016802	de: Zyl.-Schrauben M4x25 verz.m.KS DIN 7985	2.00	pcs
49	053834	de: Zylinderschraube m. Innensechskant M8 x 20 - A4	11.00	pcs
25	016586	Hexagon nut M5 DIN 934	1.00	pcs
27	016553	Hexagon nut M8 with flange and gearing	2.00	pcs
43	016567	Hexagon nut M10 with flange and gearing (not illustrated)	8.00	pcs
20	016752	Hexagon screw DIN 933 - M4x40 - 8.8 - galvanised for VarioWIN	2.00	pcs
24	031545	Hexagon screw M5x12 DIN 7500 (not ilustrated)	3.00	pcs
11	007128	Microswitch Z-15GQ-B for LogWIN Premium 180-505, BioWIN XL 35-60	1.00	pcs

Leaf spring (A000183)

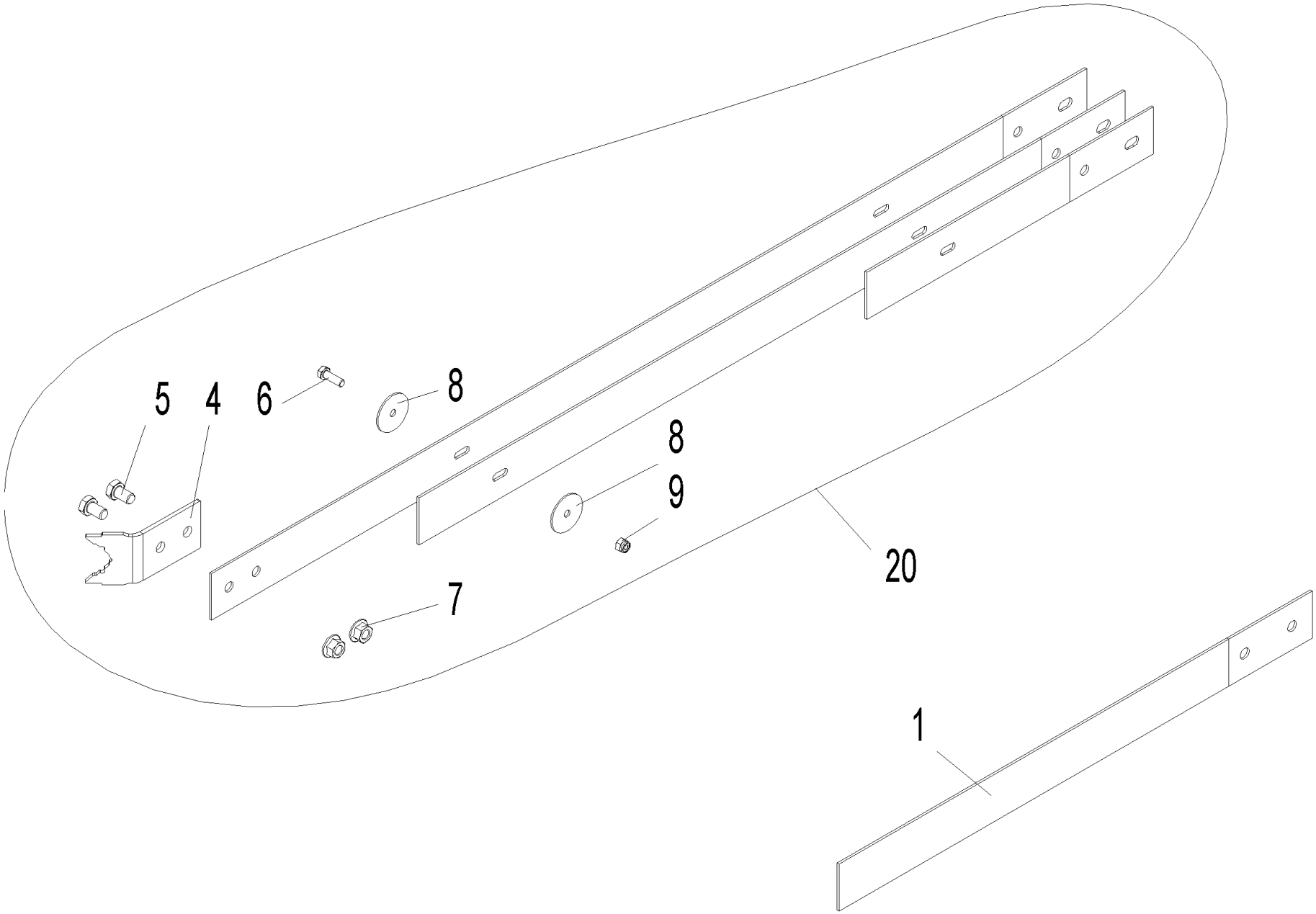

Leaf spring (A000183)

Item no.	Article no.	Description	Quantity	Unit
4	054058	de: Kralle Blattfeder PW	2.00	pcs
1	054265	de: PW00 Ausräumfeder Rührwerk zu Austragung Zuführung direkt/pneumatisch	1.00	pcs
20	053012	de: PW39 Blattfeder 60mm für Rührwerk Ø1500mm zu Austragung DIREKT / PNEUMATISCH	2.00	pcs
20	053013	de: PW41 Blattfeder 60mm für Rührwerk Ø2000mm zu Austragung DIREKT / PNEUMATISCH	2.00	pcs
20	053014	de: PW42 Blattfeder 60mm für Rührwerk Ø2500mm zu Austragung DIREKT / PNEUMATISCH	2.00	pcs
20	053015	de: PW43 Blattfeder 60mm für Rührwerk Ø3000mm zu Austragung DIREKT / PNEUMATISCH	2.00	pcs
20	053016	de: PW44 Blattfeder 60mm für Rührwerk Ø3500mm zu Austragung DIREKT / PNEUMATISCH	2.00	pcs
20	053017	de: PW45 Blattfeder 60mm für Rührwerk Ø4000mm zu Austragung DIREKT / PNEUMATISCH	2.00	pcs
20	053018	de: PW46 Blattfeder 60mm für Rührwerk Ø4500mm zu Austragung DIREKT / PNEUMATISCH	2.00	pcs
20	053019	de: PW47 Blattfeder 60mm für Rührwerk Ø5000mm zu Austragung DIREKT / PNEUMATISCH	2.00	pcs
5	017868	de: Sechskantschraube DIN 933 - M12x20 - 8.8	1.00	pcs
9	016729	de: Sicherungsmutter DIN 985 - M 8 - 8 - verzinkt	1.00	pcs
7	016569	de: Sperrzahnmutter M12 verzinkt (ähnlich DIN6923 8)	1.00	pcs
8	055404	de: U-Scheibe Blattfeder	1.00	pcs
6	017191	Hexagon screw M8x25 DIN 933	1.00	pcs

Masonry feed-through (A000177)

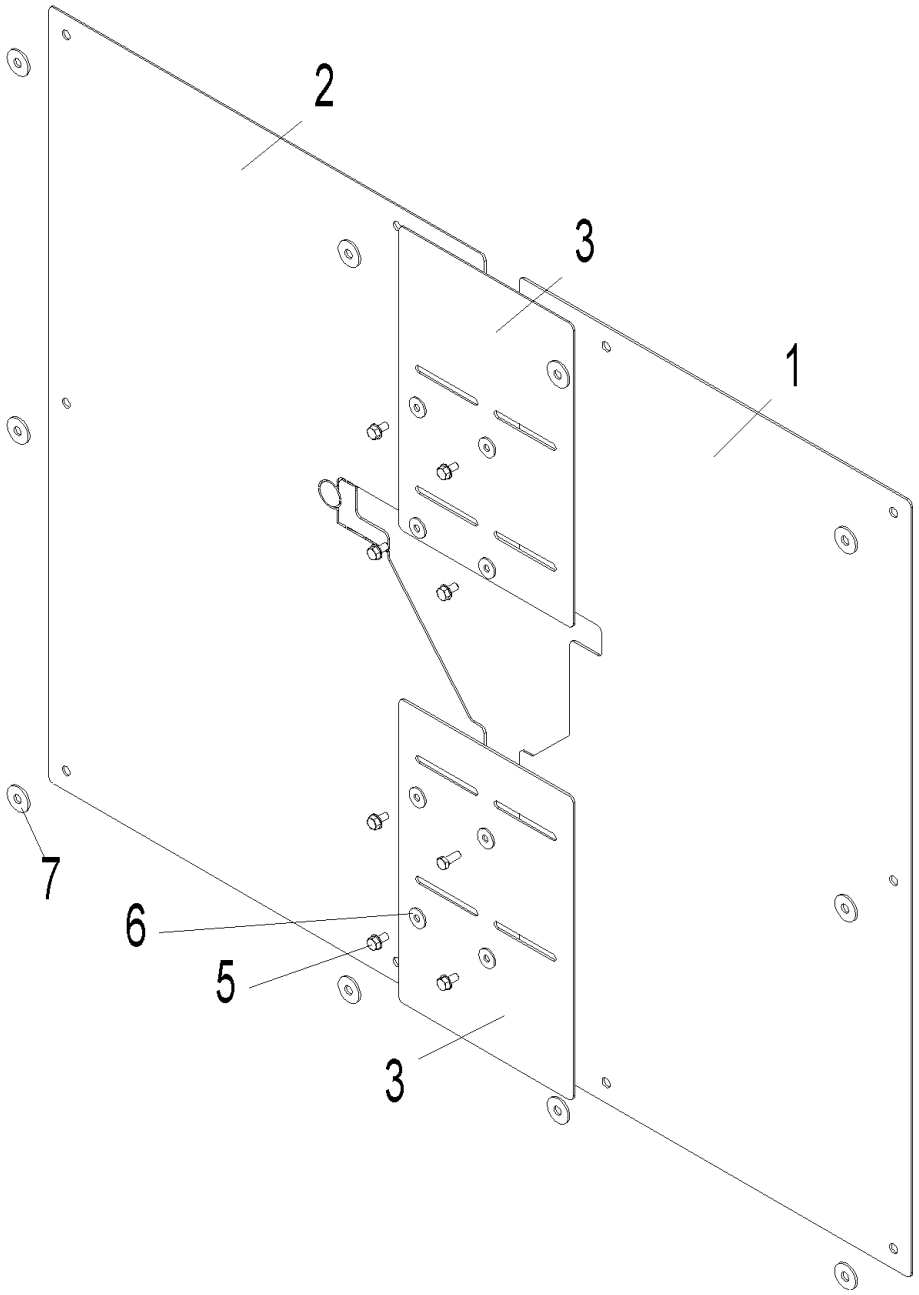

Masonry feed-through (A000177)

Item no.	Article no.	Description	Quantity	Unit
2	054050	de: Mauerdurchführung links PW	1.00	pcs
3	054052	de: Mauerdurchführung Mitte PW	2.00	pcs
1	054051	de: Mauerdurchführung rechts PW	1.00	pcs
6	031753	Disc 6 ISO 7093	8.00	pcs
7	031755	Disc 8 ISO 7093	10.00	pcs
4	024759	Hexagon screw DIN 933 - M6x16 - 8.8 - galvanised for VarioWIN	1.00	pcs
5	031549	Hexagon screw M6x12 DIN 7500	7.00	pcs

Stoker screw (A000166)

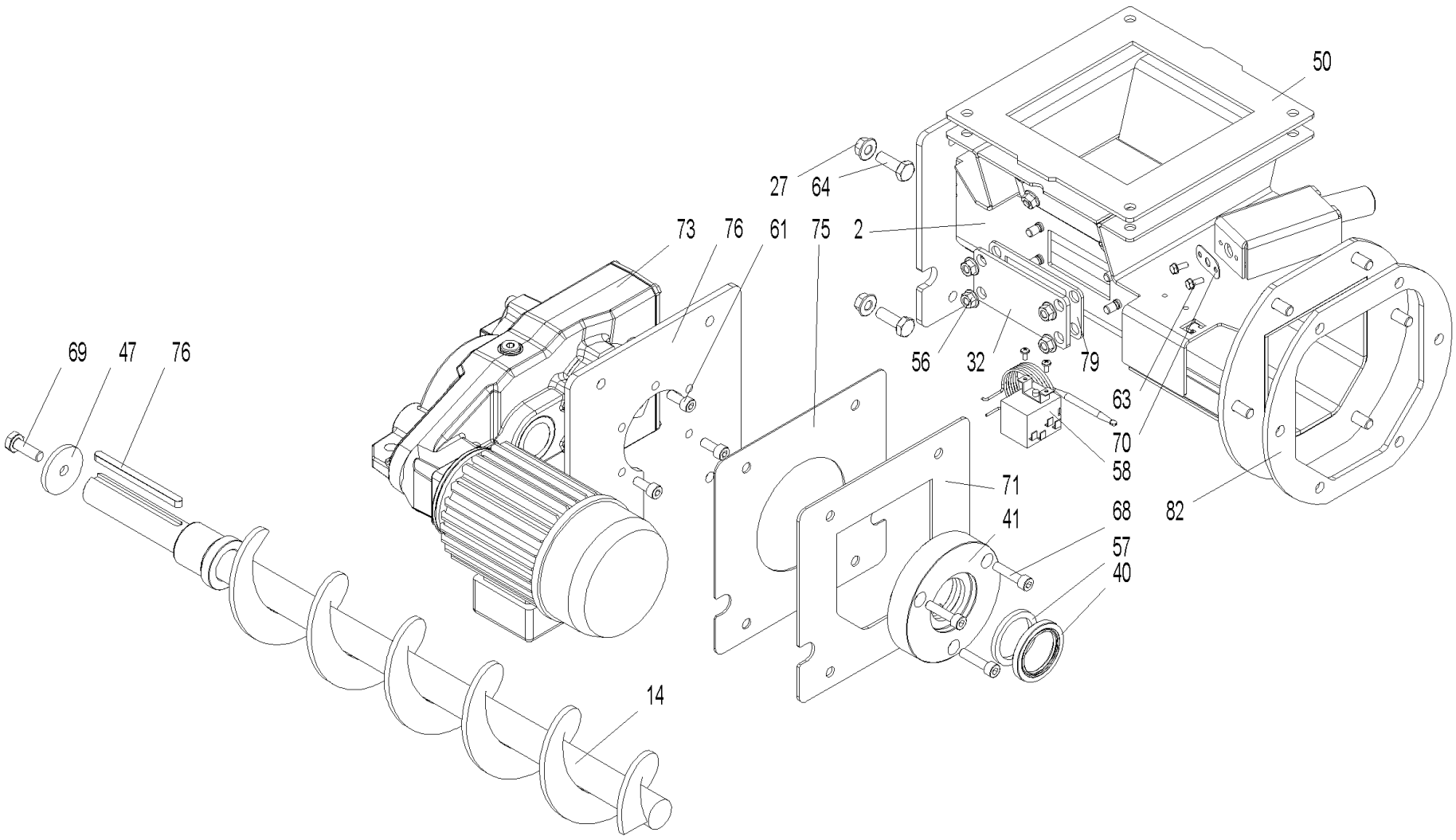

Stoker screw (A000166)

Item no.	Article no.	Description	Quantity	Unit
70	052003	de: Blende A Spülluft PW	1.00	pcs
75	053099	de: Dichtplatte Staub-Auslass	1.00	pcs
82	052095	de: Dichtung Schneckenrohr für Hackgut D238/D205x6 Material C-4400 (Klingersil)	1.00	pcs
71	053428	de: Dichtung Stoker, Erdalkalisilikatfaser PW	1.00	pcs
79	054268	de: Dichtung Wartung Stoker PW	1.00	pcs
14	051469	de: Dosierschnecke kpl. PW	1.00	pcs
57	052858	de: Filzring 42 DIN5419 F2 (54x42x5) PW	1.00	pcs
73	051956	de: Getriebemotor 0,25 kW, 7,9 UPM, Hohlwelle Ø30	2.00	pcs
41	052800	de: Lagerabdeckung 02 PW	1.00	pcs
74	051990	de: Passfeder A8x7x110, DIN 6885 A	1.00	pcs
50	052327	de: Plattendichtung 240 PW	1.00	pcs
2	051945	de: Schneckenrohr kpl. PW	1.00	pcs
64	054269	de: Sechskantschraube DIN 933 - M10x30 - 8.8 - verzinkt	14.00	pcs
47	051940	de: U-Scheibe 10x48x5 PW	2.00	pcs
32	053134	de: Wartungsdeckel kpl. Stoker PW	2.00	pcs
58	005673	de: Wächterthermostat (Typ 602031,Schaltpunkt 88°) VW, PW	1.00	pcs
40	053103	de: Wellendichtring DIN 3760AS AD60 ID42 Höhe 7, NBR, PW	1.00	pcs
76	051951	de: Zentrierflansch Motor Typ K	1.00	pcs
68	053095	de: Zylinderschraube m. Innensechskant ISO 4762 - M 8 x 35 - 8.8 - verzinkt (DIN 912)	3.00	pcs
61	053834	de: Zylinderschraube m. Innensechskant M8 x 20 - A4	5.00	pcs
999	501012	FK-060 Thermal process safeguard	1.00	pcs
56	016553	Hexagon nut M8 with flange and gearing	11.00	pcs

Stoker screw (A000166)

Item no.	Article no.	Description	Quantity	Unit
27	016567	Hexagon nut M10 with flange and gearing (not illustrated)	14.00	pcs
63	031545	Hexagon screw M5x12 DIN 7500 (not ilustrated)	4.00	pcs

BW_ 100 (BioWIN00+BW_100)

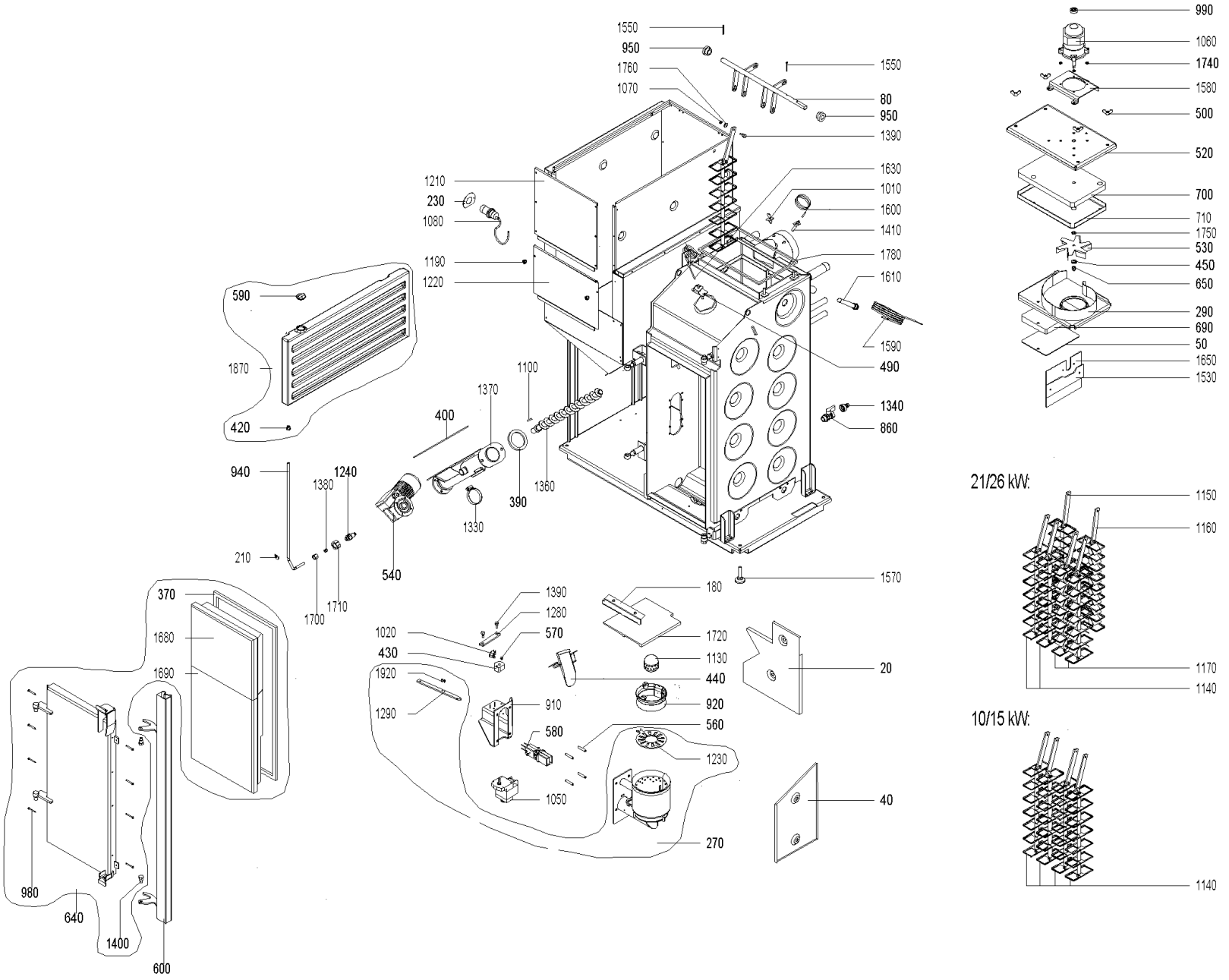

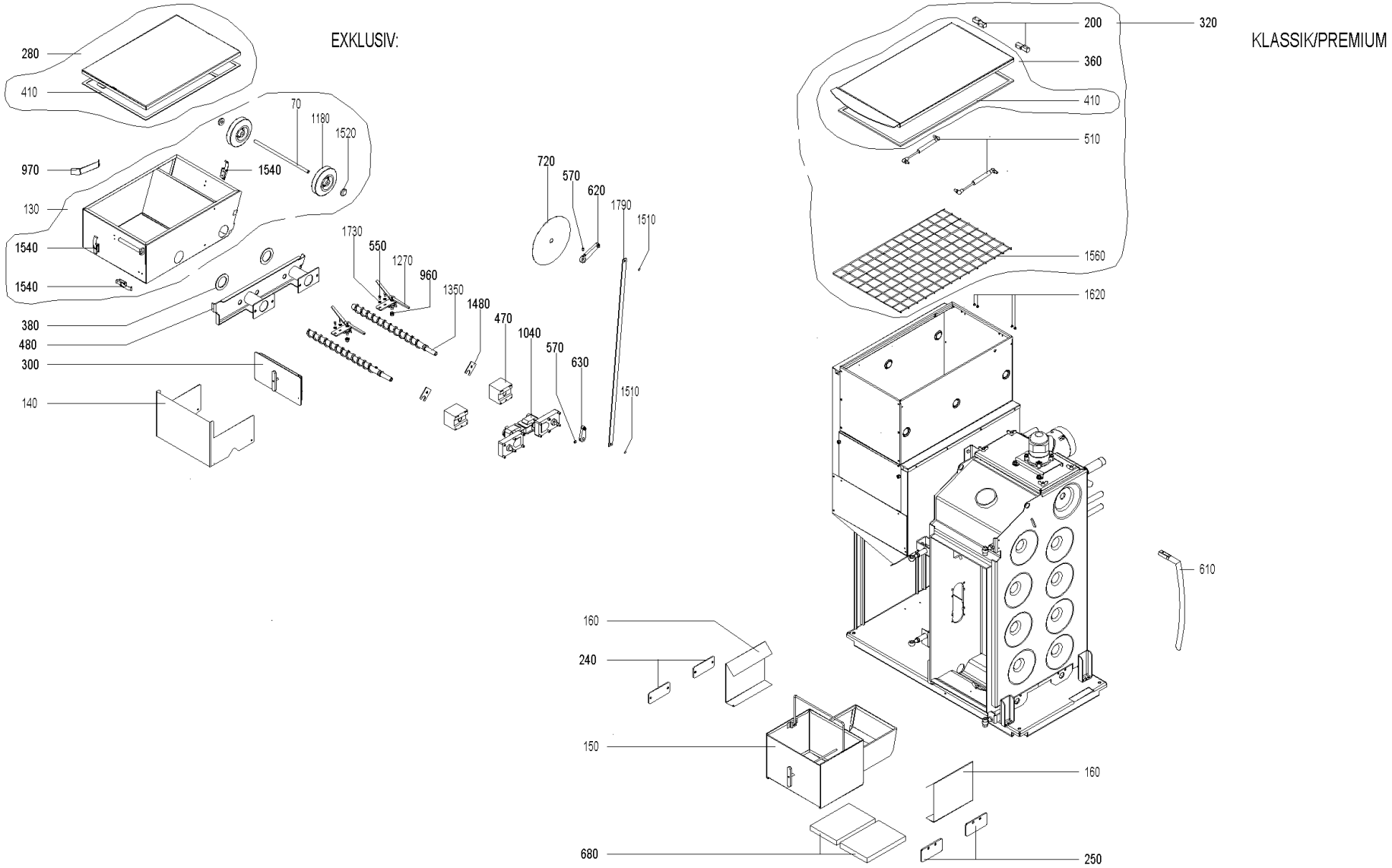
EXKLUSIV:
280
410
70
1180
1520
970
1540
130
1540
1540
380
480
300
140
720
570
620
1790
1510
1730
550
1270
960
1350
1480
470
1040
570
630
1510
KLASSIK/PREMIUM
200
320
360
410
510
1560
1620
610
160
240
150
160
680
250

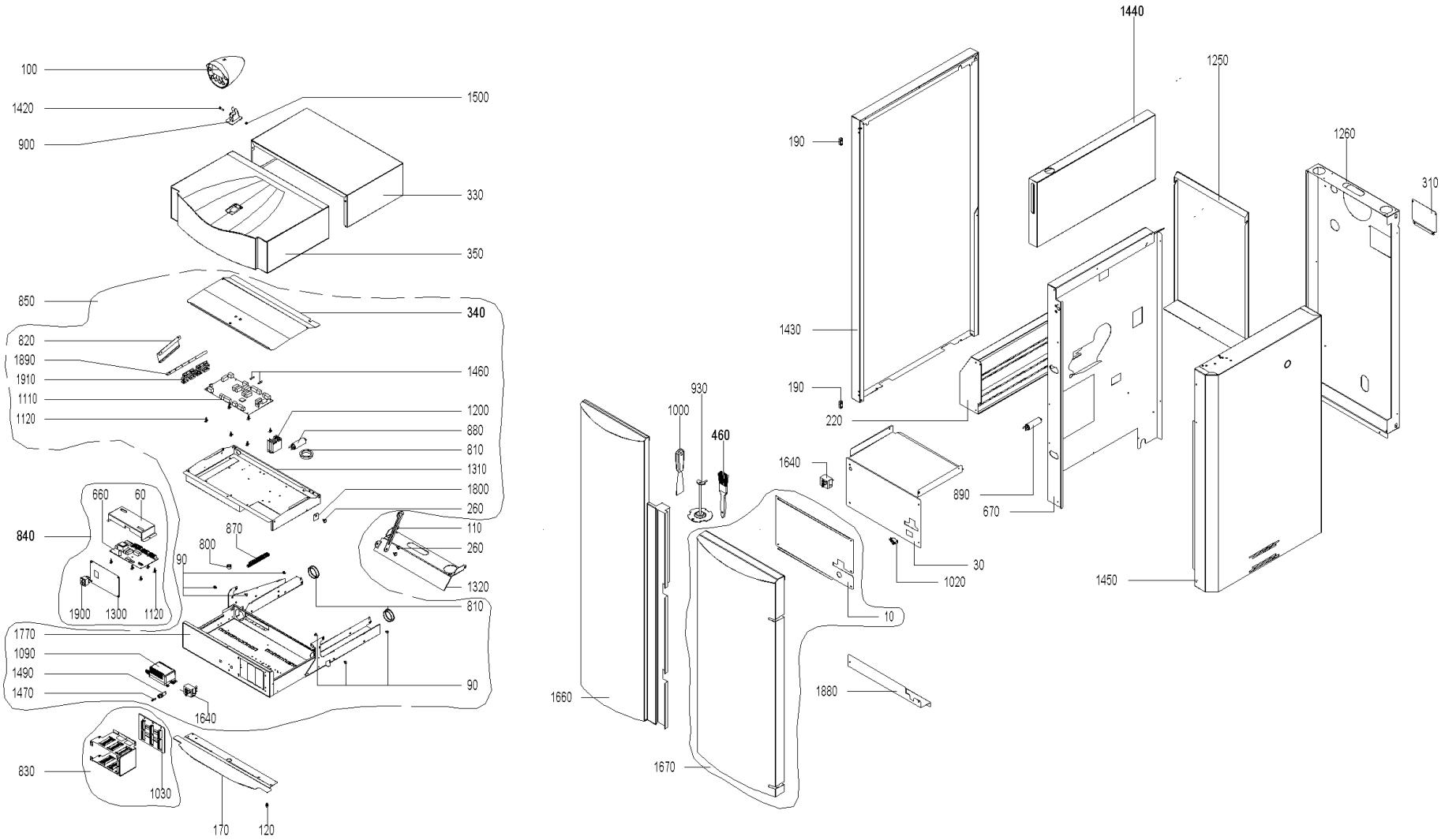
100
1420
900
1500
330
350
850
340
820
1890
1910
1110
1120
1460
1200
880
810
1310
1800
260
110
260
1320
810
660
60
840
870
800
90
1900
1300
1120
1770
1090
1490
1470
1640
90
830
1030
170
120
1440
1250
1260
310
190
1430
190
220
930
1000
460
1640
890
670
30
1020
10
1880
1660
1670
1450

BW_ 100 (BioWIN00+BW_100)

Item no.	Article no.	Description	Quantity	Unit
1470	003228	6.3A fuse (not illustrated)	1.00	pcs
1020	009277	Air control microswitch	1.00	pcs
970	043529	Ash container baffle plate for BioWIN10-26 - Only BioWIN Exklusiv -	1.00	pcs
280	044682	Ash container cover with seal for BioWIN 10-26 - Only BioWIN Exklusiv -	1.00	pcs
130	003080	Ash container cpl. assembled (incl. Cover) for BioWIN 10-26 - Only BioWIN Exklusiv -	1.00	pcs
135	003080	Ash container cpl. assembled (incl. Cover) for BioWIN 10-26 - Only BioWIN Exklusiv -	1.00	pcs
480	045224	Ash container flange, complete painted grey+ seals for BioWIN 10-26 - Only BioWIN Exklusiv -	1.00	pcs
960	006745	Ash conveyor bearing bush	1.00	pcs
380	006843	Ash conveyor seal Ø72x48,3x2mm PMX,BioWIN	1.00	pcs
150	043489	Ash pan complete for BioWIN 10-26 - Only BioWIN Klassik/Premium -	1.00	pcs
140	043325	Ash plate for BioWIN 10-26 - Only BioWIN Exklusiv -	1.00	pcs
1480	043748	Ash removal auger locking plate for BioWIN 10-26 - Only BioWIN Exklusiv -	1.00	pcs
470	044680	Ash removal flange, complete with bearing bushes for BioWIN 10-26 (Only BioWIN Exklusiv), BioWIN XL 35-60	2.00	pcs
1360	041139	Auger, complete for pellets for PMX, BioWIN 10-26	1.00	pcs
1350	043534	Auger for ash removal for BioWIN 10-26 - Only BioWIN Exklusiv -	2.00	pcs
390	006841	Auger tube/boiler seal for PMX, BioWIN 10-26	1.00	pcs
400	006842	Auger tube/reserve supply container seal 178x178x3mm for PMX, BioWIN 10-26, BioWIN XL35-60	1.00	pcs
630	044212	Automatic heating surface cleaning bottom lever, complete for BioWIN 10-26 - Only BioWIN Exklusiv -	1.00	pcs
1790	043460	Automatic heating surface cleaning connection for BioWIN 10-26	1.00	pcs
620	043819	Automatic heating surface cleaning top lever, complete for BioWIN10-26 - Only BioWIN	1.00	pcs

Item no.	Article no.	Description	Quantity	Unit
		Exklusiv -		
70	043523	Axis ash container for BioWIN 10-26 (Only BioWIN Exklusiv), BioWIN XL 35-60	1.00	pcs
80	043771	Axis heating surface cleaning complete - This part is used as spare parts for all types ! - for BioWIN10-26 (except 10/15E)	1.00	pcs
1720	006850	Baffle plate for PMX, BioWIN 10-26	1.00	pcs
190	044677	Bands 96-140 (hinge for left door) with fastening screw for BioWIN 10-26, BioWIN XL 35-60	1.00	pcs
950	006758	Bearing for heating surface cleaning for PMX, BioWIN 10-26	1.00	pcs
965	007125	Bearing for vibrating drive	2.00	pcs
320	503301	BIO039 lid for hopper for BioWIN 10-26 - Only BioWIN Klassik,Exklusiv S -	1.00	pcs
240	041717	Blind flange for ash removal for PMX, BioWIN10-26 - Only BioWIN Klassik/Premium -	1.00	pcs
690	006916	Blower box insulating stone 190 x 139 x 25 SN450 for PMX21/26,BioWIN10-26	1.00	pcs
520	040882	Blower cover for PMX, BioWIN 10-26	1.00	pcs
530	040875	Blower wheel Ø140 for PMX 15, BioWIN10/15, FireWIN to batch 9, VarioWIN	1.00	pcs
850	046125	Boiler control panel BioWIN 10-26 from lot 30	1.00	pcs
260	033091	Bolt DIN 1445 - 8h11 x 4 x 10 - St - galvanised for VarioWIN, FireWIN, BioWIN 10-26, BioWIN XL 35-60	1.00	pcs
1690	006805	Bottom door insulating stone 450 x 346 x 80 for BioWIN 10-26	1.00	pcs
1220	043292	Bottom reserve supply container inspection cover for BioWIN10-26	1.00	pcs
1880	043970	Bracket for bottom insulation for BioWIN10-26	1.00	pcs
1240	042510	Burn-back protection completely assembled for PMX, BioWIN 10-26	1.00	pcs
270	044232	Burner complett for BioWIN 10/15 to lot 29	1.00	pcs
785	053643	Cable - ignition element for BW1, BW2, FireWIN and VarioWIN	1.00	pcs
800	009542	Cable feed-through	1.00	pcs

BW_ 100 (BioWIN00+BW_100)

Item no.	Article no.	Description	Quantity	Unit
810	004096	Cable feed-through 2400 black Ø50	1.00	pcs
770	044659	Cable for auger motor for BioWIN 10-26	1.00	pcs
780	044358	Cable for ignition for BioWIN 10-26	1.00	pcs
750	044359	Cable for motor for heating surface cleaning and ash removal for BioWIN 10-26 - Only BioWIN Klassik -	1.00	pcs
740	045967	Cable for motor shake-out for BioWIN 10-26 from batch 30	1.00	pcs
760	044357	Cable for shaking (012512 Fa. Crouzet) for BioWIN 10-26	1.00	pcs
830	046130	Cable harness for MES control, new ET for BioWIN 10-26, BioWIN XL 35-60	1.00	pcs
840	044671	Cable harness for REG standard control for BioWIN 10-26	1.00	pcs
830	047123	Cable harness MES PLUS BioWIN	1.00	pcs
820	044654	Cable holding plate RAL 7021 for BioWIN 10-26	1.00	pcs
650	025967	Cap nut DIN 1587 - M8 - 6 - galvanised for FAX, FireWIN, VarioWIN, BioWIN 10-26, EasyWIN Klassik/Premium 180	1.00	pcs
1510	016165	Circlip DIN471 - 8 x 0.8 for BioWIN 10-26 (Only BioWIN Exklusiv), BioWIN XL 35-60	1.00	pcs
1530	042369	Clamping plate for PMX21/26, BioWIN 10-26	1.00	pcs
1140	042016	Clearer flat, complete for PMX, BioWIN 10-26	4.00	pcs
90	016006	Collar screw M4 x 11.8 mm, galvanised for BioWIN 10-26,BioWIN XL 35-60	1.00	pcs
370	043827	Comb. chamber door sealing cord, fibreglass packing 16 x 10 mm x 2.17 m for BioWIN 10-26	1.00	pcs
730	044361	Combustion chamber door switch cable for BioWIN 10-26	1.00	pcs
490	043756	Combustion chamber sensor flange for BioWIN10-26, BioWIN XL 35-60	1.00	pcs
890	007332	Condenser 4µF for auger motor for PMX150,BioWIN10/15,FireWIN,VarioWIN, BioWIN XL 35-60	1.00	pcs
880	007330	Condenser for motor MAB 500V, 3µF for HMX,PMX,SWK,BioWIN10-26,FireWIN,VarioWIN,BioWIN XL 35-60, EasyWIN Premium	1.00	pcs

Item no.	Article no.	Description	Quantity	Unit
		180,LogWIN Premiu		
920	006711	Cone BioWIN 10/15 to lot 29, FireWIN to lot 9	1.00	pcs
930	043803	Cone lifter BioWIN 10/15 to lot 29, FireWIN to lot 9	1.00	pcs
1770	044223	Control panel bottom part complete, coated for BioWINT 10-26, BioWIN XL 35-60	1.00	pcs
340	042998	Control panel cover for BioWIN 10-26, SilvaWIN, BioWIN XL 35-60	1.00	pcs
1320	043437	Control panel fixed part hinge for BioWIN 10-26	1.00	pcs
110	044218	Control panel lock arm for BioWIN10-26	1.00	pcs
1310	043807	Control panel top part for BioWIN 10-26, SWK, BioWIN XL35-60	1.00	pcs
1200	045087	Conversion kit relay	1.00	pcs
940	043458	Copper cable for burn-back protection for BioWIN 10-26	1.00	pcs
60	051690	Cover BUML incl. Sticker	1.00	pcs
300	043477	Cover for bottom coasting surface, complete for BioWIN 10-26 - Only BioWIN Exklusiv -	1.00	pcs
290	040895	Cover for coasting surface for BioWIN10-26, PMX	1.00	pcs
50	042375	Cover for insulating stone/blower box for PMX 210/260, BioWIN 10-26	1.00	pcs
310	041539	Cover for rear wall for PMX, BioWIN 10-26	1.00	pcs
1380	006378	Cutting ring DL8 07-151	1.00	pcs
1935	033531	Cylinder-head screw, hexagon socket ISO 4762 - M6x10 - 8.8 - (DIN 912) for VarioWIN, BioWIN 10-26	1.00	pcs
1940	020117	Cylinder-head screw, hexagon socket ISO 4762 - M12x25 - 8.8 - galva. (DIN 912) for VarioWIN, FireWIN, BioWIN10-26, LogWIN Premium	1.00	pcs
980	016719	Cylinder drilling screw 4.2 x 38 DIN7504	1.00	pcs
1920	033528	Cylinder screw M 4 x 6 - 8.8	1.00	pcs
1930	016780	Cylinder screw M4x12 DIN 7985	2.00	pcs

BW_ 100 (BioWIN00+BW_100)

Item no.	Article no.	Description	Quantity	Unit
100	048075	de: InfoWIN-SET für BioWIN10-26 bis SN: 834999	1.00	pcs
1730	018309	Disc 5 DIN134	1.00	pcs
1760	031753	Disc 6 ISO 7093	1.00	pcs
1620	009993	Disc plug T1A Ø5.7 transparent for BioWIN 10-26	1.00	pcs
440	041027	Down chute for pellets for PMX150, BioWIN 10/15	1.00	pcs
1405	045232	Driving rod, complete for BioWIN10-26 à partir de lot 30 , FireWIn à partir de lot 10, VarioWIN	1.00	pcs
430	006010	Eccentric vibration BioWIN, FireWIN	1.00	pcs
740	044777	End switch cable of grate shakings BioWIN 10-26	1.00	pcs
210	006603	Fastening clamp Ø8, DIN 72571, Typ 604 for BioWIN 10-26	1.00	pcs
1100	006766	Feather key, without tightening DIN6885 A 6x6x28 mm for PMX, BioWIN10-26, FireWIN, VarioWIN, BioWIN XL 35-60	1.00	pcs
420	007074	Feed-through grommet DH 80/115/80 for BioWIN 10-15	1.00	pcs
415	045229	Feed-through seal for lever for BioWIN 10-26 from batch 30	1.00	pcs
10	043884	Filling door cover plate for BioWIN 10-26	1.00	pcs
485	017001	Flanged nut M5 for BioWIN 10-26, BioWIN XL 35-60	1.00	pcs
30	043971	Front boiler cover plate for BioWIN10-26	1.00	pcs
350	044220	Front cover, complete for BioWIN 10-26	1.00	pcs
170	044362	Front support cover for BioWIN 10-26	1.00	pcs
1460	006900	Fuse 1 A T 5x20 ceramic tube	1.00	pcs
1490	003663	Fuse holder	1.00	pcs
510	012600	Gas spring 4534DS 0100 N	2.00	pcs
540	044663	Geared motor for auger 4rpm, pluggable conversion instructions for use are enclosed by PMX15 for BioWIN 10/15	1.00	pcs

BW_ 100 (BioWIN00+BW_100)

Item no.	Article no.	Description	Quantity	Unit
1230	041721	Grate plate top BioWIN 10/15 to lot 29	1.00	pcs
590	007073	Grip plug GPN310 G30 SW for water reservoir for BioWIN 10-26	1.00	pcs
640	044684	Heating door, complete for BioWIN 10-26	1.00	pcs
600	043546	Heating door handle, complete coated red for BioWIN 10-26	1.00	pcs
610	044248	Heating surface cleaning hand lever RAL7021 for BioWIN 10-26 - Only BioWIN Klassik/Premium -	1.00	pcs
720	043929	Heating surface cleaning insulation protection Ø220 x Ø18,2 x 1 galvanised for BioWIN 10-26 - Only BioWIN Exklusiv -	1.00	pcs
1420	016214	Hexagon screw DIN931 M5 x 45, black for BioWIN XL 35-60	1.00	pcs
550	031545	Hexagon screw M5x12 DIN 7500 (not ilustrated)	1.00	pcs
1330	006905	Hose clip 50-70/9 C71 for PMX, BioWIN 10-26	1.00	pcs
1340	004386	Hose grommet, union nut and seal for KFE ball valve for BioWIN 10-26, BioWIN XL 35-60,LogWIN Premium 180-505	1.00	pcs
535	046311	Housing foot InfoWIN cpl. with fastening material for LogWIN Premium 180-505,BioWIN 10-26,SWK-T,BioWIN XL 35-60	1.00	pcs
580	055201	Ignition element BioWIN10-26, FireWIN from lot 15, VarioWIN from lot 15 BioWIN XL, LWK	1.00	pcs
580	053851	Ignition element with cable	1.00	pcs
900	043964	InfoWIN bracket for SilvaWIN,BioWIN	1.00	pcs
95	011985	InfoWINplus HW C4 SW V4.10 BioWIN, LWP, JetWIN, EcoWIN	1.00	pcs
1403	045223	Inner driving rod for BioWIN 10-26 from batch 30, VarioWIN, FireWIN	1.00	pcs
670	043928	Insulating plate for BioWIN 10-26	1.00	pcs
680	006917	Insulating stone for rear floor 225 x 155 x 25 for PMX21/26, BioWIN 10-26 (Only BioWIN Klassik/Premium)	2.00	pcs
700	006770	Insulation for blower cover RBP-9 (313x194x30) for PMX, BioWIN10-26	1.00	pcs

BW_ 100 (BioWIN00+BW_100)

Item no.	Article no.	Description	Quantity	Unit
710	040887	Insulation support for blower cover for PMX, BioWIN 10-26	1.00	pcs
1580	044007	Jet protection plate for blower motor for BioWIN 10-26, SilvaWIN	1.00	pcs
860	004385	KFE cock	1.00	pcs
1190	007655	Knurled nut with through-hole thread M5 SW for VarioWIN, FireWIN,BioWIN10-26	1.00	pcs
160	043493	Left/right ash baffle plate for BioWIN 10-26 - Only BioWIN Klassik/Premium -	1.00	pcs
1660	044238	Left door completely assembled for BioWIN10-26	1.00	pcs
1250	043533	Left rear wall for BioWIN 10-26	1.00	pcs
1430	044235	Left side panel completely assembled, new ET for BioWIN 10-26	1.00	pcs
1570	009990	Leg M10 x 40	1.00	pcs
1875	045216	Limit switch bracket for BioWIN 10-26 from batch 30, VarioWIN, FireWIN	1.00	pcs
1800	043808	Locking arm for control panel for BioWIN 10-26, BioWIN XL 35-60	1.00	pcs
120	016001	Locking screw M5 x 19, galvanised for BioWIN 10-26	1.00	pcs
1500	016728	Locknut M 5, DIN 985, black for BioWIN 10-26, BioWIN XL 35-60	1.00	pcs
990	007304	Magnet, complete, glued for motor for PMX, HMX from lot 24, BioWIN 10-26	1.00	pcs
995	001759	Magnetic lock No. 246.41 for GKW,NBE,GKX,GWX,GTX,PMX,HMX,FireWIN,VarioWIN, BioWIN 10-26	2.00	pcs
1085	041430	Mains connection socket 3-pin for MIRA,ETX,PMX,BioWIN10-26,LogWIN Premium 180-505,EasyWIN Premium 180,BioWIN XL 35-60, FireWIN	1.00	pcs
1010	020035	Measuring hole plug for BioWIN 10-26	1.00	pcs
1600	006820	MES007 Immersion sensor (exhaust gas sensor) Pt 1000 for PMX, FireWIN, VarioWIN, BioWIN 10-26, BioWIN XL 35-60	1.00	pcs
1590	502186	MES009M Immersion sensor	1.00	pcs
1270	043816	Mixer, complete painted grey for BioWIN XL 35-60, BioWIN 10-26 (Only BioWIN Exklusiv)	1.00	pcs
660	051541	Modification set BUML TTL to BUML TTL 2Z	1.00	pcs

BW_ 100 (BioWIN00+BW_100)

Item no.	Article no.	Description	Quantity	Unit
1030	046131	Module connection PCB, new ET for BioWIN10-26, BioWIN XL 35-60	1.00	pcs
1040	044665	Motor	1.00	pcs
1060	044666	Motor for blower, ET new Conversion instructions for use with PMX 15-26 are enclosed! for BioWIN 10-26	1.00	pcs
1070	016596	Nut DIN 934 - M6 - A2 for VarioWIN, FireWIN, BioWIN10-26, BioWIN XL 35-60	1.00	pcs
1610	005452	OK-915 Immersion sleeve (129 mm) No.55501.04 for EKX,OK/E,GWX,KSN,ZHN,OK-915,ETX,SNX,FKX,MIRA,FireWIN,VestoWIN Klassik 170-220,	1.00	pcs
65	046214	Partition plate cover cpl. for BioWIN 10-26	1.00	pcs
1035	046214	Partition plate cover cpl. for BioWIN 10-26	1.00	pcs
1650	042368	Partition plate for PMX21/26,BioWIN10-26	1.00	pcs
1110	012002	PCB, FMP BW2 to SN: 829999	1.00	pcs
1120	007609	PCB holder	1.00	pcs
230	044656	Plate fill level switch for BioWIN 10-26	1.00	pcs
595	002050	Power supply unit 002049 holding plate for VarioWIN, FireWIN, BioWIN 10-26, BioWIN XL 35-60, LogWIN Premium 180-505	1.00	pcs
1090	051645	Power supply unit 12V	1.00	pcs
755	002051	Power supply unit cable FRIWO (primary power line) for VarioWIN, FireWIN, BioWIN 10-26, BioWIN XL 35-60, LogWIN Premium 180-505	1.00	pcs
1130	047774	Primary air pin for BioWIN10-26 FireWIN bis Los9 und PMX 21-26	1.00	pcs
1410	041498	Protective tube for exhaust gas sensor	1.00	pcs
1082	009342	Proximity switch, inductive M8x1 for VarioWIN, FireWIN, BioWIN 10-26	1.00	pcs
1080	007821	Proximity switch EC 3025 NPAPL	1.00	pcs
330	044221	Rear cover, complete silk grey (RAL7044) for BioWIN 10-26	1.00	pcs
20	041250	Rear cover plate for PMX, BioWIN10-26	1.00	pcs

BW_ 100 (BioWIN00+BW_100)

Item no.	Article no.	Description	Quantity	Unit
360	044678	Reserve supply container cover, complete with seal, silk grey for BioWIN 10-26 - Only BioWIN Klassik -	1.00	pcs
1805	045586	Reserve supply container for pellets for BioWIN 10-26	1.00	pcs
250	043752	Right blind flange, for ash removal for BioWIN 10-26 - Only BioWIN Klassik/Premium -	1.00	pcs
40	041251	Right cover plate for PMX, BioWIN 10-26	1.00	pcs
1670	044236	Right door completely assembled for BioWIN 10-26	1.00	pcs
1260	044239	Right rear wall completely assembled for BioWIN 10-26	1.00	pcs
1450	044234	Right side panel completely assembled for BioWIN 10-26	1.00	pcs
1440	044227	Right side panel for reserve supply container for BioWIN10-26	1.00	pcs
1900	005563	Rocker switch SW/GR 0-1	1.00	pcs
1640	046451	Safety thermostat LS1+100/-6, Auger for FireWIN, BioWIN 10-26, BioWIN XL 35-60	1.00	pcs
1400	009219	Screw door handle bearing M12 (WAF17/30) - galvanised for HMX, BioWIN10-26, FireWIN, VarioWIN, EasyWIN Klassik/Premium 180	1.00	pcs
1395	045076	Screw M6 (with U-washer and nut) for heating surface cleaning complete for PMX, BioWIN10-26, FireWIN, VarioWIN	1.00	pcs
1390	006756	Screw M6 for heating surface cleaning for PMX,BioWIN 10-26,FireWIN, BioWIN XL 35-60, LogWIN Premium 180-505	1.00	pcs
1780	048837	Seal	1.00	pcs
380	046455	Seal ash container (2pieces 190xØ10mm) for BioWIN 10-26	1.00	pcs
1370	042679	Sealed auger tube, new ET for PMX, BioWIN 10-26	1.00	pcs
410	000047	Sealing band 12x4mm SK for GMX,GENIO/MultiWIN,XENTA,BioWIN 10-26 (Only BioWIN Klassik), VarioWIN, FireWIN	2.20	m
385	016162	Seal Thermocontrol sensor (temperature sensor), 3/4" (38x27x3mm) for BioWIN 10-26	1.00	pcs
560	016163	Setscrew DIN913 - M8 x 40-A2 for BioWIN 10-26	1.00	pcs

BW_ 100 (BioWIN00+BW_100)

Item no.	Article no.	Description	Quantity	Unit
570	033112	Setscrew M8x10 DIN916	1.00	pcs
1050	012512	Shake-out motor	1.00	pcs
1280	042536	Shaker lever 1 PMX 21/26, BioWIN 10-26, FireWIN	1.00	pcs
1290	042103	Shaker lever 2 PMX21/26,BioWIN10-26	1.00	pcs
910	041734	Shaker motor bracket BioWIN 10-26	1.00	pcs
1915	017048	Shoulder screw M8 10x25 ISO 7379	1.00	pcs
200	044802	Southco hinge	1.00	pcs
1000	009540	Spatula	1.00	pcs
1550	017981	Split pin DIN 94, 4 x 32 galvanised for BioWIN 10-26, VestoWIN Klassik 170-220	1.00	pcs
1540	009546	Spring lock	1.00	pcs
450	017922	Spring washer DIN 127B, M8 galvanised for BioWIN 10-26, EasyWIN Premium 180	1.00	pcs
790	044360	STB auger tube cable for BioWIN 10-26, BioWIN XL 35-60 * not illustrated	1.00	pcs
1560	007239	Steel mesh (galvanised wire mesh 646 x 394 x 4) for BioWIN 10-26 - Only BioWIN Klassik -	1.00	pcs
1910	041914	Strain relief 4X, complete, assembled for ETX/SNX,PSX,GENIO/MultiWIN, SilvaWIN, BioWIN XL, BioWIN10-26, BioWIN XL 35-60	1.00	pcs
1890	044217	Strain relief bracket for SilvaWIN, BioWIN10-26, BioWIN XL 35-60	1.00	pcs
180	041249	Support rail for baffle plate for PMX, BioWIN 10-26	1.00	pcs
1300	044244	Switch panel REG for BioWIN 10-26	1.00	pcs
870	009928	Terminal bar	1.00	pcs
1630	007626	Thermocouple	1.00	pcs
1680	006725	Top door insulating stone 346 x 290.5 x 80 for BioWIN 10-26	1.00	pcs
1210	043291	Top reserve supply container inspection cover for BioWIN10-26	1.00	pcs
220	045207	Touch protection for BioWIN10-26 from batch 30	1.00	pcs

BW_ 100 (BioWIN00+BW_100)

Item no.	Article no.	Description	Quantity	Unit
1710	013749	Union nut 3/8"	1.00	pcs
1700	006351	Union nut ML8 GV	1.00	pcs
1785	007082	Velvet foils 150x20mm, grey, for cover for BioWIN 10-26	1.00	pcs
1860	040925	Wago terminal block 8-pin blue/grey (230 V) pre-assembled for BioWIN 10-26, BioWIN XL 35-60 (*not illustrated)	1.00	pcs
1810	040926	Wago terminal block 11-pin orange (extra-low voltage) pre-assembled for BioWIN 10-26, BioWIN XL 35-60	1.00	pcs
1850	006720	Wago terminal block 261 1-9, 8-pce. Emergency door switch/probe switching for BioWIN, VarioWIN, FireWIN, BioWIN10-26, BioWIN XL 35	1.00	pcs
1830	006719	Wago terminal block 261 6-pce. heating requirement/probe switching for BioWIN 10-26, BioWIN XL 35-60 (*not illustrated)	1.00	pcs
1840	009960	Wago terminal block 261; 8-pin 230V extnd. for VarioWIN, FireWIN, BioWIN10-26, BioWIN XL 35-60 (*not illustrated)	1.00	pcs
1820	009968	Wago terminal block 261; 13-pin orange extra-low voltage (no. 1-13), for VarioWIN, FireWIN, BioWIN 10-26, BioWIN XL 35-60 (*not il	1.00	pcs
1750	024767	Washer DIN 125 - M8 - galvanised, ISO 7089 for VarioWIN, BioWIN 10-26, BioWIN XL 35-60, EasyWIN Premium 180	1.00	pcs
1740	020397	Washer M6, DIN125, polyamide, 6.6 for BioWIN 10-26,BioWIN XL 35-60	1.00	pcs
1520	006889	Washer Ø12	1.00	pcs
1870	007070	Water tank for BioWIN 10-26	1.00	pcs
460	017094	WERL056 Flat brush 1 1/2" NO. 72753 for FireWIN, VarioWIN, BioWIN10-26, BioWIN XL 35-60	1.00	pcs
1180	006888	Wheel AG 125-12	1.00	pcs
500	019415	Wing nut DIN 315 - M8 - brass for FAX, FireWIN, VarioWIN, BioWIN 10, EasyWIN Premium 180	1.00	pcs

Ash conveyor (A000123)

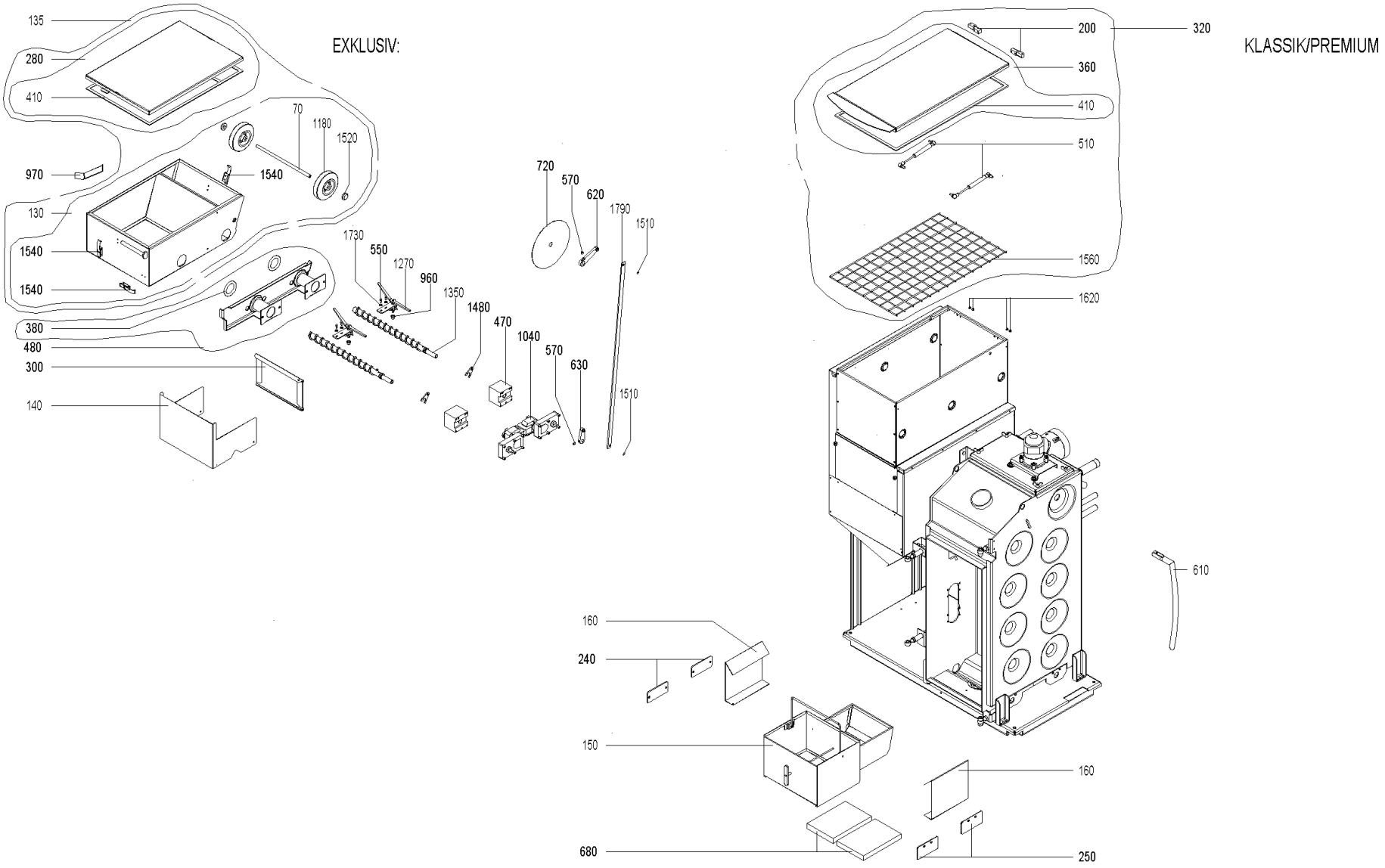

28.10.2016

Ash conveyor (A000123)

Item no.	Article no.	Description	Quantity	Unit
970	043529	Ash container baffle plate for BioWIN10-26 - Only BioWIN Exklusiv -	1.00	pcs
280	044682	Ash container cover with seal for BioWIN 10-26 - Only BioWIN Exklusiv -	1.00	pcs
130	003080	Ash container cpl. assembled (incl. Cover) for BioWIN 10-26 - Only BioWIN Exklusiv -	1.00	pcs
135	003080	Ash container cpl. assembled (incl. Cover) for BioWIN 10-26 - Only BioWIN Exklusiv -	1.00	pcs
480	045224	Ash container flange, complete painted grey+ seals for BioWIN 10-26 - Only BioWIN Exklusiv -	1.00	pcs
960	006745	Ash conveyor bearing bush	1.00	pcs
380	006843	Ash conveyor seal Ø72x48,3x2mm PMX,BioWIN	1.00	pcs
150	043489	Ash pan complete for BioWIN 10-26 - Only BioWIN Klassik/Premium -	1.00	pcs
140	043325	Ash plate for BioWIN 10-26 - Only BioWIN Exklusiv -	1.00	pcs
1480	043748	Ash removal auger locking plate for BioWIN 10-26 - Only BioWIN Exklusiv -	1.00	pcs
470	044680	Ash removal flange, complete with bearing bushes for BioWIN 10-26 (Only BioWIN Exklusiv), BioWIN XL 35-60	2.00	pcs
1350	043534	Auger for ash removal for BioWIN 10-26 - Only BioWIN Exklusiv -	2.00	pcs
630	044212	Automatic heating surface cleaning bottom lever, complete for BioWIN 10-26 - Only BioWIN Exklusiv -	1.00	pcs
1790	043460	Automatic heating surface cleaning connection for BioWIN 10-26	1.00	pcs
620	043819	Automatic heating surface cleaning top lever, complete for BioWIN10-26 - Only BioWIN Exklusiv -	1.00	pcs
70	043523	Axis ash container for BioWIN 10-26 (Only BioWIN Exklusiv), BioWIN XL 35-60	1.00	pcs
320	503301	BIO039 lid for hopper for BioWIN 10-26 - Only BioWIN Klassik,Exklusiv S -	1.00	pcs
240	041717	Blind flange for ash removal for PMX, BioWIN10-26 - Only BioWIN Klassik/Premium -	2.00	pcs
1510	016165	Circlip DIN471 - 8 x 0.8 for BioWIN 10-26 (Only BioWIN Exklusiv), BioWIN XL 35-60	1.00	pcs
300	043477	Cover for bottom coasting surface, complete for BioWIN 10-26 - Only BioWIN Exklusiv -	1.00	pcs

Ash conveyor (A000123)

Item no.	Article no.	Description	Quantity	Unit
1730	018309	Disc 5 DIN134	1.00	pcs
1620	009993	Disc plug T1A Ø5.7 transparent for BioWIN 10-26	1.00	pcs
510	012600	Gas spring 4534DS 0100 N	2.00	pcs
610	044248	Heating surface cleaning hand lever RAL7021 for BioWIN 10-26 - Only BioWIN Klassik/Premium -	1.00	pcs
720	043929	Heating surface cleaning insulation protection Ø220 x Ø18,2 x 1 galvanised for BioWIN 10-26 - Only BioWIN Exklusiv -	1.00	pcs
550	031545	Hexagon screw M5x12 DIN 7500 (not ilustrated)	1.00	pcs
680	006917	Insulating stone for rear floor 225 x 155 x 25 for PMX21/26, BioWIN 10-26 (Only BioWIN Klassik/Premium)	2.00	pcs
160	043493	Left/right ash baffle plate for BioWIN 10-26 - Only BioWIN Klassik/Premium -	2.00	pcs
1270	043816	Mixer, complete painted grey for BioWIN XL 35-60, BioWIN 10-26 (Only BioWIN Exklusiv)	1.00	pcs
1040	044665	Motor	1.00	pcs
360	044678	Reserve supply container cover, complete with seal, silk grey for BioWIN 10-26 - Only BioWIN Klassik -	1.00	pcs
250	043752	Right blind flange, for ash removal for BioWIN 10-26 - Only BioWIN Klassik/Premium -	2.00	pcs
380	046455	Seal ash container (2pieces 190xØ10mm) for BioWIN 10-26	1.00	pcs
410	000047	Sealing band 12x4mm SK for GMX,GENIO/MultiWIN,XENTA,BioWIN 10-26 (Only BioWIN Klassik), VarioWIN, FireWIN	2.20	m
570	033112	Setscrew M8x10 DIN916	1.00	pcs
200	044802	Southco hinge	2.00	pcs
1540	009546	Spring lock	1.00	pcs
1560	007239	Steel mesh (galvanised wire mesh 646 x 394 x 4) for BioWIN 10-26 - Only BioWIN Klassik -	1.00	pcs
1520	006889	Washer Ø12	1.00	pcs

Ash conveyor (A000123)

Item no.	Article no.	Description	Quantity	Unit
1180	006888	Wheel AG 125-12	1.00	pcs

Boiler (A000121)

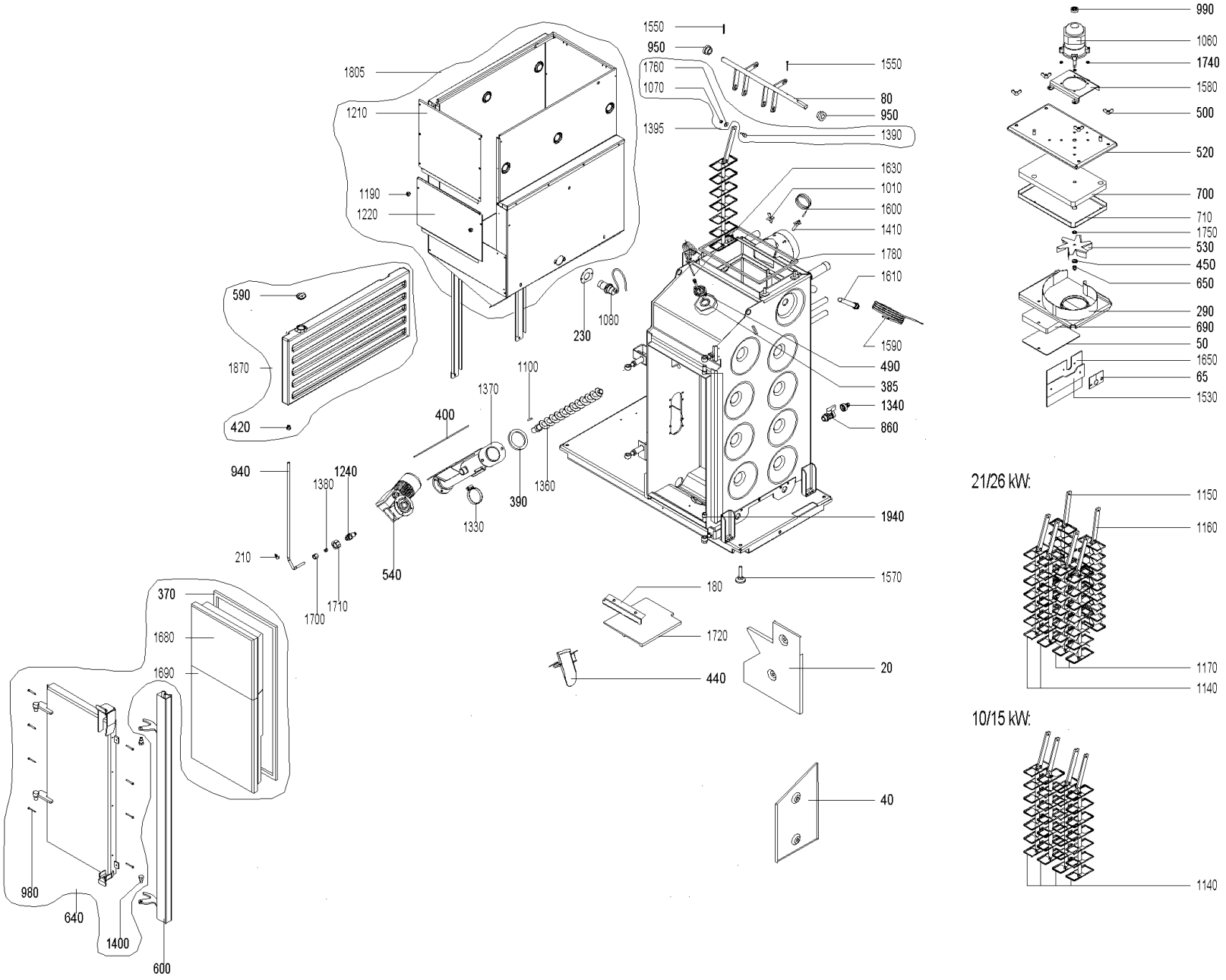

Boiler (A000121)

Item no.	Article no.	Description	Quantity	Unit
1360	041139	Auger, complete for pellets for PMX, BioWIN 10-26	1.00	pcs
390	006841	Auger tube/boiler seal for PMX, BioWIN 10-26	1.00	pcs
400	006842	Auger tube/reserve supply container seal 178x178x3mm for PMX, BioWIN 10-26, BioWIN XL35-60	1.00	pcs
80	043771	Axis heating surface cleaning complete - This part is used as spare parts for all types ! - for BioWIN10-26 (except 10/15E)	1.00	pcs
1720	006850	Baffle plate for PMX, BioWIN 10-26	1.00	pcs
950	006758	Bearing for heating surface cleaning for PMX, BioWIN 10-26	1.00	pcs
690	006916	Blower box insulating stone 190 x 139 x 25 SN450 for PMX21/26,BioWIN10-26	1.00	pcs
520	040882	Blower cover for PMX, BioWIN 10-26	1.00	pcs
530	040875	Blower wheel Ø140 for PMX 15, BioWIN10/15, FireWIN to batch 9, VarioWIN	1.00	pcs
1690	006805	Bottom door insulating stone 450 x 346 x 80 for BioWIN 10-26	1.00	pcs
1220	043292	Bottom reserve supply container inspection cover for BioWIN10-26	1.00	pcs
1240	042510	Burn-back protection completely assembled for PMX, BioWIN 10-26	1.00	pcs
650	025967	Cap nut DIN 1587 - M8 - 6 - galvanised for FAX, FireWIN, VarioWIN, BioWIN 10-26, EasyWIN Klassik/Premium 180	1.00	pcs
1530	042369	Clamping plate for PMX21/26, BioWIN 10-26	1.00	pcs
1140	042016	Clearer flat, complete for PMX, BioWIN 10-26	4.00	pcs
370	043827	Comb. chamber door sealing cord, fibreglass packing 16 x 10 mm x 2.17 m for BioWIN 10-26	1.00	pcs
490	043756	Combustion chamber sensor flange for BioWIN10-26, BioWIN XL 35-60	1.00	pcs
940	043458	Copper cable for burn-back protection for BioWIN 10-26	1.00	pcs
290	040895	Cover for coasting surface for BioWIN10-26, PMX	1.00	pcs
50	042375	Cover for insulating stone/blower box for PMX 210/260, BioWIN 10-26	1.00	pcs

Boiler (A000121)

Item no.	Article no.	Description	Quantity	Unit
1380	006378	Cutting ring DL8 07-151	1.00	pcs
1940	020117	Cylinder-head screw, hexagon socket ISO 4762 - M12x25 - 8.8 - galva. (DIN 912) for VarioWIN, FireWIN, BioWIN10-26, LogWIN Premium	1.00	pcs
980	016719	Cylinder drilling screw 4.2 x 38 DIN7504	1.00	pcs
1760	031753	Disc 6 ISO 7093	1.00	pcs
440	041027	Down chute for pellets for PMX150, BioWIN 10/15	1.00	pcs
210	006603	Fastening clamp Ø8, DIN 72571, Typ 604 for BioWIN 10-26	1.00	pcs
1100	006766	Feather key, without tightening DIN6885 A 6x6x28 mm for PMX, BioWIN10-26, FireWIN, VarioWIN, BioWIN XL 35-60	1.00	pcs
420	007074	Feed-through grommet DH 80/115/80 for BioWIN 10-15	1.00	pcs
540	044663	Geared motor for auger 4rpm, pluggable conversion instructions for use are enclosed by PMX15 for BioWIN 10/15	1.00	pcs
590	007073	Grip plug GPN310 G30 SW for water reservoir for BioWIN 10-26	1.00	pcs
640	044684	Heating door, complete for BioWIN 10-26	1.00	pcs
600	043546	Heating door handle, complete coated red for BioWIN 10-26	1.00	pcs
1330	006905	Hose clip 50-70/9 C71 for PMX, BioWIN 10-26	1.00	pcs
1340	004386	Hose grommet, union nut and seal for KFE ball valve for BioWIN 10-26, BioWIN XL 35-60,LogWIN Premium 180-505	1.00	pcs
700	006770	Insulation for blower cover RBP-9 (313x194x30) for PMX, BioWIN10-26	1.00	pcs
710	040887	Insulation support for blower cover for PMX, BioWIN 10-26	1.00	pcs
1580	044007	Jet protection plate for blower motor for BioWIN 10-26, SilvaWIN	1.00	pcs
860	004385	KFE cock	1.00	pcs
1190	007655	Knurled nut with through-hole thread M5 SW for VarioWIN, FireWIN,BioWIN10-26	1.00	pcs
1570	009990	Leg M10 x 40	4.00	pcs

Boiler (A000121)

Item no.	Article no.	Description	Quantity	Unit
990	007304	Magnet, complete, glued for motor for PMX, HMX from lot 24, BioWIN 10-26	1.00	pcs
1010	020035	Measuring hole plug for BioWIN 10-26	1.00	pcs
1600	006820	MES007 Immersion sensor (exhaust gas sensor) Pt 1000 for PMX, FireWIN, VarioWIN, BioWIN 10-26, BioWIN XL 35-60	1.00	pcs
1590	502186	MES009M Immersion sensor	1.00	pcs
1060	044666	Motor for blower, ET new Conversion instructions for use with PMX 15-26 are enclosed! for BioWIN 10-26	1.00	pcs
1070	016596	Nut DIN 934 - M6 - A2 for VarioWIN, FireWIN, BioWIN10-26, BioWIN XL 35-60	1.00	pcs
1610	005452	OK-915 Immersion sleeve (129 mm) No.55501.04 for EKX,OK/E,GWX,KSN,ZHN,OK-915,ETX,SNX,FKX,MIRA,FireWIN,VestoWIN Klassik 170-220,	1.00	pcs
65	046214	Partition plate cover cpl. for BioWIN 10-26	1.00	pcs
1650	042368	Partition plate for PMX21/26,BioWIN10-26	1.00	pcs
230	044656	Plate fill level switch for BioWIN 10-26	1.00	pcs
1410	041498	Protective tube for exhaust gas sensor	1.00	pcs
1080	007821	Proximity switch EC 3025 NPAPL	1.00	pcs
20	041250	Rear cover plate for PMX, BioWIN10-26	1.00	pcs
1805	045586	Reserve supply container for pellets for BioWIN 10-26	1.00	pcs
40	041251	Right cover plate for PMX, BioWIN 10-26	1.00	pcs
1400	009219	Screw door handle bearing M12 (WAF17/30) - galvanised for HMX, BioWIN10-26, FireWIN, VarioWIN, EasyWIN Klassik/Premium 180	1.00	pcs
1395	045076	Screw M6 (with U-washer and nut) for heating surface cleaning complete for PMX, BioWIN10-26, FireWIN, VarioWIN	1.00	pcs
1390	006756	Screw M6 for heating surface cleaning for PMX,BioWIN 10-26,FireWIN, BioWIN XL 35-60, LogWIN Premium 180-505	1.00	pcs
1780	048837	Seal	1.00	pcs

Boiler (A000121)

Item no.	Article no.	Description	Quantity	Unit
1370	042679	Sealed auger tube, new ET for PMX, BioWIN 10-26	1.00	pcs
385	016162	Seal Thermocontrol sensor (temperature sensor), 3/4" (38x27x3mm) for BioWIN 10-26	1.00	pcs
1550	017981	Split pin DIN 94, 4 x 32 galvanised for BioWIN 10-26, VestoWIN Klassik 170-220	1.00	pcs
450	017922	Spring washer DIN 127B, M8 galvanised for BioWIN 10-26, EasyWIN Premium 180	1.00	pcs
180	041249	Support rail for baffle plate for PMX, BioWIN 10-26	1.00	pcs
1630	007626	Thermocouple	1.00	pcs
1680	006725	Top door insulating stone 346 x 290.5 x 80 for BioWIN 10-26	1.00	pcs
1210	043291	Top reserve supply container inspection cover for BioWIN10-26	1.00	pcs
1710	013749	Union nut 3/8"	1.00	pcs
1700	006351	Union nut ML8 GV	1.00	pcs
1750	024767	Washer DIN 125 - M8 - galvanised, ISO 7089 for VarioWIN, BioWIN 10-26, BioWIN XL 35-60, EasyWIN Premium 180	1.00	pcs
1740	020397	Washer M6, DIN125, polyamide, 6.6 for BioWIN 10-26,BioWIN XL 35-60	1.00	pcs
1870	007070	Water tank for BioWIN 10-26	1.00	pcs
500	019415	Wing nut DIN 315 - M8 - brass for FAX, FireWIN, VarioWIN, BioWIN 10, EasyWIN Premium 180	4.00	pcs

Burner pot (A000125)

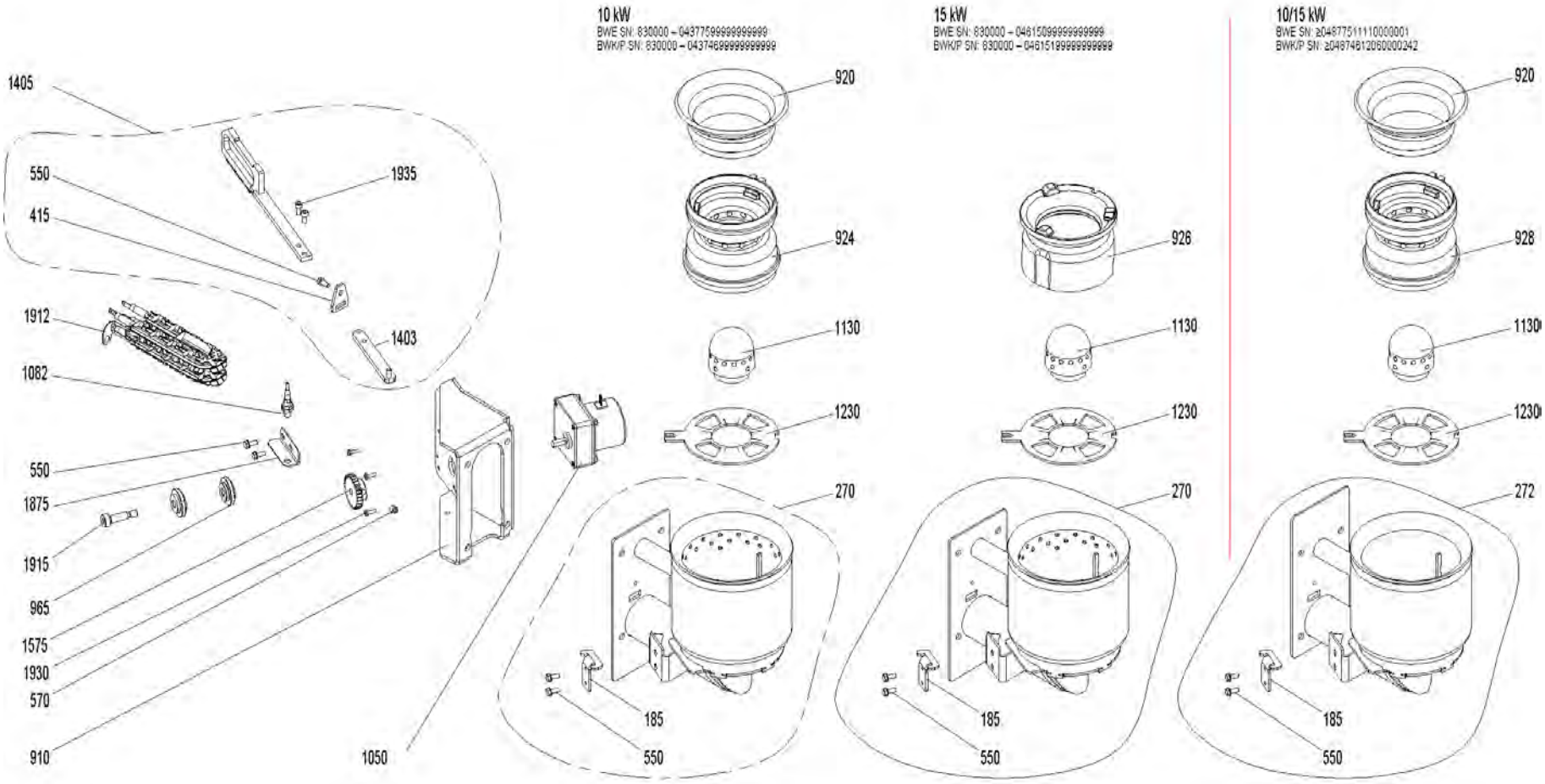

Burner pot (A000125)

Item no.	Article no.	Description	Quantity	Unit
965	007125	Bearing for vibrating drive	2.00	pcs
1880	043970	Bracket for bottom insulation for BioWIN10-26	1.00	pcs
270	046210	Burner, complete for BioWIN 10/15, from batch 30	1.00	pcs
785	053643	Cable - ignition element for BW1, BW2, FireWIN and VarioWIN	1.00	pcs
928	007312	Cone, bottom part - cone Øi=71 - for VarioWIN	1.00	pcs
920	007310	Cone, top part - split cone from batch 30 - for BioWIN10, VarioWIN	1.00	pcs
926	006708	Cone 1.4855 for BioWIN 15 from batch 30, for FireWIN from batch 10	1.00	pcs
924	007309	Cone bottom part Øi=63 - Split cone from batch 30 - for BioWIN 10	1.00	pcs
1935	033531	Cylinder-head screw, hexagon socket ISO 4762 - M6x10 - 8.8 - (DIN 912) for VarioWIN, BioWIN 10-26	1.00	pcs
1930	016780	Cylinder screw M4x12 DIN 7985	2.00	pcs
272	048722	de: Brenner kpl. für BioWIN 10/15; ab Los 30; Doppelkonus	1.00	pcs
1405	045232	Driving rod, complete for BioWIN10-26 à partir de lot 30 , FireWIn à partir de lot 10, VarioWIN	1.00	pcs
185	045919	Driving rod seating bracket for VarioWIN, BioWIN 10-26 from batch 30, FireWIN	1.00	pcs
415	045229	Feed-through seal for lever for BioWIN 10-26 from batch 30	1.00	pcs
1230	045212	Grate plate, top for BioWIN 10/15 from batch 30, FireWIN from batch 10, VarioWIN	1.00	pcs
1050	012530	Grate shaking motor mounted replacement: 012517 for BioWIN10-26, FireWIN, VarioWIN	1.00	pcs
550	031545	Hexagon screw M5x12 DIN 7500 (not ilustrated)	1.00	pcs
1912	055201	Ignition element BioWIN10-26, FireWIN from lot 15, VarioWIN from lot 15 BioWIN XL, LWK	1.00	pcs
1913	053851	Ignition element with cable	1.00	pcs
1403	045223	Inner driving rod for BioWIN 10-26 from batch 30, VarioWIN, FireWIN	1.00	pcs
1875	045216	Limit switch bracket for BioWIN 10-26 from batch 30, VarioWIN, FireWIN	1.00	pcs

Burner pot (A000125)

Item no.	Article no.	Description	Quantity	Unit
1130	007210	Primary air pin	1.00	pcs
1082	009342	Proximity switch, inductive M8x1 for VarioWIN, FireWIN, BioWIN 10-26	1.00	pcs
560	016163	Setscrew DIN913 - M8 x 40-A2 for BioWIN 10-26	1.00	pcs
570	033112	Setscrew M8x10 DIN916	1.00	pcs
910	045215	Shake-out motor bracket for BioWIN 10-26 from batch 30, FireWIN from batch 10, VarioWIN	1.00	pcs
1915	017048	Shoulder screw M8 10x25 ISO 7379	1.00	pcs
1575	047115	Spur gear Z=28; m=1.5, for shake-out drive for FireWIN from batch 10, BioWIN 10/15 from batch 30, VarioWIN	1.00	pcs

Cladding (A000124)

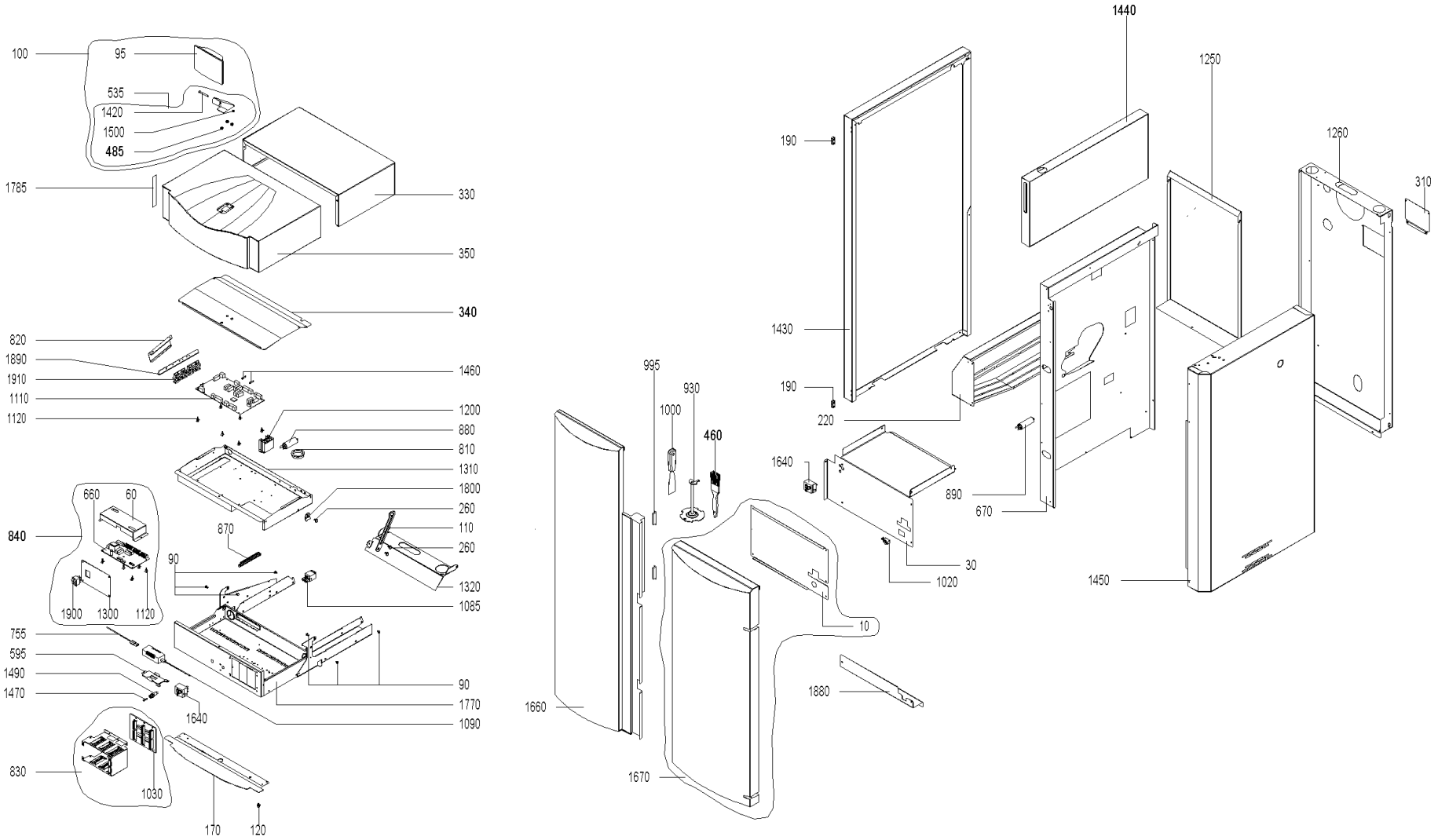

Cladding (A000124)

Item no.	Article no.	Description	Quantity	Unit
1470	003228	6.3A fuse (not illustrated)	1.00	pcs
1020	009277	Air control microswitch	1.00	pcs
190	044677	Bands 96-140 (hinge for left door) with fastening screw for BioWIN 10-26, BioWIN XL 35-60	1.00	pcs
850	046125	Boiler control panel BioWIN 10-26 from lot 30	1.00	pcs
260	033091	Bolt DIN 1445 - 8h11 x 4 x 10 - St - galvanised for VarioWIN, FireWIN, BioWIN 10-26, BioWIN XL 35-60	1.00	pcs
1880	043970	Bracket for bottom insulation for BioWIN10-26	1.00	pcs
785	053643	Cable - ignition element for BW1, BW2, FireWIN and VarioWIN	1.00	pcs
810	004096	Cable feed-through 2400 black Ø50	1.00	pcs
770	044659	Cable for auger motor for BioWIN 10-26	1.00	pcs
780	044358	Cable for ignition for BioWIN 10-26	1.00	pcs
750	044359	Cable for motor for heating surface cleaning and ash removal for BioWIN 10-26 - Only BioWIN Klassik -	1.00	pcs
740	045967	Cable for motor shake-out for BioWIN 10-26 from batch 30	1.00	pcs
760	044357	Cable for shaking (012512 Fa. Crouzet) for BioWIN 10-26	1.00	pcs
830	046130	Cable harness for MES control, new ET for BioWIN 10-26, BioWIN XL 35-60	1.00	pcs
840	044671	Cable harness for REG standard control for BioWIN 10-26	1.00	pcs
830	047123	Cable harness MES PLUS BioWIN	1.00	pcs
820	044654	Cable holding plate RAL 7021 for BioWIN 10-26	1.00	pcs
890	007334	Capacitor 8µF for auger motor, MAB MKP8 for PMX21/26, BioWIN 21/26, BioWIN XL 35-60	1.00	pcs
930	046572	Cleaning tool/cone removal tool for BioWIN21/26	1.00	pcs
930	046570	Cleaning tool / removal device for cone for BioWIN 10 from batch30, VarioWIN	1.00	pcs
90	016006	Collar screw M4 x 11.8 mm, galvanised for BioWIN 10-26,BioWIN XL 35-60	1.00	pcs

Cladding (A000124)

Item no.	Article no.	Description	Quantity	Unit
730	044361	Combustion chamber door switch cable for BioWIN 10-26	1.00	pcs
890	007332	Condenser 4µF for auger motor for PMX150,BioWIN10/15,FireWIN,VarioWIN, BioWIN XL 35-60	1.00	pcs
880	007330	Condenser for motor MAB 500V, 3µF for HMX,PMX,SWK,BioWIN10-26,FireWIN,VarioWIN,BioWIN XL 35-60, EasyWIN Premium 180,LogWIN Premiu	1.00	pcs
930	046571	Cone cleaning tool/removal device for BioWIN 15 from batch 30, FireWIN from batch 10	1.00	pcs
1770	044223	Control panel bottom part complete, coated for BioWINT 10-26, BioWIN XL 35-60	1.00	pcs
340	042998	Control panel cover for BioWIN 10-26, SilvaWIN, BioWIN XL 35-60	1.00	pcs
1320	043437	Control panel fixed part hinge for BioWIN 10-26	1.00	pcs
110	044218	Control panel lock arm for BioWIN10-26	1.00	pcs
1310	043807	Control panel top part for BioWIN 10-26, SWK, BioWIN XL35-60	1.00	pcs
1200	045087	Conversion kit relay	1.00	pcs
60	051690	Cover BUML incl. Sticker	1.00	pcs
310	041539	Cover for rear wall for PMX, BioWIN 10-26	1.00	pcs
100	048075	de: InfoWIN-SET für BioWIN10-26 bis SN: 834999	1.00	pcs
1110	011995	de: Platine Feuerungsautomat FMP-B2 V6.50 BioWIN ab SN: 830001	1.00	pcs
10	043884	Filling door cover plate for BioWIN 10-26	1.00	pcs
485	017001	Flanged nut M5 for BioWIN 10-26, BioWIN XL 35-60	1.00	pcs
30	043971	Front boiler cover plate for BioWIN10-26	1.00	pcs
350	044220	Front cover, complete for BioWIN 10-26	1.00	pcs
170	044362	Front support cover for BioWIN 10-26	1.00	pcs
1460	006900	Fuse 1 A T 5x20 ceramic tube	1.00	pcs
1490	003663	Fuse holder	1.00	pcs

Cladding (A000124)

Item no.	Article no.	Description	Quantity	Unit
1420	016214	Hexagon screw DIN931 M5 x 45, black for BioWIN XL 35-60	1.00	pcs
535	046311	Housing foot InfoWIN cpl. with fastening material for LogWIN Premium 180-505,BioWIN 10-26,SWK-T,BioWIN XL 35-60	1.00	pcs
95	011985	InfoWINplus HW C4 SW V4.10 BioWIN, LWP, JetWIN, EcoWIN	1.00	pcs
670	043928	Insulating plate for BioWIN 10-26	1.00	pcs
1660	044238	Left door completely assembled for BioWIN10-26	1.00	pcs
1250	043533	Left rear wall for BioWIN 10-26	1.00	pcs
1430	044235	Left side panel completely assembled, new ET for BioWIN 10-26	1.00	pcs
1800	043808	Locking arm for control panel for BioWIN 10-26, BioWIN XL 35-60	1.00	pcs
120	016001	Locking screw M5 x 19, galvanised for BioWIN 10-26	1.00	pcs
1500	016728	Locknut M 5, DIN 985, black for BioWIN 10-26, BioWIN XL 35-60	1.00	pcs
995	001759	Magnetic lock No. 246.41 for GKW,NBE,GKX,GWX,GTX,PMX,HMX,FireWIN,VarioWIN, BioWIN 10-26	2.00	pcs
1085	041430	Mains connection socket 3-pin for MIRA,ETX,PMX,BioWIN10-26,LogWIN Premium 180-505,EasyWIN Premium 180,BioWIN XL 35-60, FireWIN	1.00	pcs
660	051541	Modification set BUML TTL to BUML TTL 2Z	1.00	pcs
1030	046131	Module connection PCB, new ET for BioWIN10-26, BioWIN XL 35-60	1.00	pcs
1120	007609	PCB holder	1.00	pcs
755	002059	Power supply cable (not illustrated)	1.00	pcs
595	002050	Power supply unit 002049 holding plate for VarioWIN, FireWIN, BioWIN 10-26, BioWIN XL 35-60, LogWIN Premium 180-505	1.00	pcs
1090	051645	Power supply unit 12V	1.00	pcs
755	002051	Power supply unit cable FRIWO (primary power line) for VarioWIN, FireWIN, BioWIN 10-26, BioWIN XL 35-60, LogWIN Premium 180-505	1.00	pcs

Cladding (A000124)

Item no.	Article no.	Description	Quantity	Unit
330	044221	Rear cover, complete silk grey (RAL7044) for BioWIN 10-26	1.00	pcs
1670	044236	Right door completely assembled for BioWIN 10-26	1.00	pcs
1260	044239	Right rear wall completely assembled for BioWIN 10-26	1.00	pcs
1450	044234	Right side panel completely assembled for BioWIN 10-26	1.00	pcs
1440	044227	Right side panel for reserve supply container for BioWIN10-26	1.00	pcs
1900	005563	Rocker switch SW/GR 0-1	1.00	pcs
1640	046451	Safety thermostat LS1+100/-6, Auger for FireWIN, BioWIN 10-26, BioWIN XL 35-60	1.00	pcs
1000	009540	Spatula	1.00	pcs
790	044360	STB auger tube cable for BioWIN 10-26, BioWIN XL 35-60 * not illustrated	1.00	pcs
1910	041914	Strain relief 4X, complete, assembled for ETX/SNX,PSX,GENIO/MultiWIN, SilvaWIN, BioWIN XL, BioWIN10-26, BioWIN XL 35-60	1.00	pcs
1890	044217	Strain relief bracket for SilvaWIN, BioWIN10-26, BioWIN XL 35-60	1.00	pcs
1300	044244	Switch panel REG for BioWIN 10-26	1.00	pcs
870	009928	Terminal bar	1.00	pcs
220	045207	Touch protection for BioWIN10-26 from batch 30	1.00	pcs
1785	007082	Velvet foils 150x20mm, grey, for cover for BioWIN 10-26	1.00	pcs
1860	040925	Wago terminal block 8-pin blue/grey (230 V) pre-assembled for BioWIN 10-26, BioWIN XL 35-60 (*not illustrated)	1.00	pcs
1810	040926	Wago terminal block 11-pin orange (extra-low voltage) pre-assembled for BioWIN 10-26, BioWIN XL 35-60	1.00	pcs
1850	006720	Wago terminal block 261 1-9, 8-pce. Emergency door switch/probe switching for BioWIN, VarioWIN, FireWIN, BioWIN10-26, BioWIN XL 35	1.00	pcs
1830	006719	Wago terminal block 261 6-pce. heating requirement/probe switching for BioWIN 10-26, BioWIN XL 35-60 (*not illustrated)	1.00	pcs

Cladding (A000124)

Item no.	Article no.	Description	Quantity	Unit
1840	009960	Wago terminal block 261; 8-pin 230V extnd. for VarioWIN, FireWIN, BioWIN10-26, BioWIN XL 35-60 (*not illustrated)	1.00	pcs
1820	009968	Wago terminal block 261; 13-pin orange extra-low voltage (no. 1-13), for VarioWIN, FireWIN, BioWIN 10-26, BioWIN XL 35-60 (*not il	1.00	pcs
460	017094	WERL056 Flat brush 1 1/2" NO. 72753 for FireWIN, VarioWIN, BioWIN10-26, BioWIN XL 35-60	1.00	pcs

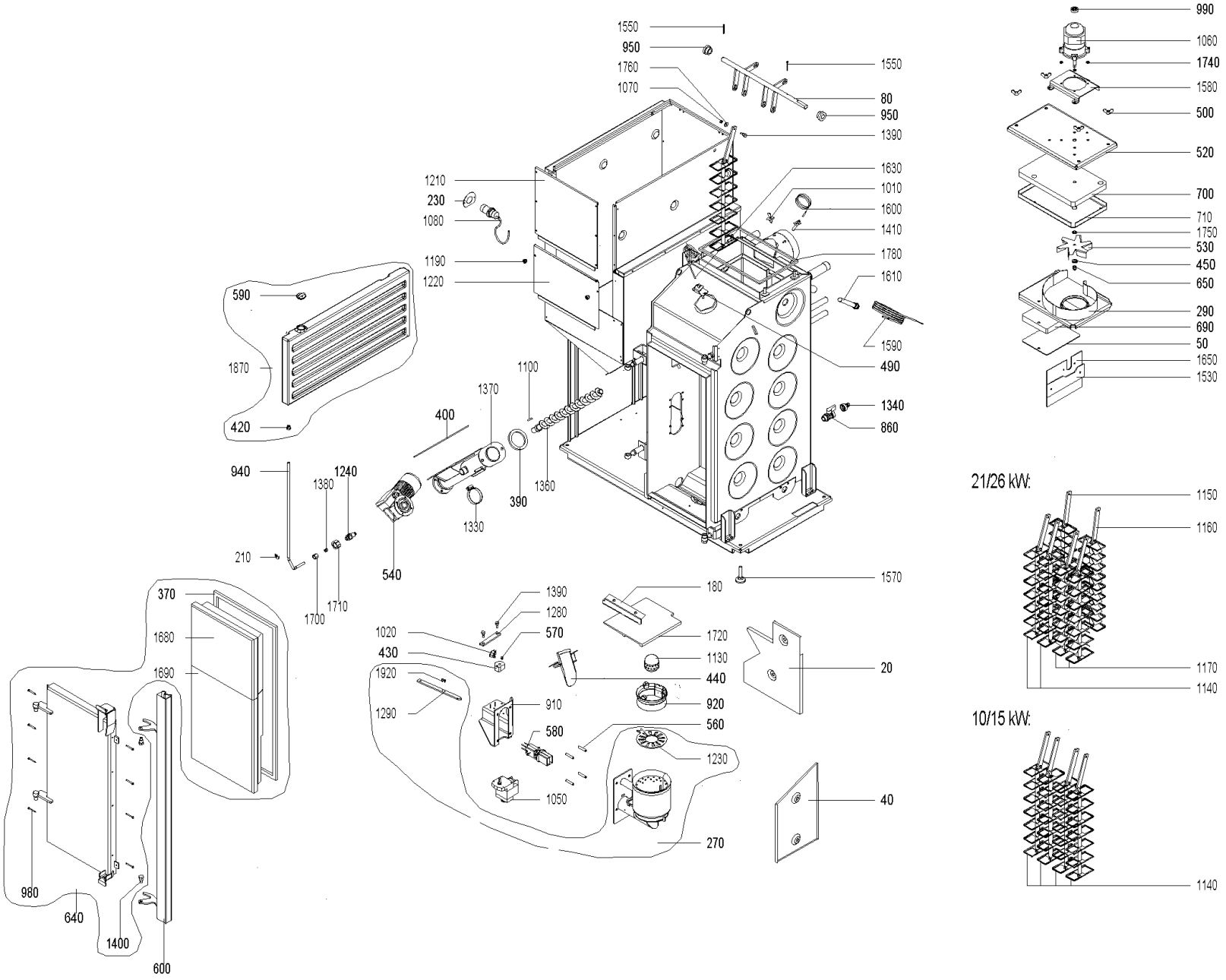
1550
950
1760
1070
1550
80
950
1390
1630
1010
1600
1410
1780
1610
1590
490
1340
860
1210
230
1080
1190
1220
590
1870
420
940
1240
1380
210
1700
1710
400
1370
1100
390
1360
1330
540
1570
180
1720
1130
440
920
560
1230
20
40
270
1390
1280
570
1020
430
1920
1290
910
580
1050
370
1680
1690
980
640
1400
600
990
1060
1740
1580
500
520
700
710
1750
530
450
650
290
690
50
1650
1530
21/26 kW:
1150
1160
1170
1140
10/15 kW:
1140

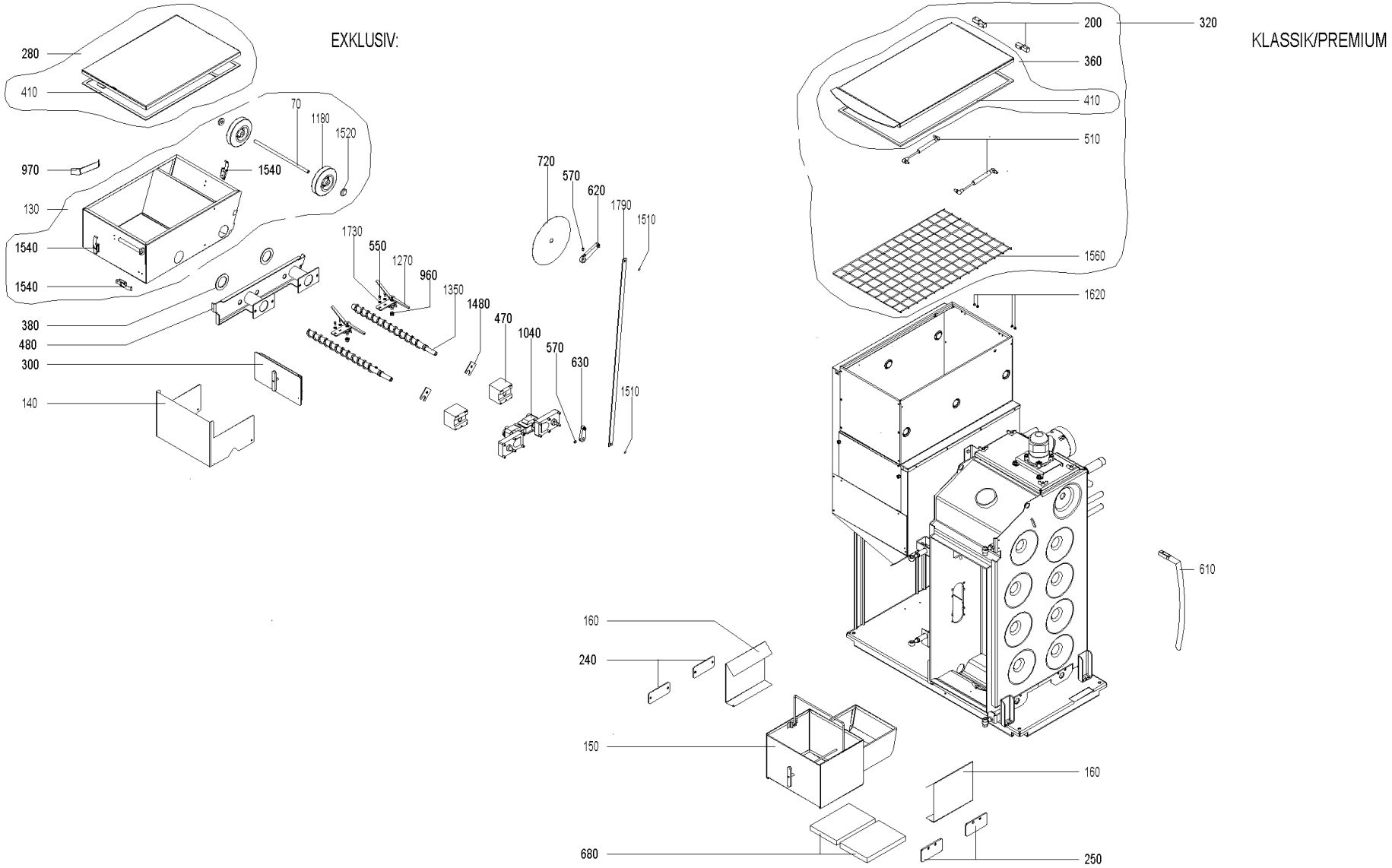
EXKLUSIV:
280
410
70
1180
1520
970
1540
130
1540
1540
380
480
300
140
720
570
620
1790
1510
1730
550
1270
960
1350
1480
470
1040
570
630
1510
KLASSIK/PREMIUM
200
320
360
410
510
1560
1620
610
160
240
150
160
680
250

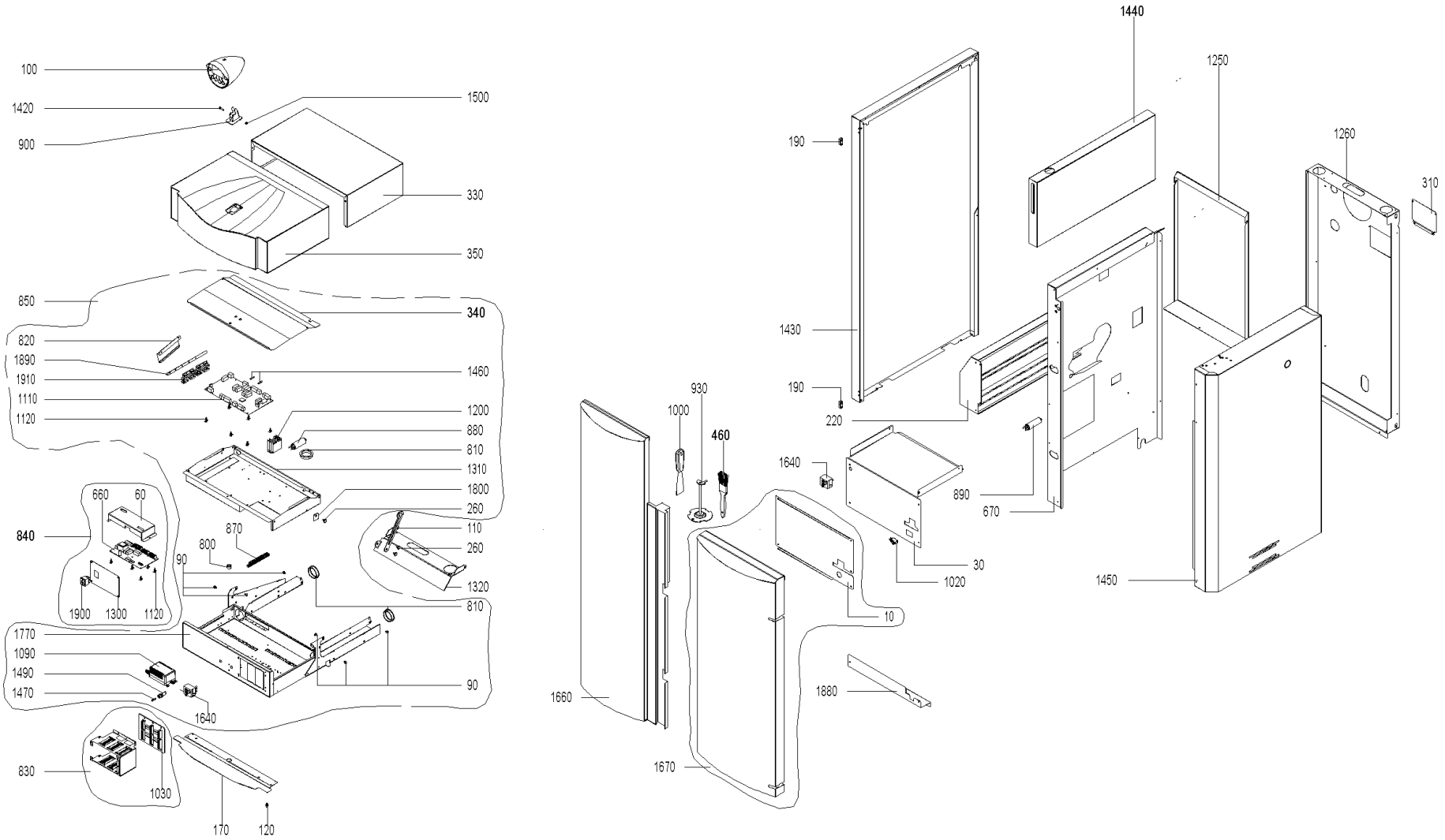
100
1420
900
1500
330
350
850
340
820
1890
1910
1110
1120
1460
1200
880
810
1310
1800
260
110
260
1320
810
660
60
840
870
800
90
1900
1300
1120
1770
1090
1490
1470
1640
90
830
1030
170
120
1440
1250
1260
310
190
1430
190
220
930
1000
460
1640
890
670
30
1020
10
1880
1660
1670
1450

BW_ 150 (BioWIN00+BW_150)

Item no.	Article no.	Description	Quantity	Unit
1470	003228	6.3A fuse (not illustrated)	1.00	pcs
1020	009277	Air control microswitch	1.00	pcs
970	043529	Ash container baffle plate for BioWIN10-26 - Only BioWIN Exklusiv -	1.00	pcs
280	044682	Ash container cover with seal for BioWIN 10-26 - Only BioWIN Exklusiv -	1.00	pcs
130	003080	Ash container cpl. assembled (incl. Cover) for BioWIN 10-26 - Only BioWIN Exklusiv -	1.00	pcs
135	003080	Ash container cpl. assembled (incl. Cover) for BioWIN 10-26 - Only BioWIN Exklusiv -	1.00	pcs
480	045224	Ash container flange, complete painted grey+ seals for BioWIN 10-26 - Only BioWIN Exklusiv -	1.00	pcs
960	006745	Ash conveyor bearing bush	1.00	pcs
380	006843	Ash conveyor seal Ø72x48,3x2mm PMX,BioWIN	1.00	pcs
150	043489	Ash pan complete for BioWIN 10-26 - Only BioWIN Klassik/Premium -	1.00	pcs
140	043325	Ash plate for BioWIN 10-26 - Only BioWIN Exklusiv -	1.00	pcs
1480	043748	Ash removal auger locking plate for BioWIN 10-26 - Only BioWIN Exklusiv -	1.00	pcs
470	044680	Ash removal flange, complete with bearing bushes for BioWIN 10-26 (Only BioWIN Exklusiv), BioWIN XL 35-60	2.00	pcs
1360	041139	Auger, complete for pellets for PMX, BioWIN 10-26	1.00	pcs
1350	043534	Auger for ash removal for BioWIN 10-26 - Only BioWIN Exklusiv -	2.00	pcs
390	006841	Auger tube/boiler seal for PMX, BioWIN 10-26	1.00	pcs
400	006842	Auger tube/reserve supply container seal 178x178x3mm for PMX, BioWIN 10-26, BioWIN XL35-60	1.00	pcs
630	044212	Automatic heating surface cleaning bottom lever, complete for BioWIN 10-26 - Only BioWIN Exklusiv -	1.00	pcs
1790	043460	Automatic heating surface cleaning connection for BioWIN 10-26	1.00	pcs
620	043819	Automatic heating surface cleaning top lever, complete for BioWIN10-26 - Only BioWIN	1.00	pcs

Item no.	Article no.	Description	Quantity	Unit
		Exklusiv -		
70	043523	Axis ash container for BioWIN 10-26 (Only BioWIN Exklusiv), BioWIN XL 35-60	1.00	pcs
80	043771	Axis heating surface cleaning complete - This part is used as spare parts for all types ! - for BioWIN10-26 (except 10/15E)	1.00	pcs
1720	006850	Baffle plate for PMX, BioWIN 10-26	1.00	pcs
190	044677	Bands 96-140 (hinge for left door) with fastening screw for BioWIN 10-26, BioWIN XL 35-60	1.00	pcs
950	006758	Bearing for heating surface cleaning for PMX, BioWIN 10-26	1.00	pcs
965	007125	Bearing for vibrating drive	2.00	pcs
320	503301	BIO039 lid for hopper for BioWIN 10-26 - Only BioWIN Klassik,Exklusiv S -	1.00	pcs
240	041717	Blind flange for ash removal for PMX, BioWIN10-26 - Only BioWIN Klassik/Premium -	1.00	pcs
690	006916	Blower box insulating stone 190 x 139 x 25 SN450 for PMX21/26,BioWIN10-26	1.00	pcs
520	040882	Blower cover for PMX, BioWIN 10-26	1.00	pcs
530	040875	Blower wheel Ø140 for PMX 15, BioWIN10/15, FireWIN to batch 9, VarioWIN	1.00	pcs
850	046125	Boiler control panel BioWIN 10-26 from lot 30	1.00	pcs
260	033091	Bolt DIN 1445 - 8h11 x 4 x 10 - St - galvanised for VarioWIN, FireWIN, BioWIN 10-26, BioWIN XL 35-60	1.00	pcs
1690	006805	Bottom door insulating stone 450 x 346 x 80 for BioWIN 10-26	1.00	pcs
1220	043292	Bottom reserve supply container inspection cover for BioWIN10-26	1.00	pcs
1880	043970	Bracket for bottom insulation for BioWIN10-26	1.00	pcs
1240	042510	Burn-back protection completely assembled for PMX, BioWIN 10-26	1.00	pcs
270	044232	Burner complett for BioWIN 10/15 to lot 29	1.00	pcs
785	053643	Cable - ignition element for BW1, BW2, FireWIN and VarioWIN	1.00	pcs
800	009542	Cable feed-through	1.00	pcs

BW_ 150 (BioWIN00+BW_150)

Item no.	Article no.	Description	Quantity	Unit
810	004096	Cable feed-through 2400 black Ø50	1.00	pcs
770	044659	Cable for auger motor for BioWIN 10-26	1.00	pcs
780	044358	Cable for ignition for BioWIN 10-26	1.00	pcs
750	044359	Cable for motor for heating surface cleaning and ash removal for BioWIN 10-26 - Only BioWIN Klassik -	1.00	pcs
740	045967	Cable for motor shake-out for BioWIN 10-26 from batch 30	1.00	pcs
760	044357	Cable for shaking (012512 Fa. Crouzet) for BioWIN 10-26	1.00	pcs
830	046130	Cable harness for MES control, new ET for BioWIN 10-26, BioWIN XL 35-60	1.00	pcs
840	044671	Cable harness for REG standard control for BioWIN 10-26	1.00	pcs
830	047123	Cable harness MES PLUS BioWIN	1.00	pcs
820	044654	Cable holding plate RAL 7021 for BioWIN 10-26	1.00	pcs
650	025967	Cap nut DIN 1587 - M8 - 6 - galvanised for FAX, FireWIN, VarioWIN, BioWIN 10-26, EasyWIN Klassik/Premium 180	1.00	pcs
1510	016165	Circlip DIN471 - 8 x 0.8 for BioWIN 10-26 (Only BioWIN Exklusiv), BioWIN XL 35-60	1.00	pcs
1530	042369	Clamping plate for PMX21/26, BioWIN 10-26	1.00	pcs
1140	042016	Clearer flat, complete for PMX, BioWIN 10-26	4.00	pcs
90	016006	Collar screw M4 x 11.8 mm, galvanised for BioWIN 10-26,BioWIN XL 35-60	1.00	pcs
370	043827	Comb. chamber door sealing cord, fibreglass packing 16 x 10 mm x 2.17 m for BioWIN 10-26	1.00	pcs
730	044361	Combustion chamber door switch cable for BioWIN 10-26	1.00	pcs
490	043756	Combustion chamber sensor flange for BioWIN10-26, BioWIN XL 35-60	1.00	pcs
890	007332	Condenser 4µF for auger motor for PMX150,BioWIN10/15,FireWIN,VarioWIN, BioWIN XL 35-60	1.00	pcs
880	007330	Condenser for motor MAB 500V, 3µF for HMX,PMX,SWK,BioWIN10-26,FireWIN,VarioWIN,BioWIN XL 35-60, EasyWIN Premium	1.00	pcs

Item no.	Article no.	Description	Quantity	Unit
		180,LogWIN Premiu		
920	006711	Cone BioWIN 10/15 to lot 29, FireWIN to lot 9	1.00	pcs
930	043803	Cone lifter BioWIN 10/15 to lot 29, FireWIN to lot 9	1.00	pcs
1770	044223	Control panel bottom part complete, coated for BioWINT 10-26, BioWIN XL 35-60	1.00	pcs
340	042998	Control panel cover for BioWIN 10-26, SilvaWIN, BioWIN XL 35-60	1.00	pcs
1320	043437	Control panel fixed part hinge for BioWIN 10-26	1.00	pcs
110	044218	Control panel lock arm for BioWIN10-26	1.00	pcs
1310	043807	Control panel top part for BioWIN 10-26, SWK, BioWIN XL35-60	1.00	pcs
1200	045087	Conversion kit relay	1.00	pcs
940	043458	Copper cable for burn-back protection for BioWIN 10-26	1.00	pcs
60	051690	Cover BUML incl. Sticker	1.00	pcs
300	043477	Cover for bottom coasting surface, complete for BioWIN 10-26 - Only BioWIN Exklusiv -	1.00	pcs
290	040895	Cover for coasting surface for BioWIN10-26, PMX	1.00	pcs
50	042375	Cover for insulating stone/blower box for PMX 210/260, BioWIN 10-26	1.00	pcs
310	041539	Cover for rear wall for PMX, BioWIN 10-26	1.00	pcs
1380	006378	Cutting ring DL8 07-151	1.00	pcs
1935	033531	Cylinder-head screw, hexagon socket ISO 4762 - M6x10 - 8.8 - (DIN 912) for VarioWIN, BioWIN 10-26	1.00	pcs
1940	020117	Cylinder-head screw, hexagon socket ISO 4762 - M12x25 - 8.8 - galva. (DIN 912) for VarioWIN, FireWIN, BioWIN10-26, LogWIN Premium	1.00	pcs
980	016719	Cylinder drilling screw 4.2 x 38 DIN7504	1.00	pcs
1920	033528	Cylinder screw M 4 x 6 - 8.8	1.00	pcs
1930	016780	Cylinder screw M4x12 DIN 7985	2.00	pcs

BW_ 150 (BioWIN00+BW_150)

Item no.	Article no.	Description	Quantity	Unit
100	048075	de: InfoWIN-SET für BioWIN10-26 bis SN: 834999	1.00	pcs
1730	018309	Disc 5 DIN134	1.00	pcs
1760	031753	Disc 6 ISO 7093	1.00	pcs
1620	009993	Disc plug T1A Ø5.7 transparent for BioWIN 10-26	1.00	pcs
440	041027	Down chute for pellets for PMX150, BioWIN 10/15	1.00	pcs
1405	045232	Driving rod, complete for BioWIN10-26 à partir de lot 30 , FireWIn à partir de lot 10, VarioWIN	1.00	pcs
430	006010	Eccentric vibration BioWIN, FireWIN	1.00	pcs
740	044777	End switch cable of grate shakings BioWIN 10-26	1.00	pcs
210	006603	Fastening clamp Ø8, DIN 72571, Typ 604 for BioWIN 10-26	1.00	pcs
1100	006766	Feather key, without tightening DIN6885 A 6x6x28 mm for PMX, BioWIN10-26, FireWIN, VarioWIN, BioWIN XL 35-60	1.00	pcs
420	007074	Feed-through grommet DH 80/115/80 for BioWIN 10-15	1.00	pcs
415	045229	Feed-through seal for lever for BioWIN 10-26 from batch 30	1.00	pcs
10	043884	Filling door cover plate for BioWIN 10-26	1.00	pcs
485	017001	Flanged nut M5 for BioWIN 10-26, BioWIN XL 35-60	1.00	pcs
30	043971	Front boiler cover plate for BioWIN10-26	1.00	pcs
350	044220	Front cover, complete for BioWIN 10-26	1.00	pcs
170	044362	Front support cover for BioWIN 10-26	1.00	pcs
1460	006900	Fuse 1 A T 5x20 ceramic tube	1.00	pcs
1490	003663	Fuse holder	1.00	pcs
510	012600	Gas spring 4534DS 0100 N	2.00	pcs
540	044663	Geared motor for auger 4rpm, pluggable conversion instructions for use are enclosed by PMX15 for BioWIN 10/15	1.00	pcs

BW_ 150 (BioWIN00+BW_150)

Item no.	Article no.	Description	Quantity	Unit
1230	041721	Grate plate top BioWIN 10/15 to lot 29	1.00	pcs
590	007073	Grip plug GPN310 G30 SW for water reservoir for BioWIN 10-26	1.00	pcs
640	044684	Heating door, complete for BioWIN 10-26	1.00	pcs
600	043546	Heating door handle, complete coated red for BioWIN 10-26	1.00	pcs
610	044248	Heating surface cleaning hand lever RAL7021 for BioWIN 10-26 - Only BioWIN Klassik/Premium -	1.00	pcs
720	043929	Heating surface cleaning insulation protection Ø220 x Ø18,2 x 1 galvanised for BioWIN 10-26 - Only BioWIN Exklusiv -	1.00	pcs
1420	016214	Hexagon screw DIN931 M5 x 45, black for BioWIN XL 35-60	1.00	pcs
550	031545	Hexagon screw M5x12 DIN 7500 (not ilustrated)	1.00	pcs
1330	006905	Hose clip 50-70/9 C71 for PMX, BioWIN 10-26	1.00	pcs
1340	004386	Hose grommet, union nut and seal for KFE ball valve for BioWIN 10-26, BioWIN XL 35-60,LogWIN Premium 180-505	1.00	pcs
535	046311	Housing foot InfoWIN cpl. with fastening material for LogWIN Premium 180-505,BioWIN 10-26,SWK-T,BioWIN XL 35-60	1.00	pcs
580	055201	Ignition element BioWIN10-26, FireWIN from lot 15, VarioWIN from lot 15 BioWIN XL, LWK	1.00	pcs
580	053851	Ignition element with cable	1.00	pcs
900	043964	InfoWIN bracket for SilvaWIN,BioWIN	1.00	pcs
95	011985	InfoWINplus HW C4 SW V4.10 BioWIN, LWP, JetWIN, EcoWIN	1.00	pcs
1403	045223	Inner driving rod for BioWIN 10-26 from batch 30, VarioWIN, FireWIN	1.00	pcs
670	043928	Insulating plate for BioWIN 10-26	1.00	pcs
680	006917	Insulating stone for rear floor 225 x 155 x 25 for PMX21/26, BioWIN 10-26 (Only BioWIN Klassik/Premium)	2.00	pcs
700	006770	Insulation for blower cover RBP-9 (313x194x30) for PMX, BioWIN10-26	1.00	pcs

BW_ 150 (BioWIN00+BW_150)

Item no.	Article no.	Description	Quantity	Unit
710	040887	Insulation support for blower cover for PMX, BioWIN 10-26	1.00	pcs
1580	044007	Jet protection plate for blower motor for BioWIN 10-26, SilvaWIN	1.00	pcs
860	004385	KFE cock	1.00	pcs
1190	007655	Knurled nut with through-hole thread M5 SW for VarioWIN, FireWIN,BioWIN10-26	1.00	pcs
160	043493	Left/right ash baffle plate for BioWIN 10-26 - Only BioWIN Klassik/Premium -	1.00	pcs
1660	044238	Left door completely assembled for BioWIN10-26	1.00	pcs
1250	043533	Left rear wall for BioWIN 10-26	1.00	pcs
1430	044235	Left side panel completely assembled, new ET for BioWIN 10-26	1.00	pcs
1570	009990	Leg M10 x 40	1.00	pcs
1875	045216	Limit switch bracket for BioWIN 10-26 from batch 30, VarioWIN, FireWIN	1.00	pcs
1800	043808	Locking arm for control panel for BioWIN 10-26, BioWIN XL 35-60	1.00	pcs
120	016001	Locking screw M5 x 19, galvanised for BioWIN 10-26	1.00	pcs
1500	016728	Locknut M 5, DIN 985, black for BioWIN 10-26, BioWIN XL 35-60	1.00	pcs
990	007304	Magnet, complete, glued for motor for PMX, HMX from lot 24, BioWIN 10-26	1.00	pcs
995	001759	Magnetic lock No. 246.41 for GKW,NBE,GKX,GWX,GTX,PMX,HMX,FireWIN,VarioWIN, BioWIN 10-26	2.00	pcs
1085	041430	Mains connection socket 3-pin for MIRA,ETX,PMX,BioWIN10-26,LogWIN Premium 180-505,EasyWIN Premium 180,BioWIN XL 35-60, FireWIN	1.00	pcs
1010	020035	Measuring hole plug for BioWIN 10-26	1.00	pcs
1600	006820	MES007 Immersion sensor (exhaust gas sensor) Pt 1000 for PMX, FireWIN, VarioWIN, BioWIN 10-26, BioWIN XL 35-60	1.00	pcs
1590	502186	MES009M Immersion sensor	1.00	pcs
1270	043816	Mixer, complete painted grey for BioWIN XL 35-60, BioWIN 10-26 (Only BioWIN Exklusiv)	1.00	pcs
660	051541	Modification set BUML TTL to BUML TTL 2Z	1.00	pcs

BW_ 150 (BioWIN00+BW_150)

Item no.	Article no.	Description	Quantity	Unit
1030	046131	Module connection PCB, new ET for BioWIN10-26, BioWIN XL 35-60	1.00	pcs
1040	044665	Motor	1.00	pcs
1060	044666	Motor for blower, ET new Conversion instructions for use with PMX 15-26 are enclosed! for BioWIN 10-26	1.00	pcs
1070	016596	Nut DIN 934 - M6 - A2 for VarioWIN, FireWIN, BioWIN10-26, BioWIN XL 35-60	1.00	pcs
1610	005452	OK-915 Immersion sleeve (129 mm) No.55501.04 for EKX,OK/E,GWX,KSN,ZHN,OK-915,ETX,SNX,FKX,MIRA,FireWIN,VestoWIN Klassik 170-220,	1.00	pcs
65	046214	Partition plate cover cpl. for BioWIN 10-26	1.00	pcs
1035	046214	Partition plate cover cpl. for BioWIN 10-26	1.00	pcs
1650	042368	Partition plate for PMX21/26,BioWIN10-26	1.00	pcs
1110	012002	PCB, FMP BW2 to SN: 829999	1.00	pcs
1120	007609	PCB holder	1.00	pcs
230	044656	Plate fill level switch for BioWIN 10-26	1.00	pcs
595	002050	Power supply unit 002049 holding plate for VarioWIN, FireWIN, BioWIN 10-26, BioWIN XL 35-60, LogWIN Premium 180-505	1.00	pcs
1090	051645	Power supply unit 12V	1.00	pcs
755	002051	Power supply unit cable FRIWO (primary power line) for VarioWIN, FireWIN, BioWIN 10-26, BioWIN XL 35-60, LogWIN Premium 180-505	1.00	pcs
1130	047774	Primary air pin for BioWIN10-26 FireWIN bis Los9 und PMX 21-26	1.00	pcs
1410	041498	Protective tube for exhaust gas sensor	1.00	pcs
1082	009342	Proximity switch, inductive M8x1 for VarioWIN, FireWIN, BioWIN 10-26	1.00	pcs
1080	007821	Proximity switch EC 3025 NPAPL	1.00	pcs
330	044221	Rear cover, complete silk grey (RAL7044) for BioWIN 10-26	1.00	pcs
20	041250	Rear cover plate for PMX, BioWIN10-26	1.00	pcs

BW_ 150 (BioWIN00+BW_150)

Item no.	Article no.	Description	Quantity	Unit
360	044678	Reserve supply container cover, complete with seal, silk grey for BioWIN 10-26 - Only BioWIN Klassik -	1.00	pcs
1805	045586	Reserve supply container for pellets for BioWIN 10-26	1.00	pcs
250	043752	Right blind flange, for ash removal for BioWIN 10-26 - Only BioWIN Klassik/Premium -	1.00	pcs
40	041251	Right cover plate for PMX, BioWIN 10-26	1.00	pcs
1670	044236	Right door completely assembled for BioWIN 10-26	1.00	pcs
1260	044239	Right rear wall completely assembled for BioWIN 10-26	1.00	pcs
1450	044234	Right side panel completely assembled for BioWIN 10-26	1.00	pcs
1440	044227	Right side panel for reserve supply container for BioWIN10-26	1.00	pcs
1900	005563	Rocker switch SW/GR 0-1	1.00	pcs
1640	046451	Safety thermostat LS1+100/-6, Auger for FireWIN, BioWIN 10-26, BioWIN XL 35-60	1.00	pcs
1400	009219	Screw door handle bearing M12 (WAF17/30) - galvanised for HMX, BioWIN10-26, FireWIN, VarioWIN, EasyWIN Klassik/Premium 180	1.00	pcs
1395	045076	Screw M6 (with U-washer and nut) for heating surface cleaning complete for PMX, BioWIN10-26, FireWIN, VarioWIN	1.00	pcs
1390	006756	Screw M6 for heating surface cleaning for PMX,BioWIN 10-26,FireWIN, BioWIN XL 35-60, LogWIN Premium 180-505	1.00	pcs
1780	048837	Seal	1.00	pcs
380	046455	Seal ash container (2pieces 190xØ10mm) for BioWIN 10-26	1.00	pcs
1370	042679	Sealed auger tube, new ET for PMX, BioWIN 10-26	1.00	pcs
410	000047	Sealing band 12x4mm SK for GMX,GENIO/MultiWIN,XENTA,BioWIN 10-26 (Only BioWIN Klassik), VarioWIN, FireWIN	2.20	m
385	016162	Seal Thermocontrol sensor (temperature sensor), 3/4" (38x27x3mm) for BioWIN 10-26	1.00	pcs
560	016163	Setscrew DIN913 - M8 x 40-A2 for BioWIN 10-26	1.00	pcs

BW_ 150 (BioWIN00+BW_150)

Item no.	Article no.	Description	Quantity	Unit
570	033112	Setscrew M8x10 DIN916	1.00	pcs
1050	012512	Shake-out motor	1.00	pcs
1280	042536	Shaker lever 1 PMX 21/26, BioWIN 10-26, FireWIN	1.00	pcs
1290	042103	Shaker lever 2 PMX21/26,BioWIN10-26	1.00	pcs
910	041734	Shaker motor bracket BioWIN 10-26	1.00	pcs
1915	017048	Shoulder screw M8 10x25 ISO 7379	1.00	pcs
200	044802	Southco hinge	1.00	pcs
1000	009540	Spatula	1.00	pcs
1550	017981	Split pin DIN 94, 4 x 32 galvanised for BioWIN 10-26, VestoWIN Klassik 170-220	1.00	pcs
1540	009546	Spring lock	1.00	pcs
450	017922	Spring washer DIN 127B, M8 galvanised for BioWIN 10-26, EasyWIN Premium 180	1.00	pcs
790	044360	STB auger tube cable for BioWIN 10-26, BioWIN XL 35-60 * not illustrated	1.00	pcs
1560	007239	Steel mesh (galvanised wire mesh 646 x 394 x 4) for BioWIN 10-26 - Only BioWIN Klassik -	1.00	pcs
1910	041914	Strain relief 4X, complete, assembled for ETX/SNX,PSX,GENIO/MultiWIN, SilvaWIN, BioWIN XL, BioWIN10-26, BioWIN XL 35-60	1.00	pcs
1890	044217	Strain relief bracket for SilvaWIN, BioWIN10-26, BioWIN XL 35-60	1.00	pcs
180	041249	Support rail for baffle plate for PMX, BioWIN 10-26	1.00	pcs
1300	044244	Switch panel REG for BioWIN 10-26	1.00	pcs
870	009928	Terminal bar	1.00	pcs
1630	007626	Thermocouple	1.00	pcs
1680	006725	Top door insulating stone 346 x 290.5 x 80 for BioWIN 10-26	1.00	pcs
1210	043291	Top reserve supply container inspection cover for BioWIN10-26	1.00	pcs
220	045207	Touch protection for BioWIN10-26 from batch 30	1.00	pcs

BW_ 150 (BioWIN00+BW_150)

Item no.	Article no.	Description	Quantity	Unit
1710	013749	Union nut 3/8"	1.00	pcs
1700	006351	Union nut ML8 GV	1.00	pcs
1785	007082	Velvet foils 150x20mm, grey, for cover for BioWIN 10-26	1.00	pcs
1860	040925	Wago terminal block 8-pin blue/grey (230 V) pre-assembled for BioWIN 10-26, BioWIN XL 35-60 (*not illustrated)	1.00	pcs
1810	040926	Wago terminal block 11-pin orange (extra-low voltage) pre-assembled for BioWIN 10-26, BioWIN XL 35-60	1.00	pcs
1850	006720	Wago terminal block 261 1-9, 8-pce. Emergency door switch/probe switching for BioWIN, VarioWIN, FireWIN, BioWIN10-26, BioWIN XL 35	1.00	pcs
1830	006719	Wago terminal block 261 6-pce. heating requirement/probe switching for BioWIN 10-26, BioWIN XL 35-60 (*not illustrated)	1.00	pcs
1840	009960	Wago terminal block 261; 8-pin 230V extnd. for VarioWIN, FireWIN, BioWIN10-26, BioWIN XL 35-60 (*not illustrated)	1.00	pcs
1820	009968	Wago terminal block 261; 13-pin orange extra-low voltage (no. 1-13), for VarioWIN, FireWIN, BioWIN 10-26, BioWIN XL 35-60 (*not il	1.00	pcs
1750	024767	Washer DIN 125 - M8 - galvanised, ISO 7089 for VarioWIN, BioWIN 10-26, BioWIN XL 35-60, EasyWIN Premium 180	1.00	pcs
1740	020397	Washer M6, DIN125, polyamide, 6.6 for BioWIN 10-26,BioWIN XL 35-60	1.00	pcs
1520	006889	Washer Ø12	1.00	pcs
1870	007070	Water tank for BioWIN 10-26	1.00	pcs
460	017094	WERL056 Flat brush 1 1/2" NO. 72753 for FireWIN, VarioWIN, BioWIN10-26, BioWIN XL 35-60	1.00	pcs
1180	006888	Wheel AG 125-12	1.00	pcs
500	007366	Wing nut M8	1.00	pcs

Ash conveyor (A000123)

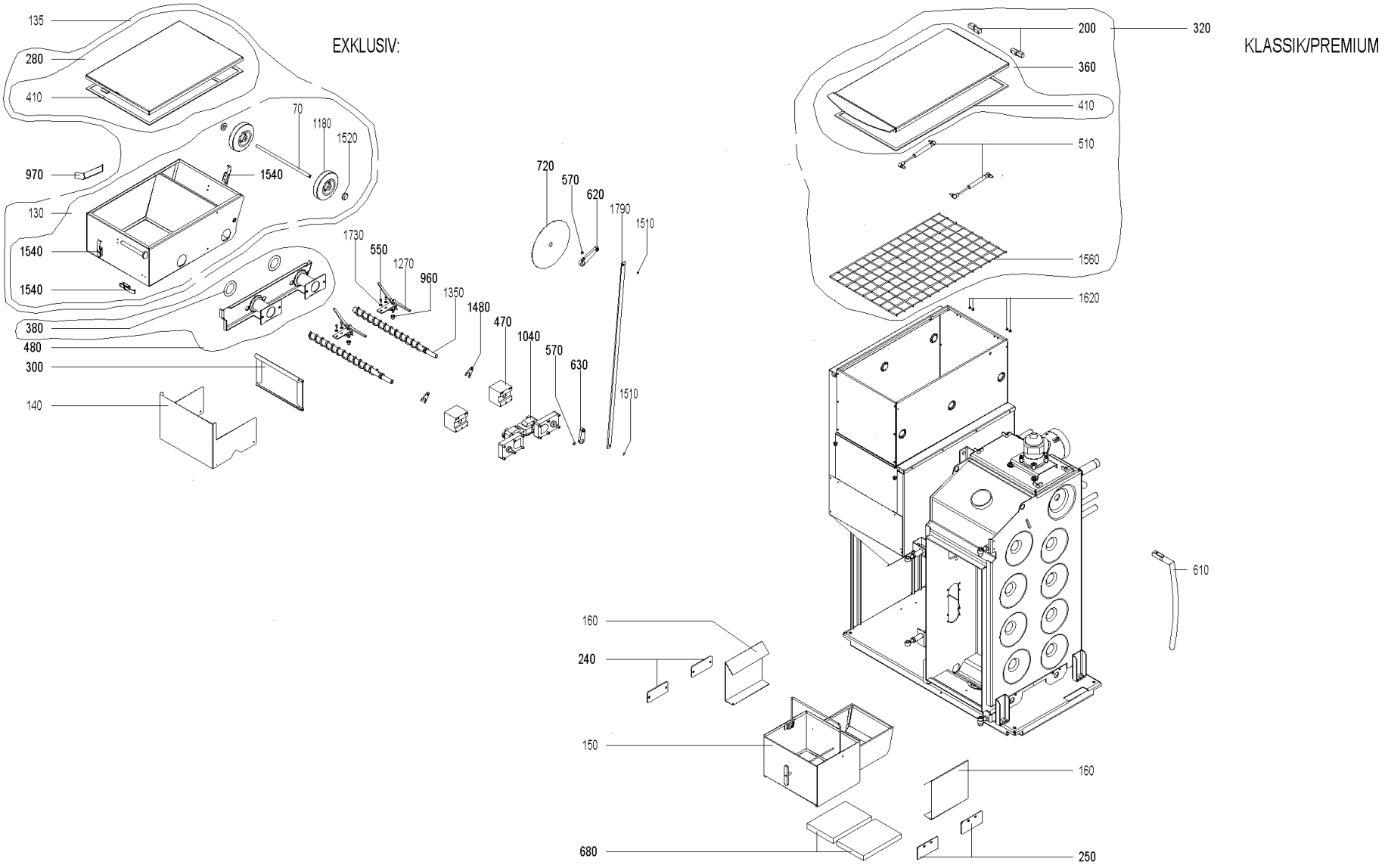

28.10.2016

Ash conveyor (A000123)

Item no.	Article no.	Description	Quantity	Unit
970	043529	Ash container baffle plate for BioWIN10-26 - Only BioWIN Exklusiv -	1.00	pcs
280	044682	Ash container cover with seal for BioWIN 10-26 - Only BioWIN Exklusiv -	1.00	pcs
130	003080	Ash container cpl. assembled (incl. Cover) for BioWIN 10-26 - Only BioWIN Exklusiv -	1.00	pcs
135	003080	Ash container cpl. assembled (incl. Cover) for BioWIN 10-26 - Only BioWIN Exklusiv -	1.00	pcs
480	045224	Ash container flange, complete painted grey+ seals for BioWIN 10-26 - Only BioWIN Exklusiv -	1.00	pcs
960	006745	Ash conveyor bearing bush	1.00	pcs
380	006843	Ash conveyor seal Ø72x48,3x2mm PMX,BioWIN	1.00	pcs
150	043489	Ash pan complete for BioWIN 10-26 - Only BioWIN Klassik/Premium -	1.00	pcs
140	043325	Ash plate for BioWIN 10-26 - Only BioWIN Exklusiv -	1.00	pcs
1480	043748	Ash removal auger locking plate for BioWIN 10-26 - Only BioWIN Exklusiv -	1.00	pcs
470	044680	Ash removal flange, complete with bearing bushes for BioWIN 10-26 (Only BioWIN Exklusiv), BioWIN XL 35-60	2.00	pcs
1350	043534	Auger for ash removal for BioWIN 10-26 - Only BioWIN Exklusiv -	2.00	pcs
630	044212	Automatic heating surface cleaning bottom lever, complete for BioWIN 10-26 - Only BioWIN Exklusiv -	1.00	pcs
1790	043460	Automatic heating surface cleaning connection for BioWIN 10-26	1.00	pcs
620	043819	Automatic heating surface cleaning top lever, complete for BioWIN10-26 - Only BioWIN Exklusiv -	1.00	pcs
70	043523	Axis ash container for BioWIN 10-26 (Only BioWIN Exklusiv), BioWIN XL 35-60	1.00	pcs
320	503301	BIO039 lid for hopper for BioWIN 10-26 - Only BioWIN Klassik,Exklusiv S -	1.00	pcs
240	041717	Blind flange for ash removal for PMX, BioWIN10-26 - Only BioWIN Klassik/Premium -	2.00	pcs
1510	016165	Circlip DIN471 - 8 x 0.8 for BioWIN 10-26 (Only BioWIN Exklusiv), BioWIN XL 35-60	1.00	pcs
300	043477	Cover for bottom coasting surface, complete for BioWIN 10-26 - Only BioWIN Exklusiv -	1.00	pcs

Ash conveyor (A000123)

Item no.	Article no.	Description	Quantity	Unit
1730	018309	Disc 5 DIN134	1.00	pcs
1620	009993	Disc plug T1A Ø5.7 transparent for BioWIN 10-26	1.00	pcs
510	012600	Gas spring 4534DS 0100 N	2.00	pcs
610	044248	Heating surface cleaning hand lever RAL7021 for BioWIN 10-26 - Only BioWIN Klassik/Premium -	1.00	pcs
720	043929	Heating surface cleaning insulation protection Ø220 x Ø18,2 x 1 galvanised for BioWIN 10-26 - Only BioWIN Exklusiv -	1.00	pcs
550	031545	Hexagon screw M5x12 DIN 7500 (not ilustrated)	1.00	pcs
680	006917	Insulating stone for rear floor 225 x 155 x 25 for PMX21/26, BioWIN 10-26 (Only BioWIN Klassik/Premium)	2.00	pcs
160	043493	Left/right ash baffle plate for BioWIN 10-26 - Only BioWIN Klassik/Premium -	2.00	pcs
1270	043816	Mixer, complete painted grey for BioWIN XL 35-60, BioWIN 10-26 (Only BioWIN Exklusiv)	1.00	pcs
1040	044665	Motor	1.00	pcs
360	044678	Reserve supply container cover, complete with seal, silk grey for BioWIN 10-26 - Only BioWIN Klassik -	1.00	pcs
250	043752	Right blind flange, for ash removal for BioWIN 10-26 - Only BioWIN Klassik/Premium -	2.00	pcs
380	046455	Seal ash container (2pieces 190xØ10mm) for BioWIN 10-26	1.00	pcs
410	000047	Sealing band 12x4mm SK for GMX,GENIO/MultiWIN,XENTA,BioWIN 10-26 (Only BioWIN Klassik), VarioWIN, FireWIN	2.20	m
570	033112	Setscrew M8x10 DIN916	1.00	pcs
200	044802	Southco hinge	2.00	pcs
1540	009546	Spring lock	1.00	pcs
1560	007239	Steel mesh (galvanised wire mesh 646 x 394 x 4) for BioWIN 10-26 - Only BioWIN Klassik -	1.00	pcs
1520	006889	Washer Ø12	1.00	pcs

Ash conveyor (A000123)

Item no.	Article no.	Description	Quantity	Unit
1180	006888	Wheel AG 125-12	1.00	pcs

Boiler (A000121)

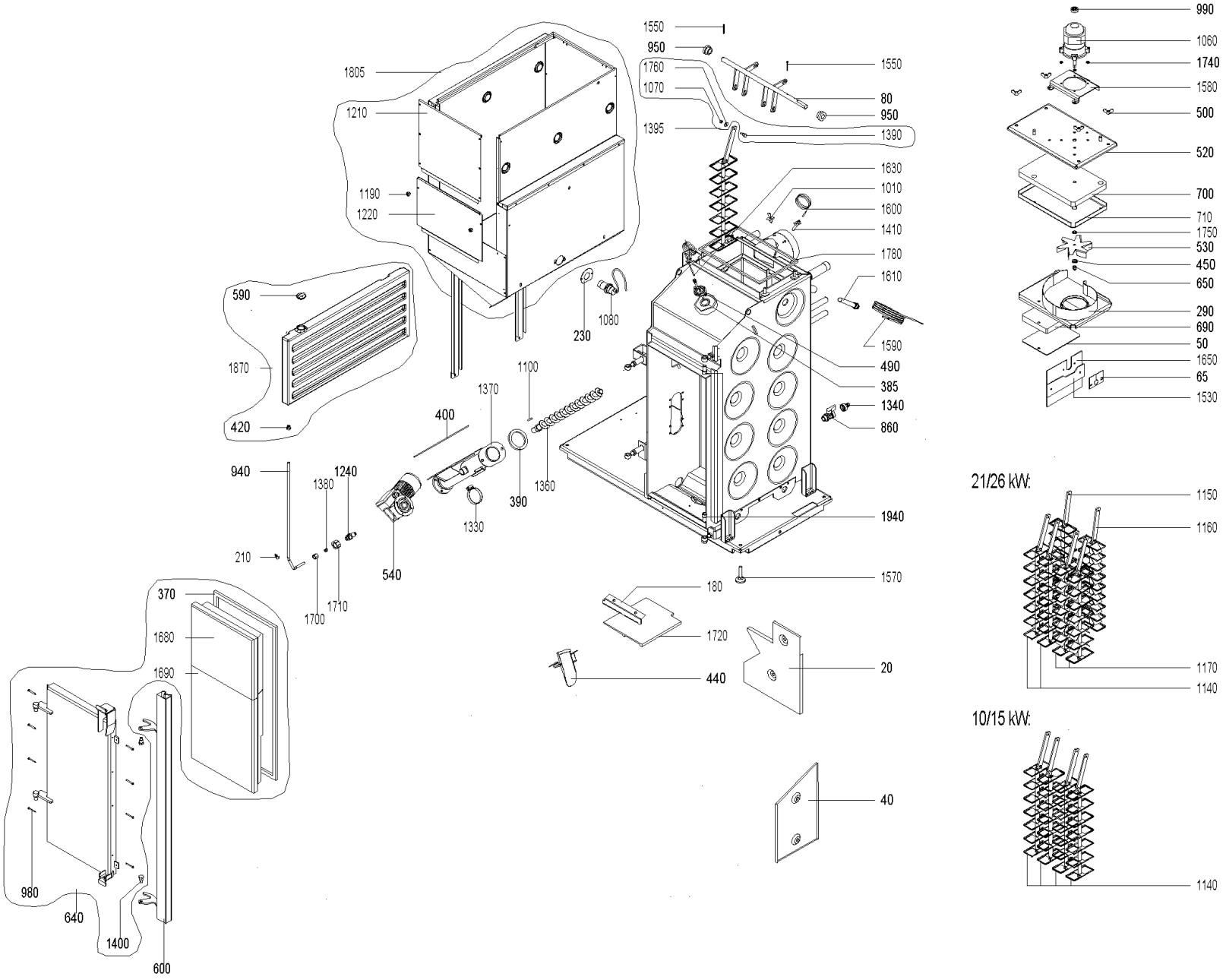

Boiler (A000121)

Item no.	Article no.	Description	Quantity	Unit
1360	041139	Auger, complete for pellets for PMX, BioWIN 10-26	1.00	pcs
390	006841	Auger tube/boiler seal for PMX, BioWIN 10-26	1.00	pcs
400	006842	Auger tube/reserve supply container seal 178x178x3mm for PMX, BioWIN 10-26, BioWIN XL35-60	1.00	pcs
80	043771	Axis heating surface cleaning complete - This part is used as spare parts for all types ! - for BioWIN10-26 (except 10/15E)	1.00	pcs
1720	006850	Baffle plate for PMX, BioWIN 10-26	1.00	pcs
950	006758	Bearing for heating surface cleaning for PMX, BioWIN 10-26	1.00	pcs
690	006916	Blower box insulating stone 190 x 139 x 25 SN450 for PMX21/26,BioWIN10-26	1.00	pcs
520	040882	Blower cover for PMX, BioWIN 10-26	1.00	pcs
530	040875	Blower wheel Ø140 for PMX 15, BioWIN10/15, FireWIN to batch 9, VarioWIN	1.00	pcs
1690	006805	Bottom door insulating stone 450 x 346 x 80 for BioWIN 10-26	1.00	pcs
1220	043292	Bottom reserve supply container inspection cover for BioWIN10-26	1.00	pcs
1240	042510	Burn-back protection completely assembled for PMX, BioWIN 10-26	1.00	pcs
650	025967	Cap nut DIN 1587 - M8 - 6 - galvanised for FAX, FireWIN, VarioWIN, BioWIN 10-26, EasyWIN Klassik/Premium 180	1.00	pcs
1530	042369	Clamping plate for PMX21/26, BioWIN 10-26	1.00	pcs
1140	042016	Clearer flat, complete for PMX, BioWIN 10-26	4.00	pcs
370	043827	Comb. chamber door sealing cord, fibreglass packing 16 x 10 mm x 2.17 m for BioWIN 10-26	1.00	pcs
490	043756	Combustion chamber sensor flange for BioWIN10-26, BioWIN XL 35-60	1.00	pcs
940	043458	Copper cable for burn-back protection for BioWIN 10-26	1.00	pcs
290	040895	Cover for coasting surface for BioWIN10-26, PMX	1.00	pcs
50	042375	Cover for insulating stone/blower box for PMX 210/260, BioWIN 10-26	1.00	pcs

Boiler (A000121)

Item no.	Article no.	Description	Quantity	Unit
1380	006378	Cutting ring DL8 07-151	1.00	pcs
1940	020117	Cylinder-head screw, hexagon socket ISO 4762 - M12x25 - 8.8 - galva. (DIN 912) for VarioWIN, FireWIN, BioWIN10-26, LogWIN Premium	1.00	pcs
980	016719	Cylinder drilling screw 4.2 x 38 DIN7504	1.00	pcs
1760	031753	Disc 6 ISO 7093	1.00	pcs
440	041027	Down chute for pellets for PMX150, BioWIN 10/15	1.00	pcs
210	006603	Fastening clamp Ø8, DIN 72571, Typ 604 for BioWIN 10-26	1.00	pcs
1100	006766	Feather key, without tightening DIN6885 A 6x6x28 mm for PMX, BioWIN10-26, FireWIN, VarioWIN, BioWIN XL 35-60	1.00	pcs
420	007074	Feed-through grommet DH 80/115/80 for BioWIN 10-15	1.00	pcs
540	044663	Geared motor for auger 4rpm, pluggable conversion instructions for use are enclosed by PMX15 for BioWIN 10/15	1.00	pcs
590	007073	Grip plug GPN310 G30 SW for water reservoir for BioWIN 10-26	1.00	pcs
640	044684	Heating door, complete for BioWIN 10-26	1.00	pcs
600	043546	Heating door handle, complete coated red for BioWIN 10-26	1.00	pcs
1330	006905	Hose clip 50-70/9 C71 for PMX, BioWIN 10-26	1.00	pcs
1340	004386	Hose grommet, union nut and seal for KFE ball valve for BioWIN 10-26, BioWIN XL 35-60,LogWIN Premium 180-505	1.00	pcs
700	006770	Insulation for blower cover RBP-9 (313x194x30) for PMX, BioWIN10-26	1.00	pcs
710	040887	Insulation support for blower cover for PMX, BioWIN 10-26	1.00	pcs
1580	044007	Jet protection plate for blower motor for BioWIN 10-26, SilvaWIN	1.00	pcs
860	004385	KFE cock	1.00	pcs
1190	007655	Knurled nut with through-hole thread M5 SW for VarioWIN, FireWIN,BioWIN10-26	1.00	pcs
1570	009990	Leg M10 x 40	4.00	pcs

Boiler (A000121)

Item no.	Article no.	Description	Quantity	Unit
990	007304	Magnet, complete, glued for motor for PMX, HMX from lot 24, BioWIN 10-26	1.00	pcs
1010	020035	Measuring hole plug for BioWIN 10-26	1.00	pcs
1600	006820	MES007 Immersion sensor (exhaust gas sensor) Pt 1000 for PMX, FireWIN, VarioWIN, BioWIN 10-26, BioWIN XL 35-60	1.00	pcs
1590	502186	MES009M Immersion sensor	1.00	pcs
1060	044666	Motor for blower, ET new Conversion instructions for use with PMX 15-26 are enclosed! for BioWIN 10-26	1.00	pcs
1070	016596	Nut DIN 934 - M6 - A2 for VarioWIN, FireWIN, BioWIN10-26, BioWIN XL 35-60	1.00	pcs
1610	005452	OK-915 Immersion sleeve (129 mm) No.55501.04 for EKX,OK/E,GWX,KSN,ZHN,OK-915,ETX,SNX,FKX,MIRA,FireWIN,VestoWIN Klassik 170-220,	1.00	pcs
65	046214	Partition plate cover cpl. for BioWIN 10-26	1.00	pcs
1650	042368	Partition plate for PMX21/26,BioWIN10-26	1.00	pcs
230	044656	Plate fill level switch for BioWIN 10-26	1.00	pcs
1410	041498	Protective tube for exhaust gas sensor	1.00	pcs
1080	007821	Proximity switch EC 3025 NPAPL	1.00	pcs
20	041250	Rear cover plate for PMX, BioWIN10-26	1.00	pcs
1805	045586	Reserve supply container for pellets for BioWIN 10-26	1.00	pcs
40	041251	Right cover plate for PMX, BioWIN 10-26	1.00	pcs
1400	009219	Screw door handle bearing M12 (WAF17/30) - galvanised for HMX, BioWIN10-26, FireWIN, VarioWIN, EasyWIN Klassik/Premium 180	1.00	pcs
1395	045076	Screw M6 (with U-washer and nut) for heating surface cleaning complete for PMX, BioWIN10-26, FireWIN, VarioWIN	1.00	pcs
1390	006756	Screw M6 for heating surface cleaning for PMX,BioWIN 10-26,FireWIN, BioWIN XL 35-60, LogWIN Premium 180-505	1.00	pcs
1780	048837	Seal	1.00	pcs

Boiler (A000121)

Item no.	Article no.	Description	Quantity	Unit
1370	042679	Sealed auger tube, new ET for PMX, BioWIN 10-26	1.00	pcs
385	016162	Seal Thermocontrol sensor (temperature sensor), 3/4" (38x27x3mm) for BioWIN 10-26	1.00	pcs
1550	017981	Split pin DIN 94, 4 x 32 galvanised for BioWIN 10-26, VestoWIN Klassik 170-220	1.00	pcs
450	017922	Spring washer DIN 127B, M8 galvanised for BioWIN 10-26, EasyWIN Premium 180	1.00	pcs
180	041249	Support rail for baffle plate for PMX, BioWIN 10-26	1.00	pcs
1630	007626	Thermocouple	1.00	pcs
1680	006725	Top door insulating stone 346 x 290.5 x 80 for BioWIN 10-26	1.00	pcs
1210	043291	Top reserve supply container inspection cover for BioWIN10-26	1.00	pcs
1710	013749	Union nut 3/8"	1.00	pcs
1700	006351	Union nut ML8 GV	1.00	pcs
1750	024767	Washer DIN 125 - M8 - galvanised, ISO 7089 for VarioWIN, BioWIN 10-26, BioWIN XL 35-60, EasyWIN Premium 180	1.00	pcs
1740	020397	Washer M6, DIN125, polyamide, 6.6 for BioWIN 10-26,BioWIN XL 35-60	1.00	pcs
1870	007070	Water tank for BioWIN 10-26	1.00	pcs
500	019415	Wing nut DIN 315 - M8 - brass for FAX, FireWIN, VarioWIN, BioWIN 10, EasyWIN Premium 180	4.00	pcs

Burner pot (A000125)

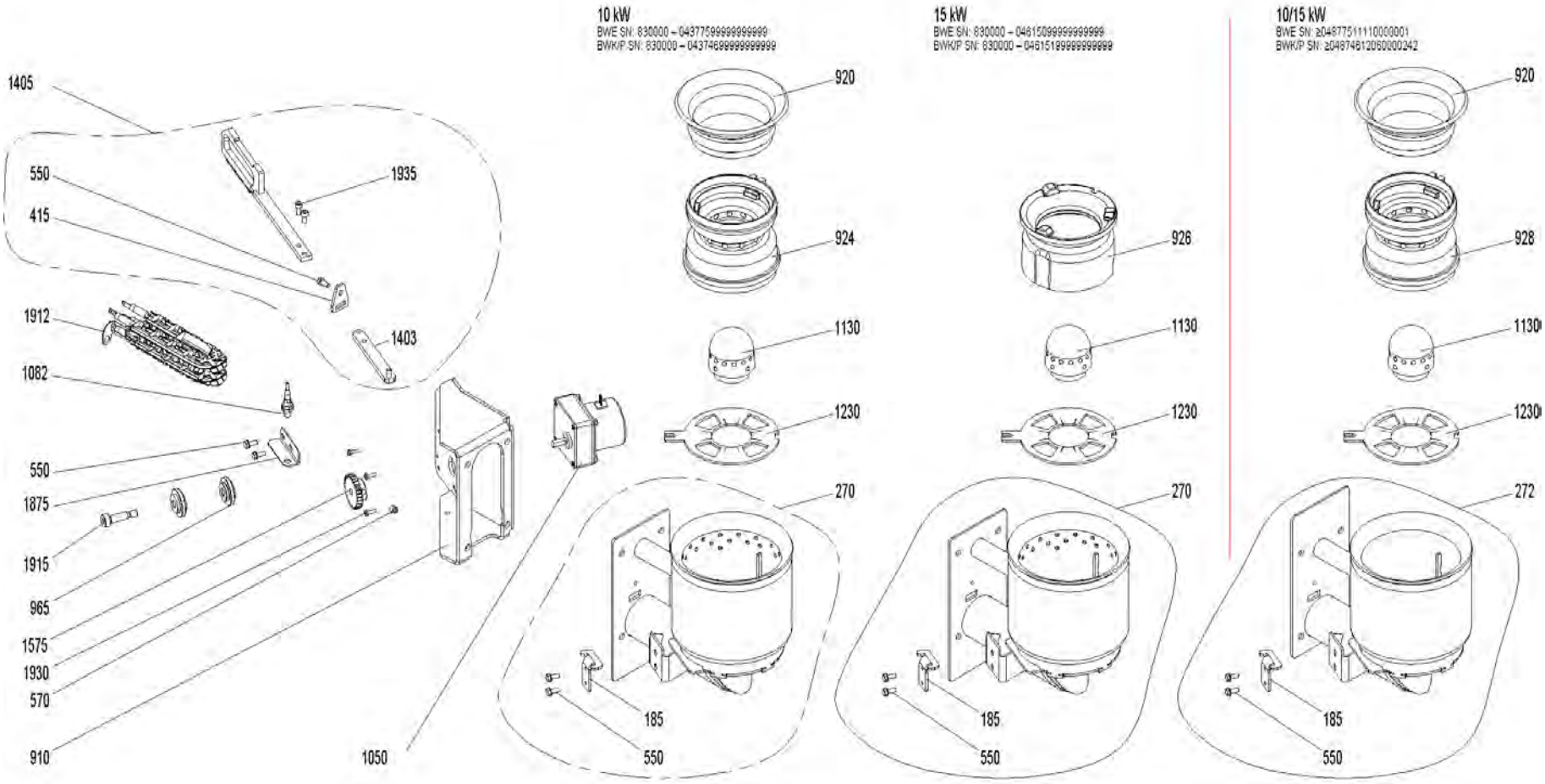

Burner pot (A000125)

Item no.	Article no.	Description	Quantity	Unit
965	007125	Bearing for vibrating drive	2.00	pcs
1880	043970	Bracket for bottom insulation for BioWIN10-26	1.00	pcs
270	046210	Burner, complete for BioWIN 10/15, from batch 30	1.00	pcs
785	053643	Cable - ignition element for BW1, BW2, FireWIN and VarioWIN	1.00	pcs
928	007312	Cone, bottom part - cone Øi=71 - for VarioWIN	1.00	pcs
920	007310	Cone, top part - split cone from batch 30 - for BioWIN10, VarioWIN	1.00	pcs
926	006708	Cone 1.4855 for BioWIN 15 from batch 30, for FireWIN from batch 10	1.00	pcs
924	007309	Cone bottom part Øi=63 - Split cone from batch 30 - for BioWIN 10	1.00	pcs
1935	033531	Cylinder-head screw, hexagon socket ISO 4762 - M6x10 - 8.8 - (DIN 912) for VarioWIN, BioWIN 10-26	1.00	pcs
1930	016780	Cylinder screw M4x12 DIN 7985	2.00	pcs
272	048722	de: Brenner kpl. für BioWIN 10/15; ab Los 30; Doppelkonus	1.00	pcs
1405	045232	Driving rod, complete for BioWIN10-26 à partir de lot 30 , FireWIn à partir de lot 10, VarioWIN	1.00	pcs
185	045919	Driving rod seating bracket for VarioWIN, BioWIN 10-26 from batch 30, FireWIN	1.00	pcs
415	045229	Feed-through seal for lever for BioWIN 10-26 from batch 30	1.00	pcs
1230	045212	Grate plate, top for BioWIN 10/15 from batch 30, FireWIN from batch 10, VarioWIN	1.00	pcs
1050	012530	Grate shaking motor mounted replacement: 012517 for BioWIN10-26, FireWIN, VarioWIN	1.00	pcs
550	031545	Hexagon screw M5x12 DIN 7500 (not ilustrated)	1.00	pcs
1912	055201	Ignition element BioWIN10-26, FireWIN from lot 15, VarioWIN from lot 15 BioWIN XL, LWK	1.00	pcs
1913	053851	Ignition element with cable	1.00	pcs
1403	045223	Inner driving rod for BioWIN 10-26 from batch 30, VarioWIN, FireWIN	1.00	pcs
1875	045216	Limit switch bracket for BioWIN 10-26 from batch 30, VarioWIN, FireWIN	1.00	pcs

Burner pot (A000125)

Item no.	Article no.	Description	Quantity	Unit
1130	007210	Primary air pin	1.00	pcs
1082	009342	Proximity switch, inductive M8x1 for VarioWIN, FireWIN, BioWIN 10-26	1.00	pcs
560	016163	Setscrew DIN913 - M8 x 40-A2 for BioWIN 10-26	1.00	pcs
570	033112	Setscrew M8x10 DIN916	1.00	pcs
910	045215	Shake-out motor bracket for BioWIN 10-26 from batch 30, FireWIN from batch 10, VarioWIN	1.00	pcs
1915	017048	Shoulder screw M8 10x25 ISO 7379	1.00	pcs
1575	047115	Spur gear Z=28; m=1.5, for shake-out drive for FireWIN from batch 10, BioWIN 10/15 from batch 30, VarioWIN	1.00	pcs

Cladding (A000124)

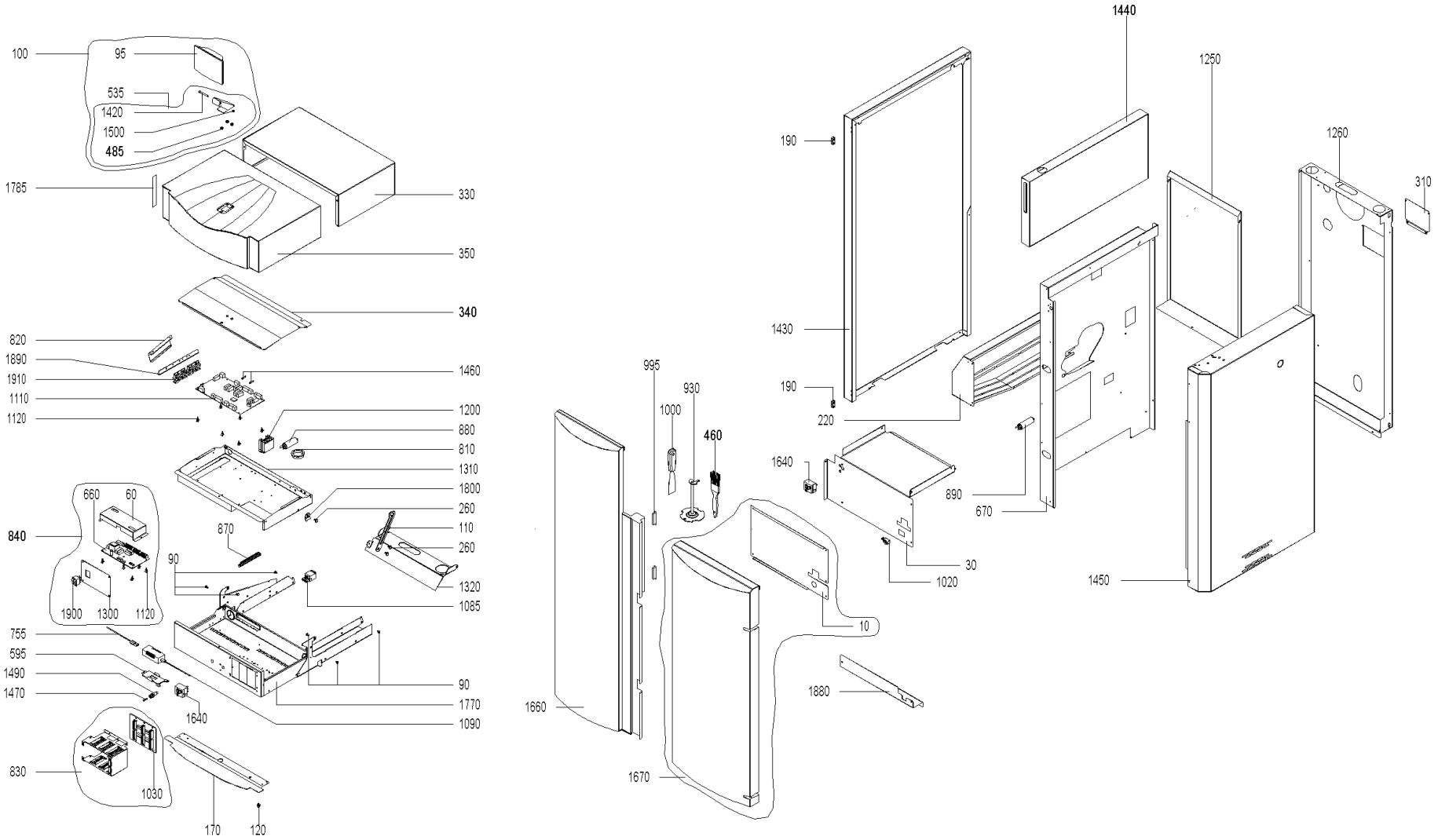

Cladding (A000124)

Item no.	Article no.	Description	Quantity	Unit
1470	003228	6.3A fuse (not illustrated)	1.00	pcs
1020	009277	Air control microswitch	1.00	pcs
190	044677	Bands 96-140 (hinge for left door) with fastening screw for BioWIN 10-26, BioWIN XL 35-60	1.00	pcs
850	046125	Boiler control panel BioWIN 10-26 from lot 30	1.00	pcs
260	033091	Bolt DIN 1445 - 8h11 x 4 x 10 - St - galvanised for VarioWIN, FireWIN, BioWIN 10-26, BioWIN XL 35-60	1.00	pcs
1880	043970	Bracket for bottom insulation for BioWIN10-26	1.00	pcs
785	053643	Cable - ignition element for BW1, BW2, FireWIN and VarioWIN	1.00	pcs
810	004096	Cable feed-through 2400 black Ø50	1.00	pcs
770	044659	Cable for auger motor for BioWIN 10-26	1.00	pcs
780	044358	Cable for ignition for BioWIN 10-26	1.00	pcs
750	044359	Cable for motor for heating surface cleaning and ash removal for BioWIN 10-26 - Only BioWIN Klassik -	1.00	pcs
740	045967	Cable for motor shake-out for BioWIN 10-26 from batch 30	1.00	pcs
760	044357	Cable for shaking (012512 Fa. Crouzet) for BioWIN 10-26	1.00	pcs
830	046130	Cable harness for MES control, new ET for BioWIN 10-26, BioWIN XL 35-60	1.00	pcs
840	044671	Cable harness for REG standard control for BioWIN 10-26	1.00	pcs
830	047123	Cable harness MES PLUS BioWIN	1.00	pcs
820	044654	Cable holding plate RAL 7021 for BioWIN 10-26	1.00	pcs
890	007334	Capacitor 8µF for auger motor, MAB MKP8 for PMX21/26, BioWIN 21/26, BioWIN XL 35-60	1.00	pcs
930	046572	Cleaning tool/cone removal tool for BioWIN21/26	1.00	pcs
930	046570	Cleaning tool / removal device for cone for BioWIN 10 from batch30, VarioWIN	1.00	pcs
90	016006	Collar screw M4 x 11.8 mm, galvanised for BioWIN 10-26,BioWIN XL 35-60	1.00	pcs

Cladding (A000124)

Item no.	Article no.	Description	Quantity	Unit
730	044361	Combustion chamber door switch cable for BioWIN 10-26	1.00	pcs
890	007332	Condenser 4µF for auger motor for PMX150,BioWIN10/15,FireWIN,VarioWIN, BioWIN XL 35-60	1.00	pcs
880	007330	Condenser for motor MAB 500V, 3µF for HMX,PMX,SWK,BioWIN10-26,FireWIN,VarioWIN,BioWIN XL 35-60, EasyWIN Premium 180,LogWIN Premiu	1.00	pcs
930	046571	Cone cleaning tool/removal device for BioWIN 15 from batch 30, FireWIN from batch 10	1.00	pcs
1770	044223	Control panel bottom part complete, coated for BioWINT 10-26, BioWIN XL 35-60	1.00	pcs
340	042998	Control panel cover for BioWIN 10-26, SilvaWIN, BioWIN XL 35-60	1.00	pcs
1320	043437	Control panel fixed part hinge for BioWIN 10-26	1.00	pcs
110	044218	Control panel lock arm for BioWIN10-26	1.00	pcs
1310	043807	Control panel top part for BioWIN 10-26, SWK, BioWIN XL35-60	1.00	pcs
1200	045087	Conversion kit relay	1.00	pcs
60	051690	Cover BUML incl. Sticker	1.00	pcs
310	041539	Cover for rear wall for PMX, BioWIN 10-26	1.00	pcs
100	048075	de: InfoWIN-SET für BioWIN10-26 bis SN: 834999	1.00	pcs
1110	011995	de: Platine Feuerungsautomat FMP-B2 V6.50 BioWIN ab SN: 830001	1.00	pcs
10	043884	Filling door cover plate for BioWIN 10-26	1.00	pcs
485	017001	Flanged nut M5 for BioWIN 10-26, BioWIN XL 35-60	1.00	pcs
30	043971	Front boiler cover plate for BioWIN10-26	1.00	pcs
350	044220	Front cover, complete for BioWIN 10-26	1.00	pcs
170	044362	Front support cover for BioWIN 10-26	1.00	pcs
1460	006900	Fuse 1 A T 5x20 ceramic tube	1.00	pcs
1490	003663	Fuse holder	1.00	pcs

Cladding (A000124)

Item no.	Article no.	Description	Quantity	Unit
1420	016214	Hexagon screw DIN931 M5 x 45, black for BioWIN XL 35-60	1.00	pcs
535	046311	Housing foot InfoWIN cpl. with fastening material for LogWIN Premium 180-505,BioWIN 10-26,SWK-T,BioWIN XL 35-60	1.00	pcs
95	011985	InfoWINplus HW C4 SW V4.10 BioWIN, LWP, JetWIN, EcoWIN	1.00	pcs
670	043928	Insulating plate for BioWIN 10-26	1.00	pcs
1660	044238	Left door completely assembled for BioWIN10-26	1.00	pcs
1250	043533	Left rear wall for BioWIN 10-26	1.00	pcs
1430	044235	Left side panel completely assembled, new ET for BioWIN 10-26	1.00	pcs
1800	043808	Locking arm for control panel for BioWIN 10-26, BioWIN XL 35-60	1.00	pcs
120	016001	Locking screw M5 x 19, galvanised for BioWIN 10-26	1.00	pcs
1500	016728	Locknut M 5, DIN 985, black for BioWIN 10-26, BioWIN XL 35-60	1.00	pcs
995	001759	Magnetic lock No. 246.41 for GKW,NBE,GKX,GWX,GTX,PMX,HMX,FireWIN,VarioWIN, BioWIN 10-26	2.00	pcs
1085	041430	Mains connection socket 3-pin for MIRA,ETX,PMX,BioWIN10-26,LogWIN Premium 180-505,EasyWIN Premium 180,BioWIN XL 35-60, FireWIN	1.00	pcs
660	051541	Modification set BUML TTL to BUML TTL 2Z	1.00	pcs
1030	046131	Module connection PCB, new ET for BioWIN10-26, BioWIN XL 35-60	1.00	pcs
1120	007609	PCB holder	1.00	pcs
755	002059	Power supply cable (not illustrated)	1.00	pcs
595	002050	Power supply unit 002049 holding plate for VarioWIN, FireWIN, BioWIN 10-26, BioWIN XL 35-60, LogWIN Premium 180-505	1.00	pcs
1090	051645	Power supply unit 12V	1.00	pcs
755	002051	Power supply unit cable FRIWO (primary power line) for VarioWIN, FireWIN, BioWIN 10-26, BioWIN XL 35-60, LogWIN Premium 180-505	1.00	pcs

Cladding (A000124)

Item no.	Article no.	Description	Quantity	Unit
330	044221	Rear cover, complete silk grey (RAL7044) for BioWIN 10-26	1.00	pcs
1670	044236	Right door completely assembled for BioWIN 10-26	1.00	pcs
1260	044239	Right rear wall completely assembled for BioWIN 10-26	1.00	pcs
1450	044234	Right side panel completely assembled for BioWIN 10-26	1.00	pcs
1440	044227	Right side panel for reserve supply container for BioWIN10-26	1.00	pcs
1900	005563	Rocker switch SW/GR 0-1	1.00	pcs
1640	046451	Safety thermostat LS1+100/-6, Auger for FireWIN, BioWIN 10-26, BioWIN XL 35-60	1.00	pcs
1000	009540	Spatula	1.00	pcs
790	044360	STB auger tube cable for BioWIN 10-26, BioWIN XL 35-60 * not illustrated	1.00	pcs
1910	041914	Strain relief 4X, complete, assembled for ETX/SNX,PSX,GENIO/MultiWIN, SilvaWIN, BioWIN XL, BioWIN10-26, BioWIN XL 35-60	1.00	pcs
1890	044217	Strain relief bracket for SilvaWIN, BioWIN10-26, BioWIN XL 35-60	1.00	pcs
1300	044244	Switch panel REG for BioWIN 10-26	1.00	pcs
870	009928	Terminal bar	1.00	pcs
220	045207	Touch protection for BioWIN10-26 from batch 30	1.00	pcs
1785	007082	Velvet foils 150x20mm, grey, for cover for BioWIN 10-26	1.00	pcs
1860	040925	Wago terminal block 8-pin blue/grey (230 V) pre-assembled for BioWIN 10-26, BioWIN XL 35-60 (*not illustrated)	1.00	pcs
1810	040926	Wago terminal block 11-pin orange (extra-low voltage) pre-assembled for BioWIN 10-26, BioWIN XL 35-60	1.00	pcs
1850	006720	Wago terminal block 261 1-9, 8-pce. Emergency door switch/probe switching for BioWIN, VarioWIN, FireWIN, BioWIN10-26, BioWIN XL 35	1.00	pcs
1830	006719	Wago terminal block 261 6-pce. heating requirement/probe switching for BioWIN 10-26, BioWIN XL 35-60 (*not illustrated)	1.00	pcs

Cladding (A000124)

Item no.	Article no.	Description	Quantity	Unit
1840	009960	Wago terminal block 261; 8-pin 230V extnd. for VarioWIN, FireWIN, BioWIN10-26, BioWIN XL 35-60 (*not illustrated)	1.00	pcs
1820	009968	Wago terminal block 261; 13-pin orange extra-low voltage (no. 1-13), for VarioWIN, FireWIN, BioWIN 10-26, BioWIN XL 35-60 (*not il	1.00	pcs
460	017094	WERL056 Flat brush 1 1/2" NO. 72753 for FireWIN, VarioWIN, BioWIN10-26, BioWIN XL 35-60	1.00	pcs

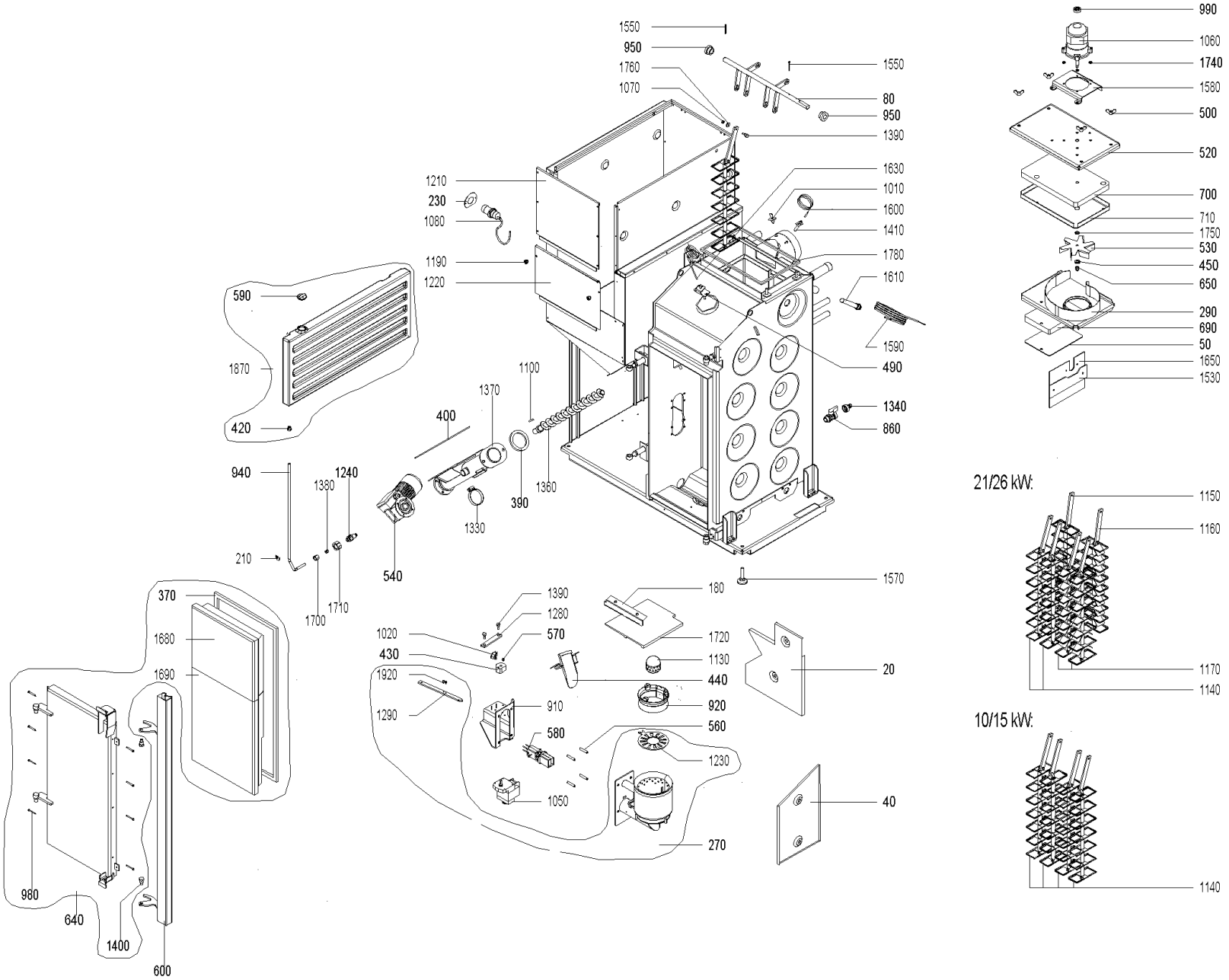
1550
950
1760
1070
1550
80
950
1390
1630
1010
1600
1410
1780
1610
1590
490
1340
860
1210
230
1080
1190
1220
590
1870
420
940
1240
1380
210
1700
1710
400
1370
1100
390
1360
1330
540
1570
180
1720
1130
440
920
560
1230
20
40
270
1390
1280
570
1020
430
1920
1290
910
580
1050
370
1680
1690
980
640
1400
600
990
1060
1740
1580
500
520
700
710
1750
530
450
650
290
690
50
1650
1530
21/26 kW:
1150
1160
1170
1140
10/15 kW:
1140

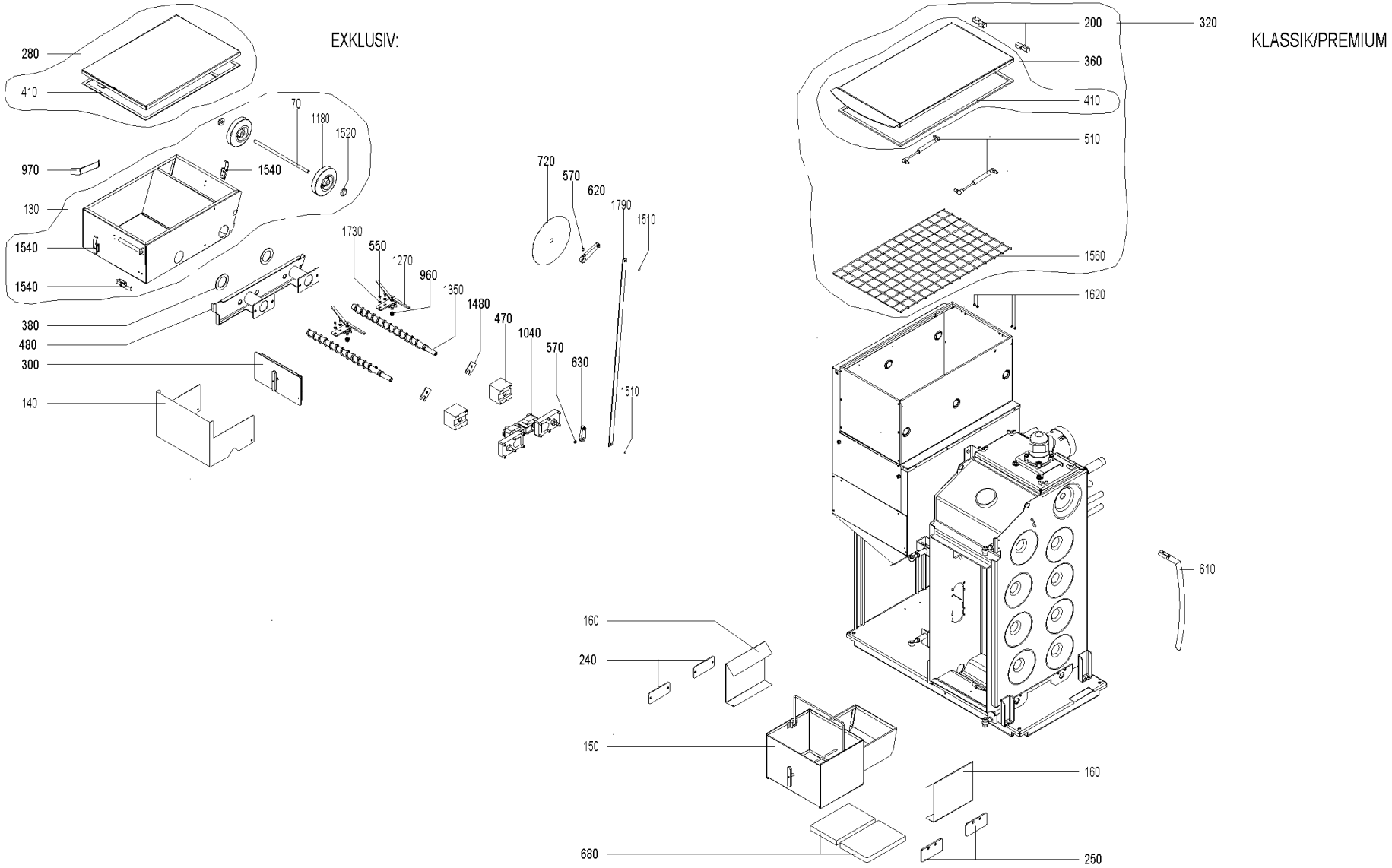
EXKLUSIV:
280
410
70
1180
1520
970
1540
130
1540
1540
380
480
300
140
720
570
620
1790
1510
1730
550
1270
960
1350
1480
470
1040
570
630
1510
KLASSIK/PREMIUM
200
320
360
410
510
1560
1620
610
160
240
150
680
160
250

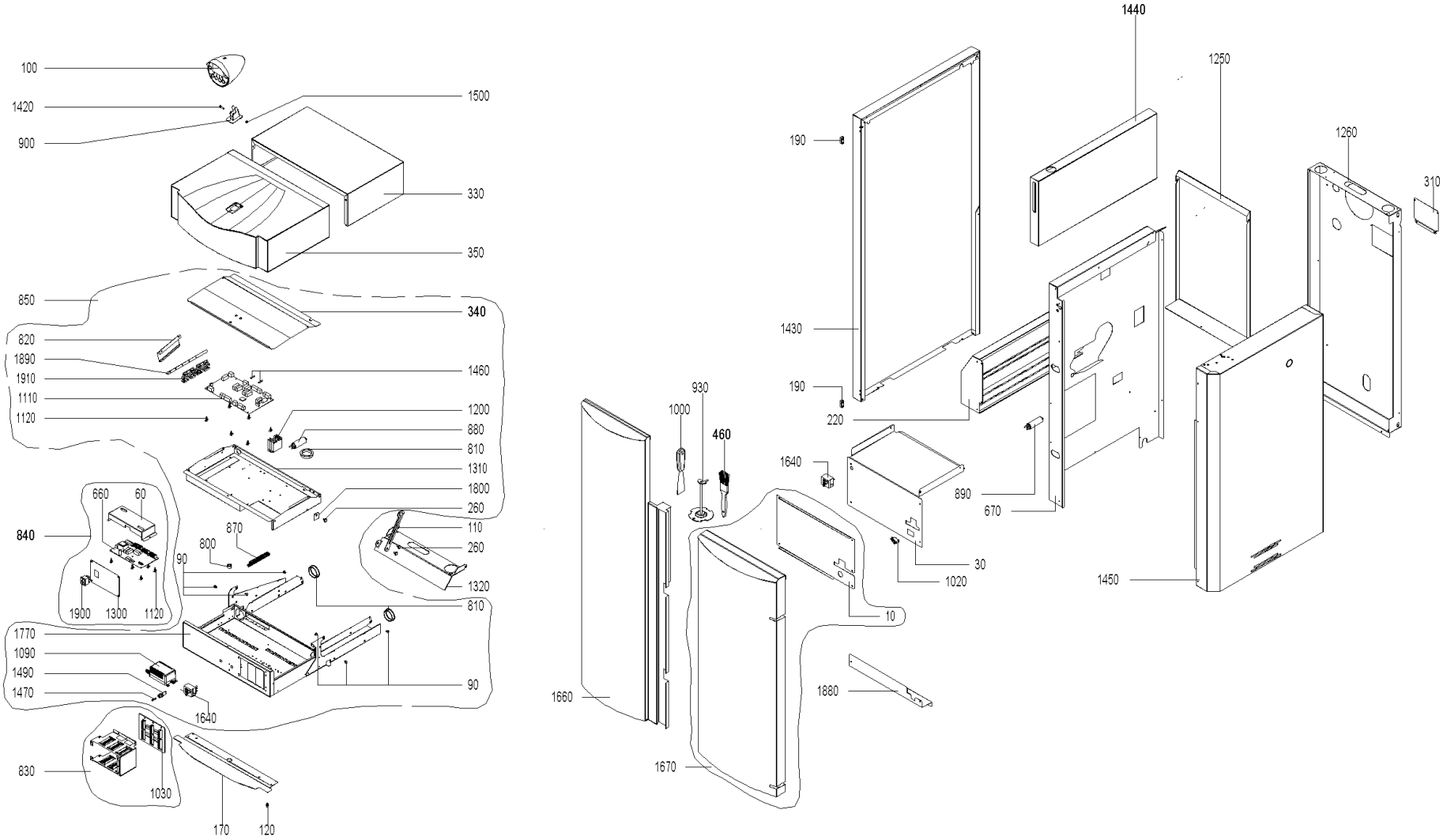
100
1420
900
1500
330
350
850
340
820
1890
1910
1110
1120
1460
1200
880
810
1310
1800
260
110
260
1320
810
660
60
840
870
800
90
1900
1300
1120
1770
1090
1490
1470
1640
90
830
1030
170
120
1440
1250
1260
310
190
1430
190
220
930
1000
460
1640
890
670
30
1020
10
1880
1660
1670
1450

BW_ 210 (BioWIN00+BW_210)

Item no.	Article no.	Description	Quantity	Unit
1470	003228	6.3A fuse (not illustrated)	1.00	pcs
1020	009277	Air control microswitch	1.00	pcs
970	043529	Ash container baffle plate for BioWIN10-26 - Only BioWIN Exklusiv -	1.00	pcs
280	044682	Ash container cover with seal for BioWIN 10-26 - Only BioWIN Exklusiv -	1.00	pcs
130	003080	Ash container cpl. assembled (incl. Cover) for BioWIN 10-26 - Only BioWIN Exklusiv -	1.00	pcs
135	003080	Ash container cpl. assembled (incl. Cover) for BioWIN 10-26 - Only BioWIN Exklusiv -	1.00	pcs
480	045224	Ash container flange, complete painted grey+ seals for BioWIN 10-26 - Only BioWIN Exklusiv -	1.00	pcs
960	006745	Ash conveyor bearing bush	1.00	pcs
380	006843	Ash conveyor seal Ø72x48,3x2mm PMX,BioWIN	1.00	pcs
150	043489	Ash pan complete for BioWIN 10-26 - Only BioWIN Klassik/Premium -	1.00	pcs
140	043325	Ash plate for BioWIN 10-26 - Only BioWIN Exklusiv -	1.00	pcs
1480	043748	Ash removal auger locking plate for BioWIN 10-26 - Only BioWIN Exklusiv -	1.00	pcs
470	044680	Ash removal flange, complete with bearing bushes for BioWIN 10-26 (Only BioWIN Exklusiv), BioWIN XL 35-60	2.00	pcs
1360	041139	Auger, complete for pellets for PMX, BioWIN 10-26	1.00	pcs
1350	043534	Auger for ash removal for BioWIN 10-26 - Only BioWIN Exklusiv -	2.00	pcs
390	006841	Auger tube/boiler seal for PMX, BioWIN 10-26	1.00	pcs
400	006842	Auger tube/reserve supply container seal 178x178x3mm for PMX, BioWIN 10-26, BioWIN XL35-60	1.00	pcs
630	044212	Automatic heating surface cleaning bottom lever, complete for BioWIN 10-26 - Only BioWIN Exklusiv -	1.00	pcs
1790	043460	Automatic heating surface cleaning connection for BioWIN 10-26	1.00	pcs
620	043819	Automatic heating surface cleaning top lever, complete for BioWIN10-26 - Only BioWIN	1.00	pcs

Item no.	Article no.	Description	Quantity	Unit
		Exklusiv -		
70	043523	Axis ash container for BioWIN 10-26 (Only BioWIN Exklusiv), BioWIN XL 35-60	1.00	pcs
80	043771	Axis heating surface cleaning complete - This part is used as spare parts for all types ! - for BioWIN10-26 (except 10/15E)	1.00	pcs
1720	006850	Baffle plate for PMX, BioWIN 10-26	1.00	pcs
190	044677	Bands 96-140 (hinge for left door) with fastening screw for BioWIN 10-26, BioWIN XL 35-60	1.00	pcs
950	006758	Bearing for heating surface cleaning for PMX, BioWIN 10-26	1.00	pcs
965	007125	Bearing for vibrating drive	2.00	pcs
320	503301	BIO039 lid for hopper for BioWIN 10-26 - Only BioWIN Klassik,Exklusiv S -	1.00	pcs
240	041717	Blind flange for ash removal for PMX, BioWIN10-26 - Only BioWIN Klassik/Premium -	1.00	pcs
690	006916	Blower box insulating stone 190 x 139 x 25 SN450 for PMX21/26,BioWIN10-26	1.00	pcs
520	040882	Blower cover for PMX, BioWIN 10-26	1.00	pcs
530	043892	Blower wheel Ø150mm for BioWIN 21/26	1.00	pcs
850	046125	Boiler control panel BioWIN 10-26 from lot 30	1.00	pcs
260	033091	Bolt DIN 1445 - 8h11 x 4 x 10 - St - galvanised for VarioWIN, FireWIN, BioWIN 10-26, BioWIN XL 35-60	1.00	pcs
1690	006805	Bottom door insulating stone 450 x 346 x 80 for BioWIN 10-26	1.00	pcs
1220	043292	Bottom reserve supply container inspection cover for BioWIN10-26	1.00	pcs
1880	043970	Bracket for bottom insulation for BioWIN10-26	1.00	pcs
1240	042510	Burn-back protection completely assembled for PMX, BioWIN 10-26	1.00	pcs
785	053643	Cable - ignition element for BW1, BW2, FireWIN and VarioWIN	1.00	pcs
800	009542	Cable feed-through	1.00	pcs
810	004096	Cable feed-through 2400 black Ø50	1.00	pcs

Item no.	Article no.	Description	Quantity	Unit
770	044659	Cable for auger motor for BioWIN 10-26	1.00	pcs
780	044358	Cable for ignition for BioWIN 10-26	1.00	pcs
750	044359	Cable for motor for heating surface cleaning and ash removal for BioWIN 10-26 - Only BioWIN Klassik -	1.00	pcs
740	045967	Cable for motor shake-out for BioWIN 10-26 from batch 30	1.00	pcs
760	044357	Cable for shaking (012512 Fa. Crouzet) for BioWIN 10-26	1.00	pcs
830	046130	Cable harness for MES control, new ET for BioWIN 10-26, BioWIN XL 35-60	1.00	pcs
840	044671	Cable harness for REG standard control for BioWIN 10-26	1.00	pcs
830	047123	Cable harness MES PLUS BioWIN	1.00	pcs
820	044654	Cable holding plate RAL 7021 for BioWIN 10-26	1.00	pcs
890	007334	Capacitor 8µF for auger motor, MAB MKP8 for PMX21/26, BioWIN 21/26, BioWIN XL 35-60	1.00	pcs
650	025967	Cap nut DIN 1587 - M8 - 6 - galvanised for FAX, FireWIN, VarioWIN, BioWIN 10-26, EasyWIN Klassik/Premium 180	1.00	pcs
1510	016165	Circlip DIN471 - 8 x 0.8 for BioWIN 10-26 (Only BioWIN Exklusiv), BioWIN XL 35-60	1.00	pcs
1530	042369	Clamping plate for PMX21/26, BioWIN 10-26	1.00	pcs
1140	042016	Clearer flat, complete for PMX, BioWIN 10-26	2.00	pcs
1170	042717	Clearer flat, complete front updraft for PMX 21/26, BioWIN21/26	2.00	pcs
1150	042715	Clearer flat, complete rear downdraft for PMX21/26, BioWIN 21/26	1.00	pcs
1160	042716	Clearer flat, complete rear updraft for PMX21/26, BioWIN21/26	1.00	pcs
90	016006	Collar screw M4 x 11.8 mm, galvanised for BioWIN 10-26,BioWIN XL 35-60	1.00	pcs
370	043827	Comb. chamber door sealing cord, fibreglass packing 16 x 10 mm x 2.17 m for BioWIN 10-26	1.00	pcs
730	044361	Combustion chamber door switch cable for BioWIN 10-26	1.00	pcs
490	043756	Combustion chamber sensor flange for BioWIN10-26, BioWIN XL 35-60	1.00	pcs

BW_ 210 (BioWIN00+BW_210)

Item no.	Article no.	Description	Quantity	Unit
880	007330	Condenser for motor MAB 500V, 3µF for HMX,PMX,SWK,BioWIN10-26,FireWIN,VarioWIN,BioWIN XL 35-60, EasyWIN Premium 180,LogWIN Premiu	1.00	pcs
920	006911	Cone top part/cone for PMX 21/26, BioWIN21/26	1.00	pcs
1770	044223	Control panel bottom part complete, coated for BioWINT 10-26, BioWIN XL 35-60	1.00	pcs
340	042998	Control panel cover for BioWIN 10-26, SilvaWIN, BioWIN XL 35-60	1.00	pcs
1320	043437	Control panel fixed part hinge for BioWIN 10-26	1.00	pcs
110	044218	Control panel lock arm for BioWIN10-26	1.00	pcs
1310	043807	Control panel top part for BioWIN 10-26, SWK, BioWIN XL35-60	1.00	pcs
1200	045087	Conversion kit relay	1.00	pcs
940	043458	Copper cable for burn-back protection for BioWIN 10-26	1.00	pcs
60	051690	Cover BUML incl. Sticker	1.00	pcs
300	043477	Cover for bottom coasting surface, complete for BioWIN 10-26 - Only BioWIN Exklusiv -	1.00	pcs
290	040895	Cover for coasting surface for BioWIN10-26, PMX	1.00	pcs
50	042375	Cover for insulating stone/blower box for PMX 210/260, BioWIN 10-26	1.00	pcs
310	041539	Cover for rear wall for PMX, BioWIN 10-26	1.00	pcs
1380	006378	Cutting ring DL8 07-151	1.00	pcs
1935	033531	Cylinder-head screw, hexagon socket ISO 4762 - M6x10 - 8.8 - (DIN 912) for VarioWIN, BioWIN 10-26	1.00	pcs
1940	020117	Cylinder-head screw, hexagon socket ISO 4762 - M12x25 - 8.8 - galva. (DIN 912) for VarioWIN, FireWIN, BioWIN10-26, LogWIN Premium	1.00	pcs
980	016719	Cylinder drilling screw 4.2 x 38 DIN7504	1.00	pcs
1920	033528	Cylinder screw M 4 x 6 - 8.8	1.00	pcs
1930	016780	Cylinder screw M4x12 DIN 7985	2.00	pcs

BW_ 210 (BioWIN00+BW_210)

Item no.	Article no.	Description	Quantity	Unit
270	044233	de: Brenner kpl. BioWIN 21/26 bis Los 29	1.00	pcs
100	048075	de: InfoWIN-SET für BioWIN10-26 bis SN: 834999	1.00	pcs
930	042421	de: Konusheber PMX210/260,BioWIN210/260 bis Los 29	1.00	pcs
1230	041730	de: Rostplatte oben BioWIN 21/26 bis Los 29	1.00	pcs
1730	018309	Disc 5 DIN134	1.00	pcs
1760	031753	Disc 6 ISO 7093	1.00	pcs
1620	009993	Disc plug T1A Ø5.7 transparent for BioWIN 10-26	1.00	pcs
440	042106	Down chute for pellets for PMX210/260,BioWIN21-26	1.00	pcs
1405	045232	Driving rod, complete for BioWIN10-26 à partir de lot 30 , FireWIn à partir de lot 10, VarioWIN	1.00	pcs
430	006010	Eccentric vibration BioWIN, FireWIN	1.00	pcs
740	044777	End switch cable of grate shakings BioWIN 10-26	1.00	pcs
210	006603	Fastening clamp Ø8, DIN 72571, Typ 604 for BioWIN 10-26	1.00	pcs
1100	006766	Feather key, without tightening DIN6885 A 6x6x28 mm for PMX, BioWIN10-26, FireWIN, VarioWIN, BioWIN XL 35-60	1.00	pcs
420	007074	Feed-through grommet DH 80/115/80 for BioWIN 10-15	1.00	pcs
415	045229	Feed-through seal for lever for BioWIN 10-26 from batch 30	1.00	pcs
10	043884	Filling door cover plate for BioWIN 10-26	1.00	pcs
485	017001	Flanged nut M5 for BioWIN 10-26, BioWIN XL 35-60	1.00	pcs
30	043971	Front boiler cover plate for BioWIN10-26	1.00	pcs
350	044220	Front cover, complete for BioWIN 10-26	1.00	pcs
170	044362	Front support cover for BioWIN 10-26	1.00	pcs
1460	006900	Fuse 1 A T 5x20 ceramic tube	1.00	pcs

Item no.	Article no.	Description	Quantity	Unit
1490	003663	Fuse holder	1.00	pcs
510	012600	Gas spring 4534DS 0100 N	2.00	pcs
540	044664	Geared motor for auger 7,8 RPM, pluggable conversion instructions for use are enclosed by PMX21/26 for BioWIN 21/26, BioWIN XL 35-	1.00	pcs
590	007073	Grip plug GPN310 G30 SW for water reservoir for BioWIN 10-26	1.00	pcs
640	044684	Heating door, complete for BioWIN 10-26	1.00	pcs
600	043546	Heating door handle, complete coated red for BioWIN 10-26	1.00	pcs
610	044248	Heating surface cleaning hand lever RAL7021 for BioWIN 10-26 - Only BioWIN Klassik/Premium -	1.00	pcs
720	043929	Heating surface cleaning insulation protection Ø220 x Ø18,2 x 1 galvanised for BioWIN 10-26 - Only BioWIN Exklusiv -	1.00	pcs
1420	016214	Hexagon screw DIN931 M5 x 45, black for BioWIN XL 35-60	1.00	pcs
550	031545	Hexagon screw M5x12 DIN 7500 (not ilustrated)	1.00	pcs
1330	006905	Hose clip 50-70/9 C71 for PMX, BioWIN 10-26	1.00	pcs
1340	004386	Hose grommet, union nut and seal for KFE ball valve for BioWIN 10-26, BioWIN XL 35-60,LogWIN Premium 180-505	1.00	pcs
535	046311	Housing foot InfoWIN cpl. with fastening material for LogWIN Premium 180-505,BioWIN 10-26,SWK-T,BioWIN XL 35-60	1.00	pcs
580	055201	Ignition element BioWIN10-26, FireWIN from lot 15, VarioWIN from lot 15 BioWIN XL, LWK	1.00	pcs
580	053851	Ignition element with cable	1.00	pcs
900	043964	InfoWIN bracket for SilvaWIN,BioWIN	1.00	pcs
95	011985	InfoWINplus HW C4 SW V4.10 BioWIN, LWP, JetWIN, EcoWIN	1.00	pcs
1403	045223	Inner driving rod for BioWIN 10-26 from batch 30, VarioWIN, FireWIN	1.00	pcs
670	043928	Insulating plate for BioWIN 10-26	1.00	pcs

Item no.	Article no.	Description	Quantity	Unit
680	006917	Insulating stone for rear floor 225 x 155 x 25 for PMX21/26, BioWIN 10-26 (Only BioWIN Klassik/Premium)	2.00	pcs
700	006770	Insulation for blower cover RBP-9 (313x194x30) for PMX, BioWIN10-26	1.00	pcs
710	040887	Insulation support for blower cover for PMX, BioWIN 10-26	1.00	pcs
1580	044007	Jet protection plate for blower motor for BioWIN 10-26, SilvaWIN	1.00	pcs
860	004385	KFE cock	1.00	pcs
1190	007655	Knurled nut with through-hole thread M5 SW for VarioWIN, FireWIN,BioWIN10-26	1.00	pcs
160	043493	Left/right ash baffle plate for BioWIN 10-26 - Only BioWIN Klassik/Premium -	1.00	pcs
1660	044238	Left door completely assembled for BioWIN10-26	1.00	pcs
1250	043533	Left rear wall for BioWIN 10-26	1.00	pcs
1430	044235	Left side panel completely assembled, new ET for BioWIN 10-26	1.00	pcs
1570	009990	Leg M10 x 40	1.00	pcs
1875	045216	Limit switch bracket for BioWIN 10-26 from batch 30, VarioWIN, FireWIN	1.00	pcs
1800	043808	Locking arm for control panel for BioWIN 10-26, BioWIN XL 35-60	1.00	pcs
120	016001	Locking screw M5 x 19, galvanised for BioWIN 10-26	1.00	pcs
1500	016728	Locknut M 5, DIN 985, black for BioWIN 10-26, BioWIN XL 35-60	1.00	pcs
990	007304	Magnet, complete, glued for motor for PMX, HMX from lot 24, BioWIN 10-26	1.00	pcs
995	001759	Magnetic lock No. 246.41 for GKW,NBE,GKX,GWX,GTX,PMX,HMX,FireWIN,VarioWIN, BioWIN 10-26	2.00	pcs
1085	041430	Mains connection socket 3-pin for MIRA,ETX,PMX,BioWIN10-26,LogWIN Premium 180-505,EasyWIN Premium 180,BioWIN XL 35-60, FireWIN	1.00	pcs
1010	020035	Measuring hole plug for BioWIN 10-26	1.00	pcs
1600	006820	MES007 Immersion sensor (exhaust gas sensor) Pt 1000 for PMX, FireWIN, VarioWIN, BioWIN 10-26, BioWIN XL 35-60	1.00	pcs

BW_ 210 (BioWIN00+BW_210)

Item no.	Article no.	Description	Quantity	Unit
1590	502186	MES009M Immersion sensor	1.00	pcs
1270	043816	Mixer, complete painted grey for BioWIN XL 35-60, BioWIN 10-26 (Only BioWIN Exklusiv)	1.00	pcs
660	051541	Modification set BUML TTL to BUML TTL 2Z	1.00	pcs
1030	046131	Module connection PCB, new ET for BioWIN10-26, BioWIN XL 35-60	1.00	pcs
1040	044665	Motor	1.00	pcs
1060	044666	Motor for blower, ET new Conversion instructions for use with PMX 15-26 are enclosed! for BioWIN 10-26	1.00	pcs
1070	016596	Nut DIN 934 - M6 - A2 for VarioWIN, FireWIN, BioWIN10-26, BioWIN XL 35-60	1.00	pcs
1610	005452	OK-915 Immersion sleeve (129 mm) No.55501.04 for EKX,OK/E,GWX,KSN,ZHN,OK-915,ETX,SNX,FKX,MIRA,FireWIN,VestoWIN Klassik 170-220,	1.00	pcs
65	046214	Partition plate cover cpl. for BioWIN 10-26	1.00	pcs
1035	046214	Partition plate cover cpl. for BioWIN 10-26	1.00	pcs
1650	042368	Partition plate for PMX21/26,BioWIN10-26	1.00	pcs
1110	012002	PCB, FMP BW2 to SN: 829999	1.00	pcs
1120	007609	PCB holder	1.00	pcs
230	044656	Plate fill level switch for BioWIN 10-26	1.00	pcs
595	002050	Power supply unit 002049 holding plate for VarioWIN, FireWIN, BioWIN 10-26, BioWIN XL 35-60, LogWIN Premium 180-505	1.00	pcs
1090	051645	Power supply unit 12V	1.00	pcs
755	002051	Power supply unit cable FRIWO (primary power line) for VarioWIN, FireWIN, BioWIN 10-26, BioWIN XL 35-60, LogWIN Premium 180-505	1.00	pcs
1130	047774	Primary air pin for BioWIN10-26 FireWIN bis Los9 und PMX 21-26	1.00	pcs
1410	041498	Protective tube for exhaust gas sensor	1.00	pcs
1082	009342	Proximity switch, inductive M8x1 for VarioWIN, FireWIN, BioWIN 10-26	1.00	pcs

Item no.	Article no.	Description	Quantity	Unit
1080	007821	Proximity switch EC 3025 NPAPL	1.00	pcs
330	044221	Rear cover, complete silk grey (RAL7044) for BioWIN 10-26	1.00	pcs
20	041250	Rear cover plate for PMX, BioWIN10-26	1.00	pcs
360	044678	Reserve supply container cover, complete with seal, silk grey for BioWIN 10-26 - Only BioWIN Klassik -	1.00	pcs
1805	045586	Reserve supply container for pellets for BioWIN 10-26	1.00	pcs
250	043752	Right blind flange, for ash removal for BioWIN 10-26 - Only BioWIN Klassik/Premium -	1.00	pcs
40	041251	Right cover plate for PMX, BioWIN 10-26	1.00	pcs
1670	044236	Right door completely assembled for BioWIN 10-26	1.00	pcs
1260	044239	Right rear wall completely assembled for BioWIN 10-26	1.00	pcs
1450	044234	Right side panel completely assembled for BioWIN 10-26	1.00	pcs
1440	044227	Right side panel for reserve supply container for BioWIN10-26	1.00	pcs
1900	005563	Rocker switch SW/GR 0-1	1.00	pcs
1640	046451	Safety thermostat LS1+100/-6, Auger for FireWIN, BioWIN 10-26, BioWIN XL 35-60	1.00	pcs
1400	009219	Screw door handle bearing M12 (WAF17/30) - galvanised for HMX, BioWIN10-26, FireWIN, VarioWIN, EasyWIN Klassik/Premium 180	1.00	pcs
1395	045076	Screw M6 (with U-washer and nut) for heating surface cleaning complete for PMX, BioWIN10-26, FireWIN, VarioWIN	1.00	pcs
1390	006756	Screw M6 for heating surface cleaning for PMX,BioWIN 10-26,FireWIN, BioWIN XL 35-60, LogWIN Premium 180-505	1.00	pcs
1780	048837	Seal	1.00	pcs
380	046455	Seal ash container (2pieces 190xØ10mm) for BioWIN 10-26	1.00	pcs
1370	042679	Sealed auger tube, new ET for PMX, BioWIN 10-26	1.00	pcs
410	000047	Sealing band 12x4mm SK for GMX,GENIO/MultiWIN,XENTA,BioWIN 10-26 (Only BioWIN	2.20	m

Item no.	Article no.	Description	Quantity	Unit
		Klassik), VarioWIN, FireWIN		
385	016162	Seal Thermocontrol sensor (temperature sensor), 3/4" (38x27x3mm) for BioWIN 10-26	1.00	pcs
560	016163	Setscrew DIN913 - M8 x 40-A2 for BioWIN 10-26	1.00	pcs
570	033112	Setscrew M8x10 DIN916	1.00	pcs
1050	012512	Shake-out motor	1.00	pcs
1280	042536	Shaker lever 1 PMX 21/26, BioWIN 10-26, FireWIN	1.00	pcs
1290	042103	Shaker lever 2 PMX21/26,BioWIN10-26	1.00	pcs
910	041734	Shaker motor bracket BioWIN 10-26	1.00	pcs
1915	017048	Shoulder screw M8 10x25 ISO 7379	1.00	pcs
200	044802	Southco hinge	1.00	pcs
1000	009540	Spatula	1.00	pcs
1550	017981	Split pin DIN 94, 4 x 32 galvanised for BioWIN 10-26, VestoWIN Klassik 170-220	1.00	pcs
1540	009546	Spring lock	1.00	pcs
450	017922	Spring washer DIN 127B, M8 galvanised for BioWIN 10-26, EasyWIN Premium 180	1.00	pcs
790	044360	STB auger tube cable for BioWIN 10-26, BioWIN XL 35-60 * not illustrated	1.00	pcs
1560	007239	Steel mesh (galvanised wire mesh 646 x 394 x 4) for BioWIN 10-26 - Only BioWIN Klassik -	1.00	pcs
1910	041914	Strain relief 4X, complete, assembled for ETX/SNX,PSX,GENIO/MultiWIN, SilvaWIN, BioWIN XL, BioWIN10-26, BioWIN XL 35-60	1.00	pcs
1890	044217	Strain relief bracket for SilvaWIN, BioWIN10-26, BioWIN XL 35-60	1.00	pcs
180	041249	Support rail for baffle plate for PMX, BioWIN 10-26	1.00	pcs
1300	044244	Switch panel REG for BioWIN 10-26	1.00	pcs
870	009928	Terminal bar	1.00	pcs
1630	007626	Thermocouple	1.00	pcs

BW_ 210 (BioWIN00+BW_210)

Item no.	Article no.	Description	Quantity	Unit
1680	006725	Top door insulating stone 346 x 290.5 x 80 for BioWIN 10-26	1.00	pcs
1210	043291	Top reserve supply container inspection cover for BioWIN10-26	1.00	pcs
220	045207	Touch protection for BioWIN10-26 from batch 30	1.00	pcs
1710	013749	Union nut 3/8"	1.00	pcs
1700	006351	Union nut ML8 GV	1.00	pcs
1785	007082	Velvet foils 150x20mm, grey, for cover for BioWIN 10-26	1.00	pcs
1860	040925	Wago terminal block 8-pin blue/grey (230 V) pre-assembled for BioWIN 10-26, BioWIN XL 35-60 (*not illustrated)	1.00	pcs
1810	040926	Wago terminal block 11-pin orange (extra-low voltage) pre-assembled for BioWIN 10-26, BioWIN XL 35-60	1.00	pcs
1850	006720	Wago terminal block 261 1-9, 8-pce. Emergency door switch/probe switching for BioWIN, VarioWIN, FireWIN, BioWIN10-26, BioWIN XL 35	1.00	pcs
1830	006719	Wago terminal block 261 6-pce. heating requirement/probe switching for BioWIN 10-26, BioWIN XL 35-60 (*not illustrated)	1.00	pcs
1840	009960	Wago terminal block 261; 8-pin 230V extnd. for VarioWIN, FireWIN, BioWIN10-26, BioWIN XL 35-60 (*not illustrated)	1.00	pcs
1820	009968	Wago terminal block 261; 13-pin orange extra-low voltage (no. 1-13), for VarioWIN, FireWIN, BioWIN 10-26, BioWIN XL 35-60 (*not il	1.00	pcs
1750	024767	Washer DIN 125 - M8 - galvanised, ISO 7089 for VarioWIN, BioWIN 10-26, BioWIN XL 35-60, EasyWIN Premium 180	1.00	pcs
1740	020397	Washer M6, DIN125, polyamide, 6.6 for BioWIN 10-26,BioWIN XL 35-60	1.00	pcs
1520	006889	Washer Ø12	1.00	pcs
1870	007070	Water tank for BioWIN 10-26	1.00	pcs
460	017094	WERL056 Flat brush 1 1/2" NO. 72753 for FireWIN, VarioWIN, BioWIN10-26, BioWIN XL 35-60	1.00	pcs
1180	006888	Wheel AG 125-12	1.00	pcs

BW_ 210 (BioWIN00+BW_210)

Item no.	Article no.	Description	Quantity	Unit
500	007366	Wing nut M8	1.00	pcs

Ash conveyor (A000123)

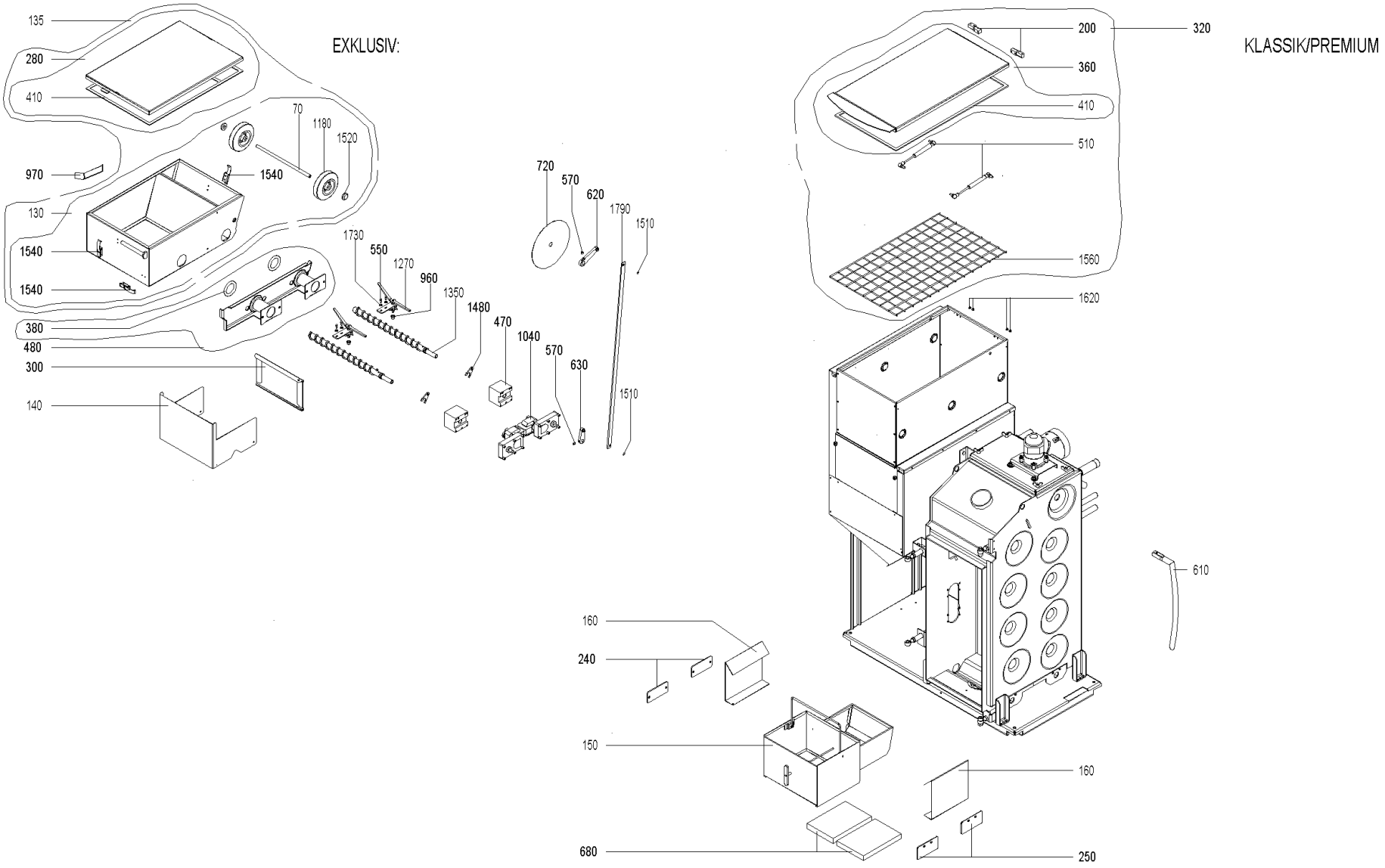

28.10.2016

Ash conveyor (A000123)

Item no.	Article no.	Description	Quantity	Unit
970	043529	Ash container baffle plate for BioWIN10-26 - Only BioWIN Exklusiv -	1.00	pcs
280	044682	Ash container cover with seal for BioWIN 10-26 - Only BioWIN Exklusiv -	1.00	pcs
130	003080	Ash container cpl. assembled (incl. Cover) for BioWIN 10-26 - Only BioWIN Exklusiv -	1.00	pcs
135	003080	Ash container cpl. assembled (incl. Cover) for BioWIN 10-26 - Only BioWIN Exklusiv -	1.00	pcs
480	045224	Ash container flange, complete painted grey+ seals for BioWIN 10-26 - Only BioWIN Exklusiv -	1.00	pcs
960	006745	Ash conveyor bearing bush	1.00	pcs
380	006843	Ash conveyor seal Ø72x48,3x2mm PMX,BioWIN	1.00	pcs
150	043489	Ash pan complete for BioWIN 10-26 - Only BioWIN Klassik/Premium -	1.00	pcs
140	043325	Ash plate for BioWIN 10-26 - Only BioWIN Exklusiv -	1.00	pcs
1480	043748	Ash removal auger locking plate for BioWIN 10-26 - Only BioWIN Exklusiv -	1.00	pcs
470	044680	Ash removal flange, complete with bearing bushes for BioWIN 10-26 (Only BioWIN Exklusiv), BioWIN XL 35-60	2.00	pcs
1350	043534	Auger for ash removal for BioWIN 10-26 - Only BioWIN Exklusiv -	2.00	pcs
630	044212	Automatic heating surface cleaning bottom lever, complete for BioWIN 10-26 - Only BioWIN Exklusiv -	1.00	pcs
1790	043460	Automatic heating surface cleaning connection for BioWIN 10-26	1.00	pcs
620	043819	Automatic heating surface cleaning top lever, complete for BioWIN10-26 - Only BioWIN Exklusiv -	1.00	pcs
70	043523	Axis ash container for BioWIN 10-26 (Only BioWIN Exklusiv), BioWIN XL 35-60	1.00	pcs
320	503301	BIO039 lid for hopper for BioWIN 10-26 - Only BioWIN Klassik,Exklusiv S -	1.00	pcs
240	041717	Blind flange for ash removal for PMX, BioWIN10-26 - Only BioWIN Klassik/Premium -	2.00	pcs
1510	016165	Circlip DIN471 - 8 x 0.8 for BioWIN 10-26 (Only BioWIN Exklusiv), BioWIN XL 35-60	1.00	pcs
300	043477	Cover for bottom coasting surface, complete for BioWIN 10-26 - Only BioWIN Exklusiv -	1.00	pcs

Ash conveyor (A000123)

Item no.	Article no.	Description	Quantity	Unit
1730	018309	Disc 5 DIN134	1.00	pcs
1620	009993	Disc plug T1A Ø5.7 transparent for BioWIN 10-26	1.00	pcs
510	012600	Gas spring 4534DS 0100 N	2.00	pcs
610	044248	Heating surface cleaning hand lever RAL7021 for BioWIN 10-26 - Only BioWIN Klassik/Premium -	1.00	pcs
720	043929	Heating surface cleaning insulation protection Ø220 x Ø18,2 x 1 galvanised for BioWIN 10-26 - Only BioWIN Exklusiv -	1.00	pcs
550	031545	Hexagon screw M5x12 DIN 7500 (not ilustrated)	1.00	pcs
680	006917	Insulating stone for rear floor 225 x 155 x 25 for PMX21/26, BioWIN 10-26 (Only BioWIN Klassik/Premium)	2.00	pcs
160	043493	Left/right ash baffle plate for BioWIN 10-26 - Only BioWIN Klassik/Premium -	2.00	pcs
1270	043816	Mixer, complete painted grey for BioWIN XL 35-60, BioWIN 10-26 (Only BioWIN Exklusiv)	1.00	pcs
1040	044665	Motor	1.00	pcs
360	044678	Reserve supply container cover, complete with seal, silk grey for BioWIN 10-26 - Only BioWIN Klassik -	1.00	pcs
250	043752	Right blind flange, for ash removal for BioWIN 10-26 - Only BioWIN Klassik/Premium -	2.00	pcs
380	046455	Seal ash container (2pieces 190xØ10mm) for BioWIN 10-26	1.00	pcs
410	000047	Sealing band 12x4mm SK for GMX,GENIO/MultiWIN,XENTA,BioWIN 10-26 (Only BioWIN Klassik), VarioWIN, FireWIN	2.20	m
570	033112	Setscrew M8x10 DIN916	1.00	pcs
200	044802	Southco hinge	2.00	pcs
1540	009546	Spring lock	1.00	pcs
1560	007239	Steel mesh (galvanised wire mesh 646 x 394 x 4) for BioWIN 10-26 - Only BioWIN Klassik -	1.00	pcs
1520	006889	Washer Ø12	1.00	pcs

Ash conveyor (A000123)

Item no.	Article no.	Description	Quantity	Unit
1180	006888	Wheel AG 125-12	1.00	pcs

Boiler (A000122)

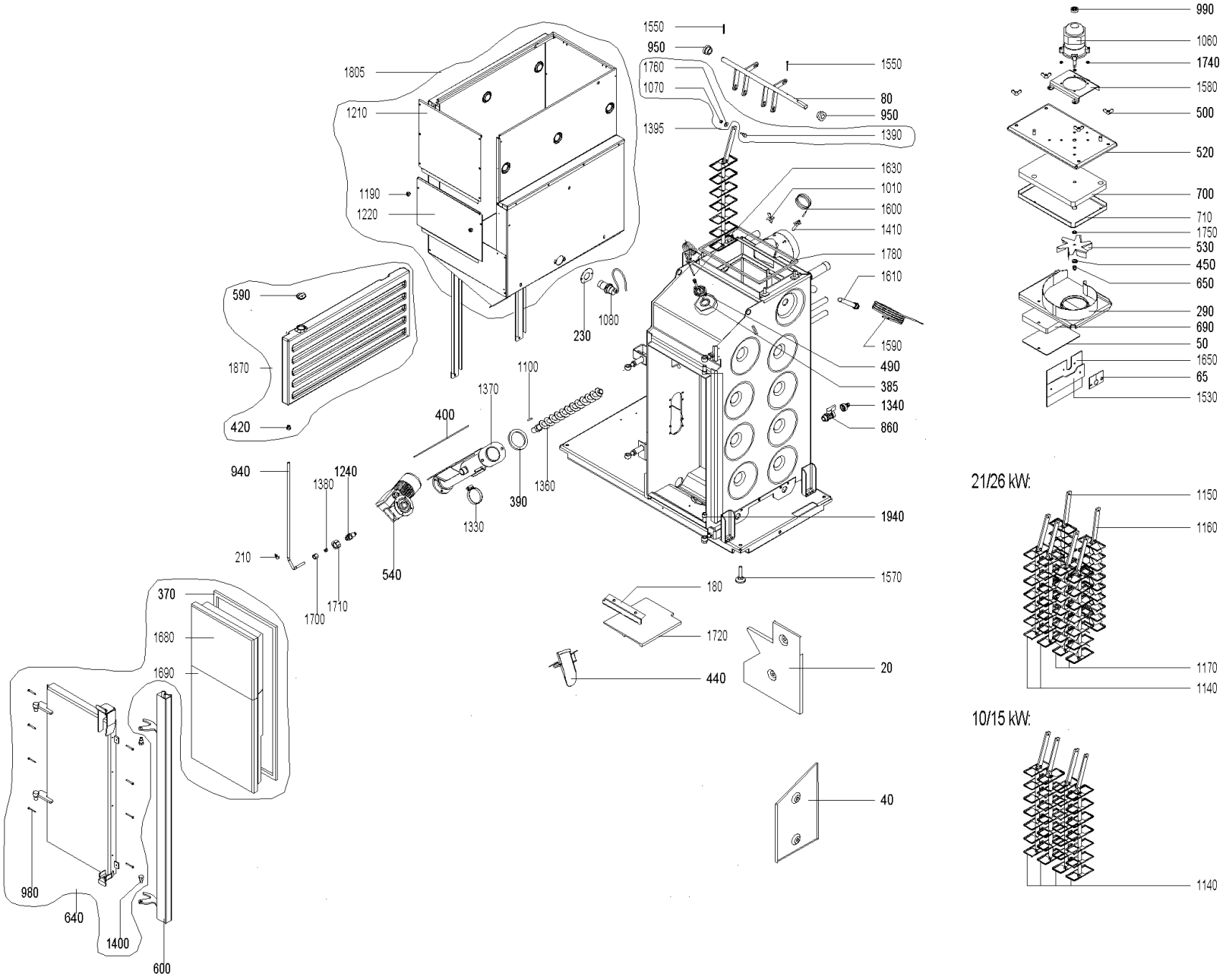

Boiler (A000122)

Item no.	Article no.	Description	Quantity	Unit
1360	041139	Auger, complete for pellets for PMX, BioWIN 10-26	1.00	pcs
390	006841	Auger tube/boiler seal for PMX, BioWIN 10-26	1.00	pcs
400	006842	Auger tube/reserve supply container seal 178x178x3mm for PMX, BioWIN 10-26, BioWIN XL35-60	1.00	pcs
80	043771	Axis heating surface cleaning complete - This part is used as spare parts for all types ! - for BioWIN10-26 (except 10/15E)	1.00	pcs
1720	006850	Baffle plate for PMX, BioWIN 10-26	1.00	pcs
950	006758	Bearing for heating surface cleaning for PMX, BioWIN 10-26	1.00	pcs
690	006916	Blower box insulating stone 190 x 139 x 25 SN450 for PMX21/26,BioWIN10-26	1.00	pcs
520	040882	Blower cover for PMX, BioWIN 10-26	1.00	pcs
530	043892	Blower wheel Ø150mm for BioWIN 21/26	1.00	pcs
1690	006805	Bottom door insulating stone 450 x 346 x 80 for BioWIN 10-26	1.00	pcs
1220	043292	Bottom reserve supply container inspection cover for BioWIN10-26	1.00	pcs
1240	042510	Burn-back protection completely assembled for PMX, BioWIN 10-26	1.00	pcs
650	025967	Cap nut DIN 1587 - M8 - 6 - galvanised for FAX, FireWIN, VarioWIN, BioWIN 10-26, EasyWIN Klassik/Premium 180	1.00	pcs
1530	042369	Clamping plate for PMX21/26, BioWIN 10-26	1.00	pcs
1140	042016	Clearer flat, complete for PMX, BioWIN 10-26	2.00	pcs
1170	042717	Clearer flat, complete front updraft for PMX 21/26, BioWIN21/26	2.00	pcs
1150	042715	Clearer flat, complete rear downdraft for PMX21/26, BioWIN 21/26	2.00	pcs
1160	042716	Clearer flat, complete rear updraft for PMX21/26, BioWIN21/26	2.00	pcs
370	043827	Comb. chamber door sealing cord, fibreglass packing 16 x 10 mm x 2.17 m for BioWIN 10-26	1.00	pcs
490	043756	Combustion chamber sensor flange for BioWIN10-26, BioWIN XL 35-60	1.00	pcs

Boiler (A000122)

Item no.	Article no.	Description	Quantity	Unit
940	043458	Copper cable for burn-back protection for BioWIN 10-26	1.00	pcs
290	040895	Cover for coasting surface for BioWIN10-26, PMX	1.00	pcs
50	042375	Cover for insulating stone/blower box for PMX 210/260, BioWIN 10-26	1.00	pcs
1380	006378	Cutting ring DL8 07-151	1.00	pcs
1940	020117	Cylinder-head screw, hexagon socket ISO 4762 - M12x25 - 8.8 - galva. (DIN 912) for VarioWIN, FireWIN, BioWIN10-26, LogWIN Premium	1.00	pcs
980	016719	Cylinder drilling screw 4.2 x 38 DIN7504	1.00	pcs
1760	031753	Disc 6 ISO 7093	1.00	pcs
440	042106	Down chute for pellets for PMX210/260,BioWIN21-26	1.00	pcs
210	006603	Fastening clamp Ø8, DIN 72571, Typ 604 for BioWIN 10-26	1.00	pcs
1100	006766	Feather key, without tightening DIN6885 A 6x6x28 mm for PMX, BioWIN10-26, FireWIN, VarioWIN, BioWIN XL 35-60	1.00	pcs
420	007074	Feed-through grommet DH 80/115/80 for BioWIN 10-15	1.00	pcs
540	044664	Geared motor for auger 7,8 RPM, pluggable conversion instructions for use are enclosed by PMX21/26 for BioWIN 21/26, BioWIN XL 35-	1.00	pcs
590	007073	Grip plug GPN310 G30 SW for water reservoir for BioWIN 10-26	1.00	pcs
640	044684	Heating door, complete for BioWIN 10-26	1.00	pcs
600	043546	Heating door handle, complete coated red for BioWIN 10-26	1.00	pcs
1330	006905	Hose clip 50-70/9 C71 for PMX, BioWIN 10-26	1.00	pcs
1340	004386	Hose grommet, union nut and seal for KFE ball valve for BioWIN 10-26, BioWIN XL 35-60,LogWIN Premium 180-505	1.00	pcs
700	006770	Insulation for blower cover RBP-9 (313x194x30) for PMX, BioWIN10-26	1.00	pcs
710	040887	Insulation support for blower cover for PMX, BioWIN 10-26	1.00	pcs
1580	044007	Jet protection plate for blower motor for BioWIN 10-26, SilvaWIN	1.00	pcs

Boiler (A000122)

Item no.	Article no.	Description	Quantity	Unit
860	004385	KFE cock	1.00	pcs
1190	007655	Knurled nut with through-hole thread M5 SW for VarioWIN, FireWIN,BioWIN10-26	1.00	pcs
1570	009990	Leg M10 x 40	4.00	pcs
990	007304	Magnet, complete, glued for motor for PMX, HMX from lot 24, BioWIN 10-26	1.00	pcs
1010	020035	Measuring hole plug for BioWIN 10-26	1.00	pcs
1600	006820	MES007 Immersion sensor (exhaust gas sensor) Pt 1000 for PMX, FireWIN, VarioWIN, BioWIN 10-26, BioWIN XL 35-60	1.00	pcs
1590	502186	MES009M Immersion sensor	1.00	pcs
1060	044666	Motor for blower, ET new Conversion instructions for use with PMX 15-26 are enclosed! for BioWIN 10-26	1.00	pcs
1070	016596	Nut DIN 934 - M6 - A2 for VarioWIN, FireWIN, BioWIN10-26, BioWIN XL 35-60	1.00	pcs
1610	005452	OK-915 Immersion sleeve (129 mm) No.55501.04 for EKX,OK/E,GWX,KSN,ZHN,OK-915,ETX,SNX,FKX,MIRA,FireWIN,VestoWIN Klassik 170-220,	1.00	pcs
65	046214	Partition plate cover cpl. for BioWIN 10-26	1.00	pcs
1650	042368	Partition plate for PMX21/26,BioWIN10-26	1.00	pcs
230	044656	Plate fill level switch for BioWIN 10-26	1.00	pcs
1410	041498	Protective tube for exhaust gas sensor	1.00	pcs
1080	007821	Proximity switch EC 3025 NPAPL	1.00	pcs
20	041250	Rear cover plate for PMX, BioWIN10-26	1.00	pcs
1805	045586	Reserve supply container for pellets for BioWIN 10-26	1.00	pcs
40	041251	Right cover plate for PMX, BioWIN 10-26	1.00	pcs
1400	009219	Screw door handle bearing M12 (WAF17/30) - galvanised for HMX, BioWIN10-26, FireWIN, VarioWIN, EasyWIN Klassik/Premium 180	1.00	pcs
1395	045076	Screw M6 (with U-washer and nut) for heating surface cleaning complete for PMX,	1.00	pcs

Boiler (A000122)

Item no.	Article no.	Description	Quantity	Unit
		BioWIN10-26, FireWIN, VarioWIN		
1390	006756	Screw M6 for heating surface cleaning for PMX,BioWIN 10-26,FireWIN, BioWIN XL 35-60, LogWIN Premium 180-505	1.00	pcs
1780	048837	Seal	1.00	pcs
1370	042679	Sealed auger tube, new ET for PMX, BioWIN 10-26	1.00	pcs
385	016162	Seal Thermocontrol sensor (temperature sensor), 3/4" (38x27x3mm) for BioWIN 10-26	1.00	pcs
1550	017981	Split pin DIN 94, 4 x 32 galvanised for BioWIN 10-26, VestoWIN Klassik 170-220	1.00	pcs
450	017922	Spring washer DIN 127B, M8 galvanised for BioWIN 10-26, EasyWIN Premium 180	1.00	pcs
180	041249	Support rail for baffle plate for PMX, BioWIN 10-26	1.00	pcs
1630	007626	Thermocouple	1.00	pcs
1680	006725	Top door insulating stone 346 x 290.5 x 80 for BioWIN 10-26	1.00	pcs
1210	043291	Top reserve supply container inspection cover for BioWIN10-26	1.00	pcs
1710	013749	Union nut 3/8"	1.00	pcs
1700	006351	Union nut ML8 GV	1.00	pcs
1750	024767	Washer DIN 125 - M8 - galvanised, ISO 7089 for VarioWIN, BioWIN 10-26, BioWIN XL 35-60, EasyWIN Premium 180	1.00	pcs
1740	020397	Washer M6, DIN125, polyamide, 6.6 for BioWIN 10-26,BioWIN XL 35-60	1.00	pcs
1870	007070	Water tank for BioWIN 10-26	1.00	pcs
500	019415	Wing nut DIN 315 - M8 - brass for FAX, FireWIN, VarioWIN, BioWIN 10, EasyWIN Premium 180	4.00	pcs

Burner pot (A000126)

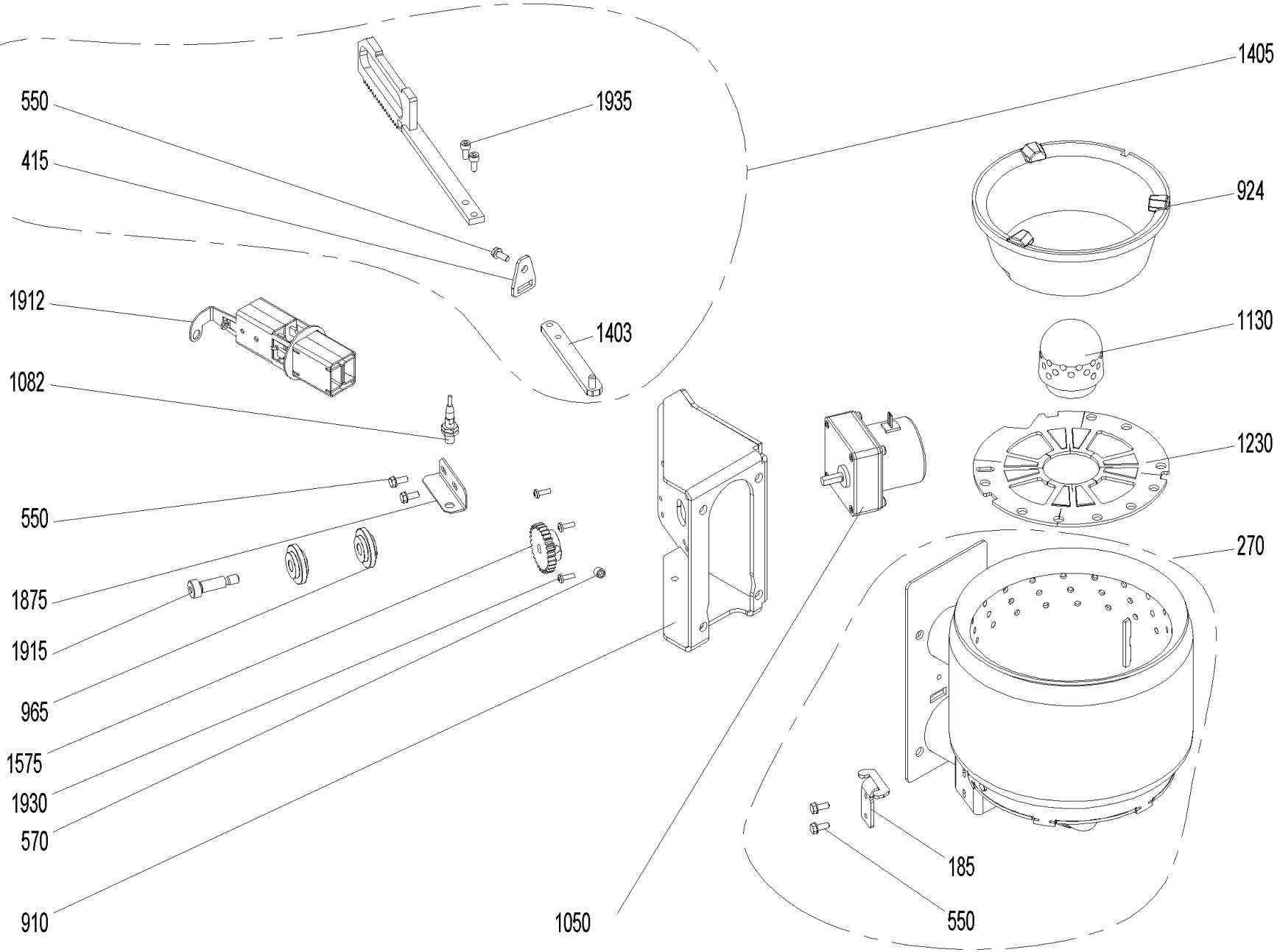

Burner pot (A000126)

Item no.	Article no.	Description	Quantity	Unit
965	007125	Bearing for vibrating drive	2.00	pcs
1880	043970	Bracket for bottom insulation for BioWIN10-26	1.00	pcs
270	046211	Burner, complete for BioWIN 21/26, from batch 30	1.00	pcs
785	053643	Cable - ignition element for BW1, BW2, FireWIN and VarioWIN	1.00	pcs
924	006911	Cone top part/cone for PMX 21/26, BioWIN21/26	1.00	pcs
1935	033531	Cylinder-head screw, hexagon socket ISO 4762 - M6x10 - 8.8 - (DIN 912) for VarioWIN, BioWIN 10-26	1.00	pcs
1930	016780	Cylinder screw M4x12 DIN 7985	2.00	pcs
1405	045232	Driving rod, complete for BioWIN10-26 à partir de lot 30 , FireWIn à partir de lot 10, VarioWIN	1.00	pcs
185	045919	Driving rod seating bracket for VarioWIN, BioWIN 10-26 from batch 30, FireWIN	1.00	pcs
415	045229	Feed-through seal for lever for BioWIN 10-26 from batch 30	1.00	pcs
1050	012530	Grate shaking motor mounted replacement: 012517 for BioWIN10-26, FireWIN, VarioWIN	1.00	pcs
550	031545	Hexagon screw M5x12 DIN 7500 (not ilustrated)	1.00	pcs
1912	055201	Ignition element BioWIN10-26, FireWIN from lot 15, VarioWIN from lot 15 BioWIN XL, LWK	1.00	pcs
1913	053851	Ignition element with cable	1.00	pcs
1403	045223	Inner driving rod for BioWIN 10-26 from batch 30, VarioWIN, FireWIN	1.00	pcs
1875	045216	Limit switch bracket for BioWIN 10-26 from batch 30, VarioWIN, FireWIN	1.00	pcs
1130	046212	Primary air pin for BioWIN 10/26 from batch 30	1.00	pcs
1082	009342	Proximity switch, inductive M8x1 for VarioWIN, FireWIN, BioWIN 10-26	1.00	pcs
560	016163	Setscrew DIN913 - M8 x 40-A2 for BioWIN 10-26	1.00	pcs
570	033112	Setscrew M8x10 DIN916	1.00	pcs
910	045215	Shake-out motor bracket for BioWIN 10-26 from batch 30, FireWIN from batch 10, VarioWIN	1.00	pcs

Burner pot (A000126)

Item no.	Article no.	Description	Quantity	Unit
1915	017048	Shoulder screw M8 10x25 ISO 7379	1.00	pcs
1575	047116	Spur gear; for shake-out drive Z=21, m=1,5 for BioWIN 21/26 from batch 30	1.00	pcs
1230	045213	Top grate plate for BioWIN 21/26 from batch 30	1.00	pcs

Cladding (A000124)

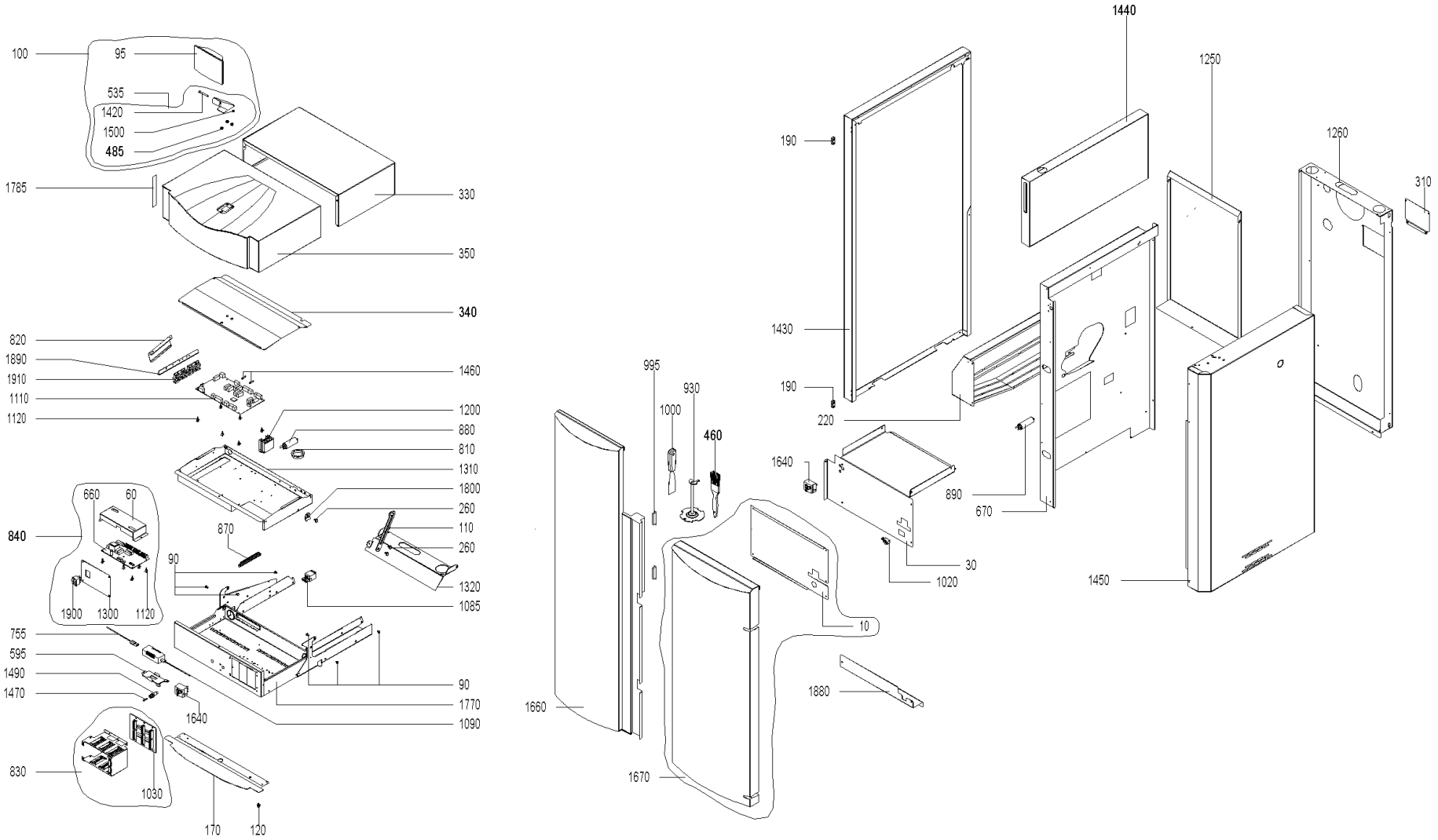

Cladding (A000124)

Item no.	Article no.	Description	Quantity	Unit
1470	003228	6.3A fuse (not illustrated)	1.00	pcs
1020	009277	Air control microswitch	1.00	pcs
190	044677	Bands 96-140 (hinge for left door) with fastening screw for BioWIN 10-26, BioWIN XL 35-60	1.00	pcs
850	046125	Boiler control panel BioWIN 10-26 from lot 30	1.00	pcs
260	033091	Bolt DIN 1445 - 8h11 x 4 x 10 - St - galvanised for VarioWIN, FireWIN, BioWIN 10-26, BioWIN XL 35-60	1.00	pcs
1880	043970	Bracket for bottom insulation for BioWIN10-26	1.00	pcs
785	053643	Cable - ignition element for BW1, BW2, FireWIN and VarioWIN	1.00	pcs
810	004096	Cable feed-through 2400 black Ø50	1.00	pcs
770	044659	Cable for auger motor for BioWIN 10-26	1.00	pcs
780	044358	Cable for ignition for BioWIN 10-26	1.00	pcs
750	044359	Cable for motor for heating surface cleaning and ash removal for BioWIN 10-26 - Only BioWIN Klassik -	1.00	pcs
740	045967	Cable for motor shake-out for BioWIN 10-26 from batch 30	1.00	pcs
760	044357	Cable for shaking (012512 Fa. Crouzet) for BioWIN 10-26	1.00	pcs
830	046130	Cable harness for MES control, new ET for BioWIN 10-26, BioWIN XL 35-60	1.00	pcs
840	044671	Cable harness for REG standard control for BioWIN 10-26	1.00	pcs
830	047123	Cable harness MES PLUS BioWIN	1.00	pcs
820	044654	Cable holding plate RAL 7021 for BioWIN 10-26	1.00	pcs
890	007334	Capacitor 8µF for auger motor, MAB MKP8 for PMX21/26, BioWIN 21/26, BioWIN XL 35-60	1.00	pcs
930	046572	Cleaning tool/cone removal tool for BioWIN21/26	1.00	pcs
930	046570	Cleaning tool / removal device for cone for BioWIN 10 from batch30, VarioWIN	1.00	pcs
90	016006	Collar screw M4 x 11.8 mm, galvanised for BioWIN 10-26,BioWIN XL 35-60	1.00	pcs

Cladding (A000124)

Item no.	Article no.	Description	Quantity	Unit
730	044361	Combustion chamber door switch cable for BioWIN 10-26	1.00	pcs
890	007332	Condenser 4µF for auger motor for PMX150,BioWIN10/15,FireWIN,VarioWIN, BioWIN XL 35-60	1.00	pcs
880	007330	Condenser for motor MAB 500V, 3µF for HMX,PMX,SWK,BioWIN10-26,FireWIN,VarioWIN,BioWIN XL 35-60, EasyWIN Premium 180,LogWIN Premiu	1.00	pcs
930	046571	Cone cleaning tool/removal device for BioWIN 15 from batch 30, FireWIN from batch 10	1.00	pcs
1770	044223	Control panel bottom part complete, coated for BioWINT 10-26, BioWIN XL 35-60	1.00	pcs
340	042998	Control panel cover for BioWIN 10-26, SilvaWIN, BioWIN XL 35-60	1.00	pcs
1320	043437	Control panel fixed part hinge for BioWIN 10-26	1.00	pcs
110	044218	Control panel lock arm for BioWIN10-26	1.00	pcs
1310	043807	Control panel top part for BioWIN 10-26, SWK, BioWIN XL35-60	1.00	pcs
1200	045087	Conversion kit relay	1.00	pcs
60	051690	Cover BUML incl. Sticker	1.00	pcs
310	041539	Cover for rear wall for PMX, BioWIN 10-26	1.00	pcs
100	048075	de: InfoWIN-SET für BioWIN10-26 bis SN: 834999	1.00	pcs
1110	011995	de: Platine Feuerungsautomat FMP-B2 V6.50 BioWIN ab SN: 830001	1.00	pcs
10	043884	Filling door cover plate for BioWIN 10-26	1.00	pcs
485	017001	Flanged nut M5 for BioWIN 10-26, BioWIN XL 35-60	1.00	pcs
30	043971	Front boiler cover plate for BioWIN10-26	1.00	pcs
350	044220	Front cover, complete for BioWIN 10-26	1.00	pcs
170	044362	Front support cover for BioWIN 10-26	1.00	pcs
1460	006900	Fuse 1 A T 5x20 ceramic tube	1.00	pcs
1490	003663	Fuse holder	1.00	pcs

Cladding (A000124)

Item no.	Article no.	Description	Quantity	Unit
1420	016214	Hexagon screw DIN931 M5 x 45, black for BioWIN XL 35-60	1.00	pcs
535	046311	Housing foot InfoWIN cpl. with fastening material for LogWIN Premium 180-505,BioWIN 10-26,SWK-T,BioWIN XL 35-60	1.00	pcs
95	011985	InfoWINplus HW C4 SW V4.10 BioWIN, LWP, JetWIN, EcoWIN	1.00	pcs
670	043928	Insulating plate for BioWIN 10-26	1.00	pcs
1660	044238	Left door completely assembled for BioWIN10-26	1.00	pcs
1250	043533	Left rear wall for BioWIN 10-26	1.00	pcs
1430	044235	Left side panel completely assembled, new ET for BioWIN 10-26	1.00	pcs
1800	043808	Locking arm for control panel for BioWIN 10-26, BioWIN XL 35-60	1.00	pcs
120	016001	Locking screw M5 x 19, galvanised for BioWIN 10-26	1.00	pcs
1500	016728	Locknut M 5, DIN 985, black for BioWIN 10-26, BioWIN XL 35-60	1.00	pcs
995	001759	Magnetic lock No. 246.41 for GKW,NBE,GKX,GWX,GTX,PMX,HMX,FireWIN,VarioWIN, BioWIN 10-26	2.00	pcs
1085	041430	Mains connection socket 3-pin for MIRA,ETX,PMX,BioWIN10-26,LogWIN Premium 180-505,EasyWIN Premium 180,BioWIN XL 35-60, FireWIN	1.00	pcs
660	051541	Modification set BUML TTL to BUML TTL 2Z	1.00	pcs
1030	046131	Module connection PCB, new ET for BioWIN10-26, BioWIN XL 35-60	1.00	pcs
1120	007609	PCB holder	1.00	pcs
755	002059	Power supply cable (not illustrated)	1.00	pcs
595	002050	Power supply unit 002049 holding plate for VarioWIN, FireWIN, BioWIN 10-26, BioWIN XL 35-60, LogWIN Premium 180-505	1.00	pcs
1090	051645	Power supply unit 12V	1.00	pcs
755	002051	Power supply unit cable FRIWO (primary power line) for VarioWIN, FireWIN, BioWIN 10-26, BioWIN XL 35-60, LogWIN Premium 180-505	1.00	pcs

Cladding (A000124)

Item no.	Article no.	Description	Quantity	Unit
330	044221	Rear cover, complete silk grey (RAL7044) for BioWIN 10-26	1.00	pcs
1670	044236	Right door completely assembled for BioWIN 10-26	1.00	pcs
1260	044239	Right rear wall completely assembled for BioWIN 10-26	1.00	pcs
1450	044234	Right side panel completely assembled for BioWIN 10-26	1.00	pcs
1440	044227	Right side panel for reserve supply container for BioWIN10-26	1.00	pcs
1900	005563	Rocker switch SW/GR 0-1	1.00	pcs
1640	046451	Safety thermostat LS1+100/-6, Auger for FireWIN, BioWIN 10-26, BioWIN XL 35-60	1.00	pcs
1000	009540	Spatula	1.00	pcs
790	044360	STB auger tube cable for BioWIN 10-26, BioWIN XL 35-60 * not illustrated	1.00	pcs
1910	041914	Strain relief 4X, complete, assembled for ETX/SNX,PSX,GENIO/MultiWIN, SilvaWIN, BioWIN XL, BioWIN10-26, BioWIN XL 35-60	1.00	pcs
1890	044217	Strain relief bracket for SilvaWIN, BioWIN10-26, BioWIN XL 35-60	1.00	pcs
1300	044244	Switch panel REG for BioWIN 10-26	1.00	pcs
870	009928	Terminal bar	1.00	pcs
220	045207	Touch protection for BioWIN10-26 from batch 30	1.00	pcs
1785	007082	Velvet foils 150x20mm, grey, for cover for BioWIN 10-26	1.00	pcs
1860	040925	Wago terminal block 8-pin blue/grey (230 V) pre-assembled for BioWIN 10-26, BioWIN XL 35-60 (*not illustrated)	1.00	pcs
1810	040926	Wago terminal block 11-pin orange (extra-low voltage) pre-assembled for BioWIN 10-26, BioWIN XL 35-60	1.00	pcs
1850	006720	Wago terminal block 261 1-9, 8-pce. Emergency door switch/probe switching for BioWIN, VarioWIN, FireWIN, BioWIN10-26, BioWIN XL 35	1.00	pcs
1830	006719	Wago terminal block 261 6-pce. heating requirement/probe switching for BioWIN 10-26, BioWIN XL 35-60 (*not illustrated)	1.00	pcs

Cladding (A000124)

Item no.	Article no.	Description	Quantity	Unit
1840	009960	Wago terminal block 261; 8-pin 230V extnd. for VarioWIN, FireWIN, BioWIN10-26, BioWIN XL 35-60 (*not illustrated)	1.00	pcs
1820	009968	Wago terminal block 261; 13-pin orange extra-low voltage (no. 1-13), for VarioWIN, FireWIN, BioWIN 10-26, BioWIN XL 35-60 (*not il	1.00	pcs
460	017094	WERL056 Flat brush 1 1/2" NO. 72753 for FireWIN, VarioWIN, BioWIN10-26, BioWIN XL 35-60	1.00	pcs

BW_ 260 (BioWIN00+BW_260)

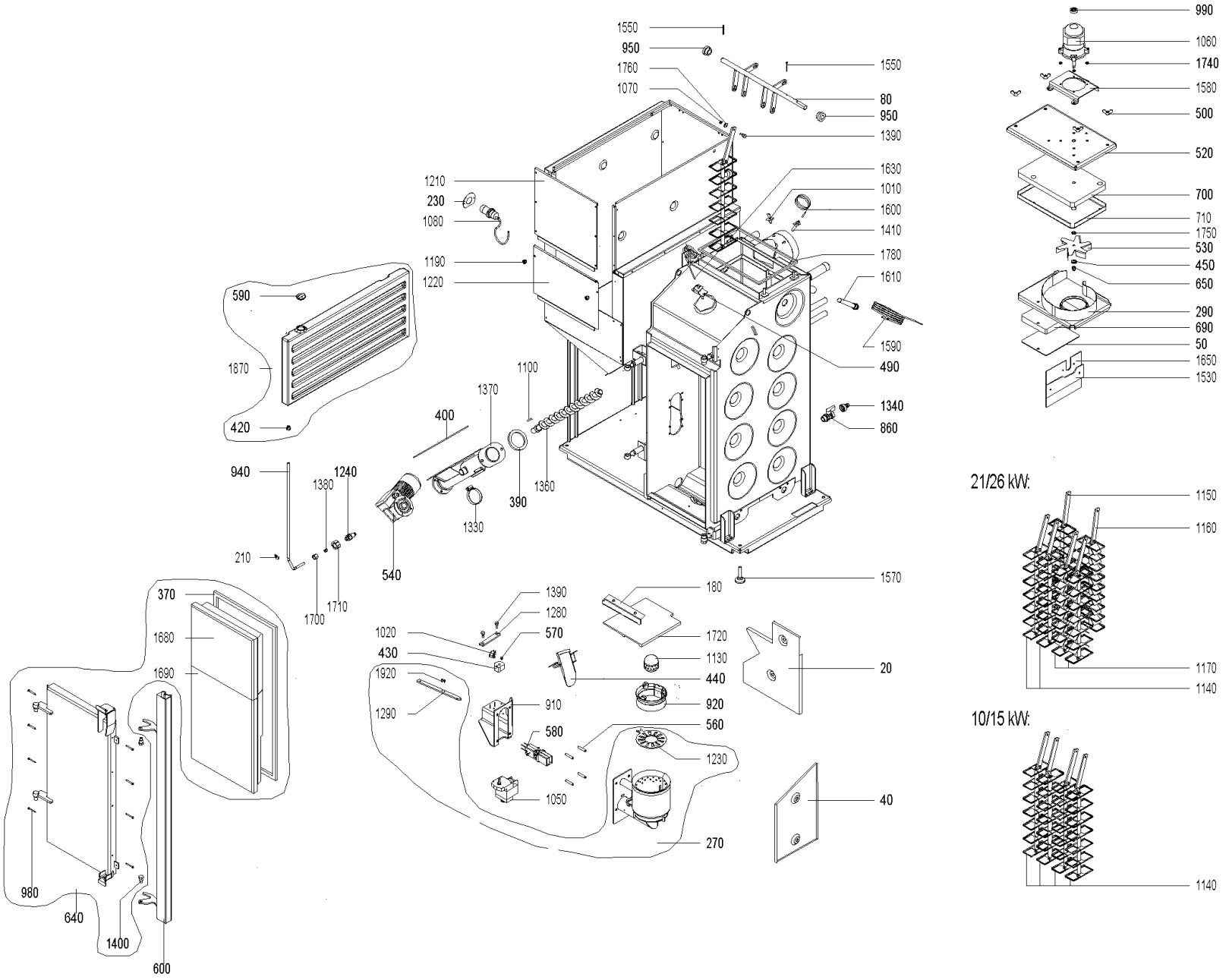

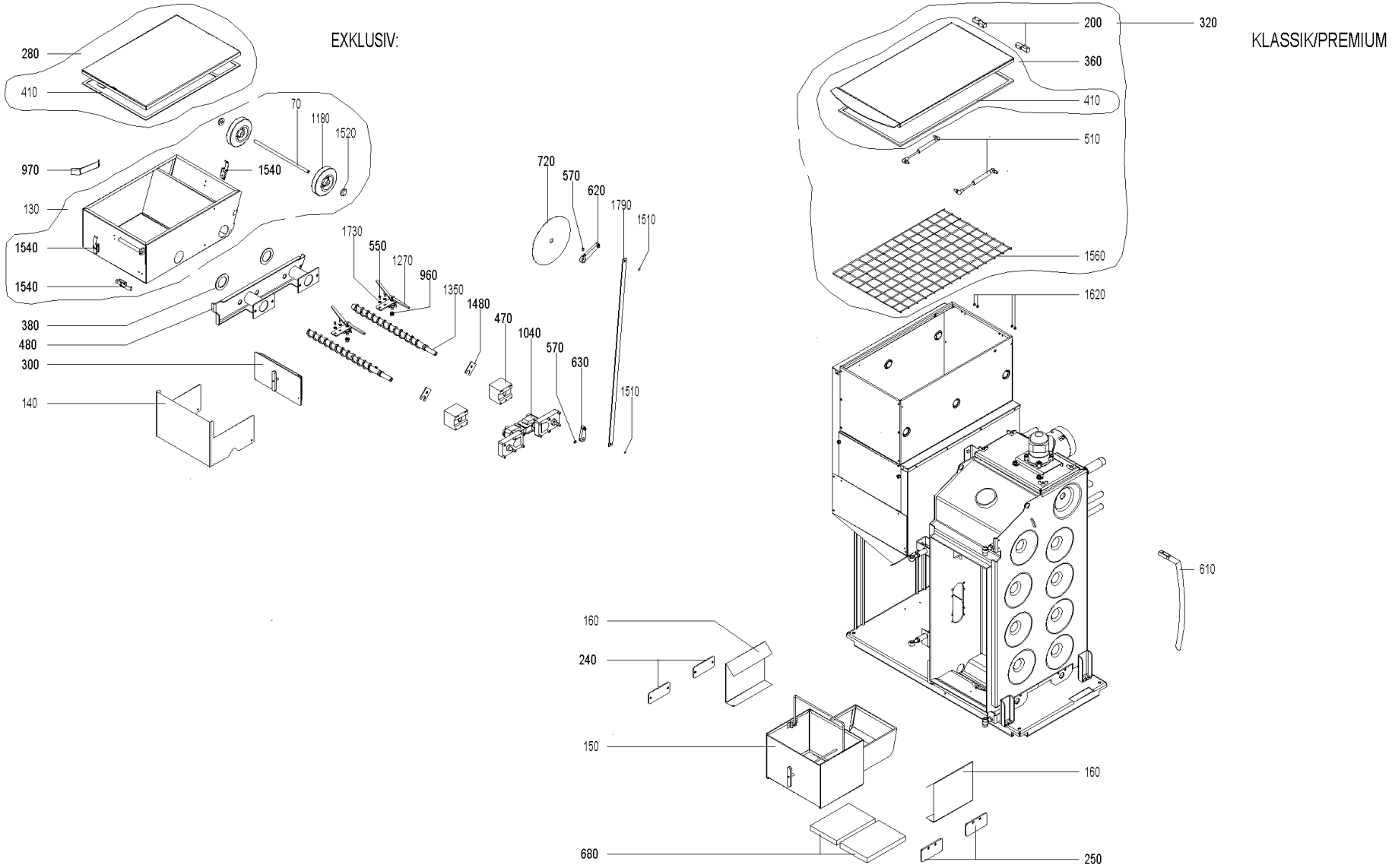
EXKLUSIV:
280
410
70
1180
1520
970
1540
130
1540
1540
380
480
300
140
720
570
620
1790
1510
1730
550
1270
960
1350
1480
470
1040
570
630
1510
KLASSIK/PREMIUM
200
320
360
410
510
1560
1620
610
160
240
150
160
680
250

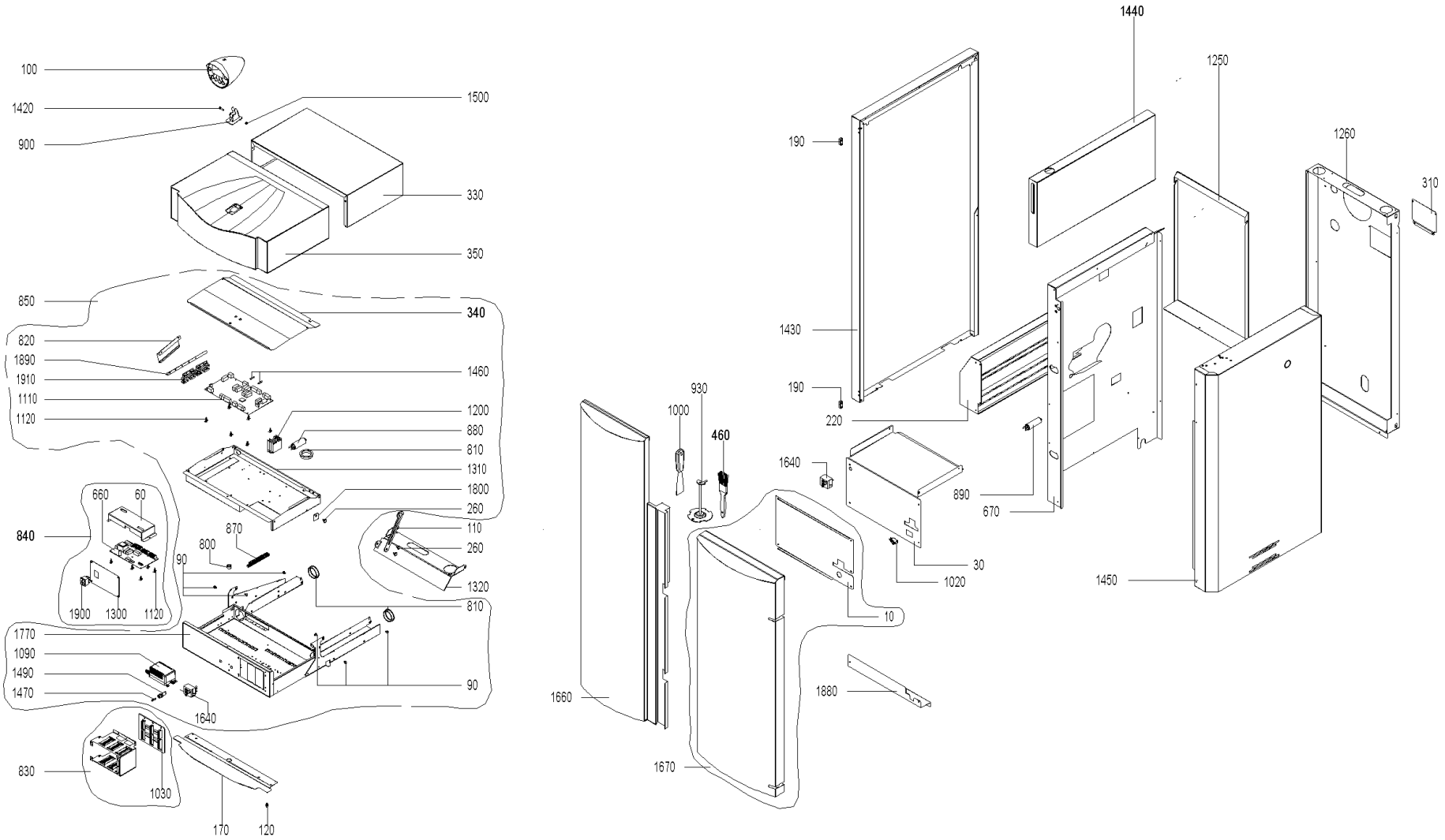
100
1420
900
1500
330
350
850
340
820
1890
1910
1110
1120
1460
1200
880
810
1310
1800
260
110
260
1320
810
660
60
840
870
800
90
1900
1300
1120
1770
1090
1490
1470
1640
90
830
1030
170
120
1440
1250
1260
310
190
1430
190
220
1640
890
670
30
1020
10
1880
1450
930
1000
460
1660
1670

BW_ 260 (BioWIN00+BW_260)

Item no.	Article no.	Description	Quantity	Unit
1470	003228	6.3A fuse (not illustrated)	1.00	pcs
1020	009277	Air control microswitch	1.00	pcs
970	043529	Ash container baffle plate for BioWIN10-26 - Only BioWIN Exklusiv -	1.00	pcs
280	044682	Ash container cover with seal for BioWIN 10-26 - Only BioWIN Exklusiv -	1.00	pcs
130	003080	Ash container cpl. assembled (incl. Cover) for BioWIN 10-26 - Only BioWIN Exklusiv -	1.00	pcs
135	003080	Ash container cpl. assembled (incl. Cover) for BioWIN 10-26 - Only BioWIN Exklusiv -	1.00	pcs
480	045224	Ash container flange, complete painted grey+ seals for BioWIN 10-26 - Only BioWIN Exklusiv -	1.00	pcs
960	006745	Ash conveyor bearing bush	1.00	pcs
380	006843	Ash conveyor seal Ø72x48,3x2mm PMX,BioWIN	1.00	pcs
150	043489	Ash pan complete for BioWIN 10-26 - Only BioWIN Klassik/Premium -	1.00	pcs
140	043325	Ash plate for BioWIN 10-26 - Only BioWIN Exklusiv -	1.00	pcs
1480	043748	Ash removal auger locking plate for BioWIN 10-26 - Only BioWIN Exklusiv -	1.00	pcs
470	044680	Ash removal flange, complete with bearing bushes for BioWIN 10-26 (Only BioWIN Exklusiv), BioWIN XL 35-60	2.00	pcs
1360	041139	Auger, complete for pellets for PMX, BioWIN 10-26	1.00	pcs
1350	043534	Auger for ash removal for BioWIN 10-26 - Only BioWIN Exklusiv -	2.00	pcs
390	006841	Auger tube/boiler seal for PMX, BioWIN 10-26	1.00	pcs
400	006842	Auger tube/reserve supply container seal 178x178x3mm for PMX, BioWIN 10-26, BioWIN XL35-60	1.00	pcs
630	044212	Automatic heating surface cleaning bottom lever, complete for BioWIN 10-26 - Only BioWIN Exklusiv -	1.00	pcs
1790	043460	Automatic heating surface cleaning connection for BioWIN 10-26	1.00	pcs
620	043819	Automatic heating surface cleaning top lever, complete for BioWIN10-26 - Only BioWIN	1.00	pcs

Item no.	Article no.	Description	Quantity	Unit
		Exklusiv -		
70	043523	Axis ash container for BioWIN 10-26 (Only BioWIN Exklusiv), BioWIN XL 35-60	1.00	pcs
80	043771	Axis heating surface cleaning complete - This part is used as spare parts for all types ! - for BioWIN10-26 (except 10/15E)	1.00	pcs
1720	006850	Baffle plate for PMX, BioWIN 10-26	1.00	pcs
190	044677	Bands 96-140 (hinge for left door) with fastening screw for BioWIN 10-26, BioWIN XL 35-60	1.00	pcs
950	006758	Bearing for heating surface cleaning for PMX, BioWIN 10-26	1.00	pcs
965	007125	Bearing for vibrating drive	2.00	pcs
320	503301	BIO039 lid for hopper for BioWIN 10-26 - Only BioWIN Klassik,Exklusiv S -	1.00	pcs
240	041717	Blind flange for ash removal for PMX, BioWIN10-26 - Only BioWIN Klassik/Premium -	1.00	pcs
690	006916	Blower box insulating stone 190 x 139 x 25 SN450 for PMX21/26,BioWIN10-26	1.00	pcs
520	040882	Blower cover for PMX, BioWIN 10-26	1.00	pcs
530	043892	Blower wheel Ø150mm for BioWIN 21/26	1.00	pcs
850	046125	Boiler control panel BioWIN 10-26 from lot 30	1.00	pcs
260	033091	Bolt DIN 1445 - 8h11 x 4 x 10 - St - galvanised for VarioWIN, FireWIN, BioWIN 10-26, BioWIN XL 35-60	1.00	pcs
1690	006805	Bottom door insulating stone 450 x 346 x 80 for BioWIN 10-26	1.00	pcs
1220	043292	Bottom reserve supply container inspection cover for BioWIN10-26	1.00	pcs
1880	043970	Bracket for bottom insulation for BioWIN10-26	1.00	pcs
1240	042510	Burn-back protection completely assembled for PMX, BioWIN 10-26	1.00	pcs
785	053643	Cable - ignition element for BW1, BW2, FireWIN and VarioWIN	1.00	pcs
800	009542	Cable feed-through	1.00	pcs
810	004096	Cable feed-through 2400 black Ø50	1.00	pcs

Item no.	Article no.	Description	Quantity	Unit
770	044659	Cable for auger motor for BioWIN 10-26	1.00	pcs
780	044358	Cable for ignition for BioWIN 10-26	1.00	pcs
750	044359	Cable for motor for heating surface cleaning and ash removal for BioWIN 10-26 - Only BioWIN Klassik -	1.00	pcs
740	045967	Cable for motor shake-out for BioWIN 10-26 from batch 30	1.00	pcs
760	044357	Cable for shaking (012512 Fa. Crouzet) for BioWIN 10-26	1.00	pcs
830	046130	Cable harness for MES control, new ET for BioWIN 10-26, BioWIN XL 35-60	1.00	pcs
840	044671	Cable harness for REG standard control for BioWIN 10-26	1.00	pcs
830	047123	Cable harness MES PLUS BioWIN	1.00	pcs
820	044654	Cable holding plate RAL 7021 for BioWIN 10-26	1.00	pcs
890	007334	Capacitor 8µF for auger motor, MAB MKP8 for PMX21/26, BioWIN 21/26, BioWIN XL 35-60	1.00	pcs
650	025967	Cap nut DIN 1587 - M8 - 6 - galvanised for FAX, FireWIN, VarioWIN, BioWIN 10-26, EasyWIN Klassik/Premium 180	1.00	pcs
1510	016165	Circlip DIN471 - 8 x 0.8 for BioWIN 10-26 (Only BioWIN Exklusiv), BioWIN XL 35-60	1.00	pcs
1530	042369	Clamping plate for PMX21/26, BioWIN 10-26	1.00	pcs
1140	042016	Clearer flat, complete for PMX, BioWIN 10-26	2.00	pcs
1170	042717	Clearer flat, complete front updraft for PMX 21/26, BioWIN21/26	2.00	pcs
1150	042715	Clearer flat, complete rear downdraft for PMX21/26, BioWIN 21/26	1.00	pcs
1160	042716	Clearer flat, complete rear updraft for PMX21/26, BioWIN21/26	1.00	pcs
90	016006	Collar screw M4 x 11.8 mm, galvanised for BioWIN 10-26,BioWIN XL 35-60	1.00	pcs
370	043827	Comb. chamber door sealing cord, fibreglass packing 16 x 10 mm x 2.17 m for BioWIN 10-26	1.00	pcs
730	044361	Combustion chamber door switch cable for BioWIN 10-26	1.00	pcs
490	043756	Combustion chamber sensor flange for BioWIN10-26, BioWIN XL 35-60	1.00	pcs

Item no.	Article no.	Description	Quantity	Unit
880	007330	Condenser for motor MAB 500V, 3µF for HMX,PMX,SWK,BioWIN10-26,FireWIN,VarioWIN,BioWIN XL 35-60, EasyWIN Premium 180,LogWIN Premiu	1.00	pcs
920	006911	Cone top part/cone for PMX 21/26, BioWIN21/26	1.00	pcs
1770	044223	Control panel bottom part complete, coated for BioWINT 10-26, BioWIN XL 35-60	1.00	pcs
340	042998	Control panel cover for BioWIN 10-26, SilvaWIN, BioWIN XL 35-60	1.00	pcs
1320	043437	Control panel fixed part hinge for BioWIN 10-26	1.00	pcs
110	044218	Control panel lock arm for BioWIN10-26	1.00	pcs
1310	043807	Control panel top part for BioWIN 10-26, SWK, BioWIN XL35-60	1.00	pcs
1200	045087	Conversion kit relay	1.00	pcs
940	043458	Copper cable for burn-back protection for BioWIN 10-26	1.00	pcs
60	051690	Cover BUML incl. Sticker	1.00	pcs
300	043477	Cover for bottom coasting surface, complete for BioWIN 10-26 - Only BioWIN Exklusiv -	1.00	pcs
290	040895	Cover for coasting surface for BioWIN10-26, PMX	1.00	pcs
50	042375	Cover for insulating stone/blower box for PMX 210/260, BioWIN 10-26	1.00	pcs
310	041539	Cover for rear wall for PMX, BioWIN 10-26	1.00	pcs
1380	006378	Cutting ring DL8 07-151	1.00	pcs
1935	033531	Cylinder-head screw, hexagon socket ISO 4762 - M6x10 - 8.8 - (DIN 912) for VarioWIN, BioWIN 10-26	1.00	pcs
1940	020117	Cylinder-head screw, hexagon socket ISO 4762 - M12x25 - 8.8 - galva. (DIN 912) for VarioWIN, FireWIN, BioWIN10-26, LogWIN Premium	1.00	pcs
980	016719	Cylinder drilling screw 4.2 x 38 DIN7504	1.00	pcs
1920	033528	Cylinder screw M 4 x 6 - 8.8	1.00	pcs
1930	016780	Cylinder screw M4x12 DIN 7985	2.00	pcs

BW_ 260 (BioWIN00+BW_260)

Item no.	Article no.	Description	Quantity	Unit
270	044233	de: Brenner kpl. BioWIN 21/26 bis Los 29	1.00	pcs
100	048075	de: InfoWIN-SET für BioWIN10-26 bis SN: 834999	1.00	pcs
930	042421	de: Konusheber PMX210/260,BioWIN210/260 bis Los 29	1.00	pcs
1230	041730	de: Rostplatte oben BioWIN 21/26 bis Los 29	1.00	pcs
1730	018309	Disc 5 DIN134	1.00	pcs
1760	031753	Disc 6 ISO 7093	1.00	pcs
1620	009993	Disc plug T1A Ø5.7 transparent for BioWIN 10-26	1.00	pcs
440	042106	Down chute for pellets for PMX210/260,BioWIN21-26	1.00	pcs
1405	045232	Driving rod, complete for BioWIN10-26 à partir de lot 30 , FireWIn à partir de lot 10, VarioWIN	1.00	pcs
430	006010	Eccentric vibration BioWIN, FireWIN	1.00	pcs
740	044777	End switch cable of grate shakings BioWIN 10-26	1.00	pcs
210	006603	Fastening clamp Ø8, DIN 72571, Typ 604 for BioWIN 10-26	1.00	pcs
1100	006766	Feather key, without tightening DIN6885 A 6x6x28 mm for PMX, BioWIN10-26, FireWIN, VarioWIN, BioWIN XL 35-60	1.00	pcs
420	007074	Feed-through grommet DH 80/115/80 for BioWIN 10-15	1.00	pcs
415	045229	Feed-through seal for lever for BioWIN 10-26 from batch 30	1.00	pcs
10	043884	Filling door cover plate for BioWIN 10-26	1.00	pcs
485	017001	Flanged nut M5 for BioWIN 10-26, BioWIN XL 35-60	1.00	pcs
30	043971	Front boiler cover plate for BioWIN10-26	1.00	pcs
350	044220	Front cover, complete for BioWIN 10-26	1.00	pcs
170	044362	Front support cover for BioWIN 10-26	1.00	pcs
1460	006900	Fuse 1 A T 5x20 ceramic tube	1.00	pcs

Item no.	Article no.	Description	Quantity	Unit
1490	003663	Fuse holder	1.00	pcs
510	012600	Gas spring 4534DS 0100 N	2.00	pcs
540	044664	Geared motor for auger 7,8 RPM, pluggable conversion instructions for use are enclosed by PMX21/26 for BioWIN 21/26, BioWIN XL 35-	1.00	pcs
590	007073	Grip plug GPN310 G30 SW for water reservoir for BioWIN 10-26	1.00	pcs
640	044684	Heating door, complete for BioWIN 10-26	1.00	pcs
600	043546	Heating door handle, complete coated red for BioWIN 10-26	1.00	pcs
610	044248	Heating surface cleaning hand lever RAL7021 for BioWIN 10-26 - Only BioWIN Klassik/Premium -	1.00	pcs
720	043929	Heating surface cleaning insulation protection Ø220 x Ø18,2 x 1 galvanised for BioWIN 10-26 - Only BioWIN Exklusiv -	1.00	pcs
1420	016214	Hexagon screw DIN931 M5 x 45, black for BioWIN XL 35-60	1.00	pcs
550	031545	Hexagon screw M5x12 DIN 7500 (not ilustrated)	1.00	pcs
1330	006905	Hose clip 50-70/9 C71 for PMX, BioWIN 10-26	1.00	pcs
1340	004386	Hose grommet, union nut and seal for KFE ball valve for BioWIN 10-26, BioWIN XL 35-60,LogWIN Premium 180-505	1.00	pcs
535	046311	Housing foot InfoWIN cpl. with fastening material for LogWIN Premium 180-505,BioWIN 10-26,SWK-T,BioWIN XL 35-60	1.00	pcs
580	055201	Ignition element BioWIN10-26, FireWIN from lot 15, VarioWIN from lot 15 BioWIN XL, LWK	1.00	pcs
580	053851	Ignition element with cable	1.00	pcs
900	043964	InfoWIN bracket for SilvaWIN,BioWIN	1.00	pcs
95	011985	InfoWINplus HW C4 SW V4.10 BioWIN, LWP, JetWIN, EcoWIN	1.00	pcs
1403	045223	Inner driving rod for BioWIN 10-26 from batch 30, VarioWIN, FireWIN	1.00	pcs
670	043928	Insulating plate for BioWIN 10-26	1.00	pcs

Item no.	Article no.	Description	Quantity	Unit
680	006917	Insulating stone for rear floor 225 x 155 x 25 for PMX21/26, BioWIN 10-26 (Only BioWIN Klassik/Premium)	2.00	pcs
700	006770	Insulation for blower cover RBP-9 (313x194x30) for PMX, BioWIN10-26	1.00	pcs
710	040887	Insulation support for blower cover for PMX, BioWIN 10-26	1.00	pcs
1580	044007	Jet protection plate for blower motor for BioWIN 10-26, SilvaWIN	1.00	pcs
860	004385	KFE cock	1.00	pcs
1190	007655	Knurled nut with through-hole thread M5 SW for VarioWIN, FireWIN,BioWIN10-26	1.00	pcs
160	043493	Left/right ash baffle plate for BioWIN 10-26 - Only BioWIN Klassik/Premium -	1.00	pcs
1660	044238	Left door completely assembled for BioWIN10-26	1.00	pcs
1250	043533	Left rear wall for BioWIN 10-26	1.00	pcs
1430	044235	Left side panel completely assembled, new ET for BioWIN 10-26	1.00	pcs
1570	009990	Leg M10 x 40	1.00	pcs
1875	045216	Limit switch bracket for BioWIN 10-26 from batch 30, VarioWIN, FireWIN	1.00	pcs
1800	043808	Locking arm for control panel for BioWIN 10-26, BioWIN XL 35-60	1.00	pcs
120	016001	Locking screw M5 x 19, galvanised for BioWIN 10-26	1.00	pcs
1500	016728	Locknut M 5, DIN 985, black for BioWIN 10-26, BioWIN XL 35-60	1.00	pcs
990	007304	Magnet, complete, glued for motor for PMX, HMX from lot 24, BioWIN 10-26	1.00	pcs
995	001759	Magnetic lock No. 246.41 for GKW,NBE,GKX,GWX,GTX,PMX,HMX,FireWIN,VarioWIN, BioWIN 10-26	2.00	pcs
1085	041430	Mains connection socket 3-pin for MIRA,ETX,PMX,BioWIN10-26,LogWIN Premium 180-505,EasyWIN Premium 180,BioWIN XL 35-60, FireWIN	1.00	pcs
1010	020035	Measuring hole plug for BioWIN 10-26	1.00	pcs
1600	006820	MES007 Immersion sensor (exhaust gas sensor) Pt 1000 for PMX, FireWIN, VarioWIN, BioWIN 10-26, BioWIN XL 35-60	1.00	pcs

BW_ 260 (BioWIN00+BW_260)

Item no.	Article no.	Description	Quantity	Unit
1590	502186	MES009M Immersion sensor	1.00	pcs
1270	043816	Mixer, complete painted grey for BioWIN XL 35-60, BioWIN 10-26 (Only BioWIN Exklusiv)	1.00	pcs
660	051541	Modification set BUML TTL to BUML TTL 2Z	1.00	pcs
1030	046131	Module connection PCB, new ET for BioWIN10-26, BioWIN XL 35-60	1.00	pcs
1040	044665	Motor	1.00	pcs
1060	044666	Motor for blower, ET new Conversion instructions for use with PMX 15-26 are enclosed! for BioWIN 10-26	1.00	pcs
1070	016596	Nut DIN 934 - M6 - A2 for VarioWIN, FireWIN, BioWIN10-26, BioWIN XL 35-60	1.00	pcs
1610	005452	OK-915 Immersion sleeve (129 mm) No.55501.04 for EKX,OK/E,GWX,KSN,ZHN,OK-915,ETX,SNX,FKX,MIRA,FireWIN,VestoWIN Klassik 170-220,	1.00	pcs
65	046214	Partition plate cover cpl. for BioWIN 10-26	1.00	pcs
1035	046214	Partition plate cover cpl. for BioWIN 10-26	1.00	pcs
1650	042368	Partition plate for PMX21/26,BioWIN10-26	1.00	pcs
1110	012002	PCB, FMP BW2 to SN: 829999	1.00	pcs
1120	007609	PCB holder	1.00	pcs
230	044656	Plate fill level switch for BioWIN 10-26	1.00	pcs
595	002050	Power supply unit 002049 holding plate for VarioWIN, FireWIN, BioWIN 10-26, BioWIN XL 35-60, LogWIN Premium 180-505	1.00	pcs
1090	051645	Power supply unit 12V	1.00	pcs
755	002051	Power supply unit cable FRIWO (primary power line) for VarioWIN, FireWIN, BioWIN 10-26, BioWIN XL 35-60, LogWIN Premium 180-505	1.00	pcs
1130	047774	Primary air pin for BioWIN10-26 FireWIN bis Los9 und PMX 21-26	1.00	pcs
1410	041498	Protective tube for exhaust gas sensor	1.00	pcs
1082	009342	Proximity switch, inductive M8x1 for VarioWIN, FireWIN, BioWIN 10-26	1.00	pcs

Item no.	Article no.	Description	Quantity	Unit
1080	007821	Proximity switch EC 3025 NPAPL	1.00	pcs
330	044221	Rear cover, complete silk grey (RAL7044) for BioWIN 10-26	1.00	pcs
20	041250	Rear cover plate for PMX, BioWIN10-26	1.00	pcs
360	044678	Reserve supply container cover, complete with seal, silk grey for BioWIN 10-26 - Only BioWIN Klassik -	1.00	pcs
1805	045586	Reserve supply container for pellets for BioWIN 10-26	1.00	pcs
250	043752	Right blind flange, for ash removal for BioWIN 10-26 - Only BioWIN Klassik/Premium -	1.00	pcs
40	041251	Right cover plate for PMX, BioWIN 10-26	1.00	pcs
1670	044236	Right door completely assembled for BioWIN 10-26	1.00	pcs
1260	044239	Right rear wall completely assembled for BioWIN 10-26	1.00	pcs
1450	044234	Right side panel completely assembled for BioWIN 10-26	1.00	pcs
1440	044227	Right side panel for reserve supply container for BioWIN10-26	1.00	pcs
1900	005563	Rocker switch SW/GR 0-1	1.00	pcs
1640	046451	Safety thermostat LS1+100/-6, Auger for FireWIN, BioWIN 10-26, BioWIN XL 35-60	1.00	pcs
1400	009219	Screw door handle bearing M12 (WAF17/30) - galvanised for HMX, BioWIN10-26, FireWIN, VarioWIN, EasyWIN Klassik/Premium 180	1.00	pcs
1395	045076	Screw M6 (with U-washer and nut) for heating surface cleaning complete for PMX, BioWIN10-26, FireWIN, VarioWIN	1.00	pcs
1390	006756	Screw M6 for heating surface cleaning for PMX,BioWIN 10-26,FireWIN, BioWIN XL 35-60, LogWIN Premium 180-505	1.00	pcs
1780	048837	Seal	1.00	pcs
380	046455	Seal ash container (2pieces 190xØ10mm) for BioWIN 10-26	1.00	pcs
1370	042679	Sealed auger tube, new ET for PMX, BioWIN 10-26	1.00	pcs
410	000047	Sealing band 12x4mm SK for GMX,GENIO/MultiWIN,XENTA,BioWIN 10-26 (Only BioWIN	2.20	m

Item no.	Article no.	Description	Quantity	Unit
		Klassik), VarioWIN, FireWIN		
385	016162	Seal Thermocontrol sensor (temperature sensor), 3/4" (38x27x3mm) for BioWIN 10-26	1.00	pcs
560	016163	Setscrew DIN913 - M8 x 40-A2 for BioWIN 10-26	1.00	pcs
570	033112	Setscrew M8x10 DIN916	1.00	pcs
1050	012512	Shake-out motor	1.00	pcs
1280	042536	Shaker lever 1 PMX 21/26, BioWIN 10-26, FireWIN	1.00	pcs
1290	042103	Shaker lever 2 PMX21/26,BioWIN10-26	1.00	pcs
910	041734	Shaker motor bracket BioWIN 10-26	1.00	pcs
1915	017048	Shoulder screw M8 10x25 ISO 7379	1.00	pcs
200	044802	Southco hinge	1.00	pcs
1000	009540	Spatula	1.00	pcs
1550	017981	Split pin DIN 94, 4 x 32 galvanised for BioWIN 10-26, VestoWIN Klassik 170-220	1.00	pcs
1540	009546	Spring lock	1.00	pcs
450	017922	Spring washer DIN 127B, M8 galvanised for BioWIN 10-26, EasyWIN Premium 180	1.00	pcs
790	044360	STB auger tube cable for BioWIN 10-26, BioWIN XL 35-60 * not illustrated	1.00	pcs
1560	007239	Steel mesh (galvanised wire mesh 646 x 394 x 4) for BioWIN 10-26 - Only BioWIN Klassik -	1.00	pcs
1910	041914	Strain relief 4X, complete, assembled for ETX/SNX,PSX,GENIO/MultiWIN, SilvaWIN, BioWIN XL, BioWIN10-26, BioWIN XL 35-60	1.00	pcs
1890	044217	Strain relief bracket for SilvaWIN, BioWIN10-26, BioWIN XL 35-60	1.00	pcs
180	041249	Support rail for baffle plate for PMX, BioWIN 10-26	1.00	pcs
1300	044244	Switch panel REG for BioWIN 10-26	1.00	pcs
870	009928	Terminal bar	1.00	pcs
1630	007626	Thermocouple	1.00	pcs

BW_ 260 (BioWIN00+BW_260)

Item no.	Article no.	Description	Quantity	Unit
1680	006725	Top door insulating stone 346 x 290.5 x 80 for BioWIN 10-26	1.00	pcs
1210	043291	Top reserve supply container inspection cover for BioWIN10-26	1.00	pcs
220	045207	Touch protection for BioWIN10-26 from batch 30	1.00	pcs
1710	013749	Union nut 3/8"	1.00	pcs
1700	006351	Union nut ML8 GV	1.00	pcs
1785	007082	Velvet foils 150x20mm, grey, for cover for BioWIN 10-26	1.00	pcs
1860	040925	Wago terminal block 8-pin blue/grey (230 V) pre-assembled for BioWIN 10-26, BioWIN XL 35-60 (*not illustrated)	1.00	pcs
1810	040926	Wago terminal block 11-pin orange (extra-low voltage) pre-assembled for BioWIN 10-26, BioWIN XL 35-60	1.00	pcs
1850	006720	Wago terminal block 261 1-9, 8-pce. Emergency door switch/probe switching for BioWIN, VarioWIN, FireWIN, BioWIN10-26, BioWIN XL 35	1.00	pcs
1830	006719	Wago terminal block 261 6-pce. heating requirement/probe switching for BioWIN 10-26, BioWIN XL 35-60 (*not illustrated)	1.00	pcs
1840	009960	Wago terminal block 261; 8-pin 230V extnd. for VarioWIN, FireWIN, BioWIN10-26, BioWIN XL 35-60 (*not illustrated)	1.00	pcs
1820	009968	Wago terminal block 261; 13-pin orange extra-low voltage (no. 1-13), for VarioWIN, FireWIN, BioWIN 10-26, BioWIN XL 35-60 (*not il	1.00	pcs
1750	024767	Washer DIN 125 - M8 - galvanised, ISO 7089 for VarioWIN, BioWIN 10-26, BioWIN XL 35-60, EasyWIN Premium 180	1.00	pcs
1740	020397	Washer M6, DIN125, polyamide, 6.6 for BioWIN 10-26,BioWIN XL 35-60	1.00	pcs
1520	006889	Washer Ø12	1.00	pcs
1870	007070	Water tank for BioWIN 10-26	1.00	pcs
460	017094	WERL056 Flat brush 1 1/2" NO. 72753 for FireWIN, VarioWIN, BioWIN10-26, BioWIN XL 35-60	1.00	pcs
1180	006888	Wheel AG 125-12	1.00	pcs

BW_ 260 (BioWIN00+BW_260)

Item no.	Article no.	Description	Quantity	Unit
500	007366	Wing nut M8	1.00	pcs

Ash conveyor (A000123)

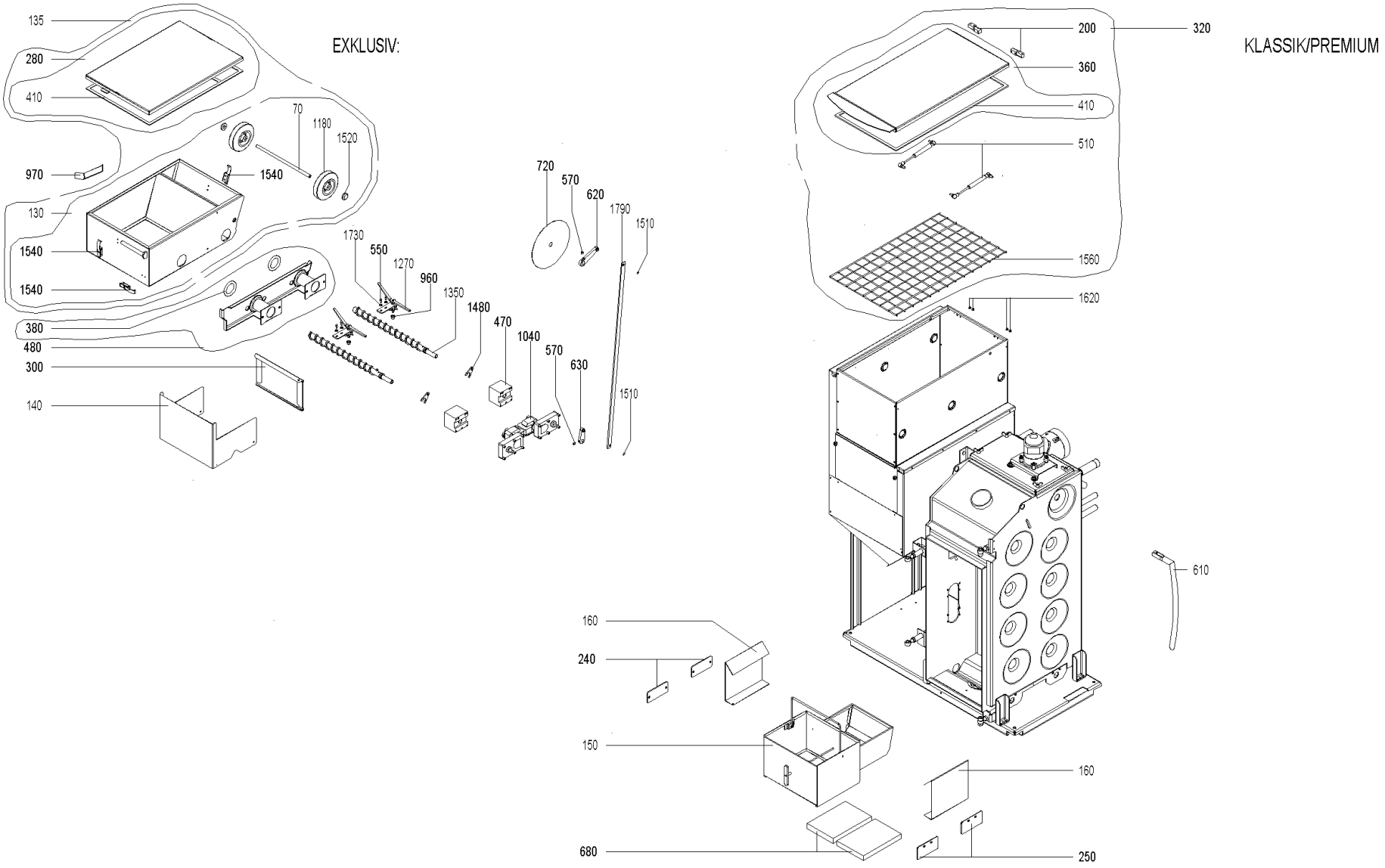

28.10.2016

Ash conveyor (A000123)

Item no.	Article no.	Description	Quantity	Unit
970	043529	Ash container baffle plate for BioWIN10-26 - Only BioWIN Exklusiv -	1.00	pcs
280	044682	Ash container cover with seal for BioWIN 10-26 - Only BioWIN Exklusiv -	1.00	pcs
130	003080	Ash container cpl. assembled (incl. Cover) for BioWIN 10-26 - Only BioWIN Exklusiv -	1.00	pcs
135	003080	Ash container cpl. assembled (incl. Cover) for BioWIN 10-26 - Only BioWIN Exklusiv -	1.00	pcs
480	045224	Ash container flange, complete painted grey+ seals for BioWIN 10-26 - Only BioWIN Exklusiv -	1.00	pcs
960	006745	Ash conveyor bearing bush	1.00	pcs
380	006843	Ash conveyor seal Ø72x48,3x2mm PMX,BioWIN	1.00	pcs
150	043489	Ash pan complete for BioWIN 10-26 - Only BioWIN Klassik/Premium -	1.00	pcs
140	043325	Ash plate for BioWIN 10-26 - Only BioWIN Exklusiv -	1.00	pcs
1480	043748	Ash removal auger locking plate for BioWIN 10-26 - Only BioWIN Exklusiv -	1.00	pcs
470	044680	Ash removal flange, complete with bearing bushes for BioWIN 10-26 (Only BioWIN Exklusiv), BioWIN XL 35-60	2.00	pcs
1350	043534	Auger for ash removal for BioWIN 10-26 - Only BioWIN Exklusiv -	2.00	pcs
630	044212	Automatic heating surface cleaning bottom lever, complete for BioWIN 10-26 - Only BioWIN Exklusiv -	1.00	pcs
1790	043460	Automatic heating surface cleaning connection for BioWIN 10-26	1.00	pcs
620	043819	Automatic heating surface cleaning top lever, complete for BioWIN10-26 - Only BioWIN Exklusiv -	1.00	pcs
70	043523	Axis ash container for BioWIN 10-26 (Only BioWIN Exklusiv), BioWIN XL 35-60	1.00	pcs
320	503301	BIO039 lid for hopper for BioWIN 10-26 - Only BioWIN Klassik,Exklusiv S -	1.00	pcs
240	041717	Blind flange for ash removal for PMX, BioWIN10-26 - Only BioWIN Klassik/Premium -	2.00	pcs
1510	016165	Circlip DIN471 - 8 x 0.8 for BioWIN 10-26 (Only BioWIN Exklusiv), BioWIN XL 35-60	1.00	pcs
300	043477	Cover for bottom coasting surface, complete for BioWIN 10-26 - Only BioWIN Exklusiv -	1.00	pcs

Ash conveyor (A000123)

Item no.	Article no.	Description	Quantity	Unit
1730	018309	Disc 5 DIN134	1.00	pcs
1620	009993	Disc plug T1A Ø5.7 transparent for BioWIN 10-26	1.00	pcs
510	012600	Gas spring 4534DS 0100 N	2.00	pcs
610	044248	Heating surface cleaning hand lever RAL7021 for BioWIN 10-26 - Only BioWIN Klassik/Premium -	1.00	pcs
720	043929	Heating surface cleaning insulation protection Ø220 x Ø18,2 x 1 galvanised for BioWIN 10-26 - Only BioWIN Exklusiv -	1.00	pcs
550	031545	Hexagon screw M5x12 DIN 7500 (not ilustrated)	1.00	pcs
680	006917	Insulating stone for rear floor 225 x 155 x 25 for PMX21/26, BioWIN 10-26 (Only BioWIN Klassik/Premium)	2.00	pcs
160	043493	Left/right ash baffle plate for BioWIN 10-26 - Only BioWIN Klassik/Premium -	2.00	pcs
1270	043816	Mixer, complete painted grey for BioWIN XL 35-60, BioWIN 10-26 (Only BioWIN Exklusiv)	1.00	pcs
1040	044665	Motor	1.00	pcs
360	044678	Reserve supply container cover, complete with seal, silk grey for BioWIN 10-26 - Only BioWIN Klassik -	1.00	pcs
250	043752	Right blind flange, for ash removal for BioWIN 10-26 - Only BioWIN Klassik/Premium -	2.00	pcs
380	046455	Seal ash container (2pieces 190xØ10mm) for BioWIN 10-26	1.00	pcs
410	000047	Sealing band 12x4mm SK for GMX,GENIO/MultiWIN,XENTA,BioWIN 10-26 (Only BioWIN Klassik), VarioWIN, FireWIN	2.20	m
570	033112	Setscrew M8x10 DIN916	1.00	pcs
200	044802	Southco hinge	2.00	pcs
1540	009546	Spring lock	1.00	pcs
1560	007239	Steel mesh (galvanised wire mesh 646 x 394 x 4) for BioWIN 10-26 - Only BioWIN Klassik -	1.00	pcs
1520	006889	Washer Ø12	1.00	pcs

Ash conveyor (A000123)

Item no.	Article no.	Description	Quantity	Unit
1180	006888	Wheel AG 125-12	1.00	pcs

Boiler (A000122)

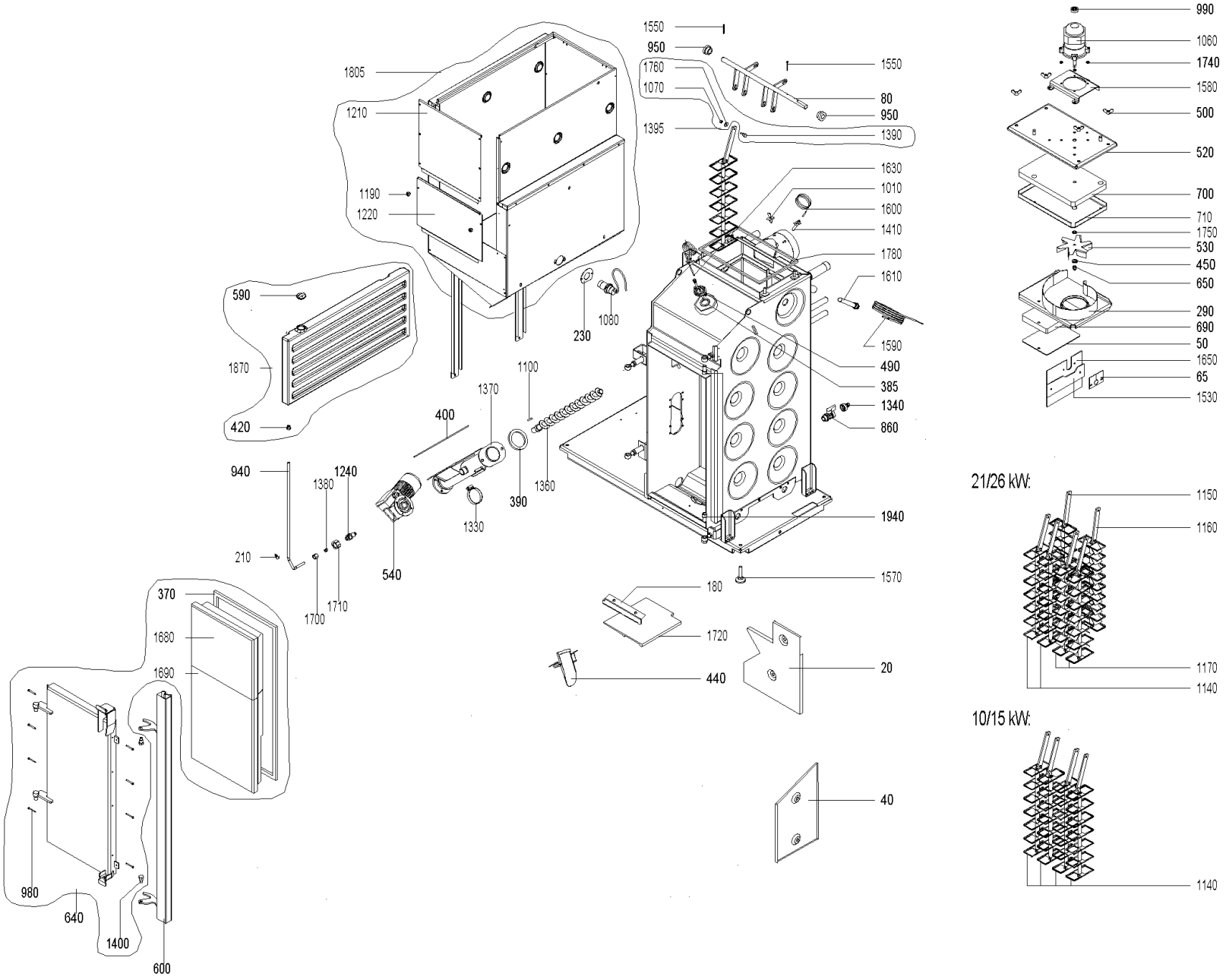

Boiler (A000122)

Item no.	Article no.	Description	Quantity	Unit
1360	041139	Auger, complete for pellets for PMX, BioWIN 10-26	1.00	pcs
390	006841	Auger tube/boiler seal for PMX, BioWIN 10-26	1.00	pcs
400	006842	Auger tube/reserve supply container seal 178x178x3mm for PMX, BioWIN 10-26, BioWIN XL35-60	1.00	pcs
80	043771	Axis heating surface cleaning complete - This part is used as spare parts for all types ! - for BioWIN10-26 (except 10/15E)	1.00	pcs
1720	006850	Baffle plate for PMX, BioWIN 10-26	1.00	pcs
950	006758	Bearing for heating surface cleaning for PMX, BioWIN 10-26	1.00	pcs
690	006916	Blower box insulating stone 190 x 139 x 25 SN450 for PMX21/26,BioWIN10-26	1.00	pcs
520	040882	Blower cover for PMX, BioWIN 10-26	1.00	pcs
530	043892	Blower wheel Ø150mm for BioWIN 21/26	1.00	pcs
1690	006805	Bottom door insulating stone 450 x 346 x 80 for BioWIN 10-26	1.00	pcs
1220	043292	Bottom reserve supply container inspection cover for BioWIN10-26	1.00	pcs
1240	042510	Burn-back protection completely assembled for PMX, BioWIN 10-26	1.00	pcs
650	025967	Cap nut DIN 1587 - M8 - 6 - galvanised for FAX, FireWIN, VarioWIN, BioWIN 10-26, EasyWIN Klassik/Premium 180	1.00	pcs
1530	042369	Clamping plate for PMX21/26, BioWIN 10-26	1.00	pcs
1140	042016	Clearer flat, complete for PMX, BioWIN 10-26	2.00	pcs
1170	042717	Clearer flat, complete front updraft for PMX 21/26, BioWIN21/26	2.00	pcs
1150	042715	Clearer flat, complete rear downdraft for PMX21/26, BioWIN 21/26	2.00	pcs
1160	042716	Clearer flat, complete rear updraft for PMX21/26, BioWIN21/26	2.00	pcs
370	043827	Comb. chamber door sealing cord, fibreglass packing 16 x 10 mm x 2.17 m for BioWIN 10-26	1.00	pcs
490	043756	Combustion chamber sensor flange for BioWIN10-26, BioWIN XL 35-60	1.00	pcs

Boiler (A000122)

Item no.	Article no.	Description	Quantity	Unit
940	043458	Copper cable for burn-back protection for BioWIN 10-26	1.00	pcs
290	040895	Cover for coasting surface for BioWIN10-26, PMX	1.00	pcs
50	042375	Cover for insulating stone/blower box for PMX 210/260, BioWIN 10-26	1.00	pcs
1380	006378	Cutting ring DL8 07-151	1.00	pcs
1940	020117	Cylinder-head screw, hexagon socket ISO 4762 - M12x25 - 8.8 - galva. (DIN 912) for VarioWIN, FireWIN, BioWIN10-26, LogWIN Premium	1.00	pcs
980	016719	Cylinder drilling screw 4.2 x 38 DIN7504	1.00	pcs
1760	031753	Disc 6 ISO 7093	1.00	pcs
440	042106	Down chute for pellets for PMX210/260,BioWIN21-26	1.00	pcs
210	006603	Fastening clamp Ø8, DIN 72571, Typ 604 for BioWIN 10-26	1.00	pcs
1100	006766	Feather key, without tightening DIN6885 A 6x6x28 mm for PMX, BioWIN10-26, FireWIN, VarioWIN, BioWIN XL 35-60	1.00	pcs
420	007074	Feed-through grommet DH 80/115/80 for BioWIN 10-15	1.00	pcs
540	044664	Geared motor for auger 7,8 RPM, pluggable conversion instructions for use are enclosed by PMX21/26 for BioWIN 21/26, BioWIN XL 35-	1.00	pcs
590	007073	Grip plug GPN310 G30 SW for water reservoir for BioWIN 10-26	1.00	pcs
640	044684	Heating door, complete for BioWIN 10-26	1.00	pcs
600	043546	Heating door handle, complete coated red for BioWIN 10-26	1.00	pcs
1330	006905	Hose clip 50-70/9 C71 for PMX, BioWIN 10-26	1.00	pcs
1340	004386	Hose grommet, union nut and seal for KFE ball valve for BioWIN 10-26, BioWIN XL 35-60,LogWIN Premium 180-505	1.00	pcs
700	006770	Insulation for blower cover RBP-9 (313x194x30) for PMX, BioWIN10-26	1.00	pcs
710	040887	Insulation support for blower cover for PMX, BioWIN 10-26	1.00	pcs
1580	044007	Jet protection plate for blower motor for BioWIN 10-26, SilvaWIN	1.00	pcs

Boiler (A000122)

Item no.	Article no.	Description	Quantity	Unit
860	004385	KFE cock	1.00	pcs
1190	007655	Knurled nut with through-hole thread M5 SW for VarioWIN, FireWIN,BioWIN10-26	1.00	pcs
1570	009990	Leg M10 x 40	4.00	pcs
990	007304	Magnet, complete, glued for motor for PMX, HMX from lot 24, BioWIN 10-26	1.00	pcs
1010	020035	Measuring hole plug for BioWIN 10-26	1.00	pcs
1600	006820	MES007 Immersion sensor (exhaust gas sensor) Pt 1000 for PMX, FireWIN, VarioWIN, BioWIN 10-26, BioWIN XL 35-60	1.00	pcs
1590	502186	MES009M Immersion sensor	1.00	pcs
1060	044666	Motor for blower, ET new Conversion instructions for use with PMX 15-26 are enclosed! for BioWIN 10-26	1.00	pcs
1070	016596	Nut DIN 934 - M6 - A2 for VarioWIN, FireWIN, BioWIN10-26, BioWIN XL 35-60	1.00	pcs
1610	005452	OK-915 Immersion sleeve (129 mm) No.55501.04 for EKX,OK/E,GWX,KSN,ZHN,OK-915,ETX,SNX,FKX,MIRA,FireWIN,VestoWIN Klassik 170-220,	1.00	pcs
65	046214	Partition plate cover cpl. for BioWIN 10-26	1.00	pcs
1650	042368	Partition plate for PMX21/26,BioWIN10-26	1.00	pcs
230	044656	Plate fill level switch for BioWIN 10-26	1.00	pcs
1410	041498	Protective tube for exhaust gas sensor	1.00	pcs
1080	007821	Proximity switch EC 3025 NPAPL	1.00	pcs
20	041250	Rear cover plate for PMX, BioWIN10-26	1.00	pcs
1805	045586	Reserve supply container for pellets for BioWIN 10-26	1.00	pcs
40	041251	Right cover plate for PMX, BioWIN 10-26	1.00	pcs
1400	009219	Screw door handle bearing M12 (WAF17/30) - galvanised for HMX, BioWIN10-26, FireWIN, VarioWIN, EasyWIN Klassik/Premium 180	1.00	pcs
1395	045076	Screw M6 (with U-washer and nut) for heating surface cleaning complete for PMX,	1.00	pcs

Boiler (A000122)

Item no.	Article no.	Description	Quantity	Unit
		BioWIN10-26, FireWIN, VarioWIN		
1390	006756	Screw M6 for heating surface cleaning for PMX,BioWIN 10-26,FireWIN, BioWIN XL 35-60, LogWIN Premium 180-505	1.00	pcs
1780	048837	Seal	1.00	pcs
1370	042679	Sealed auger tube, new ET for PMX, BioWIN 10-26	1.00	pcs
385	016162	Seal Thermocontrol sensor (temperature sensor), 3/4" (38x27x3mm) for BioWIN 10-26	1.00	pcs
1550	017981	Split pin DIN 94, 4 x 32 galvanised for BioWIN 10-26, VestoWIN Klassik 170-220	1.00	pcs
450	017922	Spring washer DIN 127B, M8 galvanised for BioWIN 10-26, EasyWIN Premium 180	1.00	pcs
180	041249	Support rail for baffle plate for PMX, BioWIN 10-26	1.00	pcs
1630	007626	Thermocouple	1.00	pcs
1680	006725	Top door insulating stone 346 x 290.5 x 80 for BioWIN 10-26	1.00	pcs
1210	043291	Top reserve supply container inspection cover for BioWIN10-26	1.00	pcs
1710	013749	Union nut 3/8"	1.00	pcs
1700	006351	Union nut ML8 GV	1.00	pcs
1750	024767	Washer DIN 125 - M8 - galvanised, ISO 7089 for VarioWIN, BioWIN 10-26, BioWIN XL 35-60, EasyWIN Premium 180	1.00	pcs
1740	020397	Washer M6, DIN125, polyamide, 6.6 for BioWIN 10-26,BioWIN XL 35-60	1.00	pcs
1870	007070	Water tank for BioWIN 10-26	1.00	pcs
500	019415	Wing nut DIN 315 - M8 - brass for FAX, FireWIN, VarioWIN, BioWIN 10, EasyWIN Premium 180	4.00	pcs

Burner pot (A000126)

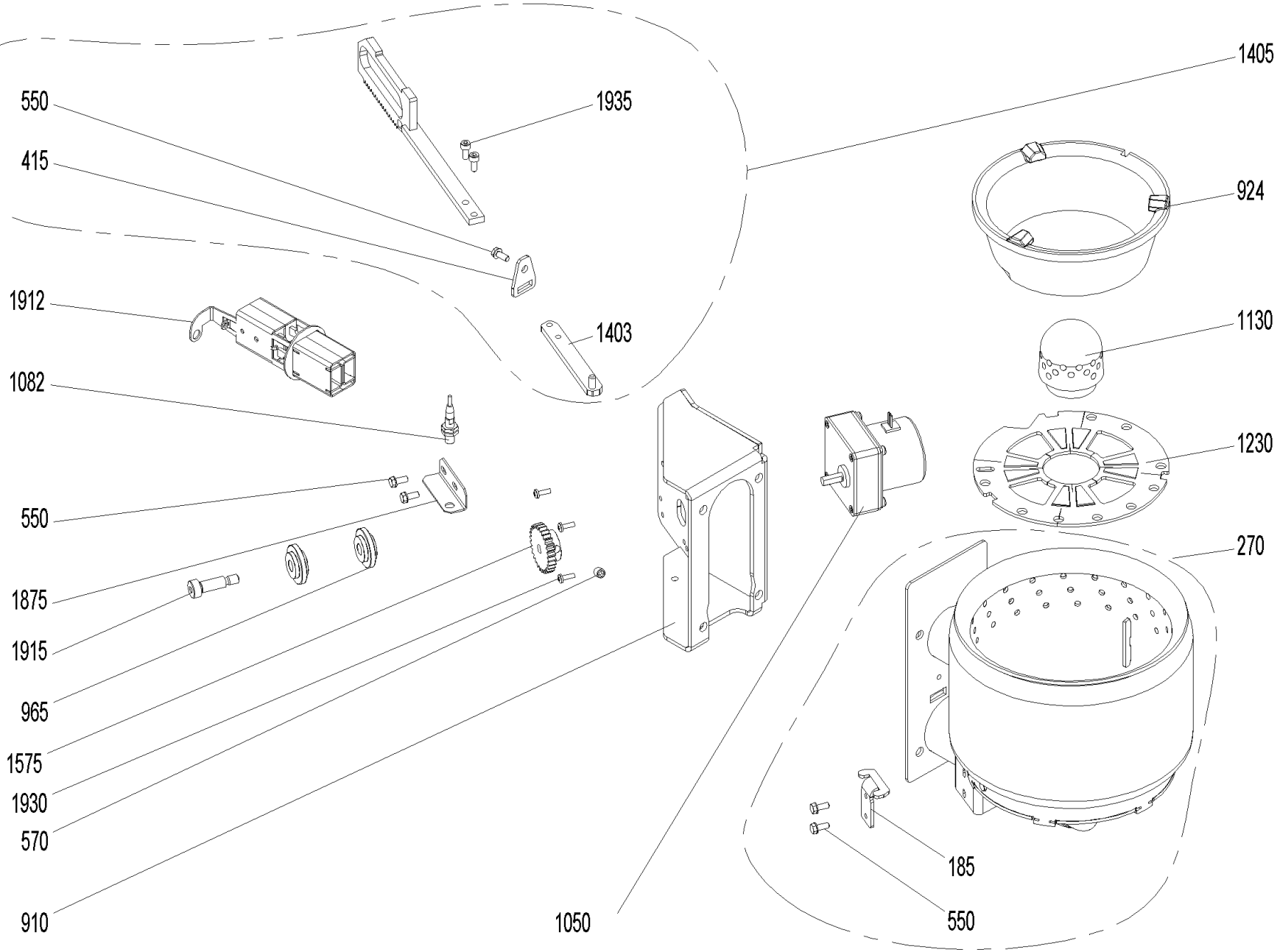

Burner pot (A000126)

Item no.	Article no.	Description	Quantity	Unit
965	007125	Bearing for vibrating drive	2.00	pcs
1880	043970	Bracket for bottom insulation for BioWIN10-26	1.00	pcs
270	046211	Burner, complete for BioWIN 21/26, from batch 30	1.00	pcs
785	053643	Cable - ignition element for BW1, BW2, FireWIN and VarioWIN	1.00	pcs
924	006911	Cone top part/cone for PMX 21/26, BioWIN21/26	1.00	pcs
1935	033531	Cylinder-head screw, hexagon socket ISO 4762 - M6x10 - 8.8 - (DIN 912) for VarioWIN, BioWIN 10-26	1.00	pcs
1930	016780	Cylinder screw M4x12 DIN 7985	2.00	pcs
1405	045232	Driving rod, complete for BioWIN10-26 à partir de lot 30 , FireWIn à partir de lot 10, VarioWIN	1.00	pcs
185	045919	Driving rod seating bracket for VarioWIN, BioWIN 10-26 from batch 30, FireWIN	1.00	pcs
415	045229	Feed-through seal for lever for BioWIN 10-26 from batch 30	1.00	pcs
1050	012530	Grate shaking motor mounted replacement: 012517 for BioWIN10-26, FireWIN, VarioWIN	1.00	pcs
550	031545	Hexagon screw M5x12 DIN 7500 (not ilustrated)	1.00	pcs
1912	055201	Ignition element BioWIN10-26, FireWIN from lot 15, VarioWIN from lot 15 BioWIN XL, LWK	1.00	pcs
1913	053851	Ignition element with cable	1.00	pcs
1403	045223	Inner driving rod for BioWIN 10-26 from batch 30, VarioWIN, FireWIN	1.00	pcs
1875	045216	Limit switch bracket for BioWIN 10-26 from batch 30, VarioWIN, FireWIN	1.00	pcs
1130	046212	Primary air pin for BioWIN 10/26 from batch 30	1.00	pcs
1082	009342	Proximity switch, inductive M8x1 for VarioWIN, FireWIN, BioWIN 10-26	1.00	pcs
560	016163	Setscrew DIN913 - M8 x 40-A2 for BioWIN 10-26	1.00	pcs
570	033112	Setscrew M8x10 DIN916	1.00	pcs
910	045215	Shake-out motor bracket for BioWIN 10-26 from batch 30, FireWIN from batch 10, VarioWIN	1.00	pcs

Burner pot (A000126)

Item no.	Article no.	Description	Quantity	Unit
1915	017048	Shoulder screw M8 10x25 ISO 7379	1.00	pcs
1575	047116	Spur gear; for shake-out drive Z=21, m=1,5 for BioWIN 21/26 from batch 30	1.00	pcs
1230	045213	Top grate plate for BioWIN 21/26 from batch 30	1.00	pcs

Cladding (A000124)

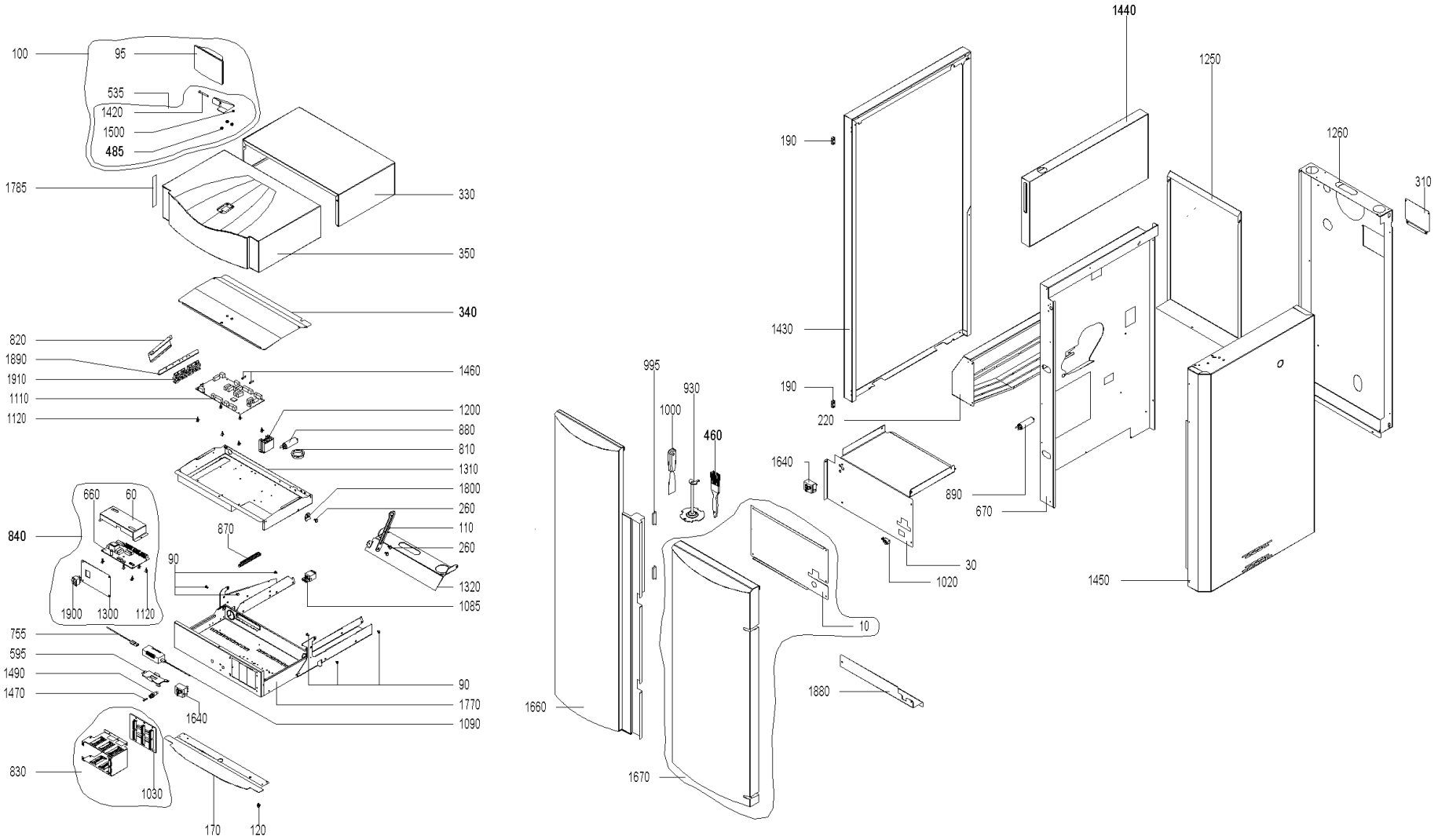

Cladding (A000124)

Item no.	Article no.	Description	Quantity	Unit
1470	003228	6.3A fuse (not illustrated)	1.00	pcs
1020	009277	Air control microswitch	1.00	pcs
190	044677	Bands 96-140 (hinge for left door) with fastening screw for BioWIN 10-26, BioWIN XL 35-60	1.00	pcs
850	046125	Boiler control panel BioWIN 10-26 from lot 30	1.00	pcs
260	033091	Bolt DIN 1445 - 8h11 x 4 x 10 - St - galvanised for VarioWIN, FireWIN, BioWIN 10-26, BioWIN XL 35-60	1.00	pcs
1880	043970	Bracket for bottom insulation for BioWIN10-26	1.00	pcs
785	053643	Cable - ignition element for BW1, BW2, FireWIN and VarioWIN	1.00	pcs
810	004096	Cable feed-through 2400 black Ø50	1.00	pcs
770	044659	Cable for auger motor for BioWIN 10-26	1.00	pcs
780	044358	Cable for ignition for BioWIN 10-26	1.00	pcs
750	044359	Cable for motor for heating surface cleaning and ash removal for BioWIN 10-26 - Only BioWIN Klassik -	1.00	pcs
740	045967	Cable for motor shake-out for BioWIN 10-26 from batch 30	1.00	pcs
760	044357	Cable for shaking (012512 Fa. Crouzet) for BioWIN 10-26	1.00	pcs
830	046130	Cable harness for MES control, new ET for BioWIN 10-26, BioWIN XL 35-60	1.00	pcs
840	044671	Cable harness for REG standard control for BioWIN 10-26	1.00	pcs
830	047123	Cable harness MES PLUS BioWIN	1.00	pcs
820	044654	Cable holding plate RAL 7021 for BioWIN 10-26	1.00	pcs
890	007334	Capacitor 8µF for auger motor, MAB MKP8 for PMX21/26, BioWIN 21/26, BioWIN XL 35-60	1.00	pcs
930	046572	Cleaning tool/cone removal tool for BioWIN21/26	1.00	pcs
930	046570	Cleaning tool / removal device for cone for BioWIN 10 from batch30, VarioWIN	1.00	pcs
90	016006	Collar screw M4 x 11.8 mm, galvanised for BioWIN 10-26,BioWIN XL 35-60	1.00	pcs

Cladding (A000124)

Item no.	Article no.	Description	Quantity	Unit
730	044361	Combustion chamber door switch cable for BioWIN 10-26	1.00	pcs
890	007332	Condenser 4µF for auger motor for PMX150,BioWIN10/15,FireWIN,VarioWIN, BioWIN XL 35-60	1.00	pcs
880	007330	Condenser for motor MAB 500V, 3µF for HMX,PMX,SWK,BioWIN10-26,FireWIN,VarioWIN,BioWIN XL 35-60, EasyWIN Premium 180,LogWIN Premiu	1.00	pcs
930	046571	Cone cleaning tool/removal device for BioWIN 15 from batch 30, FireWIN from batch 10	1.00	pcs
1770	044223	Control panel bottom part complete, coated for BioWINT 10-26, BioWIN XL 35-60	1.00	pcs
340	042998	Control panel cover for BioWIN 10-26, SilvaWIN, BioWIN XL 35-60	1.00	pcs
1320	043437	Control panel fixed part hinge for BioWIN 10-26	1.00	pcs
110	044218	Control panel lock arm for BioWIN10-26	1.00	pcs
1310	043807	Control panel top part for BioWIN 10-26, SWK, BioWIN XL35-60	1.00	pcs
1200	045087	Conversion kit relay	1.00	pcs
60	051690	Cover BUML incl. Sticker	1.00	pcs
310	041539	Cover for rear wall for PMX, BioWIN 10-26	1.00	pcs
100	048075	de: InfoWIN-SET für BioWIN10-26 bis SN: 834999	1.00	pcs
1110	011995	de: Platine Feuerungsautomat FMP-B2 V6.50 BioWIN ab SN: 830001	1.00	pcs
10	043884	Filling door cover plate for BioWIN 10-26	1.00	pcs
485	017001	Flanged nut M5 for BioWIN 10-26, BioWIN XL 35-60	1.00	pcs
30	043971	Front boiler cover plate for BioWIN10-26	1.00	pcs
350	044220	Front cover, complete for BioWIN 10-26	1.00	pcs
170	044362	Front support cover for BioWIN 10-26	1.00	pcs
1460	006900	Fuse 1 A T 5x20 ceramic tube	1.00	pcs
1490	003663	Fuse holder	1.00	pcs

Cladding (A000124)

Item no.	Article no.	Description	Quantity	Unit
1420	016214	Hexagon screw DIN931 M5 x 45, black for BioWIN XL 35-60	1.00	pcs
535	046311	Housing foot InfoWIN cpl. with fastening material for LogWIN Premium 180-505,BioWIN 10-26,SWK-T,BioWIN XL 35-60	1.00	pcs
95	011985	InfoWINplus HW C4 SW V4.10 BioWIN, LWP, JetWIN, EcoWIN	1.00	pcs
670	043928	Insulating plate for BioWIN 10-26	1.00	pcs
1660	044238	Left door completely assembled for BioWIN10-26	1.00	pcs
1250	043533	Left rear wall for BioWIN 10-26	1.00	pcs
1430	044235	Left side panel completely assembled, new ET for BioWIN 10-26	1.00	pcs
1800	043808	Locking arm for control panel for BioWIN 10-26, BioWIN XL 35-60	1.00	pcs
120	016001	Locking screw M5 x 19, galvanised for BioWIN 10-26	1.00	pcs
1500	016728	Locknut M 5, DIN 985, black for BioWIN 10-26, BioWIN XL 35-60	1.00	pcs
995	001759	Magnetic lock No. 246.41 for GKW,NBE,GKX,GWX,GTX,PMX,HMX,FireWIN,VarioWIN, BioWIN 10-26	2.00	pcs
1085	041430	Mains connection socket 3-pin for MIRA,ETX,PMX,BioWIN10-26,LogWIN Premium 180-505,EasyWIN Premium 180,BioWIN XL 35-60, FireWIN	1.00	pcs
660	051541	Modification set BUML TTL to BUML TTL 2Z	1.00	pcs
1030	046131	Module connection PCB, new ET for BioWIN10-26, BioWIN XL 35-60	1.00	pcs
1120	007609	PCB holder	1.00	pcs
755	002059	Power supply cable (not illustrated)	1.00	pcs
595	002050	Power supply unit 002049 holding plate for VarioWIN, FireWIN, BioWIN 10-26, BioWIN XL 35-60, LogWIN Premium 180-505	1.00	pcs
1090	051645	Power supply unit 12V	1.00	pcs
755	002051	Power supply unit cable FRIWO (primary power line) for VarioWIN, FireWIN, BioWIN 10-26, BioWIN XL 35-60, LogWIN Premium 180-505	1.00	pcs

Cladding (A000124)

Item no.	Article no.	Description	Quantity	Unit
330	044221	Rear cover, complete silk grey (RAL7044) for BioWIN 10-26	1.00	pcs
1670	044236	Right door completely assembled for BioWIN 10-26	1.00	pcs
1260	044239	Right rear wall completely assembled for BioWIN 10-26	1.00	pcs
1450	044234	Right side panel completely assembled for BioWIN 10-26	1.00	pcs
1440	044227	Right side panel for reserve supply container for BioWIN10-26	1.00	pcs
1900	005563	Rocker switch SW/GR 0-1	1.00	pcs
1640	046451	Safety thermostat LS1+100/-6, Auger for FireWIN, BioWIN 10-26, BioWIN XL 35-60	1.00	pcs
1000	009540	Spatula	1.00	pcs
790	044360	STB auger tube cable for BioWIN 10-26, BioWIN XL 35-60 * not illustrated	1.00	pcs
1910	041914	Strain relief 4X, complete, assembled for ETX/SNX,PSX,GENIO/MultiWIN, SilvaWIN, BioWIN XL, BioWIN10-26, BioWIN XL 35-60	1.00	pcs
1890	044217	Strain relief bracket for SilvaWIN, BioWIN10-26, BioWIN XL 35-60	1.00	pcs
1300	044244	Switch panel REG for BioWIN 10-26	1.00	pcs
870	009928	Terminal bar	1.00	pcs
220	045207	Touch protection for BioWIN10-26 from batch 30	1.00	pcs
1785	007082	Velvet foils 150x20mm, grey, for cover for BioWIN 10-26	1.00	pcs
1860	040925	Wago terminal block 8-pin blue/grey (230 V) pre-assembled for BioWIN 10-26, BioWIN XL 35-60 (*not illustrated)	1.00	pcs
1810	040926	Wago terminal block 11-pin orange (extra-low voltage) pre-assembled for BioWIN 10-26, BioWIN XL 35-60	1.00	pcs
1850	006720	Wago terminal block 261 1-9, 8-pce. Emergency door switch/probe switching for BioWIN, VarioWIN, FireWIN, BioWIN10-26, BioWIN XL 35	1.00	pcs
1830	006719	Wago terminal block 261 6-pce. heating requirement/probe switching for BioWIN 10-26, BioWIN XL 35-60 (*not illustrated)	1.00	pcs

Cladding (A000124)

Item no.	Article no.	Description	Quantity	Unit
1840	009960	Wago terminal block 261; 8-pin 230V extnd. for VarioWIN, FireWIN, BioWIN10-26, BioWIN XL 35-60 (*not illustrated)	1.00	pcs
1820	009968	Wago terminal block 261; 13-pin orange extra-low voltage (no. 1-13), for VarioWIN, FireWIN, BioWIN 10-26, BioWIN XL 35-60 (*not il	1.00	pcs
460	017094	WERL056 Flat brush 1 1/2" NO. 72753 for FireWIN, VarioWIN, BioWIN10-26, BioWIN XL 35-60	1.00	pcs

BIO 040 (BWZ00+BWZ)

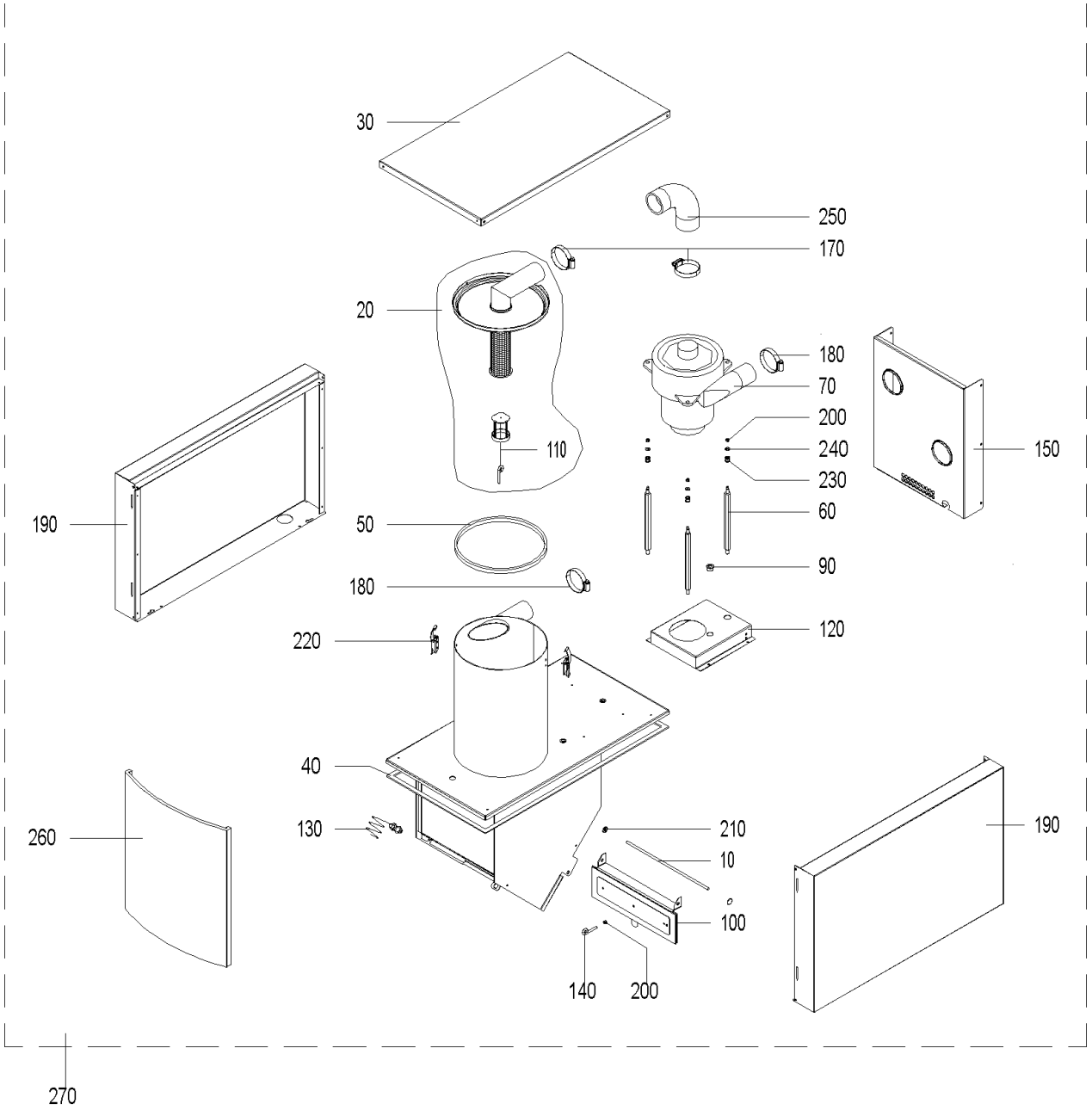

BIO 040 (BWZ00+BWZ)

Item no.	Article no.	Description	Quantity	Unit
270	505138	BIO041Feed unit for BioWIN, height = 283 mm for BioWIN 10-26	1.00	pcs
70	044667	Blower motor 122151-12 for feed Conversion instructions for use with PMX 15-26 are enclosed! for BioWIN 10-26, PMX,BioWIN XL 35-6	1.00	pcs
90	009542	Cable feed-through	1.00	pcs
80	044801	Cable for feed mains access point for BioWIN10-26 *) not illustrated	1.00	pcs
30	044243	Cover for feed, complete, assembled for BioWIN 10-26	1.00	pcs
20	042133	de: Deckel Sammelkasten(Zyklon) kpl.mit Kolben Zuführung PMX,BioWIN	1.00	pcs
60	006011	de: Distanzbolzen Zuführung BioWIN (bis Los 29)	1.00	pcs
100	042533	de: Klappe kpl. PMX/BioWIN-Zuführung (bei BioWIN bis einschließl. Los 29)	1.00	pcs
110	042230	de: Kolben kpl. montiert Zuführung PMX, BioWIN (BioWIN bis einschl. Los 30)	1.00	pcs
120	042876	de: Luftkanal Zuführung BioWIN	1.00	pcs
140	016211	de: Ringschraube mit einseitig gebogenem Ring M5x30, verzinkt BioWIN	1.00	pcs
150	044242	de: Rückwand Zuführung kpl. mit Schallisolierung zu BioWIN 10-26 bis einschließlich Los 29	1.00	pcs
190	044241	de: Seitenwand Zuführung links/rechts kpl.mont.m.Schallisol. BioWIN 10-26 bis einsch. Los 29	1.00	pcs
250	042135	de: Verbindung Sammelkasten (Zyklon) Pelletszuführung, BioWIN auf 250mm kürzen	1.00	pcs
260	044240	de: Vorderwand (h=428mm) Zuführung kpl.mont.mit Schallisolierung BioWIN 10-26 bis einschließlich Los 29	1.00	pcs
240	018309	Disc 5 DIN134	1.00	pcs
10	042452	Feed axle	1.00	pcs
180	006875	Hose clip 40-60	1.00	pcs
170	006864	Hose clips 57/20 N SK W2	1.00	pcs
200	016727	Lock nut M5	1.00	pcs

BIO 040 (BWZ00+BWZ)

Item no.	Article no.	Description	Quantity	Unit
210	006897	Lock washer Ø 6	1.00	pcs
130	006832	Proximity switch M12, inductive	1.00	pcs
230	009559	Rubber grommet DK 6-9-12-7	1.00	pcs
40	000047	Sealing band 12x4mm SK for GMX,GENIO/MultiWIN,XENTA,BioWIN 10-26 (Only BioWIN Klassik), VarioWIN, FireWIN	1.00	m
50	042232	Seal section	1.00	pcs
105	046194	Set of carbon brushes (2 pcs.) AMETEK/Lamb for PMX, BioWIN 10-26	1.00	pcs
220	009546	Spring lock	1.00	pcs

BIO 041 (BWZ01+BWNZ)

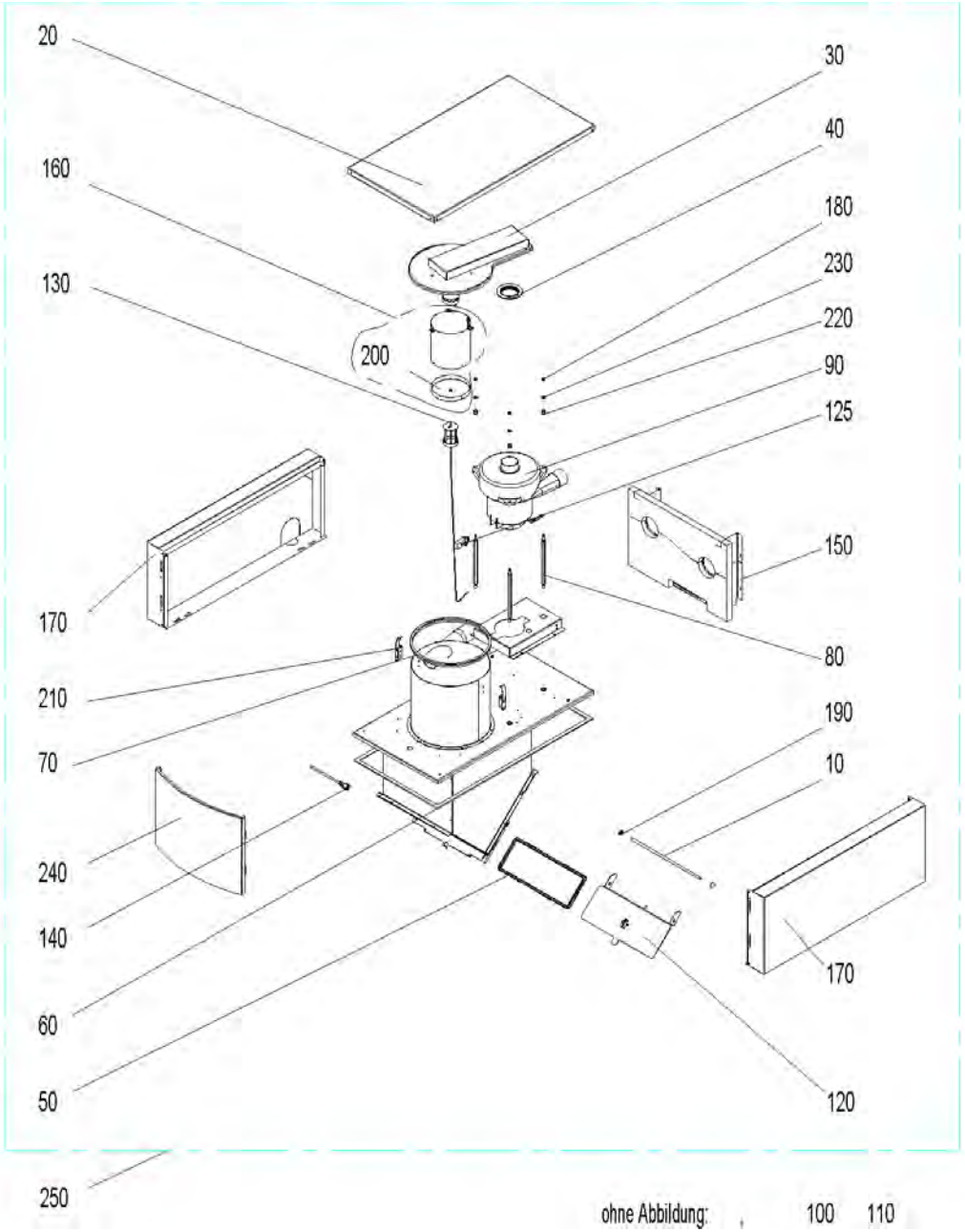

BIO 041 (BWZ01+BWNZ)

Item no.	Article no.	Description	Quantity	Unit
250	505138	BIO041Feed unit for BioWIN, height = 283 mm for BioWIN 10-26	1.00	pcs
90	044667	Blower motor 122151-12 for feed Conversion instructions for use with PMX 15-26 are enclosed! for BioWIN 10-26, PMX,BioWIN XL 35-6	1.00	pcs
40	031253	Blower seal	1.00	pcs
110	009542	Cable feed-through	1.00	pcs
100	044801	Cable for feed mains access point for BioWIN10-26 *) not illustrated	1.00	pcs
20	044243	Cover for feed, complete, assembled for BioWIN 10-26	1.00	pcs
30	046166	Cyclone cover, fully sealed, new ET for BioWIN 10-26 from batch 30	1.00	pcs
230	018309	Disc 5 DIN134	3.00	pcs
80	031256	Distance bolt	3.00	pcs
10	042452	Feed axle	1.00	pcs
120	046165	Flap, complete, assembled for BioWIN 10-26 from batch 30	1.00	pcs
50	031257	Flap seal	1.00	pcs
180	016727	Lock nut M5	3.00	pcs
190	006897	Lock washer Ø 6	2.00	pcs
160	046452	Partition plate, complete for BioWIN10-26	1.00	pcs
130	046168	Piston, complete. for BioWIN 10-26 from batch 30	1.00	pcs
140	006832	Proximity switch M12, inductive	1.00	pcs
240	046162	Rear panel (h=283mm) for feed complete with sound insulation for BioWIN 10-26 from batch 30	1.00	pcs
150	046164	Rear panel for feed complete with sound insulation for BioWIN 10-26 from batch 30	1.00	pcs
220	009559	Rubber grommet DK 6-9-12-7	3.00	pcs
60	000047	Sealing band 12x4mm SK for GMX,GENIO/MultiWIN,XENTA,BioWIN 10-26 (Only BioWIN	1.00	m

BIO 041 (BWZ01+BWNZ)

Item no.	Article no.	Description	Quantity	Unit
		Klassik), VarioWIN, FireWIN		
70	042232	Seal section	1.00	pcs
125	046194	Set of carbon brushes (2 pcs.) AMETEK/Lamb for PMX, BioWIN 10-26	1.00	pcs
170	046163	Side panel for left/right feed complete with sound insulation for BioWIN 10-26 from batch 30	2.00	pcs
200	045949	Sieve with eye	1.00	pcs
210	009546	Spring lock	2.00	pcs

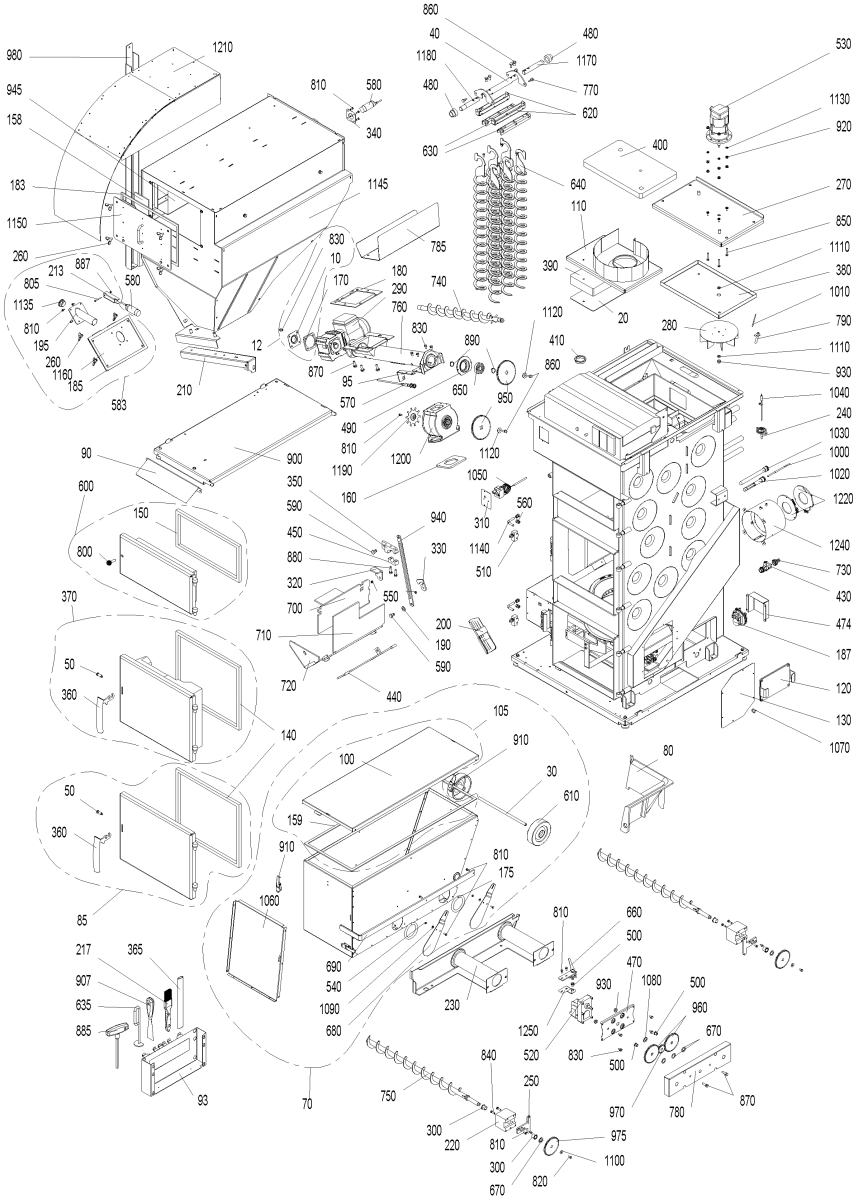
860
40
480
1180
1170
480
770
620
630
530
1130
920
400
640
270
110
850
1110
380
1010
790
1110
930
1040
240
1030
1000
1020
1220
1240
730
430
474
187
120
130
1070
980
1210
945
158
810
580
340
183
1145
1150
260
213
887
805
580
1135
810
195
260
1160
185
583
830
10
170
180
290
760
785
740
830
890
12
870
95
570
490
810
1190
1200
650
950
1120
410
860
20
280
90
900
350
160
1050
560
310
1140
510
600
150
590
450
880
320
700
940
330
550
800
370
710
200
190
590
720
440
50
360
140
105
910
100
30
610
80
50
360
159
910
810
175
1060
85
217
365
907
635
885
690
540
1090
680
230
810
660
500
470
930
1080
500
960
670
1250
520
830
500
840
250
750
970
780
870
300
220
810
300
670
975
1100
820
93
70

Item no.	Article no.	Description	Serialnumber from	Serialnumber to
10	047423	Motor cover plate for BioWIN XL 35-60	0	9999999999999999
20	047156	Insulating stone cover for BioWIN XL35-60	0	9999999999999999
30	043523	Axis ash container for BioWIN 10-26 (Only BioWIN Exklusiv), BioWIN XL 35-60	0	9999999999999999
40	047063	Axle for heating surface cleaning for BioWIN XL 35-60	0	9999999999999999
50	013806	Axle for door handle for LogWIN Premium 180-505, BioWIN XL 35-60,EasyWIN Klassik/Premium 180	0	9999999999999999
60	005064	Connection pipe curved BW60	0	9999999999999999
70	047562	BIO9 Ash container, assembled for BioWIN XL 35-60	0	9999999999999999
80	007320	Ash wedge for BioWIN XL 35-60	0	9999999999999999
85	047977	Ash door complete for BioWIN XL 35-60	0	9999999999999999
90	047606	Ramp for ash box for BioWIN XL 35-60	0	9999999999999999
93	042743	Holder for cleaning equipments for VarioWIN, LogWIN Premium 180-505,SilvaWIN,BioWIN XL35-60,EasWIN Klassik/Premium 180	0	9999999999999999
95	047417	Clip for proximity switch for BioWIN XL 35-60	0	9999999999999999
100	047563	Ash container cover for BioWIN XL 35-60	0	9999999999999999
105	054404	de: Deckel inkl. Dichtung zu Aschebehälter BioWIN XL	0	9999999999999999
110	047140	Blower cover with spiral for BioWIN XL 35-60	0	9999999999999999
120	047991	Coasting surface bottom cover for BioWIN XL 35-60	0	9999999999999999
130	047409	Air intake shaft cover for BioWIN XL 35-60	0	9999999999999999
140	047037	Rope seal for heating door / ash door for BioWIN XL 35-60	0	9999999999999999
150	047043	Rope seal for cleaning door for BioWIN XL 35-60	0	9999999999999999
158	011155	Separator seal for BioWIN XL 35-60	0	9999999999999999
159	046665	Container seal	0	9999999999999999
160	047217	Downpipe seal for BioWIN XL 35-60	0	9999999999999999
170	047421	Auger motor seal for BioWIN XL 35-60	0	9999999999999999
175	051344	Seal for flange	0	9999999999999999
180	006842	Auger tube/reserve supply container seal 178x178x3mm for PMX, BioWIN 10-26, BioWIN XL35-60	0	9999999999999999
183	047993	Top maintenance cover seal for BioWIN XL 35-60	0	9999999999999999
185	047994	Bottom maintenance cover seal for BioWIN XL 35-60	0	9999999999999999
187	045404	Differential pressure watchdog	0	9999999999999999
190	047653	Baffle spacer for BioWIN XL 35-60	0	9999999999999999
200	047162	Down chute for BioWIN XL 35-60	0	9999999999999999
210	047985	Container fastening for BioWIN XL 35-60	0	9999999999999999
217	017094	WERL056 Flat brush 1 1/2" NO. 72753 for FireWIN, VarioWIN, BioWIN10-26, BioWIN XL 35-60	0	9999999999999999
220	044680	Ash removal flange, complete with bearing bushes for BioWIN 10-26 (Only BioWIN Exklusiv), BioWIN XL 35-60	0	9999999999999999
230	047548	Ash container flange for BioWIN XL 35-60	0	9999999999999999
240	043756	Combustion chamber sensor flange for BioWIN10-26, BioWIN XL 35-60	0	9999999999999999
250	047539	Ash conveyor flange plate for BioWIN XL 35-60	0	9999999999999999
260	019408	M8x16 butterfly screw, DIN 316 for BioWIN XL 35-60	0	9999999999999999
270	047989	Blower cover for BioWIN XL 35-60	0	9999999999999999
280	047354	Blower wheel Ø 180 for BioWIN XL 35-60	0	9999999999999999
290	044664	Geared motor for auger 7,8 RPM, pluggable conversion instructions for use are enclosed by PMX21/26 for BioWIN 21/26, BioWIN XL 35-	0	9999999999999999
300	012508	Friction bearing with connector	0	9999999999999999
310	047611	STL retaining plate for BioWIN XL 35-60	0	9999999999999999
320	047674	Left baffle holder for BioWIN XL 35-60	0	9999999999999999
330	047491	Right baffle holder for BioWIN XL 35-60	0	9999999999999999
340	047461	Holder for fill level switch for BioWIN XL 35-60	0	9999999999999999
350	007278	Baffle top lever for BioWIN XL 35-60	0	9999999999999999
360	048811	Boiler handle	0	9999999999999999
370	047039	Heating door, painted grey for BioWIN XL 35-60	0	9999999999999999
380	047144	Blower box insulating plate for BioWIN XL 35-60	0	9999999999999999
390	047154	Blower box insulating stone, Vermiculite 500kg/m³ for BioWIN XL 35-60	0	9999999999999999
400	047142	Blower cover insulation for BioWIN XL 35-60	0	9999999999999999

Item no.	Article no.	Description	Serialnumber from	Serialnumber to
410	004096	Cable feed-through 2400 black Ø50	0	9999999999999999
420	047997	Edge protection	0	9999999999999999
430	004385	KFE cock	0	9999999999999999
440	047660	Baffle flap for BioWIN XL 35-60	0	9999999999999999
450	007279	Baffle terminal block for BioWIN XL 35-60	0	9999999999999999
460	007328	Capacitor for motor 0.68µF for PMX from batch 11, BioWIN XL 35-60	0	9999999999999999
470	047547	Ash conveyor bracket for BioWIN XL 35-60	0	9999999999999999
474	048185	Pressure watchdog bracket for BioWIN XL 35-60	0	9999999999999999
480	047416	Heating surface cleaning bearing for BioWIN XL 35-60	0	9999999999999999
490	007086	Bearing bush, diameter 92x17mm for VarioWIN, BioWIN XL 35-60	0	9999999999999999
500	006745	Ash conveyor bearing bush	0	9999999999999999
510	007128	Microswitch Z-15GQ-B for LogWIN Premium 180-505, BioWIN XL 35-60	0	9999999999999999
520	044665	Motor	0	9999999999999999
530	044158	Blower motor with cable for blower for SilvaWIN, LogWIN, FireWIN, BioWIN XL 35-60, EasyWIN Premium 180, LogWIN Premium 180-505	0	9999999999999999
540	016586	Hexagon nut M5 DIN 934	0	9999999999999999
550	016596	Nut DIN 934 - M6 - A2 for VarioWIN, FireWIN, BioWIN10-26, BioWIN XL 35-60	0	9999999999999999
560	015992	Nut M8 DIN 934 V2 - LogWIN Klassik pellet ready	0	9999999999999999
570	006832	Proximity switch M12, inductive	0	9999999999999999
580	007821	Proximity switch EC 3025 NPAPL	0	9999999999999999
590	013810	Shoulder screw M10 x 10 for BioWIN XL 35-60	0	9999999999999999
600	047045	Cleaning door, painted grey for BioWIN XL 35-60	0	9999999999999999
610	006888	Wheel AG 125-12	0	9999999999999999
620	047064	Top cleaning profile for BioWIN XL 35-60	0	9999999999999999
630	047065	Bottom cleaning profile for BioWIN XL 35-60	0	9999999999999999
635	048123	Cleaning scraper for downpipe for BioWIN XL 35-60	0	9999999999999999
640	047059	Cleaning auger for BioWIN XL 35-60	0	9999999999999999
650	012499	Grooved ball bearing	0	9999999999999999
660	043816	Mixer, complete painted grey for BioWIN XL 35-60, BioWIN 10-26 (Only BioWIN Exklusiv)	0	9999999999999999
665	006201	Suction tube for BioWIN XL 35-60 *not shown	0	9999999999999999
670	007182	Washer 16x22x1, DIN 988 for BioWIN XL 35-60	0	9999999999999999
680	047564	Ash container slider for BioWIN XL 60	0	9999999999999999
690	047566	Ash container slider handle for BioWIN XL 60	0	9999999999999999
700	047661	Baffle 1 for BioWIN XL 60	0	9999999999999999
710	047644	Baffle 2 for BioWIN XL 60	0	9999999999999999
720	047492	Baffle shield for BioWIN XL 60	0	9999999999999999
730	004386	Hose grommet, union nut and seal for KFE ball valve for BioWIN 10-26, BioWIN XL 35-60,LogWIN Premium 180-505	0	9999999999999999
740	047349	Pellet auger for BioWIN XL 60	0	9999999999999999
750	047537	Ash conveyor auger for BioWIN XL 60	0	9999999999999999
760	047348	Pellet auger tube for BioWIN XL 60	0	9999999999999999
770	006756	Screw M6 for heating surface cleaning for PMX,BioWIN 10-26,FireWIN, BioWIN XL 35-60, LogWIN Premium 180-505	0	9999999999999999
780	047552	Ash conveyor protection plate for BioWIN XL 60	0	9999999999999999
790	041498	Protective tube for exhaust gas sensor	0	9999999999999999
800	016713	ASN0251 Hexagon screw M10x35, DIN 933 for SilvaWIN, BioWIN XL 35-60, fittings cabinet Vesto 200	0	9999999999999999
810	031545	Hexagon screw M5x12 DIN 7500 (not ilustrated)	0	9999999999999999
820	017051	Hexagon screw M6x12 DIN 933 (not illustrated)	0	9999999999999999
830	024759	Hexagon screw DIN 933 - M6x16 - 8.8 - galvanised for VarioWIN	0	9999999999999999
840	015471	Hexagon screw M6x20 DIN 933	0	9999999999999999
850	021519	Hexagon screw M6x35,DIN 933 for BioWIN XL 35-60	0	9999999999999999
860	017872	Hexagon screw M8x16, DIN 933 for BioWIN XL 35-60	0	9999999999999999
870	017191	Hexagon screw M8x25 DIN 933	0	9999999999999999
880	013801	Hexagon screw M8x30, stainless steel, DIN933 for BioWIN XL 35-60	0	9999999999999999

Item no.	Article no.	Description	Serialnumber from	Serialnumber to
885	027392	Hexagon pin key with T-handle 10x200 for VarioWIN, BioWIN XL 35-60	0	9999999999999999
890	016171	Locking ring Ø20x1.2	0	9999999999999999
900	047986	Pellet tank base for BioWIN XL 60	0	9999999999999999
907	009540	Spatula	0	9999999999999999
910	009546	Spring lock	0	9999999999999999
920	016566	Hexagon nut with flange and gearing M6	0	9999999999999999
930	016553	Hexagon nut M8 with flange and gearing	0	9999999999999999
940	047652	Baffle rod for BioWIN XL 60	0	9999999999999999
945	047959	Dust separator for integral fuel hopper for BioWIN XL 60	0	9999999999999999
950	047410	Spur gear, 67 teeth for BioWIN XL 60	0	9999999999999999
960	047544	Ash conveyor spur gear for BioWIN XL 60	0	9999999999999999
970	047543	Spur gear M2 Z20	0	9999999999999999
975	045771	Spur gear M2 Z45	0	9999999999999999
980	047304	Rear container support for BioWIN XL 60	0	9999999999999999
990	047460	Front container support for BioWIN XL 60	0	9999999999999999
1000	502186	MES009M Immersion sensor	0	9999999999999999
1010	006820	MES007 Immersion sensor (exhaust gas sensor) Pt 1000 for PMX, FireWIN, VarioWIN, BioWIN 10-26, BioWIN XL 35-60	0	9999999999999999
1020	005452	OK-915 Immersion sleeve (129 mm) No.55501.04 for EKX,OK/E,GWX,KSN,ZHN,OK-915,ETX,SNX,FKX,MIRA,FireWIN,VestoWIN Klassik 170-220,	0	9999999999999999
1030	042028	Immersion sleeve 1/2“ 180x16 mm for ETX/SNX, KSL032,NBS,NBL,FAX,ASL,FKV,KSL,ZHN,HMX,JetWin, BioWIN XL 35-60	0	9999999999999999
1040	007626	Thermocouple	0	9999999999999999
1050	005672	Thermostat LS1+100-6U	0	9999999999999999
1060	047561	Ash container partition plate for BioWIN XL 60	0	9999999999999999
1070	003208	Grommet 10x17.5x1.2	0	9999999999999999
1080	017183	U-Washer DIN 125B - M12 - galvanised for VarioWIN, FireWIN, BioWIN XL 35-60	0	9999999999999999
1090	018309	Disc 5 DIN134	0	9999999999999999
1100	031753	Disc 6 ISO 7093	0	9999999999999999
1110	024767	Washer DIN 125 - M8 - galvanised, ISO 7089 for VarioWIN, BioWIN 10-26, BioWIN XL 35-60, EasyWIN Premium 180	0	9999999999999999
1120	031755	Disc 8 ISO 7093	0	9999999999999999
1130	020397	Washer M6, DIN125, polyamide, 6.6 for BioWIN 10-26,BioWIN XL 35-60	0	9999999999999999
1140	043426	Locking bracket for heating door / ash door for SilvaWIN,LogWIN Premium 180-505, BioWIN XL 35-60, EasyWIN Klassik/Premium 180	0	9999999999999999
1145	047296	BIO6 Integral fuel hopper with base for BioWIN XL 35-60	0	9999999999999999
1150	047451	Top maintenance cover for integral fuel hopper for BioWIN XL 35-60	0	9999999999999999
1160	051338	Conversion kit proximity switch bottom for BioWIN XL35-60	0	9999999999999999
1170	047490	Rear shaft for coasting surface cleaning for BioWIN XL 60	0	9999999999999999
1180	047489	Front shaft for coasting surface cleaning for BioWIN XL 60	0	9999999999999999
1190	044614	Toothed washer for FireWIN, BioWIN XL 35-60, VarioWIN	0	9999999999999999
1200	009570	Rotary feeder for BioWIN XL 35-60	0	9999999999999999
1210	047314	Feed for BioWIN XL 60	0	9999999999999999
1220	051672	Intake air orifice - BioWIN XL 350	0	9999999999999999
1240	048181	Air intake fitting for BioWIN XL 60	0	9999999999999999
1250	047907	Z-bracket for mixer for BioWIN XL 60	0	9999999999999999

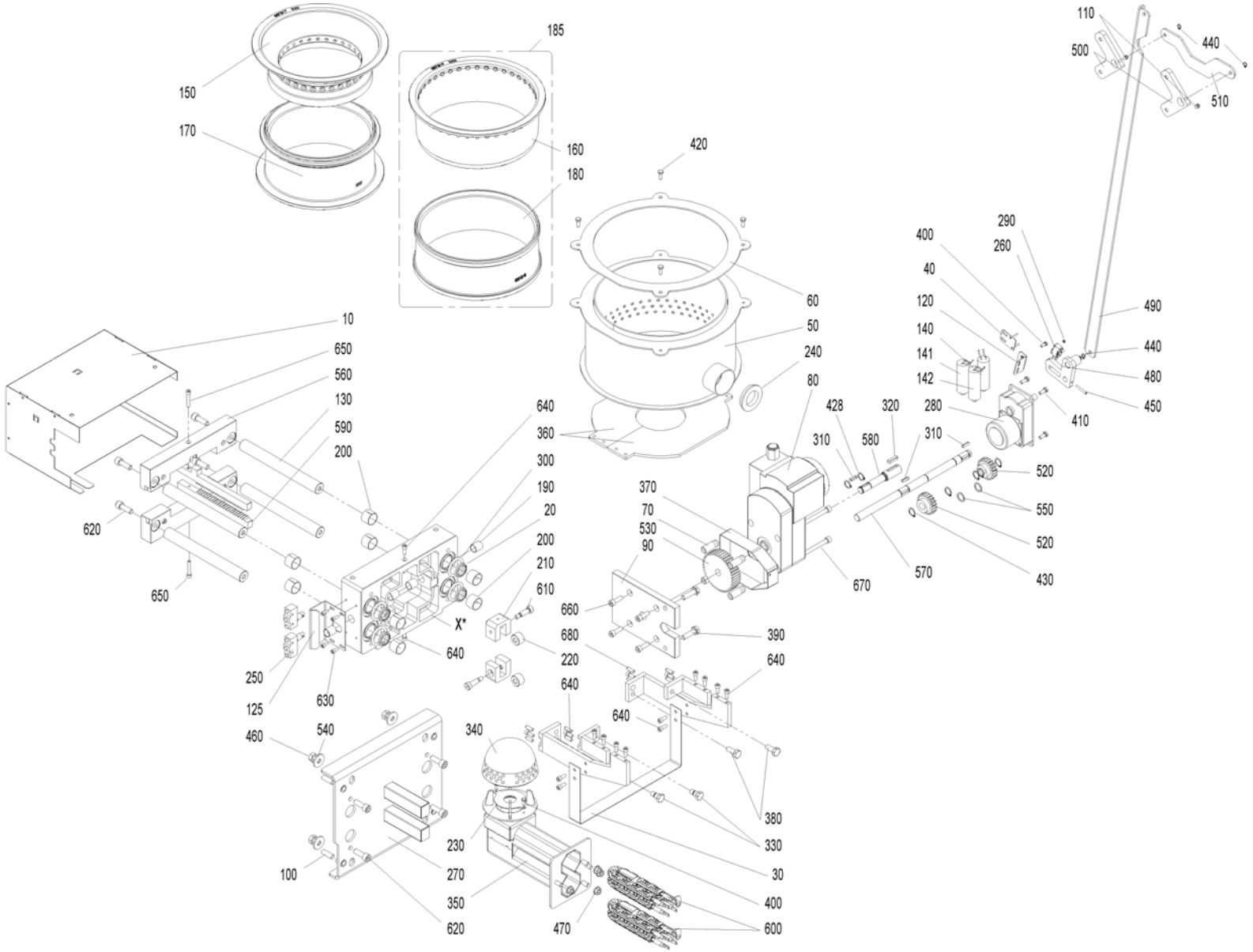
110
500
440
510
185
150
170
160
180
420
290
260
400
40
120
140
141
142
490
440
480
450
410
60
50
240
80
10
650
560
130
590
200
640
360
300
190
20
200
210
610
X*
640
620
650
250
125
630
460
540
100
230
270
350
620
340
470
660
680
220
640
640
640
380
330
30
400
600
370
70
530
90
428
320
310
580
310
280
520
550
520
430
570
670
390

Item no.	Article no.	Description	Serialnumber from	Serialnumber to
10	046713	Ash removal cover for BioWIN XL 60	0	99999999999999999
20	047960	Scraper 8 25/32/3,5/5,15 FPM for BioWIN XL 35-60F	0	99999999999999999
30	047496	Front ash agitator for BioWIN XL 60	0	99999999999999999
40	047983	Microswitch retainer for BioWIN XL 60	0	99999999999999999
50	047271	Burner for BioWIN XL 60	0	99999999999999999
60	047654	Burner seal, 3mm for BioWIN XL 60	0	99999999999999999
70	012550	Motor spacer for BioWIN XL 35-60	0	99999999999999999
80	007106	Gearmotor with connection cable, type: FGA 53 / 4DEKG 56 # for VarioWIN, FireWIN from batch 6, BioWIN XL 35-60	0	99999999999999999
90	012552	Drive flange for BioWIN XL 45-60	0	99999999999999999
100	033535	Setscrew M10x30, DIN 913 for BioWIN XL 35-60	0	99999999999999999
110	033112	Setscrew M8x10 DIN916	0	99999999999999999
120	047981	Microswitch holder for BioWIN XL 60	0	99999999999999999
125	047757	Ash removal microswitch holder for BioWIN XL 60	0	99999999999999999
130	007178	Ash removal bar for BioWIN XL 35-60	0	99999999999999999
140	007335	Capacitor for motor F48/3 0.82 µF, for 3-way changeover unit for BioWIN XL 35-60	0	99999999999999999
145	053644	Cable for ignition element BioWIN XL	0	99999999999999999
150	007317	Cone, top part for BioWIN XL 35	0	99999999999999999
170	007316	Cone, bottom part for BioWIN XL 35	0	99999999999999999
190	012509	Friction bearing - bushing PAP 1620 P10 (Øi16 x Øa18 x 20)	0	99999999999999999
200	007184	Bearing 25x20, Permaglide PAP 2520 P10 for BioWIN XL 35-60	0	99999999999999999
210	007174	Rod bearing bracket for BioWIN XL 35-60	0	99999999999999999
220	007180	Rod roller for BioWIN XL 35-60	0	99999999999999999
230	047425	Primary air choke for BioWIN XL 35/45	0	99999999999999999
240	047966	Secondary air choke for BioWIN XL 35/60	0	99999999999999999
250	006936	Ash removal microswitch Z-15GQ21-B for 3-way changeover unit for PMX, BioWIN XL 35-60	0	99999999999999999
260	009277	Air control microswitch	0	99999999999999999
270	047990	Ash removal installation bracket for BioWIN XL 60	0	99999999999999999
280	046617	Gear motor with condense, for 3-way changeover unit for BioWIN XL 35-60	0	99999999999999999
290	016551	Hexagon nut M3 DIN 934	0	99999999999999999
300	012441	O-ring 34.29 x 5.33 for BioWIN XL 35-60	0	99999999999999999
310	007186	Feather key 5x5x20, DIN 6885 for BioWIN XL 35-60	0	99999999999999999
320	006766	Feather key, without tightening DIN6885 A 6x6x28 mm for PMX, BioWIN10-26, FireWIN, VarioWIN, BioWIN XL 35-60	0	99999999999999999
330	013802	Shoulder screw M10 x 12 for BioWIN XL 35-60	0	99999999999999999
340	048950	Primary air pin for BioWIN XL 35-60	0	99999999999999999
350	047281	Primary air tube for BioWIN XL 60	0	99999999999999999
360	047274	Grate plate for BioWIN XL 35-60	0	99999999999999999
370	047286	Spur gear protection for BioWIN XL 60	0	99999999999999999
380	020060	Hexagon screw M10x20 for BioWIN XL 35-60	0	99999999999999999
390	016712	Hexagon screw M10x35, DIN 933 for BioWIN XL 35-60	0	99999999999999999
400	031545	Hexagon screw M5x12 DIN 7500 (not ilustrated)	0	99999999999999999
410	031549	Hexagon screw M6x12 DIN 7500	0	99999999999999999
420	024768	Hexagon screw M6x16, DIN 993 for BioWIN XL 35-60	0	99999999999999999
430	007181	Locking ring 16x1 for BioWIN XL 35-60	0	99999999999999999
440	016165	Circlip DIN471 - 8 x 0.8 for BioWIN 10-26 (Only BioWIN Exklusiv), BioWIN XL 35-60	0	99999999999999999
450	018665	Clamping pin 4x30, DIN 1481, for 3-way changeover unit for BioWIN XL 35-60 * not illustrated	0	99999999999999999
460	016567	Hexagon nut M10 with flange and gearing (not illustrated)	0	99999999999999999
470	016553	Hexagon nut M8 with flange and gearing	0	99999999999999999
480	047665	Coasting surface cleaning rod 1 for BioWIN XL 60	0	99999999999999999
490	047468	Coasting surface cleaning rod 2 for BioWIN XL 60	0	99999999999999999
500	047666	Coasting surface cleaning rod 3 for BioWIN XL 60	0	99999999999999999
510	047470	Coasting surface cleaning rod 4 for BioWIN XL 60	0	99999999999999999

Item no.	Article no.	Description	Serialnumber from	Serialnumber to
520	007179	Ash removal spur gear Z22, M2 for BioWIN XL 35-60	0	99999999999999999
530	012551	Motor spur gear for BioWIN XL 45/60	0	99999999999999999
540	007170	U-washer M10 for BioWIN XL 60	0	99999999999999999
550	007182	Washer 16x22x1, DIN 988 for BioWIN XL 35-60	0	99999999999999999
560	007173	Ash removal connector for BioWIN XL 35-60	0	99999999999999999
570	007176	Ash removal shaft for BioWIN XL 35-60	0	99999999999999999
580	012553	Ash removal motor shaft for BioWIN XL 35-60	0	99999999999999999
590	007188	Ash removal rod for BioWIN XL 35-60	0	99999999999999999
600	055201	Ignition element BioWIN10-26, FireWIN from lot 15, VarioWIN from lot 15 BioWIN XL, LWK	0	99999999999999999
610	017048	Shoulder screw M8 10x25 ISO 7379	0	99999999999999999
620	033534	Cylinder screw M10x30, DIN 91 for BioWIN XL 35-60	0	99999999999999999
630	004625	Cylinder screw M5x12, DIN 912 for BioWIN XL 35-60	0	99999999999999999
640	033532	Cylinder screw M6x16, DIN 912 for BioWIN XL 35-60	0	99999999999999999
650	033533	Cylinder screw M6x35, DIN 912 for BioWIN XL 35-60	0	99999999999999999
660	016778	Cylinder screw M8x25, DIN 912 for BioWIN XL 35-60	0	99999999999999999
670	017049	Cylinder-head screw, hexagon socket ISO 4762 - M8x70 - 8.8 - galva. (DIN 912) for VarioWIN, FireWIN, BioWIN XL 35-60	0	99999999999999999
680	017544	Cylinder pin 6x20 for BioWIN XL 35-60	0	99999999999999999

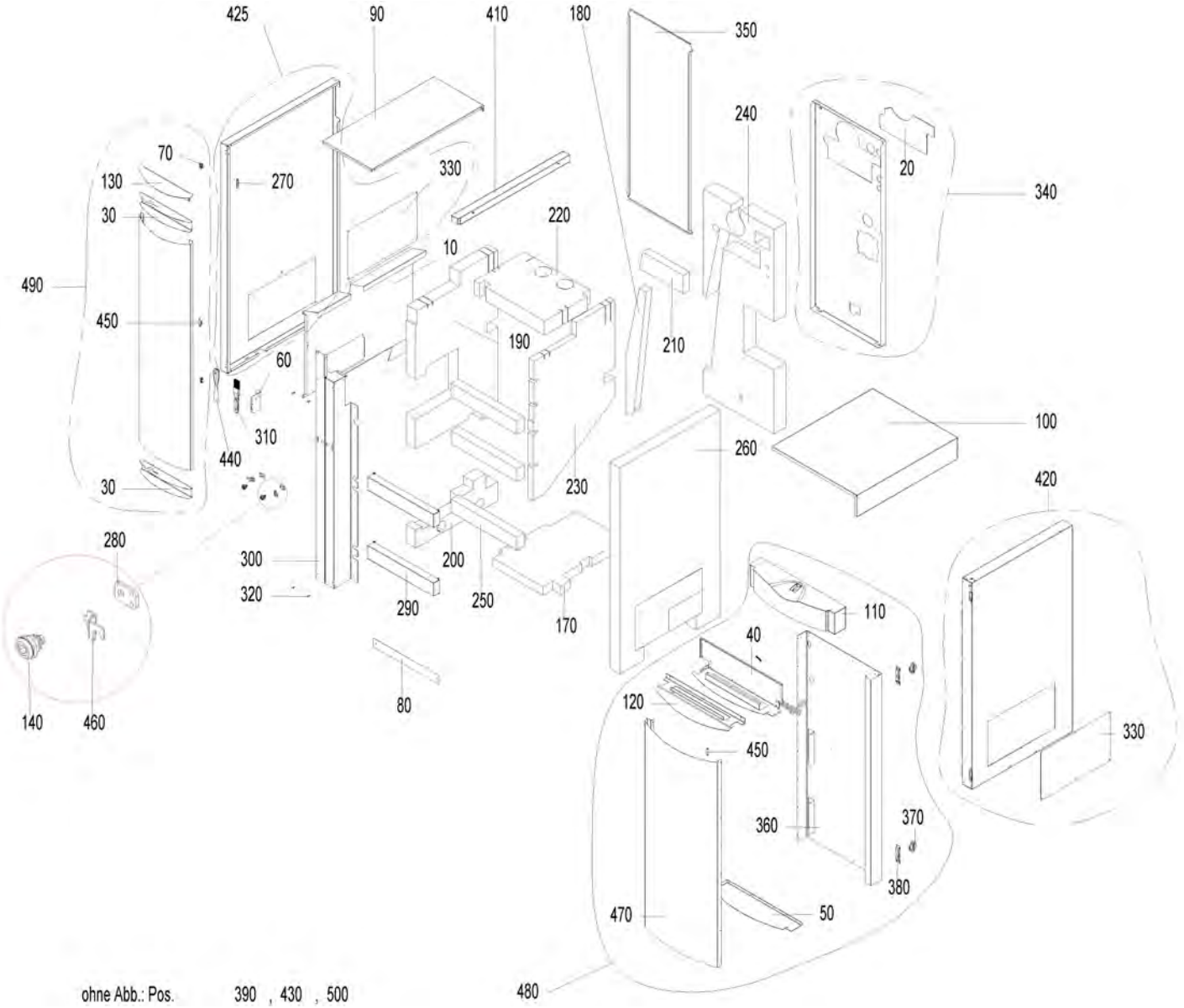
425
90
410
180
350
240
20
340
70
130
30
270
330
220
10
490
450
190
210
60
310
440
30
260
100
230
420
280
300
200
320
290
250
170
110
40
140
460
80
120
450
330
360
370
380
470
50
480
ohne Abb.: Pos. 390 , 430 , 500

Item no.	Article no.	Description	Serialnumber from	Serialnumber to
10	047567	Burner cover plate for BioWIN XL 60	0	99999999999999999
20	047551	Rear wall cover plate WioWIN 60kW	0	99999999999999999
30	047342	Door cover plate for BioWIN XL 60	0	99999999999999999
40	047331	Top door cover strip for BioWIN XL 60	0	99999999999999999
50	047330	Bottom door cover strip for BioWIN XL 60	0	99999999999999999
60	047568	Cover bracket for BioWIN XL 60	0	99999999999999999
70	044677	Bands 96-140 (hinge for left door) with fastening screw for BioWIN 10-26, BioWIN XL 35-60	0	99999999999999999
80	047559	Bottom cover for BioWIN XL 60	0	99999999999999999
90	047595	Top pellet container cover, RAL 7044 for BioWIN XL 60	0	99999999999999999
100	047592	Control panel cover, RAL 7044 for BioWIN XL 60	0	99999999999999999
110	047603	Door cover for BioWIN XL 60	0	99999999999999999
120	047588	Door liner cover for BioWIN XL 60	0	99999999999999999
130	047602	Pellet container door liner cover, RAL 7044 for BioWIN XL 60	0	99999999999999999
140	012256	Turning bolt	0	99999999999999999
170	007266	Floor insulation for BioWIN XL 60	0	99999999999999999
180	007259	Boiler insulation insert for BioWIN XL 60	0	99999999999999999
190	007264	Boiler insulation, left for BioWIN XL 60	0	99999999999999999
200	007263	Boiler insulation, bottom left for BioWIN XL 60	0	99999999999999999
210	007258	Boiler insulation, coasting surface for BioWIN XL 60	0	99999999999999999
220	007255	Boiler insulation, top for BioWIN XL 60	0	99999999999999999
230	007265	Boiler insulation, right for BioWIN XL 60	0	99999999999999999
240	007257	Boiler insulation, rear wall for BioWIN XL 60	0	99999999999999999
250	007267	Centre panel insulation for BioWIN XL 60	0	99999999999999999
260	007260	Side panel insulation for BioWIN XL 60	0	99999999999999999
270	047555	L-bracket for BioWIN XL 60	0	99999999999999999
280	047891	Driver	0	99999999999999999
290	047558	Cladding centre panel BioWIN XL 35-60	0	99999999999999999
300	047590	Cladding centre panel for BioWIN XL 60	0	99999999999999999
310	017094	WERL056 Flat brush 1 1/2" NO. 72753 for FireWIN, VarioWIN, BioWIN10-26, BioWIN XL 35-60	0	99999999999999999
320	000299	Silicone buffer	0	99999999999999999
330	047593	Inspection cover for BioWIN XL 60	0	99999999999999999
340	048187	Boiler rear wall for BioWIN XL 60	0	99999999999999999
350	047355	Left rear wall for BioWIN XL 60	0	99999999999999999
360	047569	Rear wall of panelling for BioWIN XL 60	0	99999999999999999
370	007103	Cladding door hinge for LogWIN Premium 180-505, VarioWIN, BioWIN XL 35-60	0	99999999999999999
380	047328	Hinge bracket for BioWIN XL 60	0	99999999999999999
390	031545	Hexagon screw M5x12 DIN 7500 (not ilustrated)	0	99999999999999999
410	047594	Pellet container right side panel for BioWIN XL 60	0	99999999999999999
420	048188	Right side panel for BioWIN XL 60	0	99999999999999999
425	051431	Cladding door left BioWIN 35-60	0	99999999999999999
430	031096	Countersinking screw M4x20 DIN965 gv KS (not illustrated)	0	99999999999999999
440	009540	Spatula	0	99999999999999999
450	047893	Clamping plate	0	99999999999999999
460	047892	Locking plate	0	99999999999999999
470	047571	Door liner cladding for BioWIN XL 35-60	0	99999999999999999
480	047587	Boiler panelling for BioWIN XL 60	0	99999999999999999
490	047601	Pellet container panelling for BioWIN XL 60	0	99999999999999999
500	018139	Cylinder screw 4.2x13 DIN7981SP (not illustrated)	0	99999999999999999

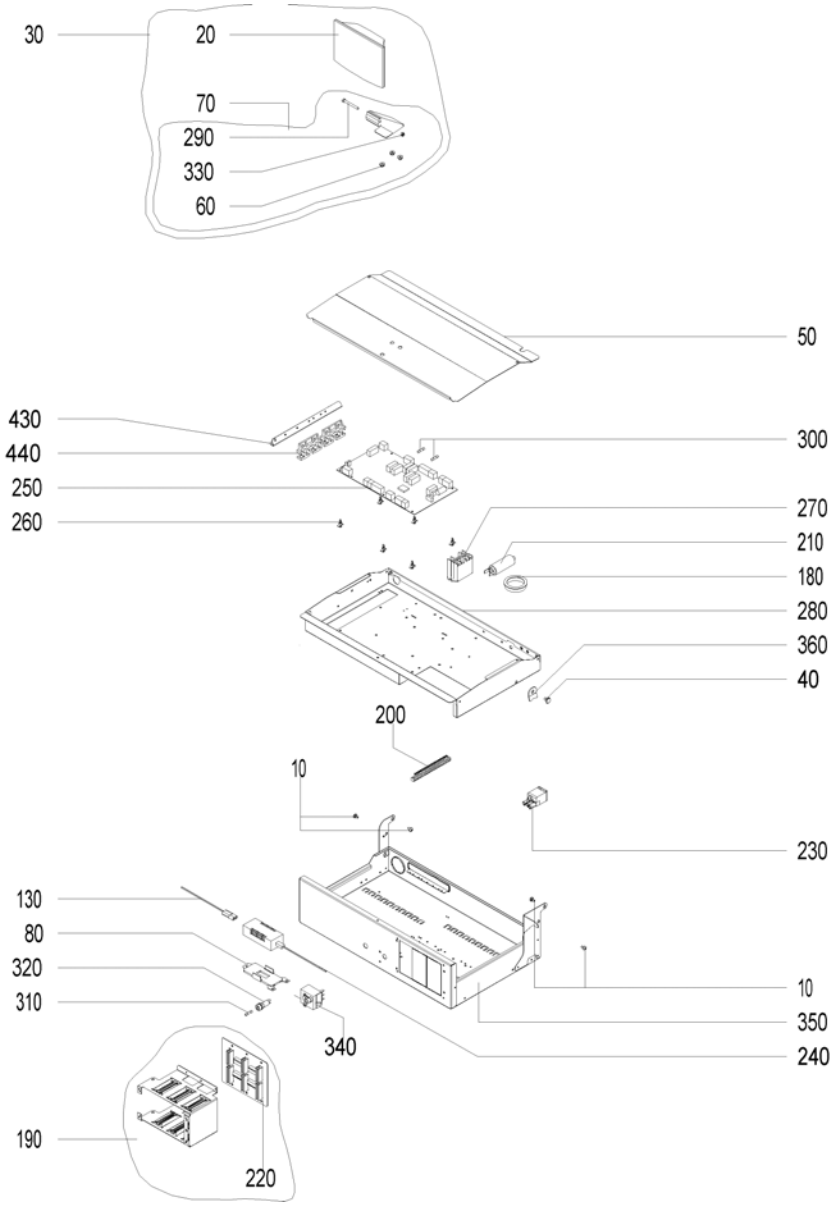
30
20
70
290
330
60
50
430
440
250
260
300
270
210
180
280
360
40
200
10
230
130
80
320
310
340
10
350
240
190
220

Item no.	Article no.	Description	Serialnumber from	Serialnumber t
10	016006	Collar screw M4 x 11.8 mm, galvanised for BioWIN 10-26,BioWIN XL 35-60	0	9999999999999
20	011985	InfoWINplus HW C4 SW V4.10 BioWIN, LWP, JetWIN, EcoWIN	0	9999999999999
30	048008	Display and operating module (InfoWIN) complete for BioWIN XL 35-60	0	9999999999999
40	033091	Bolt DIN 1445 - 8h11 x 4 x 10 - St - galvanised for VarioWIN, FireWIN, BioWIN 10-26, BioWIN XL 35-60	0	9999999999999
50	042998	Control panel cover for BioWIN 10-26, SilvaWIN, BioWIN XL 35-60	0	9999999999999
60	017001	Flanged nut M5 for BioWIN 10-26, BioWIN XL 35-60	0	9999999999999
70	046311	Housing foot InfoWIN cpl. with fastening material for LogWIN Premium 180-505,BioWIN 10-26,SWK-T,BioWIN XL 35-60	0	9999999999999
80	002050	Power supply unit 002049 holding plate for VarioWIN, FireWIN, BioWIN 10-26, BioWIN XL 35-60, LogWIN Premium 180-505	0	9999999999999
90	048285	Differential pressure watchdog cable for BioWIN XL 35-60 * not illustrated	0	9999999999999
100	048282	Coasting surface cleaning limit switch cable for BioWIN XL 35-60 *not illustrated	0	9999999999999
110	047933	Cable for microswitch grate and integral fuel hopper empty for BioWIN XL 35-60 * not illustrated	0	9999999999999
120	048284	Cable for motor heating surface cleaning and ash removal for BioWIN XL 35-60 * not illustrated	0	9999999999999
130	002051	Power supply unit cable FRIWO (primary power line) for VarioWIN, FireWIN, BioWIN 10-26, BioWIN XL 35-60, LogWIN Premium 180-505	0	9999999999999
140	047683	Cable for grate motor and ignition for BioWIN XL 35-60 * not illustrated	0	9999999999999
150	047930	Cable for auger conveyor rotation detection for BioWIN XL 35-60 * not illustrated	0	9999999999999
160	047684	Cable for auger motor for BioWIN XL 35-60 * not illustrated	0	9999999999999
170	044360	STB auger tube cable for BioWIN 10-26, BioWIN XL 35-60 * not illustrated	0	9999999999999
175	047616	Cable for door switch for BioWIN XL 35-60 * not illustrated	0	9999999999999
180	004096	Cable feed-through 2400 black Ø50	0	9999999999999
190	046130	Cable harness for MES control, new ET for BioWIN 10-26, BioWIN XL 35-60	0	9999999999999
200	009928	Terminal bar	0	9999999999999
210	007330	Condenser for motor MAB 500V, 3µF for HMX,PMX,SWK,BioWIN10-26,FireWIN,VarioWIN,BioWIN XL 35-60, EasyWIN Premium 180,LogWIN Premiu	0	9999999999999
220	046131	Module connection PCB, new ET for BioWIN10-26, BioWIN XL 35-60	0	9999999999999
230	041430	Mains connection socket 3-pin for MIRA,ETX,PMX,BioWIN10-26,LogWIN Premium 180-505,EasyWIN Premium 180,BioWIN XL 35-60, FireWIN	0	9999999999999
240	051645	Power supply unit 12V	0	9999999999999
250	011998	FMP board - B XL BioWIN XL	0	9999999999999
260	007609	PCB holder	0	9999999999999
270	005025	Power relay OMRON G7L-2A-BUB 200/240AC for PMX,BioWIN XL, BioWIN10-26,FireWIN,VarioWIN, BioWIN XL 35-60	0	9999999999999
280	043807	Control panel top part for BioWIN 10-26, SWK, BioWIN XL35-60	0	9999999999999
290	016214	Hexagon screw DIN931 M5 x 45, black for BioWIN XL 35-60	0	9999999999999
300	006900	Fuse 1 A T 5x20 ceramic tube	0	9999999999999
310	003228	6.3A fuse (not illustrated)	0	9999999999999
320	003663	Fuse holder	0	9999999999999
330	016728	Locknut M 5, DIN 985, black for BioWIN 10-26, BioWIN XL 35-60	0	9999999999999
340	005672	Thermostat LS1+100-6U	0	9999999999999
350	044223	Control panel bottom part complete, coated for BioWINT 10-26, BioWIN XL 35-60	0	9999999999999
360	043808	Locking arm for control panel for BioWIN 10-26, BioWIN XL 35-60	0	9999999999999
370	040926	Wago terminal block 11-pin orange (extra-low voltage) pre-assembled for BioWIN 10-26, BioWIN XL 35-60	0	9999999999999
380	009968	Wago terminal block 261; 13-pin orange extra-low voltage (no. 1-13), for VarioWIN, FireWIN, BioWIN 10-26, BioWIN XL 35-60 (*not il	0	9999999999999
390	006719	Wago terminal block 261 6-pce. heating requirement/probe switching for BioWIN 10-26, BioWIN XL 35-60 (*not illustrated)	0	9999999999999
400	009960	Wago terminal block 261; 8-pin 230V extnd. for VarioWIN, FireWIN, BioWIN10-26, BioWIN XL 35-60 (*not illustrated)	0	9999999999999
410	006720	Wago terminal block 261 1-9, 8-pce. Emergency door switch/probe switching for BioWIN, VarioWIN, FireWIN, BioWIN10-26, BioWIN XL 35	0	9999999999999
420	040925	Wago terminal block 8-pin blue/grey (230 V) pre-assembled for BioWIN 10-26, BioWIN XL 35-60 (*not illustrated)	0	9999999999999
430	044217	Strain relief bracket for SilvaWIN, BioWIN10-26, BioWIN XL 35-60	0	9999999999999
440	041914	Strain relief 4X, complete, assembled for ETX/SNX,PSX,GENIO/MultiWIN, SilvaWIN, BioWIN XL, BioWIN10-26, BioWIN XL 35-60	0	9999999999999

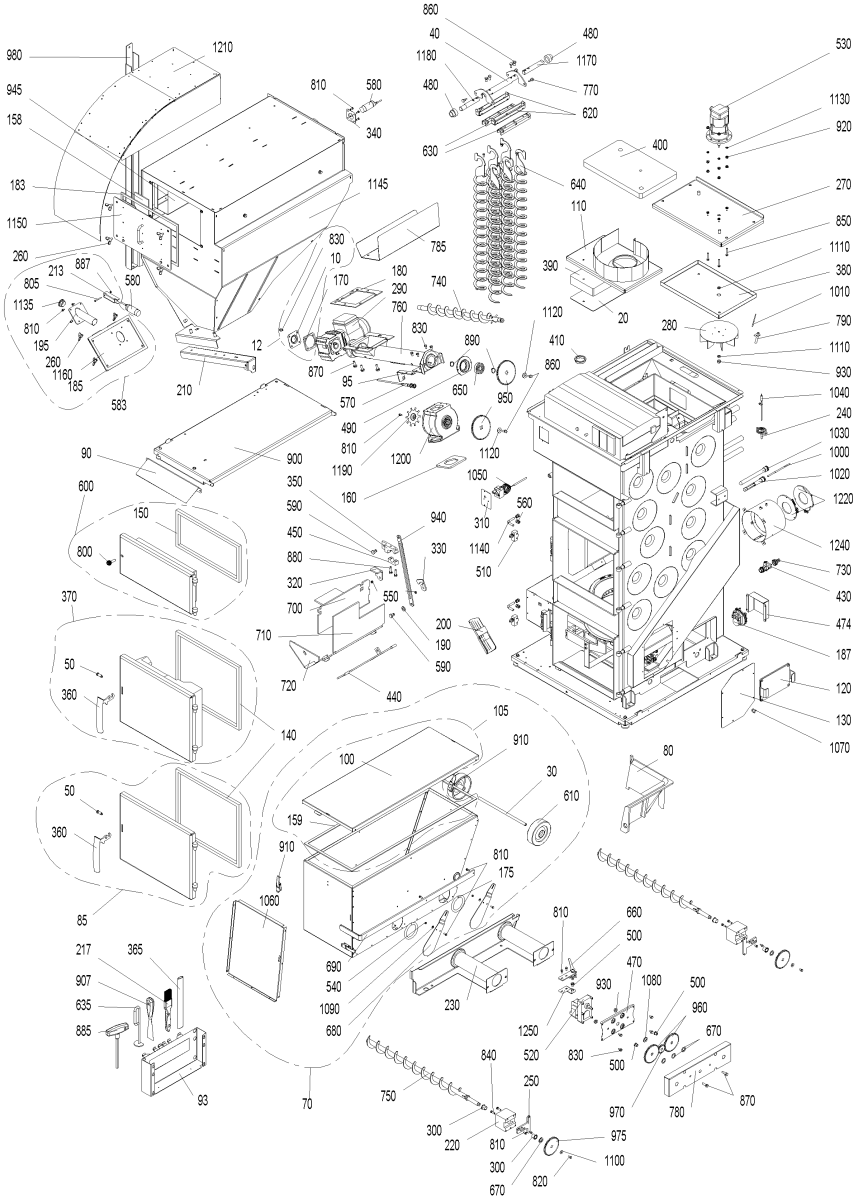
860
40
480
1180
1170
480
770
620
630
530
1130
920
400
640
270
110
850
1110
380
1010
790
1110
930
1040
240
1030
1000
1020
1220
1240
730
430
474
187
120
130
1070
980
1210
945
158
810
580
340
183
1145
1150
260
213
887
805
580
1135
810
195
260
1160
185
583
830
10
170
180
290
760
785
740
830
890
12
870
95
570
490
810
1190
1200
650
950
1120
410
860
20
280
90
900
350
160
1050
560
310
1140
510
600
150
590
450
880
320
700
940
330
550
800
370
710
200
190
590
720
440
50
360
140
105
910
100
30
610
80
50
360
159
910
810
175
1060
85
217
365
907
635
885
690
540
1090
680
230
810
660
500
470
930
1080
500
960
670
1250
520
830
500
840
250
750
970
780
870
300
220
810
300
670
820
975
1100
93
70

Item no.	Article no.	Description	Serialnumber from	Serialnumber to
10	047423	Motor cover plate for BioWIN XL 35-60	0	9999999999999999
12	054005	de: Abdeckplatte inkl. Dichtplatte und Schrauben zu Schneckenmotor BioWIN XL	0	9999999999999999
20	047156	Insulating stone cover for BioWIN XL35-60	0	9999999999999999
30	043523	Axis ash container for BioWIN 10-26 (Only BioWIN Exklusiv), BioWIN XL 35-60	0	9999999999999999
40	047063	Axle for heating surface cleaning for BioWIN XL 35-60	0	9999999999999999
50	013806	Axle for door handle for LogWIN Premium 180-505, BioWIN XL 35-60,EasyWIN Klassik/Premium 180	0	9999999999999999
60	005064	Connection pipe curved BW60	0	9999999999999999
70	047562	BIO9 Ash container, assembled for BioWIN XL 35-60	0	9999999999999999
80	007320	Ash wedge for BioWIN XL 35-60	0	9999999999999999
85	047977	Ash door complete for BioWIN XL 35-60	0	9999999999999999
90	047606	Ramp for ash box for BioWIN XL 35-60	0	9999999999999999
93	042743	Holder for cleaning equipments for VarioWIN, LogWIN Premium 180-505,SilvaWIN,BioWIN XL35-60,EasWIN Klassik/Premium 180	0	9999999999999999
95	047417	Clip for proximity switch for BioWIN XL 35-60	0	9999999999999999
100	047563	Ash container cover for BioWIN XL 35-60	0	9999999999999999
105	054404	de: Deckel inkl. Dichtung zu Aschebehälter BioWIN XL	0	9999999999999999
110	047140	Blower cover with spiral for BioWIN XL 35-60	0	9999999999999999
120	047991	Coasting surface bottom cover for BioWIN XL 35-60	0	9999999999999999
130	047409	Air intake shaft cover for BioWIN XL 35-60	0	9999999999999999
140	047037	Rope seal for heating door / ash door for BioWIN XL 35-60	0	9999999999999999
150	047043	Rope seal for cleaning door for BioWIN XL 35-60	0	9999999999999999
158	011155	Separator seal for BioWIN XL 35-60	0	9999999999999999
159	046665	Container seal	0	9999999999999999
160	047217	Downpipe seal for BioWIN XL 35-60	0	9999999999999999
170	047421	Auger motor seal for BioWIN XL 35-60	0	9999999999999999
175	051344	Seal for flange	0	9999999999999999
180	006842	Auger tube/reserve supply container seal 178x178x3mm for PMX, BioWIN 10-26, BioWIN XL35-60	0	9999999999999999
183	047993	Top maintenance cover seal for BioWIN XL 35-60	0	9999999999999999
185	047994	Bottom maintenance cover seal for BioWIN XL 35-60	0	9999999999999999
187	045404	Differential pressure watchdog	0	9999999999999999
190	047653	Baffle spacer for BioWIN XL 35-60	0	9999999999999999
200	047162	Down chute for BioWIN XL 35-60	0	9999999999999999
210	047985	Container fastening for BioWIN XL 35-60	0	9999999999999999
217	017094	WERL056 Flat brush 1 1/2" NO. 72753 for FireWIN, VarioWIN, BioWIN10-26, BioWIN XL 35-60	0	9999999999999999
220	044680	Ash removal flange, complete with bearing bushes for BioWIN 10-26 (Only BioWIN Exklusiv), BioWIN XL 35-60	0	9999999999999999
230	047548	Ash container flange for BioWIN XL 35-60	0	9999999999999999
240	043756	Combustion chamber sensor flange for BioWIN10-26, BioWIN XL 35-60	0	9999999999999999
250	047539	Ash conveyor flange plate for BioWIN XL 35-60	0	9999999999999999
260	019408	M8x16 butterfly screw, DIN 316 for BioWIN XL 35-60	0	9999999999999999
270	047989	Blower cover for BioWIN XL 35-60	0	9999999999999999
280	047354	Blower wheel Ø 180 for BioWIN XL 35-60	0	9999999999999999
290	044664	Geared motor for auger 7,8 RPM, pluggable conversion instructions for use are enclosed by PMX21/26 for BioWIN 21/26, BioWIN XL 35-	0	9999999999999999
300	012508	Friction bearing with connector	0	9999999999999999
310	047611	STL retaining plate for BioWIN XL 35-60	0	9999999999999999
320	047674	Left baffle holder for BioWIN XL 35-60	0	9999999999999999
330	047491	Right baffle holder for BioWIN XL 35-60	0	9999999999999999
340	047461	Holder for fill level switch for BioWIN XL 35-60	0	9999999999999999
350	007278	Baffle top lever for BioWIN XL 35-60	0	9999999999999999
360	048811	Boiler handle	0	9999999999999999
370	047039	Heating door, painted grey for BioWIN XL 35-60	0	9999999999999999
380	047144	Blower box insulating plate for BioWIN XL 35-60	0	9999999999999999
390	047154	Blower box insulating stone, Vermiculite 500kg/m³ for BioWIN XL 35-60	0	9999999999999999

Item no.	Article no.	Description	Serialnumber from	Serialnumber to
400	047142	Blower cover insulation for BioWIN XL 35-60	0	9999999999999999
410	004096	Cable feed-through 2400 black Ø50	0	9999999999999999
420	047997	Edge protection	0	9999999999999999
430	004385	KFE cock	0	9999999999999999
440	047660	Baffle flap for BioWIN XL 35-60	0	9999999999999999
450	007279	Baffle terminal block for BioWIN XL 35-60	0	9999999999999999
460	007328	Capacitor for motor 0.68µF for PMX from batch 11, BioWIN XL 35-60	0	9999999999999999
470	047547	Ash conveyor bracket for BioWIN XL 35-60	0	9999999999999999
474	048185	Pressure watchdog bracket for BioWIN XL 35-60	0	9999999999999999
480	047416	Heating surface cleaning bearing for BioWIN XL 35-60	0	9999999999999999
490	007086	Bearing bush, diameter 92x17mm for VarioWIN, BioWIN XL 35-60	0	9999999999999999
500	006745	Ash conveyor bearing bush	0	9999999999999999
510	007128	Microswitch Z-15GQ-B for LogWIN Premium 180-505, BioWIN XL 35-60	0	9999999999999999
520	044665	Motor	0	9999999999999999
530	044158	Blower motor with cable for blower for SilvaWIN, LogWIN, FireWIN, BioWIN XL 35-60, EasyWIN Premium 180, LogWIN Premium 180-505	0	9999999999999999
540	016586	Hexagon nut M5 DIN 934	0	9999999999999999
550	016596	Nut DIN 934 - M6 - A2 for VarioWIN, FireWIN, BioWIN10-26, BioWIN XL 35-60	0	9999999999999999
560	015992	Nut M8 DIN 934 V2 - LogWIN Klassik pellet ready	0	9999999999999999
570	006832	Proximity switch M12, inductive	0	9999999999999999
580	007821	Proximity switch EC 3025 NPAPL	0	9999999999999999
590	013810	Shoulder screw M10 x 10 for BioWIN XL 35-60	0	9999999999999999
600	047045	Cleaning door, painted grey for BioWIN XL 35-60	0	9999999999999999
610	006888	Wheel AG 125-12	0	9999999999999999
620	047064	Top cleaning profile for BioWIN XL 35-60	0	9999999999999999
630	047065	Bottom cleaning profile for BioWIN XL 35-60	0	9999999999999999
635	048123	Cleaning scraper for downpipe for BioWIN XL 35-60	0	9999999999999999
640	047059	Cleaning auger for BioWIN XL 35-60	0	9999999999999999
650	012499	Grooved ball bearing	0	9999999999999999
660	043816	Mixer, complete painted grey for BioWIN XL 35-60, BioWIN 10-26 (Only BioWIN Exklusiv)	0	9999999999999999
665	006201	Suction tube for BioWIN XL 35-60 *not shown	0	9999999999999999
670	007182	Washer 16x22x1, DIN 988 for BioWIN XL 35-60	0	9999999999999999
680	047564	Ash container slider for BioWIN XL 60	0	9999999999999999
690	047566	Ash container slider handle for BioWIN XL 60	0	9999999999999999
700	047661	Baffle 1 for BioWIN XL 60	0	9999999999999999
710	047644	Baffle 2 for BioWIN XL 60	0	9999999999999999
720	047492	Baffle shield for BioWIN XL 60	0	9999999999999999
730	004386	Hose grommet, union nut and seal for KFE ball valve for BioWIN 10-26, BioWIN XL 35-60,LogWIN Premium 180-505	0	9999999999999999
740	047349	Pellet auger for BioWIN XL 60	0	9999999999999999
750	047537	Ash conveyor auger for BioWIN XL 60	0	9999999999999999
760	047348	Pellet auger tube for BioWIN XL 60	0	9999999999999999
770	006756	Screw M6 for heating surface cleaning for PMX,BioWIN 10-26,FireWIN, BioWIN XL 35-60, LogWIN Premium 180-505	0	9999999999999999
780	047552	Ash conveyor protection plate for BioWIN XL 60	0	9999999999999999
790	041498	Protective tube for exhaust gas sensor	0	9999999999999999
800	016713	ASN0251 Hexagon screw M10x35, DIN 933 for SilvaWIN, BioWIN XL 35-60, fittings cabinet Vesto 200	0	9999999999999999
810	031545	Hexagon screw M5x12 DIN 7500 (not ilustrated)	0	9999999999999999
820	017051	Hexagon screw M6x12 DIN 933 (not illustrated)	0	9999999999999999
830	024759	Hexagon screw DIN 933 - M6x16 - 8.8 - galvanised for VarioWIN	0	9999999999999999
840	015471	Hexagon screw M6x20 DIN 933	0	9999999999999999
850	021519	Hexagon screw M6x35,DIN 933 for BioWIN XL 35-60	0	9999999999999999
860	017872	Hexagon screw M8x16, DIN 933 for BioWIN XL 35-60	0	9999999999999999
870	017191	Hexagon screw M8x25 DIN 933	0	9999999999999999

Item no.	Article no.	Description	Serialnumber from	Serialnumber to
880	013801	Hexagon screw M8x30, stainless steel, DIN933 for BioWIN XL 35-60	0	9999999999999999
885	027392	Hexagon pin key with T-handle 10x200 for VarioWIN, BioWIN XL 35-60	0	9999999999999999
890	016171	Locking ring Ø20x1.2	0	9999999999999999
900	047986	Pellet tank base for BioWIN XL 60	0	9999999999999999
907	009540	Spatula	0	9999999999999999
910	009546	Spring lock	0	9999999999999999
920	016566	Hexagon nut with flange and gearing M6	0	9999999999999999
930	016553	Hexagon nut M8 with flange and gearing	0	9999999999999999
940	047652	Baffle rod for BioWIN XL 60	0	9999999999999999
945	047959	Dust separator for integral fuel hopper for BioWIN XL 60	0	9999999999999999
950	047410	Spur gear, 67 teeth for BioWIN XL 60	0	9999999999999999
960	047544	Ash conveyor spur gear for BioWIN XL 60	0	9999999999999999
970	047543	Spur gear M2 Z20	0	9999999999999999
975	045771	Spur gear M2 Z45	0	9999999999999999
980	047304	Rear container support for BioWIN XL 60	0	9999999999999999
990	047460	Front container support for BioWIN XL 60	0	9999999999999999
1000	502186	MES009M Immersion sensor	0	9999999999999999
1010	006820	MES007 Immersion sensor (exhaust gas sensor) Pt 1000 for PMX, FireWIN, VarioWIN, BioWIN 10-26, BioWIN XL 35-60	0	9999999999999999
1020	005452	OK-915 Immersion sleeve (129 mm) No.55501.04 for EKX,OK/E,GWX,KSN,ZHN,OK-915,ETX,SNX,FKX,MIRA,FireWIN,VestoWIN Klassik 170-220,	0	9999999999999999
1030	042028	Immersion sleeve 1/2“ 180x16 mm for ETX/SNX, KSL032,NBS,NBL,FAX,ASL,FKV,KSL,ZHN,HMX,JetWin, BioWIN XL 35-60	0	9999999999999999
1040	007626	Thermocouple	0	9999999999999999
1050	005672	Thermostat LS1+100-6U	0	9999999999999999
1060	047561	Ash container partition plate for BioWIN XL 60	0	9999999999999999
1070	003208	Grommet 10x17.5x1.2	0	9999999999999999
1080	017183	U-Washer DIN 125B - M12 - galvanised for VarioWIN, FireWIN, BioWIN XL 35-60	0	9999999999999999
1090	018309	Disc 5 DIN134	0	9999999999999999
1100	031753	Disc 6 ISO 7093	0	9999999999999999
1110	024767	Washer DIN 125 - M8 - galvanised, ISO 7089 for VarioWIN, BioWIN 10-26, BioWIN XL 35-60, EasyWIN Premium 180	0	9999999999999999
1120	031755	Disc 8 ISO 7093	0	9999999999999999
1130	020397	Washer M6, DIN125, polyamide, 6.6 for BioWIN 10-26,BioWIN XL 35-60	0	9999999999999999
1140	043426	Locking bracket for heating door / ash door for SilvaWIN,LogWIN Premium 180-505, BioWIN XL 35-60, EasyWIN Klassik/Premium 180	0	9999999999999999
1145	047296	BIO6 Integral fuel hopper with base for BioWIN XL 35-60	0	9999999999999999
1150	047451	Top maintenance cover for integral fuel hopper for BioWIN XL 35-60	0	9999999999999999
1160	051338	Conversion kit proximity switch bottom for BioWIN XL35-60	0	9999999999999999
1170	047490	Rear shaft for coasting surface cleaning for BioWIN XL 60	0	9999999999999999
1180	047489	Front shaft for coasting surface cleaning for BioWIN XL 60	0	9999999999999999
1190	044614	Toothed washer for FireWIN, BioWIN XL 35-60, VarioWIN	0	9999999999999999
1200	009570	Rotary feeder for BioWIN XL 35-60	0	9999999999999999
1210	047314	Feed for BioWIN XL 60	0	9999999999999999
1220	051674	de: Zuluft - Blende kpl. zu BioWIN XL 450	0	9999999999999999
1240	048181	Air intake fitting for BioWIN XL 60	0	9999999999999999
1250	047907	Z-bracket for mixer for BioWIN XL 60	0	9999999999999999

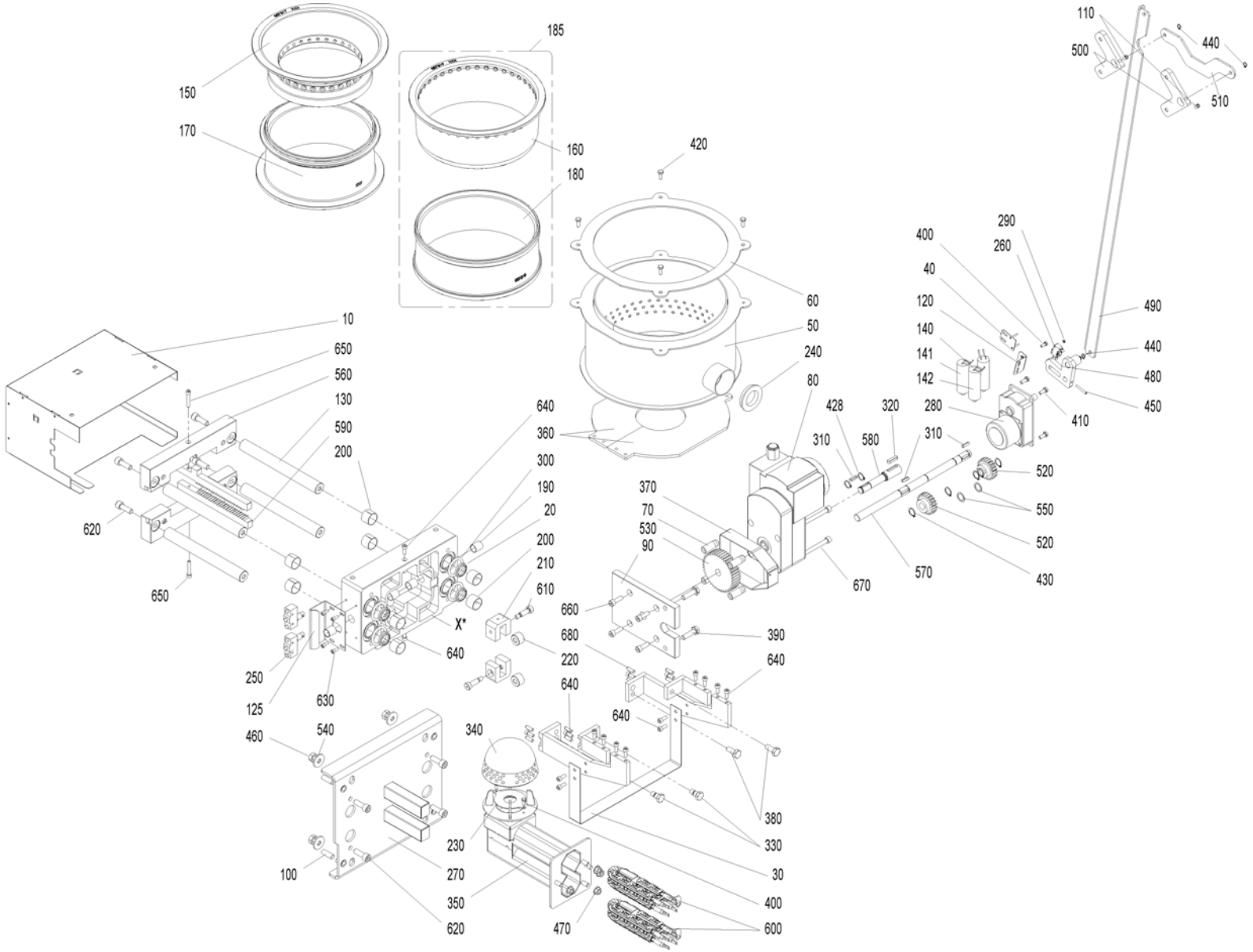
110
500
440
510
185
150
170
160
180
420
60
50
240
80
290
260
400
40
120
140
141
142
490
440
480
450
410
428
320
280
310
580
310
520
550
520
430
570
670
10
650
560
130
590
200
620
650
640
360
300
190
20
200
210
610
X*
640
250
125
630
460
540
100
370
70
530
90
660
680
220
390
640
640
640
340
380
330
30
400
600
230
270
350
620
470

Item no.	Article no.	Description	Serialnumber from	Serialnumber to
10	046713	Ash removal cover for BioWIN XL 60	0	99999999999999999
20	047960	Scraper 8 25/32/3,5/5,15 FPM for BioWIN XL 35-60F	0	99999999999999999
30	047496	Front ash agitator for BioWIN XL 60	0	99999999999999999
40	047983	Microswitch retainer for BioWIN XL 60	0	99999999999999999
50	047271	Burner for BioWIN XL 60	0	99999999999999999
60	047654	Burner seal, 3mm for BioWIN XL 60	0	99999999999999999
70	012550	Motor spacer for BioWIN XL 35-60	0	99999999999999999
80	007106	Gearmotor with connection cable, type: FGA 53 / 4DEKG 56 # for VarioWIN, FireWIN from batch 6, BioWIN XL 35-60	0	99999999999999999
90	012552	Drive flange for BioWIN XL 45-60	0	99999999999999999
100	033535	Setscrew M10x30, DIN 913 for BioWIN XL 35-60	0	99999999999999999
110	033112	Setscrew M8x10 DIN916	0	99999999999999999
120	047981	Microswitch holder for BioWIN XL 60	0	99999999999999999
125	047757	Ash removal microswitch holder for BioWIN XL 60	0	99999999999999999
130	007178	Ash removal bar for BioWIN XL 35-60	0	99999999999999999
140	007335	Capacitor for motor F48/3 0.82 µF, for 3-way changeover unit for BioWIN XL 35-60	0	99999999999999999
145	053644	Cable for ignition element BioWIN XL	0	99999999999999999
160	007319	Cone top part for BioWIN XL 45/60	0	99999999999999999
180	007318	Cone bottom part for BioWIN 40/60	0	99999999999999999
185	047992	Cone, top part for BioWIN XL 45/60 from batch 1	0	99999999999999999
190	012509	Friction bearing - bushing PAP 1620 P10 (Øi16 x Øa18 x 20)	0	99999999999999999
200	007184	Bearing 25x20, Permaglide PAP 2520 P10 for BioWIN XL 35-60	0	99999999999999999
210	007174	Rod bearing bracket for BioWIN XL 35-60	0	99999999999999999
220	007180	Rod roller for BioWIN XL 35-60	0	99999999999999999
230	047425	Primary air choke for BioWIN XL 35/45	0	99999999999999999
240	047966	Secondary air choke for BioWIN XL 35/60	0	99999999999999999
250	006936	Ash removal microswitch Z-15GQ21-B for 3-way changeover unit for PMX, BioWIN XL 35-60	0	99999999999999999
260	009277	Air control microswitch	0	99999999999999999
270	047990	Ash removal installation bracket for BioWIN XL 60	0	99999999999999999
280	046617	Gear motor with condense, for 3-way changeover unit for BioWIN XL 35-60	0	99999999999999999
290	016551	Hexagon nut M3 DIN 934	0	99999999999999999
300	012441	O-ring 34.29 x 5.33 for BioWIN XL 35-60	0	99999999999999999
310	007186	Feather key 5x5x20, DIN 6885 for BioWIN XL 35-60	0	99999999999999999
320	006766	Feather key, without tightening DIN6885 A 6x6x28 mm for PMX, BioWIN10-26, FireWIN, VarioWIN, BioWIN XL 35-60	0	99999999999999999
330	013802	Shoulder screw M10 x 12 for BioWIN XL 35-60	0	99999999999999999
340	048950	Primary air pin for BioWIN XL 35-60	0	99999999999999999
350	047281	Primary air tube for BioWIN XL 60	0	99999999999999999
360	047274	Grate plate for BioWIN XL 35-60	0	99999999999999999
370	047286	Spur gear protection for BioWIN XL 60	0	99999999999999999
380	020060	Hexagon screw M10x20 for BioWIN XL 35-60	0	99999999999999999
390	016712	Hexagon screw M10x35, DIN 933 for BioWIN XL 35-60	0	99999999999999999
400	031545	Hexagon screw M5x12 DIN 7500 (not ilustrated)	0	99999999999999999
410	031549	Hexagon screw M6x12 DIN 7500	0	99999999999999999
420	024768	Hexagon screw M6x16, DIN 993 for BioWIN XL 35-60	0	99999999999999999
430	007181	Locking ring 16x1 for BioWIN XL 35-60	0	99999999999999999
440	016165	Circlip DIN471 - 8 x 0.8 for BioWIN 10-26 (Only BioWIN Exklusiv), BioWIN XL 35-60	0	99999999999999999
450	018665	Clamping pin 4x30, DIN 1481, for 3-way changeover unit for BioWIN XL 35-60 * not illustrated	0	99999999999999999
460	016567	Hexagon nut M10 with flange and gearing (not illustrated)	0	99999999999999999
470	016553	Hexagon nut M8 with flange and gearing	0	99999999999999999
480	047665	Coasting surface cleaning rod 1 for BioWIN XL 60	0	99999999999999999
490	047468	Coasting surface cleaning rod 2 for BioWIN XL 60	0	99999999999999999
500	047666	Coasting surface cleaning rod 3 for BioWIN XL 60	0	99999999999999999

Item no.	Article no.	Description	Serialnumber from	Serialnumber to
510	047470	Coasting surface cleaning rod 4 for BioWIN XL 60	0	99999999999999999
520	007179	Ash removal spur gear Z22, M2 for BioWIN XL 35-60	0	99999999999999999
530	012551	Motor spur gear for BioWIN XL 45/60	0	99999999999999999
540	007170	U-washer M10 for BioWIN XL 60	0	99999999999999999
550	007182	Washer 16x22x1, DIN 988 for BioWIN XL 35-60	0	99999999999999999
560	007173	Ash removal connector for BioWIN XL 35-60	0	99999999999999999
570	007176	Ash removal shaft for BioWIN XL 35-60	0	99999999999999999
580	012553	Ash removal motor shaft for BioWIN XL 35-60	0	99999999999999999
590	007188	Ash removal rod for BioWIN XL 35-60	0	99999999999999999
600	055201	Ignition element BioWIN10-26, FireWIN from lot 15, VarioWIN from lot 15 BioWIN XL, LWK	0	99999999999999999
610	017048	Shoulder screw M8 10x25 ISO 7379	0	99999999999999999
620	033534	Cylinder screw M10x30, DIN 91 for BioWIN XL 35-60	0	99999999999999999
630	004625	Cylinder screw M5x12, DIN 912 for BioWIN XL 35-60	0	99999999999999999
640	033532	Cylinder screw M6x16, DIN 912 for BioWIN XL 35-60	0	99999999999999999
650	033533	Cylinder screw M6x35, DIN 912 for BioWIN XL 35-60	0	99999999999999999
660	016778	Cylinder screw M8x25, DIN 912 for BioWIN XL 35-60	0	99999999999999999
670	017049	Cylinder-head screw, hexagon socket ISO 4762 - M8x70 - 8.8 - galva. (DIN 912) for VarioWIN, FireWIN, BioWIN XL 35-60	0	99999999999999999
680	017544	Cylinder pin 6x20 for BioWIN XL 35-60	0	99999999999999999

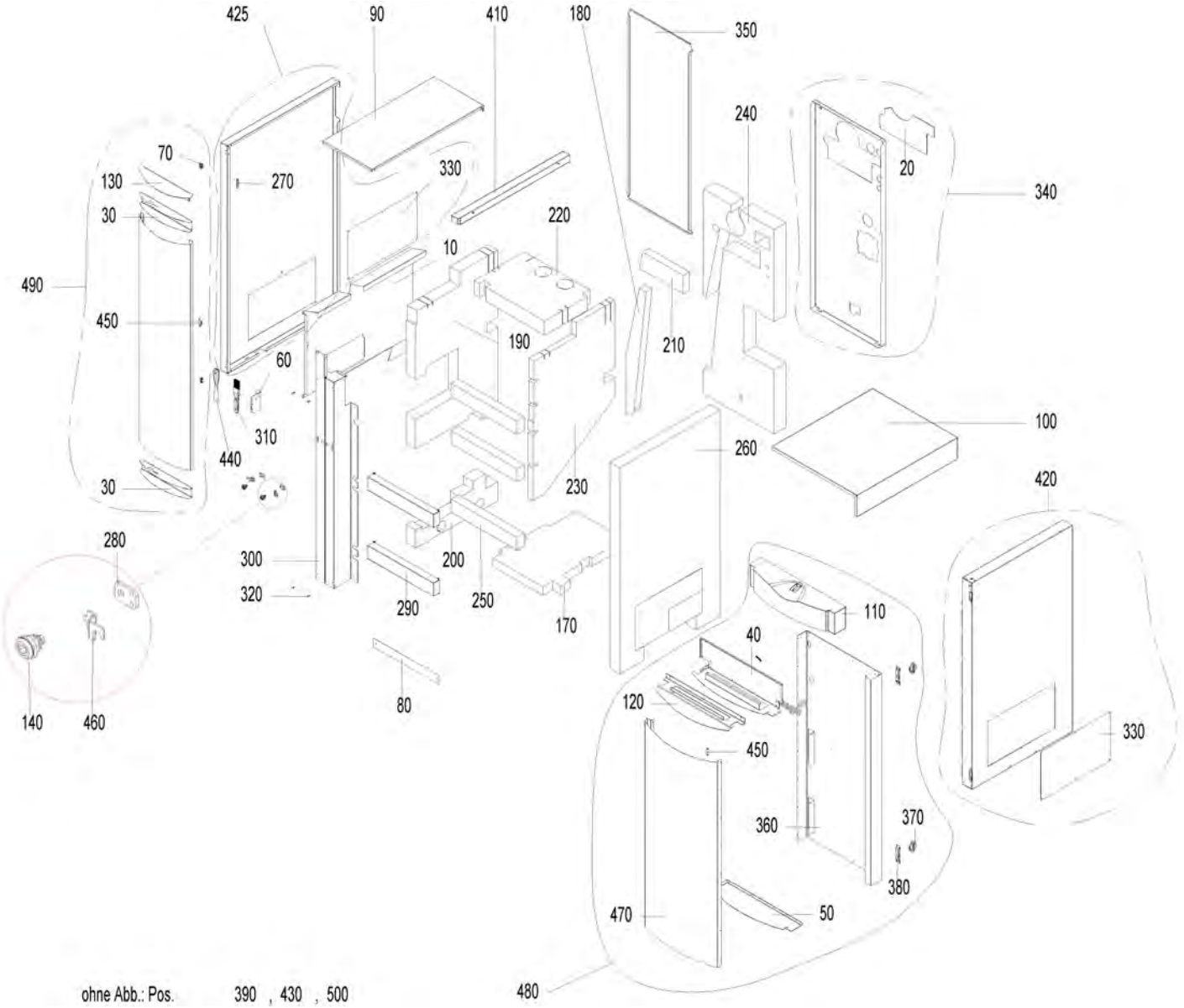
425
90
410
180
350
240
20
340
70
130
30
270
330
220
10
490
450
190
210
60
310
440
30
260
100
230
420
280
300
200
320
290
250
170
110
40
140
460
80
120
450
330
360
370
380
470
50
480
ohne Abb.: Pos. 390 , 430 , 500

Item no.	Article no.	Description	Serialnumber from	Serialnumber to
10	047567	Burner cover plate for BioWIN XL 60	0	99999999999999999
20	047551	Rear wall cover plate WioWIN 60kW	0	99999999999999999
30	047342	Door cover plate for BioWIN XL 60	0	99999999999999999
40	047331	Top door cover strip for BioWIN XL 60	0	99999999999999999
50	047330	Bottom door cover strip for BioWIN XL 60	0	99999999999999999
60	047568	Cover bracket for BioWIN XL 60	0	99999999999999999
70	044677	Bands 96-140 (hinge for left door) with fastening screw for BioWIN 10-26, BioWIN XL 35-60	0	99999999999999999
80	047559	Bottom cover for BioWIN XL 60	0	99999999999999999
90	047595	Top pellet container cover, RAL 7044 for BioWIN XL 60	0	99999999999999999
100	047592	Control panel cover, RAL 7044 for BioWIN XL 60	0	99999999999999999
110	047603	Door cover for BioWIN XL 60	0	99999999999999999
120	047588	Door liner cover for BioWIN XL 60	0	99999999999999999
130	047602	Pellet container door liner cover, RAL 7044 for BioWIN XL 60	0	99999999999999999
140	012256	Turning bolt	0	99999999999999999
170	007266	Floor insulation for BioWIN XL 60	0	99999999999999999
180	007259	Boiler insulation insert for BioWIN XL 60	0	99999999999999999
190	007264	Boiler insulation, left for BioWIN XL 60	0	99999999999999999
200	007263	Boiler insulation, bottom left for BioWIN XL 60	0	99999999999999999
210	007258	Boiler insulation, coasting surface for BioWIN XL 60	0	99999999999999999
220	007255	Boiler insulation, top for BioWIN XL 60	0	99999999999999999
230	007265	Boiler insulation, right for BioWIN XL 60	0	99999999999999999
240	007257	Boiler insulation, rear wall for BioWIN XL 60	0	99999999999999999
250	007267	Centre panel insulation for BioWIN XL 60	0	99999999999999999
260	007260	Side panel insulation for BioWIN XL 60	0	99999999999999999
270	047555	L-bracket for BioWIN XL 60	0	99999999999999999
280	047891	Driver	0	99999999999999999
290	047558	Cladding centre panel BioWIN XL 35-60	0	99999999999999999
300	047590	Cladding centre panel for BioWIN XL 60	0	99999999999999999
310	017094	WERL056 Flat brush 1 1/2" NO. 72753 for FireWIN, VarioWIN, BioWIN10-26, BioWIN XL 35-60	0	99999999999999999
320	000299	Silicone buffer	0	99999999999999999
330	047593	Inspection cover for BioWIN XL 60	0	99999999999999999
340	048187	Boiler rear wall for BioWIN XL 60	0	99999999999999999
350	047355	Left rear wall for BioWIN XL 60	0	99999999999999999
360	047569	Rear wall of panelling for BioWIN XL 60	0	99999999999999999
370	007103	Cladding door hinge for LogWIN Premium 180-505, VarioWIN, BioWIN XL 35-60	0	99999999999999999
380	047328	Hinge bracket for BioWIN XL 60	0	99999999999999999
390	031545	Hexagon screw M5x12 DIN 7500 (not ilustrated)	0	99999999999999999
410	047594	Pellet container right side panel for BioWIN XL 60	0	99999999999999999
420	048188	Right side panel for BioWIN XL 60	0	99999999999999999
425	051431	Cladding door left BioWIN 35-60	0	99999999999999999
430	031096	Countersinking screw M4x20 DIN965 gv KS (not illustrated)	0	99999999999999999
440	009540	Spatula	0	99999999999999999
450	047893	Clamping plate	0	99999999999999999
460	047892	Locking plate	0	99999999999999999
470	047571	Door liner cladding for BioWIN XL 35-60	0	99999999999999999
480	047587	Boiler panelling for BioWIN XL 60	0	99999999999999999
490	047601	Pellet container panelling for BioWIN XL 60	0	99999999999999999
500	018139	Cylinder screw 4.2x13 DIN7981SP (not illustrated)	0	99999999999999999

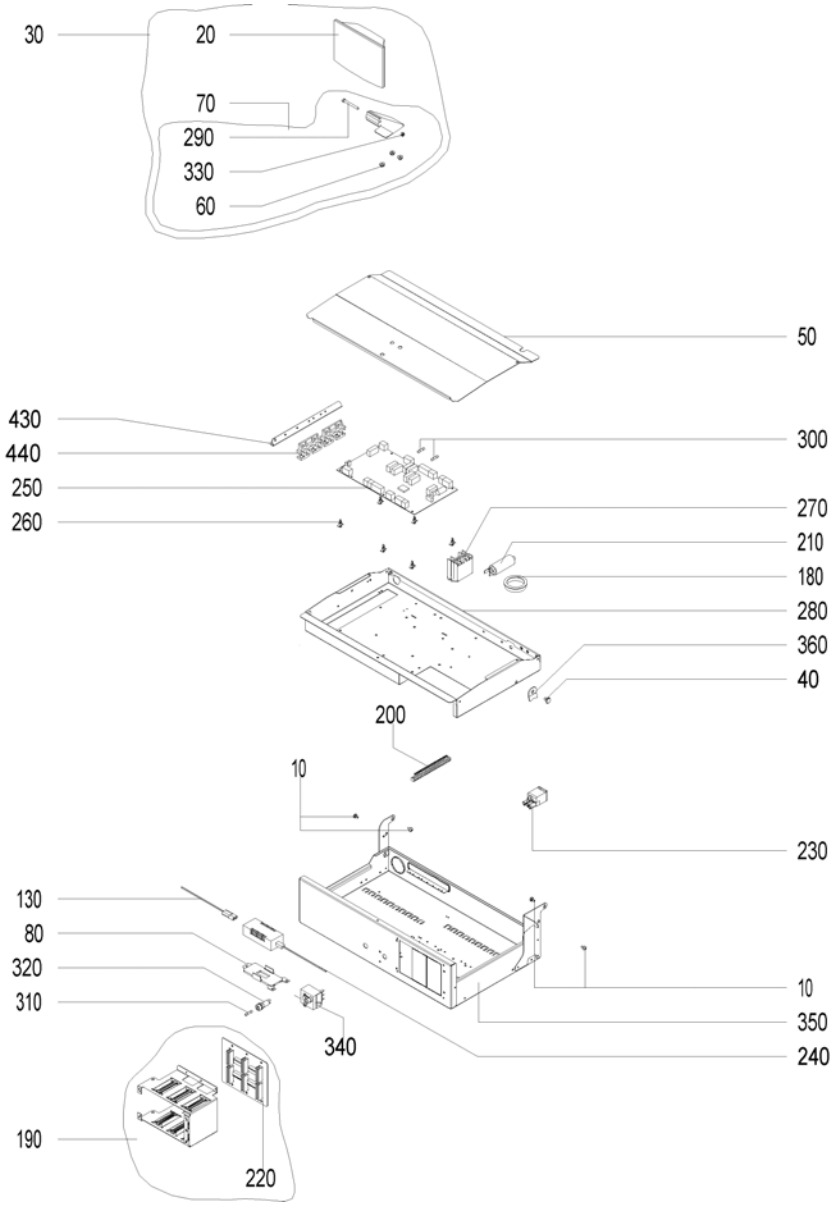
30
20
70
290
330
60
50
430
440
250
260
300
270
210
180
280
360
40
200
10
230
130
80
320
310
340
10
350
240
190
220

Item no.	Article no.	Description	Serialnumber from	Serialnumber t
10	016006	Collar screw M4 x 11.8 mm, galvanised for BioWIN 10-26,BioWIN XL 35-60	0	9999999999999
20	011985	InfoWINplus HW C4 SW V4.10 BioWIN, LWP, JetWIN, EcoWIN	0	9999999999999
30	048008	Display and operating module (InfoWIN) complete for BioWIN XL 35-60	0	9999999999999
40	033091	Bolt DIN 1445 - 8h11 x 4 x 10 - St - galvanised for VarioWIN, FireWIN, BioWIN 10-26, BioWIN XL 35-60	0	9999999999999
50	042998	Control panel cover for BioWIN 10-26, SilvaWIN, BioWIN XL 35-60	0	9999999999999
60	017001	Flanged nut M5 for BioWIN 10-26, BioWIN XL 35-60	0	9999999999999
70	046311	Housing foot InfoWIN cpl. with fastening material for LogWIN Premium 180-505,BioWIN 10-26,SWK-T,BioWIN XL 35-60	0	9999999999999
80	002050	Power supply unit 002049 holding plate for VarioWIN, FireWIN, BioWIN 10-26, BioWIN XL 35-60, LogWIN Premium 180-505	0	9999999999999
90	048285	Differential pressure watchdog cable for BioWIN XL 35-60 * not illustrated	0	9999999999999
100	048282	Coasting surface cleaning limit switch cable for BioWIN XL 35-60 *not illustrated	0	9999999999999
110	047933	Cable for microswitch grate and integral fuel hopper empty for BioWIN XL 35-60 * not illustrated	0	9999999999999
120	048284	Cable for motor heating surface cleaning and ash removal for BioWIN XL 35-60 * not illustrated	0	9999999999999
130	002051	Power supply unit cable FRIWO (primary power line) for VarioWIN, FireWIN, BioWIN 10-26, BioWIN XL 35-60, LogWIN Premium 180-505	0	9999999999999
140	047683	Cable for grate motor and ignition for BioWIN XL 35-60 * not illustrated	0	9999999999999
150	047930	Cable for auger conveyor rotation detection for BioWIN XL 35-60 * not illustrated	0	9999999999999
160	047684	Cable for auger motor for BioWIN XL 35-60 * not illustrated	0	9999999999999
170	044360	STB auger tube cable for BioWIN 10-26, BioWIN XL 35-60 * not illustrated	0	9999999999999
175	047616	Cable for door switch for BioWIN XL 35-60 * not illustrated	0	9999999999999
180	004096	Cable feed-through 2400 black Ø50	0	9999999999999
190	046130	Cable harness for MES control, new ET for BioWIN 10-26, BioWIN XL 35-60	0	9999999999999
200	009928	Terminal bar	0	9999999999999
210	007330	Condenser for motor MAB 500V, 3µF for HMX,PMX,SWK,BioWIN10-26,FireWIN,VarioWIN,BioWIN XL 35-60, EasyWIN Premium 180,LogWIN Premiu	0	9999999999999
220	046131	Module connection PCB, new ET for BioWIN10-26, BioWIN XL 35-60	0	9999999999999
230	041430	Mains connection socket 3-pin for MIRA,ETX,PMX,BioWIN10-26,LogWIN Premium 180-505,EasyWIN Premium 180,BioWIN XL 35-60, FireWIN	0	9999999999999
240	051645	Power supply unit 12V	0	9999999999999
250	011998	FMP board - B XL BioWIN XL	0	9999999999999
260	007609	PCB holder	0	9999999999999
270	005025	Power relay OMRON G7L-2A-BUB 200/240AC for PMX,BioWIN XL, BioWIN10-26,FireWIN,VarioWIN, BioWIN XL 35-60	0	9999999999999
280	043807	Control panel top part for BioWIN 10-26, SWK, BioWIN XL35-60	0	9999999999999
290	016214	Hexagon screw DIN931 M5 x 45, black for BioWIN XL 35-60	0	9999999999999
300	006900	Fuse 1 A T 5x20 ceramic tube	0	9999999999999
310	003228	6.3A fuse (not illustrated)	0	9999999999999
320	003663	Fuse holder	0	9999999999999
330	016728	Locknut M 5, DIN 985, black for BioWIN 10-26, BioWIN XL 35-60	0	9999999999999
340	005672	Thermostat LS1+100-6U	0	9999999999999
350	044223	Control panel bottom part complete, coated for BioWINT 10-26, BioWIN XL 35-60	0	9999999999999
360	043808	Locking arm for control panel for BioWIN 10-26, BioWIN XL 35-60	0	9999999999999
370	040926	Wago terminal block 11-pin orange (extra-low voltage) pre-assembled for BioWIN 10-26, BioWIN XL 35-60	0	9999999999999
380	009968	Wago terminal block 261; 13-pin orange extra-low voltage (no. 1-13), for VarioWIN, FireWIN, BioWIN 10-26, BioWIN XL 35-60 (*not il	0	9999999999999
390	006719	Wago terminal block 261 6-pce. heating requirement/probe switching for BioWIN 10-26, BioWIN XL 35-60 (*not illustrated)	0	9999999999999
400	009960	Wago terminal block 261; 8-pin 230V extnd. for VarioWIN, FireWIN, BioWIN10-26, BioWIN XL 35-60 (*not illustrated)	0	9999999999999
410	006720	Wago terminal block 261 1-9, 8-pce. Emergency door switch/probe switching for BioWIN, VarioWIN, FireWIN, BioWIN10-26, BioWIN XL 35	0	9999999999999
420	040925	Wago terminal block 8-pin blue/grey (230 V) pre-assembled for BioWIN 10-26, BioWIN XL 35-60 (*not illustrated)	0	9999999999999
430	044217	Strain relief bracket for SilvaWIN, BioWIN10-26, BioWIN XL 35-60	0	9999999999999
440	041914	Strain relief 4X, complete, assembled for ETX/SNX,PSX,GENIO/MultiWIN, SilvaWIN, BioWIN XL, BioWIN10-26, BioWIN XL 35-60	0	9999999999999

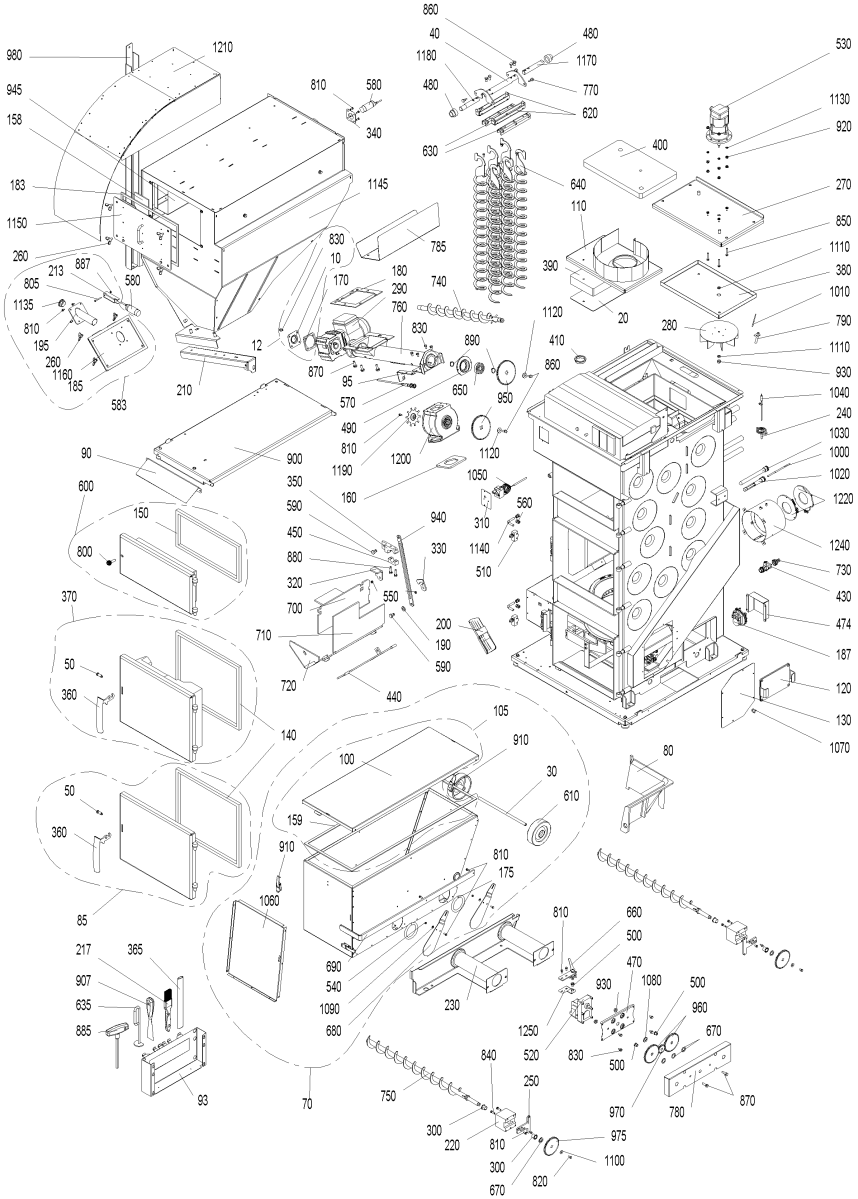
860
40
480
1180
1170
480
770
620
630
530
1130
920
400
640
270
110
850
1110
380
1010
790
1110
930
1040
240
1030
1000
1020
1220
1240
730
430
474
187
120
130
1070
980
1210
945
158
810
580
340
183
1145
1150
785
830
10
260
213
887
805
580
1135
810
195
260
1160
185
583
210
12
170
180
290
760
740
830
890
870
95
570
650
950
490
810
1190
1200
1120
1120
410
860
390
20
280
90
900
350
160
1050
560
310
1140
510
600
150
590
450
880
320
700
940
330
550
800
370
710
200
190
590
720
440
50
360
140
105
910
100
30
610
80
50
360
159
910
810
175
1060
85
217
365
907
635
885
690
540
1090
680
230
810
660
500
470
930
1080
500
960
670
1250
520
830
500
840
250
750
970
780
870
300
220
810
300
670
820
975
1100
93
70

Item no.	Article no.	Description	Serialnumber from	Serialnumber to
10	047423	Motor cover plate for BioWIN XL 35-60	0	9999999999999999
20	047156	Insulating stone cover for BioWIN XL35-60	0	9999999999999999
30	043523	Axis ash container for BioWIN 10-26 (Only BioWIN Exklusiv), BioWIN XL 35-60	0	9999999999999999
40	047063	Axle for heating surface cleaning for BioWIN XL 35-60	0	9999999999999999
50	013806	Axle for door handle for LogWIN Premium 180-505, BioWIN XL 35-60,EasyWIN Klassik/Premium 180	0	9999999999999999
60	005064	Connection pipe curved BW60	0	9999999999999999
70	047562	BIO9 Ash container, assembled for BioWIN XL 35-60	0	9999999999999999
80	007320	Ash wedge for BioWIN XL 35-60	0	9999999999999999
85	047977	Ash door complete for BioWIN XL 35-60	0	9999999999999999
90	047606	Ramp for ash box for BioWIN XL 35-60	0	9999999999999999
93	042743	Holder for cleaning equipments for VarioWIN, LogWIN Premium 180-505,SilvaWIN,BioWIN XL35-60,EasWIN Klassik/Premium 180	0	9999999999999999
95	047417	Clip for proximity switch for BioWIN XL 35-60	0	9999999999999999
100	047563	Ash container cover for BioWIN XL 35-60	0	9999999999999999
105	054404	de: Deckel inkl. Dichtung zu Aschebehälter BioWIN XL	0	9999999999999999
110	047140	Blower cover with spiral for BioWIN XL 35-60	0	9999999999999999
120	047991	Coasting surface bottom cover for BioWIN XL 35-60	0	9999999999999999
130	047409	Air intake shaft cover for BioWIN XL 35-60	0	9999999999999999
140	047037	Rope seal for heating door / ash door for BioWIN XL 35-60	0	9999999999999999
150	047043	Rope seal for cleaning door for BioWIN XL 35-60	0	9999999999999999
158	011155	Separator seal for BioWIN XL 35-60	0	9999999999999999
159	046665	Container seal	0	9999999999999999
160	047217	Downpipe seal for BioWIN XL 35-60	0	9999999999999999
170	047421	Auger motor seal for BioWIN XL 35-60	0	9999999999999999
175	051344	Seal for flange	0	9999999999999999
180	006842	Auger tube/reserve supply container seal 178x178x3mm for PMX, BioWIN 10-26, BioWIN XL35-60	0	9999999999999999
183	047993	Top maintenance cover seal for BioWIN XL 35-60	0	9999999999999999
185	047994	Bottom maintenance cover seal for BioWIN XL 35-60	0	9999999999999999
187	045404	Differential pressure watchdog	0	9999999999999999
190	047653	Baffle spacer for BioWIN XL 35-60	0	9999999999999999
200	047162	Down chute for BioWIN XL 35-60	0	9999999999999999
210	047985	Container fastening for BioWIN XL 35-60	0	9999999999999999
217	017094	WERL056 Flat brush 1 1/2" NO. 72753 for FireWIN, VarioWIN, BioWIN10-26, BioWIN XL 35-60	0	9999999999999999
220	044680	Ash removal flange, complete with bearing bushes for BioWIN 10-26 (Only BioWIN Exklusiv), BioWIN XL 35-60	0	9999999999999999
230	047548	Ash container flange for BioWIN XL 35-60	0	9999999999999999
240	043756	Combustion chamber sensor flange for BioWIN10-26, BioWIN XL 35-60	0	9999999999999999
250	047539	Ash conveyor flange plate for BioWIN XL 35-60	0	9999999999999999
260	019408	M8x16 butterfly screw, DIN 316 for BioWIN XL 35-60	0	9999999999999999
270	047989	Blower cover for BioWIN XL 35-60	0	9999999999999999
280	047354	Blower wheel Ø 180 for BioWIN XL 35-60	0	9999999999999999
290	044664	Geared motor for auger 7,8 RPM, pluggable conversion instructions for use are enclosed by PMX21/26 for BioWIN 21/26, BioWIN XL 35-	0	9999999999999999
300	012508	Friction bearing with connector	0	9999999999999999
310	047611	STL retaining plate for BioWIN XL 35-60	0	9999999999999999
320	047674	Left baffle holder for BioWIN XL 35-60	0	9999999999999999
330	047491	Right baffle holder for BioWIN XL 35-60	0	9999999999999999
340	047461	Holder for fill level switch for BioWIN XL 35-60	0	9999999999999999
350	007278	Baffle top lever for BioWIN XL 35-60	0	9999999999999999
360	048811	Boiler handle	0	9999999999999999
370	047039	Heating door, painted grey for BioWIN XL 35-60	0	9999999999999999
380	047144	Blower box insulating plate for BioWIN XL 35-60	0	9999999999999999
390	047154	Blower box insulating stone, Vermiculite 500kg/m³ for BioWIN XL 35-60	0	9999999999999999
400	047142	Blower cover insulation for BioWIN XL 35-60	0	9999999999999999

Item no.	Article no.	Description	Serialnumber from	Serialnumber to
410	004096	Cable feed-through 2400 black Ø50	0	9999999999999999
420	047997	Edge protection	0	9999999999999999
430	004385	KFE cock	0	9999999999999999
440	047660	Baffle flap for BioWIN XL 35-60	0	9999999999999999
450	007279	Baffle terminal block for BioWIN XL 35-60	0	9999999999999999
460	007328	Capacitor for motor 0.68µF for PMX from batch 11, BioWIN XL 35-60	0	9999999999999999
470	047547	Ash conveyor bracket for BioWIN XL 35-60	0	9999999999999999
474	048185	Pressure watchdog bracket for BioWIN XL 35-60	0	9999999999999999
480	047416	Heating surface cleaning bearing for BioWIN XL 35-60	0	9999999999999999
490	007086	Bearing bush, diameter 92x17mm for VarioWIN, BioWIN XL 35-60	0	9999999999999999
500	006745	Ash conveyor bearing bush	0	9999999999999999
510	007128	Microswitch Z-15GQ-B for LogWIN Premium 180-505, BioWIN XL 35-60	0	9999999999999999
520	044665	Motor	0	9999999999999999
530	044158	Blower motor with cable for blower for SilvaWIN, LogWIN, FireWIN, BioWIN XL 35-60, EasyWIN Premium 180, LogWIN Premium 180-505	0	9999999999999999
540	016586	Hexagon nut M5 DIN 934	0	9999999999999999
550	016596	Nut DIN 934 - M6 - A2 for VarioWIN, FireWIN, BioWIN10-26, BioWIN XL 35-60	0	9999999999999999
560	015992	Nut M8 DIN 934 V2 - LogWIN Klassik pellet ready	0	9999999999999999
570	006832	Proximity switch M12, inductive	0	9999999999999999
580	007821	Proximity switch EC 3025 NPAPL	0	9999999999999999
590	013810	Shoulder screw M10 x 10 for BioWIN XL 35-60	0	9999999999999999
600	047045	Cleaning door, painted grey for BioWIN XL 35-60	0	9999999999999999
610	006888	Wheel AG 125-12	0	9999999999999999
620	047064	Top cleaning profile for BioWIN XL 35-60	0	9999999999999999
630	047065	Bottom cleaning profile for BioWIN XL 35-60	0	9999999999999999
635	048123	Cleaning scraper for downpipe for BioWIN XL 35-60	0	9999999999999999
640	047059	Cleaning auger for BioWIN XL 35-60	0	9999999999999999
650	012499	Grooved ball bearing	0	9999999999999999
660	043816	Mixer, complete painted grey for BioWIN XL 35-60, BioWIN 10-26 (Only BioWIN Exklusiv)	0	9999999999999999
665	006201	Suction tube for BioWIN XL 35-60 *not shown	0	9999999999999999
670	007182	Washer 16x22x1, DIN 988 for BioWIN XL 35-60	0	9999999999999999
680	047564	Ash container slider for BioWIN XL 60	0	9999999999999999
690	047566	Ash container slider handle for BioWIN XL 60	0	9999999999999999
700	047661	Baffle 1 for BioWIN XL 60	0	9999999999999999
710	047644	Baffle 2 for BioWIN XL 60	0	9999999999999999
720	047492	Baffle shield for BioWIN XL 60	0	9999999999999999
730	004386	Hose grommet, union nut and seal for KFE ball valve for BioWIN 10-26, BioWIN XL 35-60,LogWIN Premium 180-505	0	9999999999999999
740	047349	Pellet auger for BioWIN XL 60	0	9999999999999999
750	047537	Ash conveyor auger for BioWIN XL 60	0	9999999999999999
760	047348	Pellet auger tube for BioWIN XL 60	0	9999999999999999
770	006756	Screw M6 for heating surface cleaning for PMX,BioWIN 10-26,FireWIN, BioWIN XL 35-60, LogWIN Premium 180-505	0	9999999999999999
780	047552	Ash conveyor protection plate for BioWIN XL 60	0	9999999999999999
790	041498	Protective tube for exhaust gas sensor	0	9999999999999999
800	016713	ASN0251 Hexagon screw M10x35, DIN 933 for SilvaWIN, BioWIN XL 35-60, fittings cabinet Vesto 200	0	9999999999999999
810	031545	Hexagon screw M5x12 DIN 7500 (not ilustrated)	0	9999999999999999
820	017051	Hexagon screw M6x12 DIN 933 (not illustrated)	0	9999999999999999
830	024759	Hexagon screw DIN 933 - M6x16 - 8.8 - galvanised for VarioWIN	0	9999999999999999
840	015471	Hexagon screw M6x20 DIN 933	0	9999999999999999
850	021519	Hexagon screw M6x35,DIN 933 for BioWIN XL 35-60	0	9999999999999999
860	017872	Hexagon screw M8x16, DIN 933 for BioWIN XL 35-60	0	9999999999999999
870	017191	Hexagon screw M8x25 DIN 933	0	9999999999999999
880	013801	Hexagon screw M8x30, stainless steel, DIN933 for BioWIN XL 35-60	0	9999999999999999

Item no.	Article no.	Description	Serialnumber from	Serialnumber to
885	027392	Hexagon pin key with T-handle 10x200 for VarioWIN, BioWIN XL 35-60	0	9999999999999999
890	016171	Locking ring Ø20x1.2	0	9999999999999999
900	047986	Pellet tank base for BioWIN XL 60	0	9999999999999999
907	009540	Spatula	0	9999999999999999
910	009546	Spring lock	0	9999999999999999
920	016566	Hexagon nut with flange and gearing M6	0	9999999999999999
930	016553	Hexagon nut M8 with flange and gearing	0	9999999999999999
940	047652	Baffle rod for BioWIN XL 60	0	9999999999999999
945	047959	Dust separator for integral fuel hopper for BioWIN XL 60	0	9999999999999999
950	047410	Spur gear, 67 teeth for BioWIN XL 60	0	9999999999999999
960	047544	Ash conveyor spur gear for BioWIN XL 60	0	9999999999999999
970	047543	Spur gear M2 Z20	0	9999999999999999
975	045771	Spur gear M2 Z45	0	9999999999999999
980	047304	Rear container support for BioWIN XL 60	0	9999999999999999
990	047460	Front container support for BioWIN XL 60	0	9999999999999999
1000	502186	MES009M Immersion sensor	0	9999999999999999
1010	006820	MES007 Immersion sensor (exhaust gas sensor) Pt 1000 for PMX, FireWIN, VarioWIN, BioWIN 10-26, BioWIN XL 35-60	0	9999999999999999
1020	005452	OK-915 Immersion sleeve (129 mm) No.55501.04 for EKX,OK/E,GWX,KSN,ZHN,OK-915,ETX,SNX,FKX,MIRA,FireWIN,VestoWIN Klassik 170-220,	0	9999999999999999
1030	042028	Immersion sleeve 1/2“ 180x16 mm for ETX/SNX, KSL032,NBS,NBL,FAX,ASL,FKV,KSL,ZHN,HMX,JetWin, BioWIN XL 35-60	0	9999999999999999
1040	007626	Thermocouple	0	9999999999999999
1050	005672	Thermostat LS1+100-6U	0	9999999999999999
1060	047561	Ash container partition plate for BioWIN XL 60	0	9999999999999999
1070	003208	Grommet 10x17.5x1.2	0	9999999999999999
1080	017183	U-Washer DIN 125B - M12 - galvanised for VarioWIN, FireWIN, BioWIN XL 35-60	0	9999999999999999
1090	018309	Disc 5 DIN134	0	9999999999999999
1100	031753	Disc 6 ISO 7093	0	9999999999999999
1110	024767	Washer DIN 125 - M8 - galvanised, ISO 7089 for VarioWIN, BioWIN 10-26, BioWIN XL 35-60, EasyWIN Premium 180	0	9999999999999999
1120	031755	Disc 8 ISO 7093	0	9999999999999999
1130	020397	Washer M6, DIN125, polyamide, 6.6 for BioWIN 10-26,BioWIN XL 35-60	0	9999999999999999
1140	043426	Locking bracket for heating door / ash door for SilvaWIN,LogWIN Premium 180-505, BioWIN XL 35-60, EasyWIN Klassik/Premium 180	0	9999999999999999
1145	047296	BIO6 Integral fuel hopper with base for BioWIN XL 35-60	0	9999999999999999
1150	047451	Top maintenance cover for integral fuel hopper for BioWIN XL 35-60	0	9999999999999999
1160	051338	Conversion kit proximity switch bottom for BioWIN XL35-60	0	9999999999999999
1170	047490	Rear shaft for coasting surface cleaning for BioWIN XL 60	0	9999999999999999
1180	047489	Front shaft for coasting surface cleaning for BioWIN XL 60	0	9999999999999999
1190	044614	Toothed washer for FireWIN, BioWIN XL 35-60, VarioWIN	0	9999999999999999
1200	009570	Rotary feeder for BioWIN XL 35-60	0	9999999999999999
1210	047314	Feed for BioWIN XL 60	0	9999999999999999
1220	051676	Intake air orifice - BioWIN XL 600	0	9999999999999999
1240	048181	Air intake fitting for BioWIN XL 60	0	9999999999999999
1250	047907	Z-bracket for mixer for BioWIN XL 60	0	9999999999999999

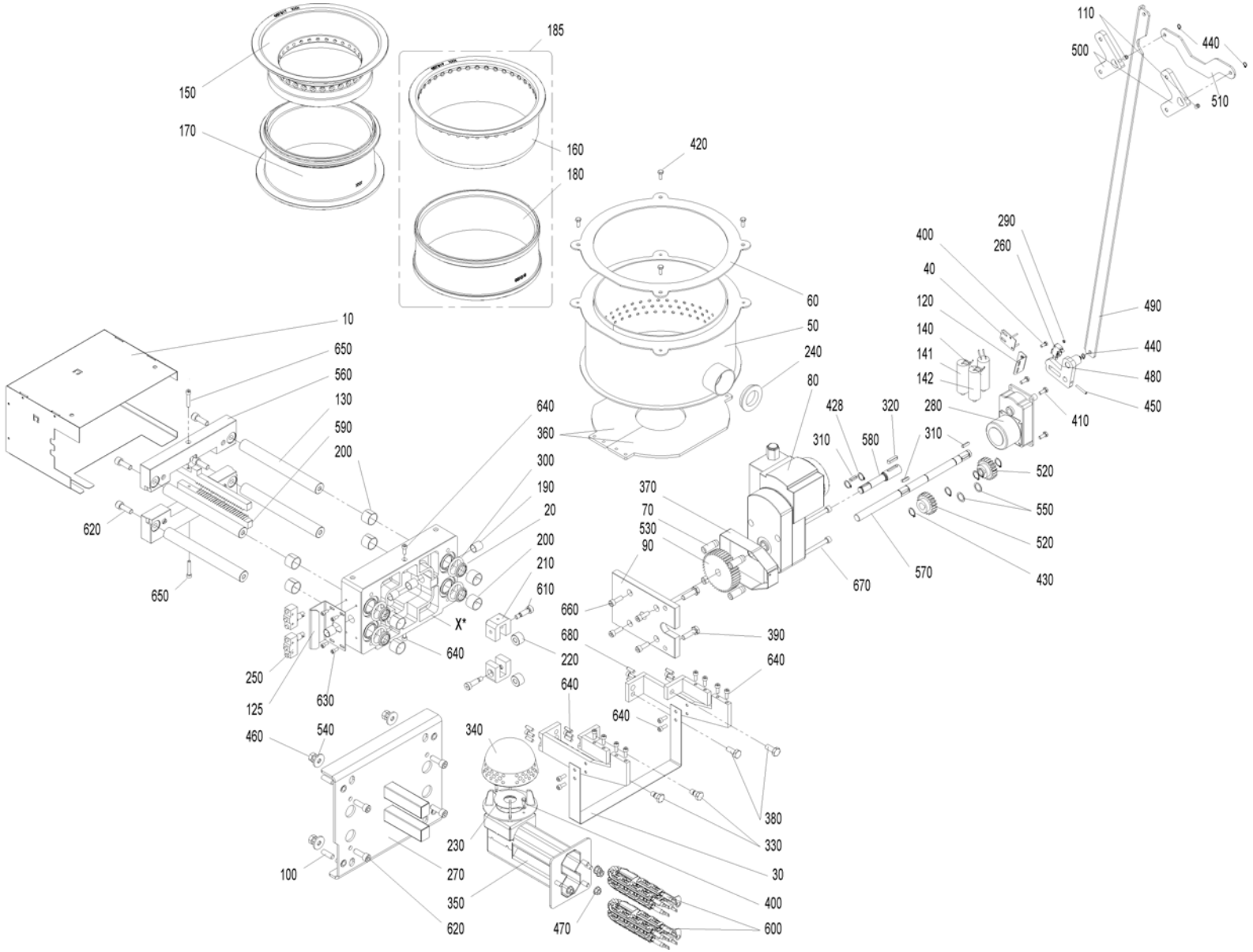
110
500
440
510
185
150
170
160
180
420
60
50
240
80
290
260
400
40
120
140
141
142
490
440
480
450
410
428
320
280
310
580
310
520
550
520
430
570
670
10
650
560
130
590
200
620
650
640
360
300
190
20
200
210
610
X*
640
250
125
630
460
540
100
370
70
530
90
660
680
220
390
640
640
640
340
380
330
30
400
600
230
270
350
620
470

Item no.	Article no.	Description	Serialnumber from	Serialnumber to
10	046713	Ash removal cover for BioWIN XL 60	0	99999999999999999
20	047960	Scraper 8 25/32/3,5/5,15 FPM for BioWIN XL 35-60F	0	99999999999999999
30	047496	Front ash agitator for BioWIN XL 60	0	99999999999999999
40	047983	Microswitch retainer for BioWIN XL 60	0	99999999999999999
50	047271	Burner for BioWIN XL 60	0	99999999999999999
60	047654	Burner seal, 3mm for BioWIN XL 60	0	99999999999999999
70	012550	Motor spacer for BioWIN XL 35-60	0	99999999999999999
80	007106	Gearmotor with connection cable, type: FGA 53 / 4DEKG 56 # for VarioWIN, FireWIN from batch 6, BioWIN XL 35-60	0	99999999999999999
90	012552	Drive flange for BioWIN XL 45-60	0	99999999999999999
100	033535	Setscrew M10x30, DIN 913 for BioWIN XL 35-60	0	99999999999999999
110	033112	Setscrew M8x10 DIN916	0	99999999999999999
120	047981	Microswitch holder for BioWIN XL 60	0	99999999999999999
125	047757	Ash removal microswitch holder for BioWIN XL 60	0	99999999999999999
130	007178	Ash removal bar for BioWIN XL 35-60	0	99999999999999999
140	007335	Capacitor for motor F48/3 0.82 µF, for 3-way changeover unit for BioWIN XL 35-60	0	99999999999999999
145	053644	Cable for ignition element BioWIN XL	0	99999999999999999
160	007319	Cone top part for BioWIN XL 45/60	0	99999999999999999
180	007318	Cone bottom part for BioWIN 40/60	0	99999999999999999
185	047992	Cone, top part for BioWIN XL 45/60 from batch 1	0	99999999999999999
190	012509	Friction bearing - bushing PAP 1620 P10 (Øi16 x Øa18 x 20)	0	99999999999999999
200	007184	Bearing 25x20, Permaglide PAP 2520 P10 for BioWIN XL 35-60	0	99999999999999999
210	007174	Rod bearing bracket for BioWIN XL 35-60	0	99999999999999999
220	007180	Rod roller for BioWIN XL 35-60	0	99999999999999999
250	006936	Ash removal microswitch Z-15GQ21-B for 3-way changeover unit for PMX, BioWIN XL 35-60	0	99999999999999999
260	009277	Air control microswitch	0	99999999999999999
270	047990	Ash removal installation bracket for BioWIN XL 60	0	99999999999999999
280	046617	Gear motor with condense, for 3-way changeover unit for BioWIN XL 35-60	0	99999999999999999
290	016551	Hexagon nut M3 DIN 934	0	99999999999999999
300	012441	O-ring 34.29 x 5.33 for BioWIN XL 35-60	0	99999999999999999
310	007186	Feather key 5x5x20, DIN 6885 for BioWIN XL 35-60	0	99999999999999999
320	006766	Feather key, without tightening DIN6885 A 6x6x28 mm for PMX, BioWIN10-26, FireWIN, VarioWIN, BioWIN XL 35-60	0	99999999999999999
330	013802	Shoulder screw M10 x 12 for BioWIN XL 35-60	0	99999999999999999
340	048950	Primary air pin for BioWIN XL 35-60	0	99999999999999999
350	047281	Primary air tube for BioWIN XL 60	0	99999999999999999
360	047274	Grate plate for BioWIN XL 35-60	0	99999999999999999
370	047286	Spur gear protection for BioWIN XL 60	0	99999999999999999
380	020060	Hexagon screw M10x20 for BioWIN XL 35-60	0	99999999999999999
390	016712	Hexagon screw M10x35, DIN 933 for BioWIN XL 35-60	0	99999999999999999
400	031545	Hexagon screw M5x12 DIN 7500 (not ilustrated)	0	99999999999999999
410	031549	Hexagon screw M6x12 DIN 7500	0	99999999999999999
420	024768	Hexagon screw M6x16, DIN 993 for BioWIN XL 35-60	0	99999999999999999
430	007181	Locking ring 16x1 for BioWIN XL 35-60	0	99999999999999999
440	016165	Circlip DIN471 - 8 x 0.8 for BioWIN 10-26 (Only BioWIN Exklusiv), BioWIN XL 35-60	0	99999999999999999
450	018665	Clamping pin 4x30, DIN 1481, for 3-way changeover unit for BioWIN XL 35-60 * not illustrated	0	99999999999999999
460	016567	Hexagon nut M10 with flange and gearing (not illustrated)	0	99999999999999999
470	016553	Hexagon nut M8 with flange and gearing	0	99999999999999999
480	047665	Coasting surface cleaning rod 1 for BioWIN XL 60	0	99999999999999999
490	047468	Coasting surface cleaning rod 2 for BioWIN XL 60	0	99999999999999999
500	047666	Coasting surface cleaning rod 3 for BioWIN XL 60	0	99999999999999999
510	047470	Coasting surface cleaning rod 4 for BioWIN XL 60	0	99999999999999999
520	007179	Ash removal spur gear Z22, M2 for BioWIN XL 35-60	0	99999999999999999

Item no.	Article no.	Description	Serialnumber from	Serialnumber to
530	012551	Motor spur gear for BioWIN XL 45/60	0	99999999999999999
540	007170	U-washer M10 for BioWIN XL 60	0	99999999999999999
550	007182	Washer 16x22x1, DIN 988 for BioWIN XL 35-60	0	99999999999999999
560	007173	Ash removal connector for BioWIN XL 35-60	0	99999999999999999
570	007176	Ash removal shaft for BioWIN XL 35-60	0	99999999999999999
580	012553	Ash removal motor shaft for BioWIN XL 35-60	0	99999999999999999
590	007188	Ash removal rod for BioWIN XL 35-60	0	99999999999999999
600	055201	Ignition element BioWIN10-26, FireWIN from lot 15, VarioWIN from lot 15 BioWIN XL, LWK	0	99999999999999999
610	017048	Shoulder screw M8 10x25 ISO 7379	0	99999999999999999
620	033534	Cylinder screw M10x30, DIN 91 for BioWIN XL 35-60	0	99999999999999999
630	004625	Cylinder screw M5x12, DIN 912 for BioWIN XL 35-60	0	99999999999999999
640	033532	Cylinder screw M6x16, DIN 912 for BioWIN XL 35-60	0	99999999999999999
650	033533	Cylinder screw M6x35, DIN 912 for BioWIN XL 35-60	0	99999999999999999
660	016778	Cylinder screw M8x25, DIN 912 for BioWIN XL 35-60	0	99999999999999999
670	017049	Cylinder-head screw, hexagon socket ISO 4762 - M8x70 - 8.8 - galva. (DIN 912) for VarioWIN, FireWIN, BioWIN XL 35-60	0	99999999999999999
680	017544	Cylinder pin 6x20 for BioWIN XL 35-60	0	99999999999999999

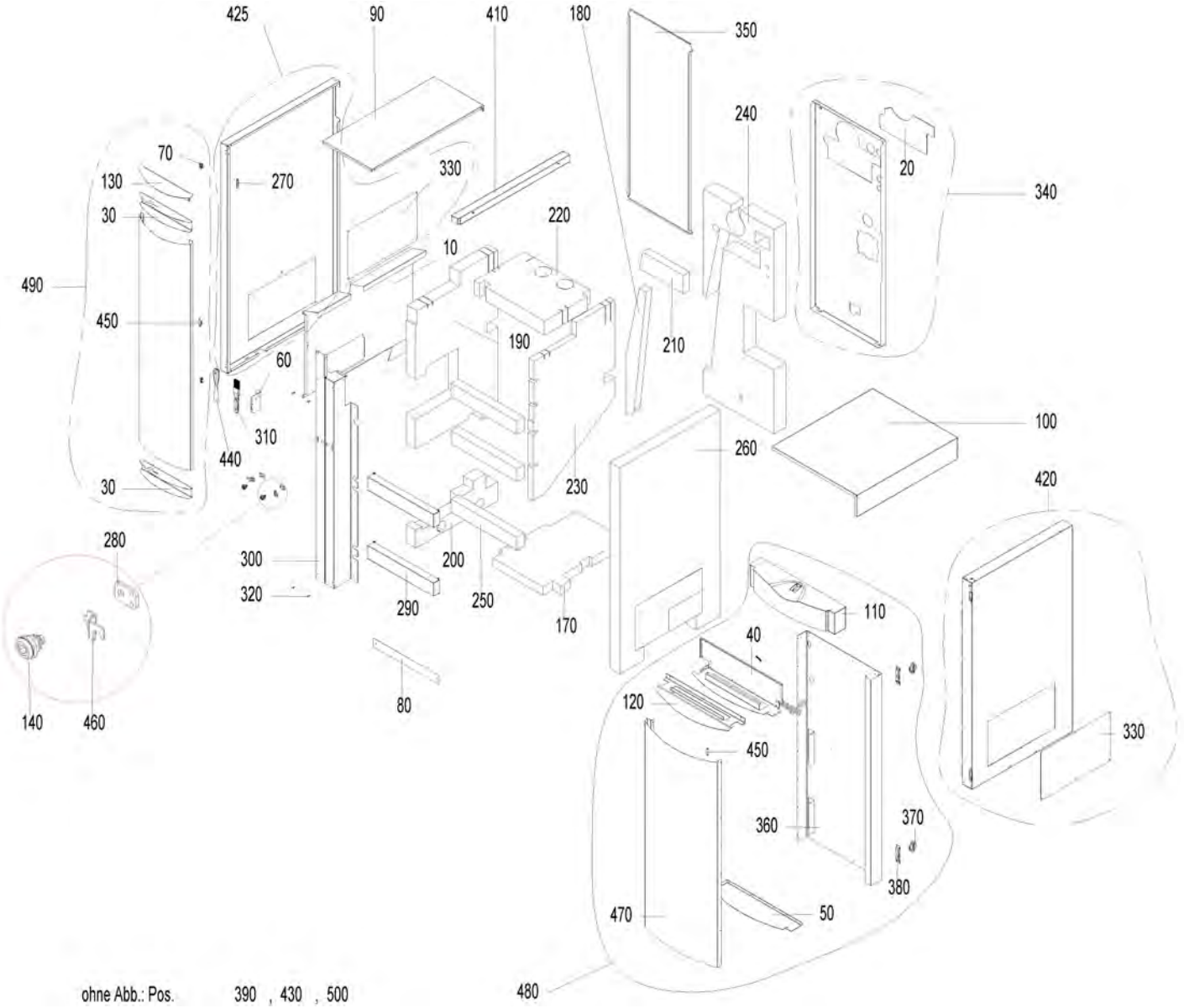
425
90
410
180
350
240
20
340
70
130
30
270
330
220
10
490
450
190
210
60
310
440
30
260
100
230
420
280
300
200
320
290
250
170
110
40
140
460
80
120
450
330
360
370
380
470
50
480
ohne Abb.: Pos. 390 , 430 , 500

Item no.	Article no.	Description	Serialnumber from	Serialnumber to
10	047567	Burner cover plate for BioWIN XL 60	0	99999999999999999
20	047551	Rear wall cover plate WioWIN 60kW	0	99999999999999999
30	047342	Door cover plate for BioWIN XL 60	0	99999999999999999
40	047331	Top door cover strip for BioWIN XL 60	0	99999999999999999
50	047330	Bottom door cover strip for BioWIN XL 60	0	99999999999999999
60	047568	Cover bracket for BioWIN XL 60	0	99999999999999999
70	044677	Bands 96-140 (hinge for left door) with fastening screw for BioWIN 10-26, BioWIN XL 35-60	0	99999999999999999
80	047559	Bottom cover for BioWIN XL 60	0	99999999999999999
90	047595	Top pellet container cover, RAL 7044 for BioWIN XL 60	0	99999999999999999
100	047592	Control panel cover, RAL 7044 for BioWIN XL 60	0	99999999999999999
110	047603	Door cover for BioWIN XL 60	0	99999999999999999
120	047588	Door liner cover for BioWIN XL 60	0	99999999999999999
130	047602	Pellet container door liner cover, RAL 7044 for BioWIN XL 60	0	99999999999999999
140	012256	Turning bolt	0	99999999999999999
170	007266	Floor insulation for BioWIN XL 60	0	99999999999999999
180	007259	Boiler insulation insert for BioWIN XL 60	0	99999999999999999
190	007264	Boiler insulation, left for BioWIN XL 60	0	99999999999999999
200	007263	Boiler insulation, bottom left for BioWIN XL 60	0	99999999999999999
210	007258	Boiler insulation, coasting surface for BioWIN XL 60	0	99999999999999999
220	007255	Boiler insulation, top for BioWIN XL 60	0	99999999999999999
230	007265	Boiler insulation, right for BioWIN XL 60	0	99999999999999999
240	007257	Boiler insulation, rear wall for BioWIN XL 60	0	99999999999999999
250	007267	Centre panel insulation for BioWIN XL 60	0	99999999999999999
260	007260	Side panel insulation for BioWIN XL 60	0	99999999999999999
270	047555	L-bracket for BioWIN XL 60	0	99999999999999999
280	047891	Driver	0	99999999999999999
290	047558	Cladding centre panel BioWIN XL 35-60	0	99999999999999999
300	047590	Cladding centre panel for BioWIN XL 60	0	99999999999999999
310	017094	WERL056 Flat brush 1 1/2" NO. 72753 for FireWIN, VarioWIN, BioWIN10-26, BioWIN XL 35-60	0	99999999999999999
320	000299	Silicone buffer	0	99999999999999999
330	047593	Inspection cover for BioWIN XL 60	0	99999999999999999
340	048187	Boiler rear wall for BioWIN XL 60	0	99999999999999999
350	047355	Left rear wall for BioWIN XL 60	0	99999999999999999
360	047569	Rear wall of panelling for BioWIN XL 60	0	99999999999999999
370	007103	Cladding door hinge for LogWIN Premium 180-505, VarioWIN, BioWIN XL 35-60	0	99999999999999999
380	047328	Hinge bracket for BioWIN XL 60	0	99999999999999999
390	031545	Hexagon screw M5x12 DIN 7500 (not ilustrated)	0	99999999999999999
410	047594	Pellet container right side panel for BioWIN XL 60	0	99999999999999999
420	048188	Right side panel for BioWIN XL 60	0	99999999999999999
425	051431	Cladding door left BioWIN 35-60	0	99999999999999999
430	031096	Countersinking screw M4x20 DIN965 gv KS (not illustrated)	0	99999999999999999
440	009540	Spatula	0	99999999999999999
450	047893	Clamping plate	0	99999999999999999
460	047892	Locking plate	0	99999999999999999
470	047571	Door liner cladding for BioWIN XL 35-60	0	99999999999999999
480	047587	Boiler panelling for BioWIN XL 60	0	99999999999999999
490	047601	Pellet container panelling for BioWIN XL 60	0	99999999999999999
500	018139	Cylinder screw 4.2x13 DIN7981SP (not illustrated)	0	99999999999999999

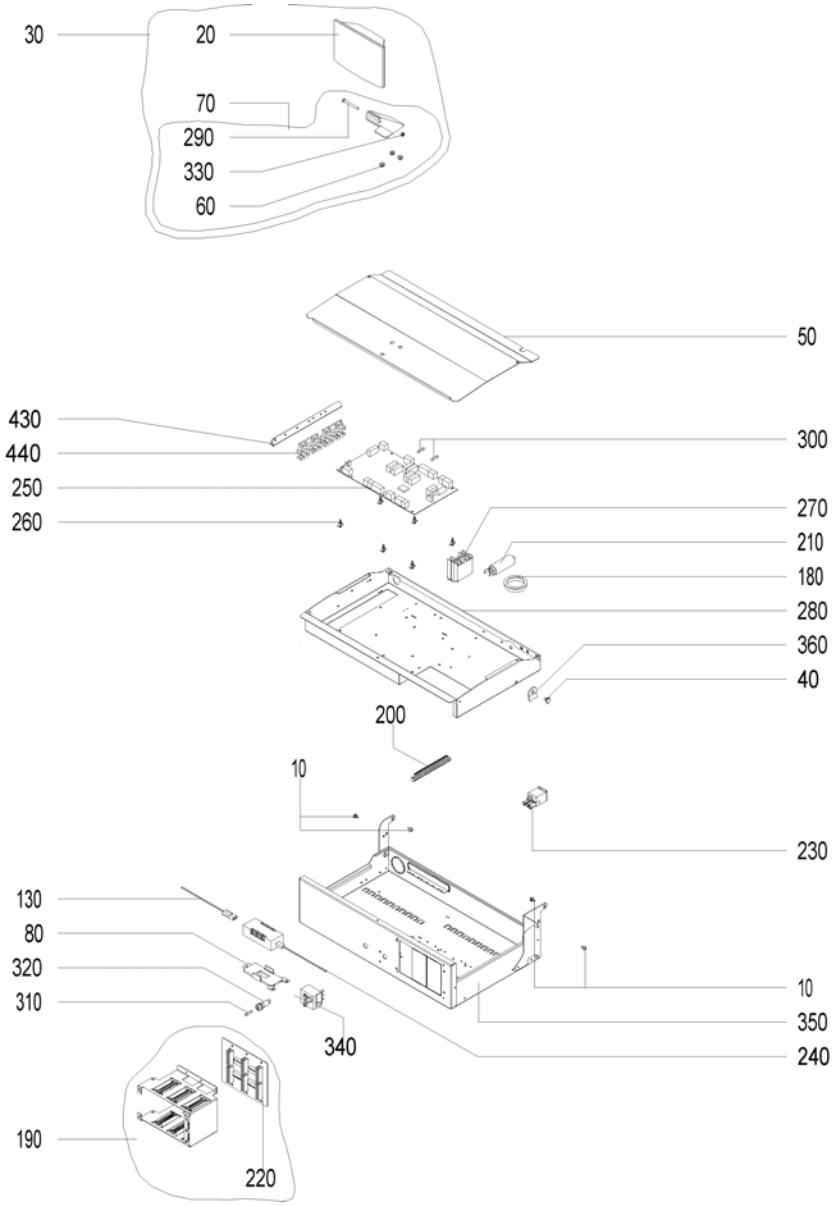
30
20
70
290
330
60
50
430
440
250
260
300
270
210
180
280
360
40
200
10
230
130
80
320
310
340
10
350
240
190
220

Item no.	Article no.	Description	Serialnumber from	Serialnumber t
10	016006	Collar screw M4 x 11.8 mm, galvanised for BioWIN 10-26,BioWIN XL 35-60	0	9999999999999
20	011985	InfoWINplus HW C4 SW V4.10 BioWIN, LWP, JetWIN, EcoWIN	0	9999999999999
30	048008	Display and operating module (InfoWIN) complete for BioWIN XL 35-60	0	9999999999999
40	033091	Bolt DIN 1445 - 8h11 x 4 x 10 - St - galvanised for VarioWIN, FireWIN, BioWIN 10-26, BioWIN XL 35-60	0	9999999999999
50	042998	Control panel cover for BioWIN 10-26, SilvaWIN, BioWIN XL 35-60	0	9999999999999
60	017001	Flanged nut M5 for BioWIN 10-26, BioWIN XL 35-60	0	9999999999999
70	046311	Housing foot InfoWIN cpl. with fastening material for LogWIN Premium 180-505,BioWIN 10-26,SWK-T,BioWIN XL 35-60	0	9999999999999
80	002050	Power supply unit 002049 holding plate for VarioWIN, FireWIN, BioWIN 10-26, BioWIN XL 35-60, LogWIN Premium 180-505	0	9999999999999
90	048285	Differential pressure watchdog cable for BioWIN XL 35-60 * not illustrated	0	9999999999999
100	048282	Coasting surface cleaning limit switch cable for BioWIN XL 35-60 *not illustrated	0	9999999999999
110	047933	Cable for microswitch grate and integral fuel hopper empty for BioWIN XL 35-60 * not illustrated	0	9999999999999
120	048284	Cable for motor heating surface cleaning and ash removal for BioWIN XL 35-60 * not illustrated	0	9999999999999
130	002051	Power supply unit cable FRIWO (primary power line) for VarioWIN, FireWIN, BioWIN 10-26, BioWIN XL 35-60, LogWIN Premium 180-505	0	9999999999999
140	047683	Cable for grate motor and ignition for BioWIN XL 35-60 * not illustrated	0	9999999999999
150	047930	Cable for auger conveyor rotation detection for BioWIN XL 35-60 * not illustrated	0	9999999999999
160	047684	Cable for auger motor for BioWIN XL 35-60 * not illustrated	0	9999999999999
170	044360	STB auger tube cable for BioWIN 10-26, BioWIN XL 35-60 * not illustrated	0	9999999999999
175	047616	Cable for door switch for BioWIN XL 35-60 * not illustrated	0	9999999999999
180	004096	Cable feed-through 2400 black Ø50	0	9999999999999
190	046130	Cable harness for MES control, new ET for BioWIN 10-26, BioWIN XL 35-60	0	9999999999999
200	009928	Terminal bar	0	9999999999999
210	007330	Condenser for motor MAB 500V, 3µF for HMX,PMX,SWK,BioWIN10-26,FireWIN,VarioWIN,BioWIN XL 35-60, EasyWIN Premium 180,LogWIN Premiu	0	9999999999999
220	046131	Module connection PCB, new ET for BioWIN10-26, BioWIN XL 35-60	0	9999999999999
230	041430	Mains connection socket 3-pin for MIRA,ETX,PMX,BioWIN10-26,LogWIN Premium 180-505,EasyWIN Premium 180,BioWIN XL 35-60, FireWIN	0	9999999999999
240	051645	Power supply unit 12V	0	9999999999999
250	011998	FMP board - B XL BioWIN XL	0	9999999999999
260	007609	PCB holder	0	9999999999999
270	005025	Power relay OMRON G7L-2A-BUB 200/240AC for PMX,BioWIN XL, BioWIN10-26,FireWIN,VarioWIN, BioWIN XL 35-60	0	9999999999999
280	043807	Control panel top part for BioWIN 10-26, SWK, BioWIN XL35-60	0	9999999999999
290	016214	Hexagon screw DIN931 M5 x 45, black for BioWIN XL 35-60	0	9999999999999
300	006900	Fuse 1 A T 5x20 ceramic tube	0	9999999999999
310	003228	6.3A fuse (not illustrated)	0	9999999999999
320	003663	Fuse holder	0	9999999999999
330	016728	Locknut M 5, DIN 985, black for BioWIN 10-26, BioWIN XL 35-60	0	9999999999999
340	005672	Thermostat LS1+100-6U	0	9999999999999
350	044223	Control panel bottom part complete, coated for BioWINT 10-26, BioWIN XL 35-60	0	9999999999999
360	043808	Locking arm for control panel for BioWIN 10-26, BioWIN XL 35-60	0	9999999999999
370	040926	Wago terminal block 11-pin orange (extra-low voltage) pre-assembled for BioWIN 10-26, BioWIN XL 35-60	0	9999999999999
380	009968	Wago terminal block 261; 13-pin orange extra-low voltage (no. 1-13), for VarioWIN, FireWIN, BioWIN 10-26, BioWIN XL 35-60 (*not il	0	9999999999999
390	006719	Wago terminal block 261 6-pce. heating requirement/probe switching for BioWIN 10-26, BioWIN XL 35-60 (*not illustrated)	0	9999999999999
400	009960	Wago terminal block 261; 8-pin 230V extnd. for VarioWIN, FireWIN, BioWIN10-26, BioWIN XL 35-60 (*not illustrated)	0	9999999999999
410	006720	Wago terminal block 261 1-9, 8-pce. Emergency door switch/probe switching for BioWIN, VarioWIN, FireWIN, BioWIN10-26, BioWIN XL 35	0	9999999999999
420	040925	Wago terminal block 8-pin blue/grey (230 V) pre-assembled for BioWIN 10-26, BioWIN XL 35-60 (*not illustrated)	0	9999999999999
430	044217	Strain relief bracket for SilvaWIN, BioWIN10-26, BioWIN XL 35-60	0	9999999999999
440	041914	Strain relief 4X, complete, assembled for ETX/SNX,PSX,GENIO/MultiWIN, SilvaWIN, BioWIN XL, BioWIN10-26, BioWIN XL 35-60	0	9999999999999

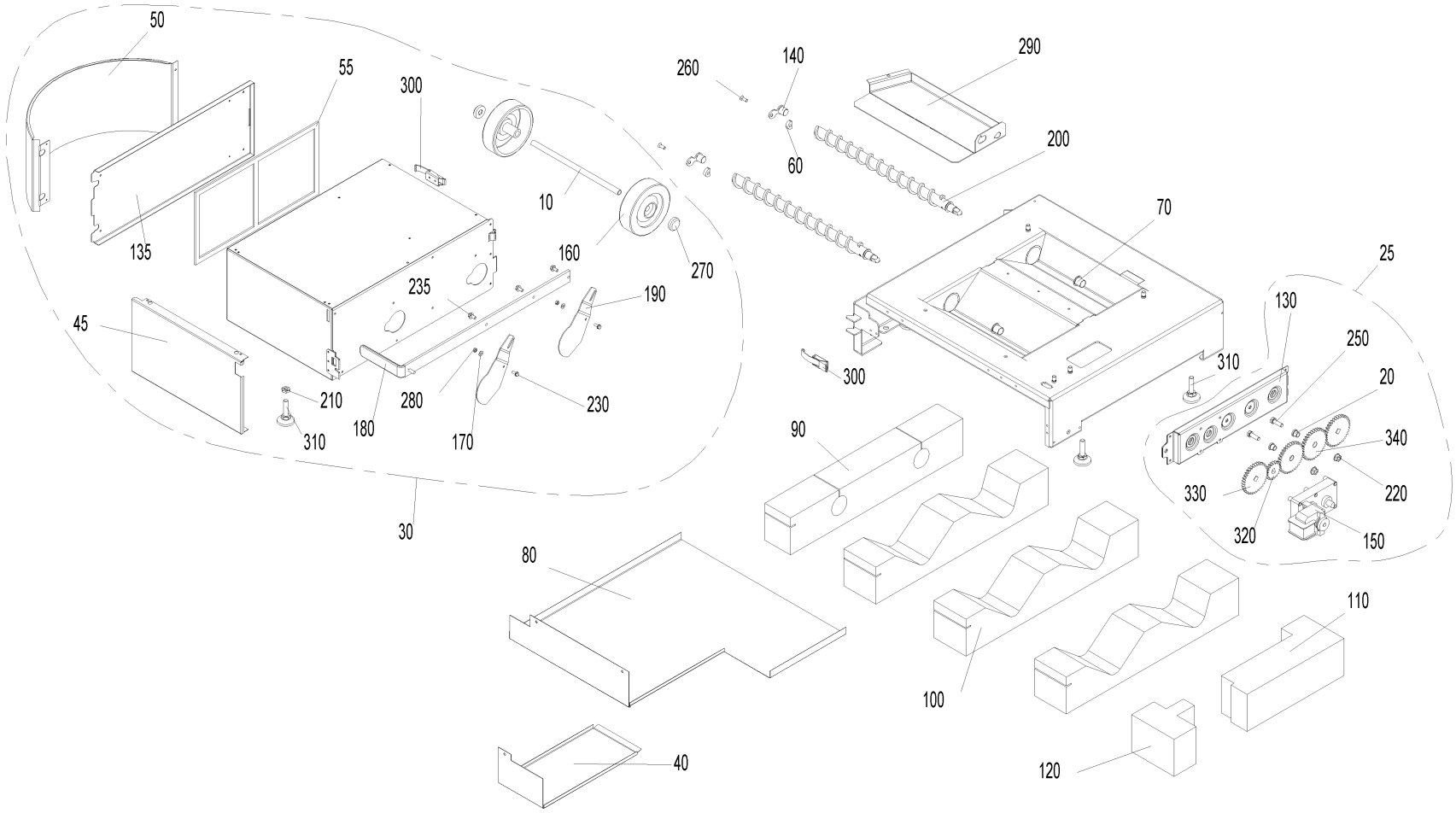
50
55
300
135
10
160
270
235
190
45
210
310
180
280
170
230
30
260
140
290
60
200
70
300
310
25
130
250
20
340
330
220
320
150
90
80
100
110
40
120

Item no.	Article no.	Description	Serialnumber from	Serialnumber to
10	051379	Ash box axle	0	99999999999999999
20	006745	Ash conveyor bearing bush	0	99999999999999999
25	054418	Ash removal, completely pre- mounted, BioWIN2	0	99999999999999999
30	051262	BIO90 Ash box, cpl	0	99999999999999999
40	051125	Cover for ash conveyor motor	0	99999999999999999
45	051633	Ash box lid	0	99999999999999999
50	051637	Ash box lid curve	0	99999999999999999
55	046665	Container seal	0	99999999999999999
60	048573	Distance	0	99999999999999999
70	012508	Friction bearing with connector	0	99999999999999999
80	051124	Cup insulation	0	99999999999999999
90	051126	Ash pipe insulation	0	99999999999999999
100	051127	Ash chamfer insulation	0	99999999999999999
110	051128	Motor insulation, rear	0	99999999999999999
120	051129	Motor insulation, front	0	99999999999999999
130	048572	Ash conveyor bracket	0	99999999999999999
135	051635	Ash box flap	0	99999999999999999
140	051120	Auger bearing	0	99999999999999999
150	044665	Motor	0	99999999999999999
160	006888	Wheel AG 125-12	0	99999999999999999
170	018309	Disc 5 DIN134	0	99999999999999999
180	051389	Ash box scraper	0	99999999999999999
190	050686	Sliding plate	0	99999999999999999
200	051542	Auger	0	99999999999999999
210	031156	Hexagon nut M10 DIN 439	0	99999999999999999
220	016553	Hexagon nut M8 with flange and gearing	0	99999999999999999
230	031545	Hexagon screw M5x12 DIN 7500 (not ilustrated)	0	99999999999999999
235	031549	Hexagon screw M6x12 DIN 7500	0	99999999999999999
240	017086	Hexagon screw M8x20 DIN 933 (not illustrated)	0	99999999999999999
250	017191	Hexagon screw M8x25 DIN 933	0	99999999999999999
260	016863	Countersinking screw M6x16	0	99999999999999999
270	006889	Washer Ø12	0	99999999999999999
280	016727	Lock nut M5	0	99999999999999999
290	050692	Ash box base	0	99999999999999999
300	009546	Spring lock	0	99999999999999999
310	009990	Leg M10 x 40	0	99999999999999999
320	047543	Spur gear M2 Z20	0	99999999999999999
330	050869	Spur gear M2 Z36	0	99999999999999999
340	048566	Spur gear M2 Z36 Ø12	0	99999999999999999

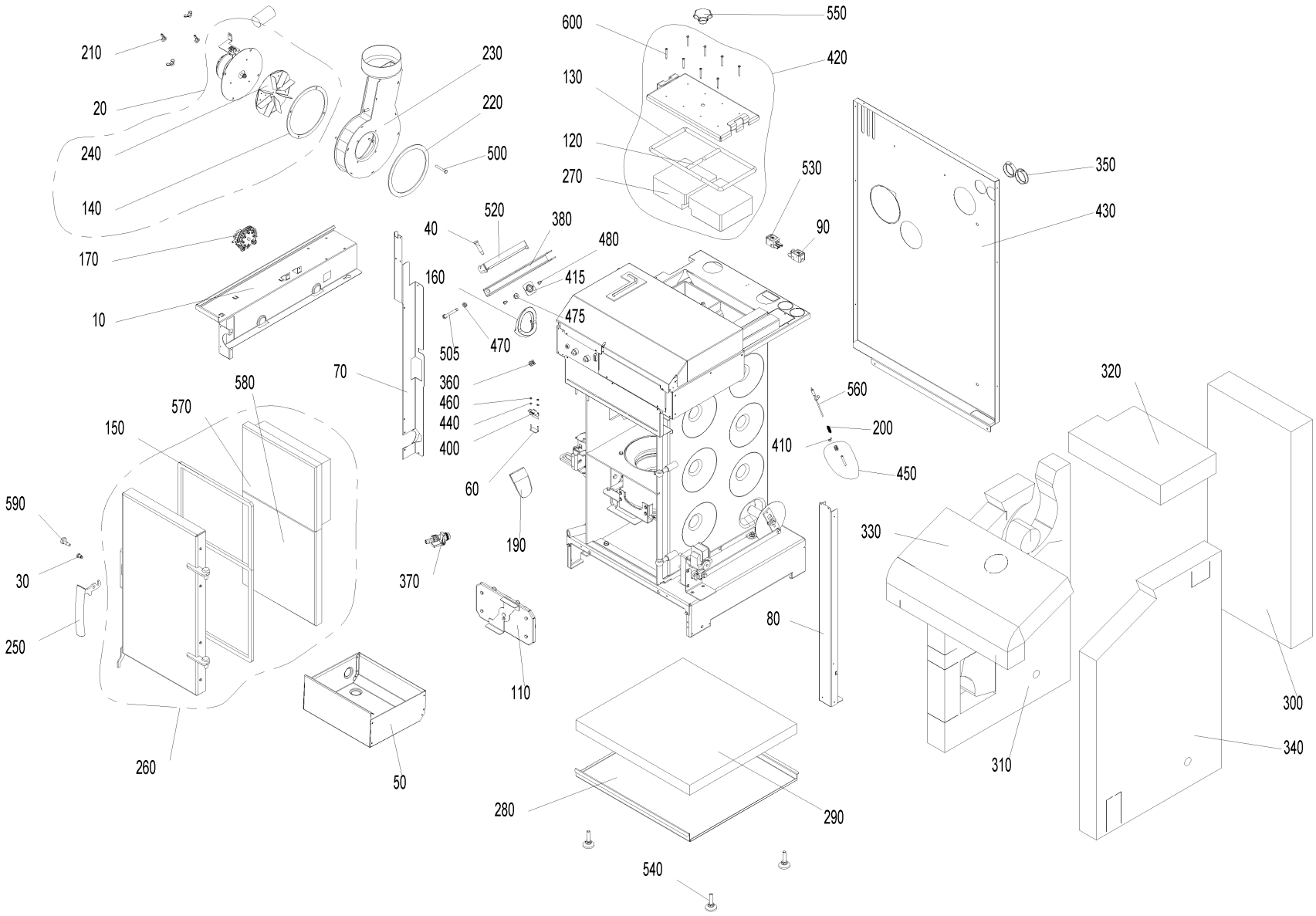
210
20
240
140
170
10
230
220
500
520
40
380
480
160
415
475
505
470
70
360
460
440
400
60
190
370
580
570
150
590
30
250
260
50
110
600
550
420
130
120
270
530
90
350
430
560
200
410
450
320
330
80
310
300
340
280
290
540

Item no.	Article no.	Description	Serialnumber from	Serialnumber to
10	050918	Cover plate	0	99999999999999999
20	053010	Flue gas blower	0	99999999999999999
30	048881	Axle for door handle CK45	0	99999999999999999
40	013813	Collar screw	0	99999999999999999
50	048928	Ash pan	0	99999999999999999
60	051045	Fastened microswitch, complete	0	99999999999999999
70	051109	Cover, left	0	99999999999999999
80	048609	Cover, right	0	99999999999999999
90	070324	Socket, 3-pin, black	0	99999999999999999
110	051056	Coasting surface cover, complete	0	99999999999999999
120	051040	Sealing cord, short	0	99999999999999999
120	051041	Sealing cord, short	0	99999999999999999
130	051017	Sealing cord for cleaning cover	0	99999999999999999
130	051034	Sealing cord for cleaning cover	0	99999999999999999
140	051006	Blower box seal	0	99999999999999999
150	048916	Heating door seal	0	99999999999999999
160	048926	Auger tube seal	0	99999999999999999
170	045404	Differential pressure watchdog	0	99999999999999999
190	048921	Down chute	0	99999999999999999
200	050647	Combustion chamber sensor spring	0	99999999999999999
210	019410	Wing nut M6	0	99999999999999999
220	051005	Blower seal	0	99999999999999999
230	053234	Blower box for BioWIN102-262	0	99999999999999999
240	052951	Blower wheel Ø160 x 25 for BioWIN2 102 - 262	0	99999999999999999
250	007480	Boiler handle	0	99999999999999999
260	051545	Heating door cpl. mounted	0	99999999999999999
270	050636	Insulating stone for cleaning cover	0	99999999999999999
270	051007	Insulating stone for cleaning cover	0	99999999999999999
280	048863	Cup insulation 10-26 K BW2	0	99999999999999999
290	048864	Floor insulation	0	99999999999999999
300	051116	Rear insulation	0	99999999999999999
310	051119	Left insulation	0	99999999999999999
320	048910	Coasting surface insulation	0	99999999999999999
330	048911	Top insulation	0	99999999999999999
340	050924	Right insulation	0	99999999999999999
350	004096	Cable feed-through 2400 black Ø50	0	99999999999999999
360	051112	Cage nut M8	0	99999999999999999
370	004385	KFE cock	0	99999999999999999
380	048611	Pellet container clamp	0	99999999999999999
400	007632	Microswitch with lever	0	99999999999999999
410	031274	Eyelet M6	0	99999999999999999
415	052484	Platelet flanged nut	0	99999999999999999
420	048870	Cleaning cover, complete	0	99999999999999999
420	050477	Cleaning cover, complete	0	99999999999999999
430	050916	Rear wall	0	99999999999999999
440	021474	Disc 3 DIN134	0	99999999999999999
450	051069	Protective tube for combustion chamber sensor, complete	0	99999999999999999
460	016551	Hexagon nut M3 DIN 934	0	99999999999999999
470	015992	Nut M8 DIN 934 V2 - LogWIN Klassik pellet ready	0	99999999999999999
475	016553	Hexagon nut M8 with flange and gearing	0	99999999999999999
480	031545	Hexagon screw M5x12 DIN 7500 (not ilustrated)	0	99999999999999999

Item no.	Article no.	Description	Serialnumber from	Serialnumber to
500	021504	Hexagon screw M6x45 DIN933	0	99999999999999999
505	016461	Hexagon screw M8x80 DIN 933	0	99999999999999999
520	048975	Clamping rail	0	99999999999999999
530	070323	Plug, 3-pin, black	0	99999999999999999
540	009990	Leg M10 x 40	0	99999999999999999
550	005125	Star handle M12 x 35	0	99999999999999999
560	007626	Thermocouple	0	99999999999999999
570	048914	Door stone	0	99999999999999999
580	050447	Bottom door stone	0	99999999999999999
590	051004	Locking pin	0	99999999999999999
600	016719	Cylinder drilling screw 4.2 x 38 DIN7504	0	99999999999999999

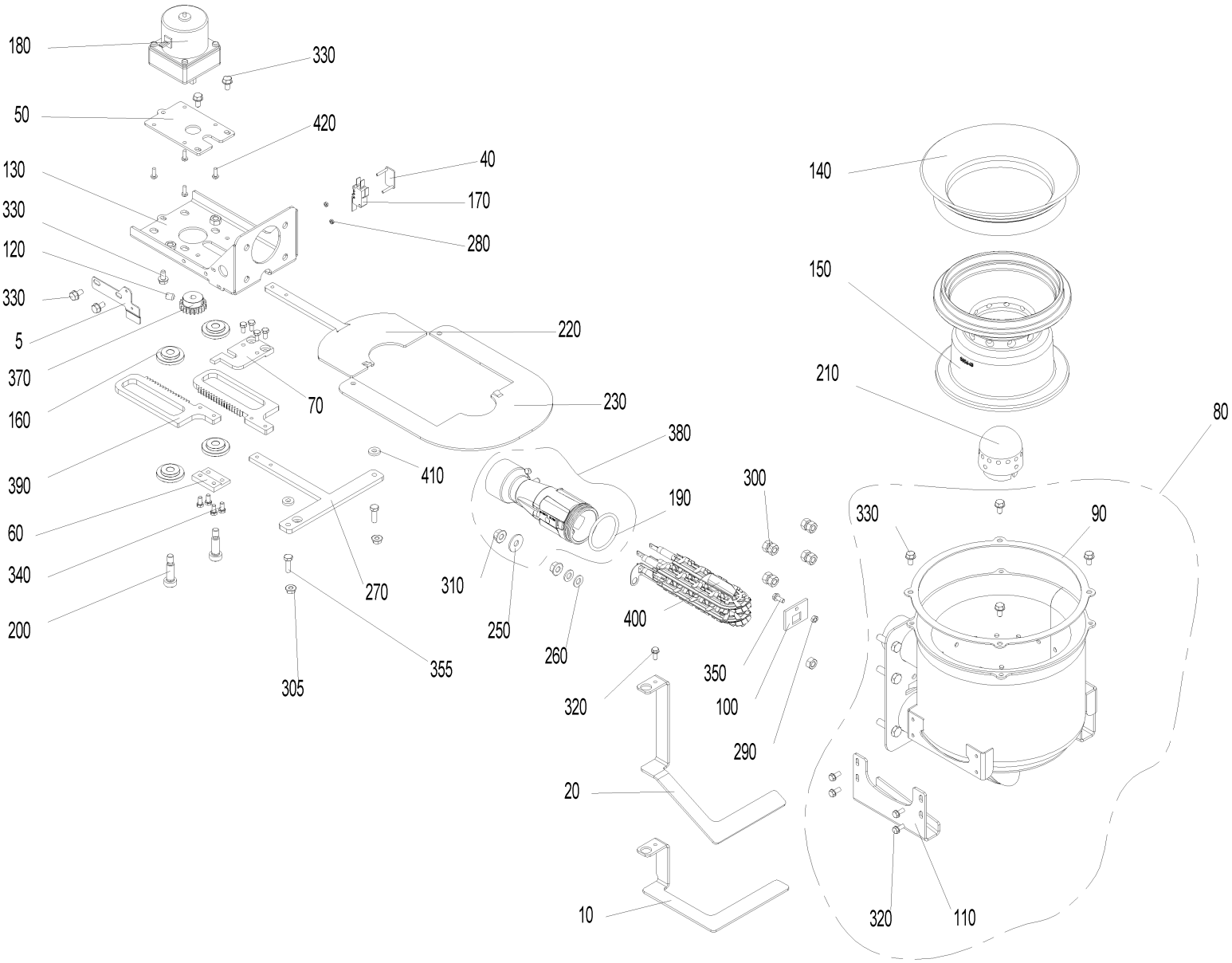
180
330
50
420
130
40
170
330
280
120
330
5
220
370
70
230
160
380
390
410
300
190
60
340
270
310
250
400
200
260
350
305
355
320
100
290
20
10
140
150
210
80
330
90
320
110

Item no.	Article no.	Description	Serialnumber from	Serialnumber to
5	053544	Stop plate	0	99999999999999999
10	051048	Ash stop plate, Klassik, Premium	0	99999999999999999
20	051046	Microswitch fastening	0	99999999999999999
40	051045	Fastened microswitch, complete	0	99999999999999999
50	050632	Bracket mounting plate	0	99999999999999999
60	050649	Mounting plate	0	99999999999999999
70	051042	Mounting plate, top	0	99999999999999999
80	051065	Burner	0	99999999999999999
90	048861	Burner seal	0	99999999999999999
100	048841	Driving rod feed-through	0	99999999999999999
110	048842	Grate plate guide	0	99999999999999999
120	033112	Setscrew M8x10 DIN916	0	99999999999999999
125	053643	Cable - ignition element for BW1, BW2, FireWIN and VarioWIN	0	99999999999999999
130	050639	Shake-out bracket	0	99999999999999999
140	050642	Cone, top part 45°	0	99999999999999999
150	050643	Cone, bottom part	0	99999999999999999
160	007125	Bearing for vibrating drive	0	99999999999999999
170	007632	Microswitch with lever	0	99999999999999999
180	012561	Shake-out motor	0	99999999999999999
190	006849	O-ring FPM70 45 x 4	0	99999999999999999
200	017048	Shoulder screw M8 10x25 ISO 7379	0	99999999999999999
210	007210	Primary air pin	0	99999999999999999
220	051051	Grate plate, left	0	99999999999999999
230	053539	Grate plate, right	0	99999999999999999
250	031755	Disc 8 ISO 7093	0	99999999999999999
260	024779	Disc 8 ISO 7089	0	99999999999999999
270	051023	Grate plate scraper	0	99999999999999999
280	016551	Hexagon nut M3 DIN 934	0	99999999999999999
290	017035	Hexagon nut M5 DIN 934	0	99999999999999999
300	031153	Hexagon nut M8 DIN 934	0	99999999999999999
305	016566	Hexagon nut with flange and gearing M6	0	99999999999999999
310	016553	Hexagon nut M8 with flange and gearing	0	99999999999999999
320	031545	Hexagon screw M5x12 DIN 7500 (not ilustrated)	0	99999999999999999
330	031549	Hexagon screw M6x12 DIN 7500	0	99999999999999999
340	016756	Hexagon screw M5x10 DIN 933	0	99999999999999999
355	015471	Hexagon screw M6x20 DIN 933	0	99999999999999999
370	007222	Spur gear M1,5; Z21	0	99999999999999999
380	051066	Venturi nozzle	0	99999999999999999
390	048161	Steering rack BioWin2 10-26	0	99999999999999999
400	055201	Ignition element BioWIN10-26, FireWIN from lot 15, VarioWIN from lot 15 BioWIN XL, LWK	0	99999999999999999
402	053851	de: Zündelement inkl. Kabel beigelegt.	0	99999999999999999
410	051054	Intermediate plate	0	99999999999999999
420	016780	Cylinder screw M4x12 DIN 7985	0	99999999999999999

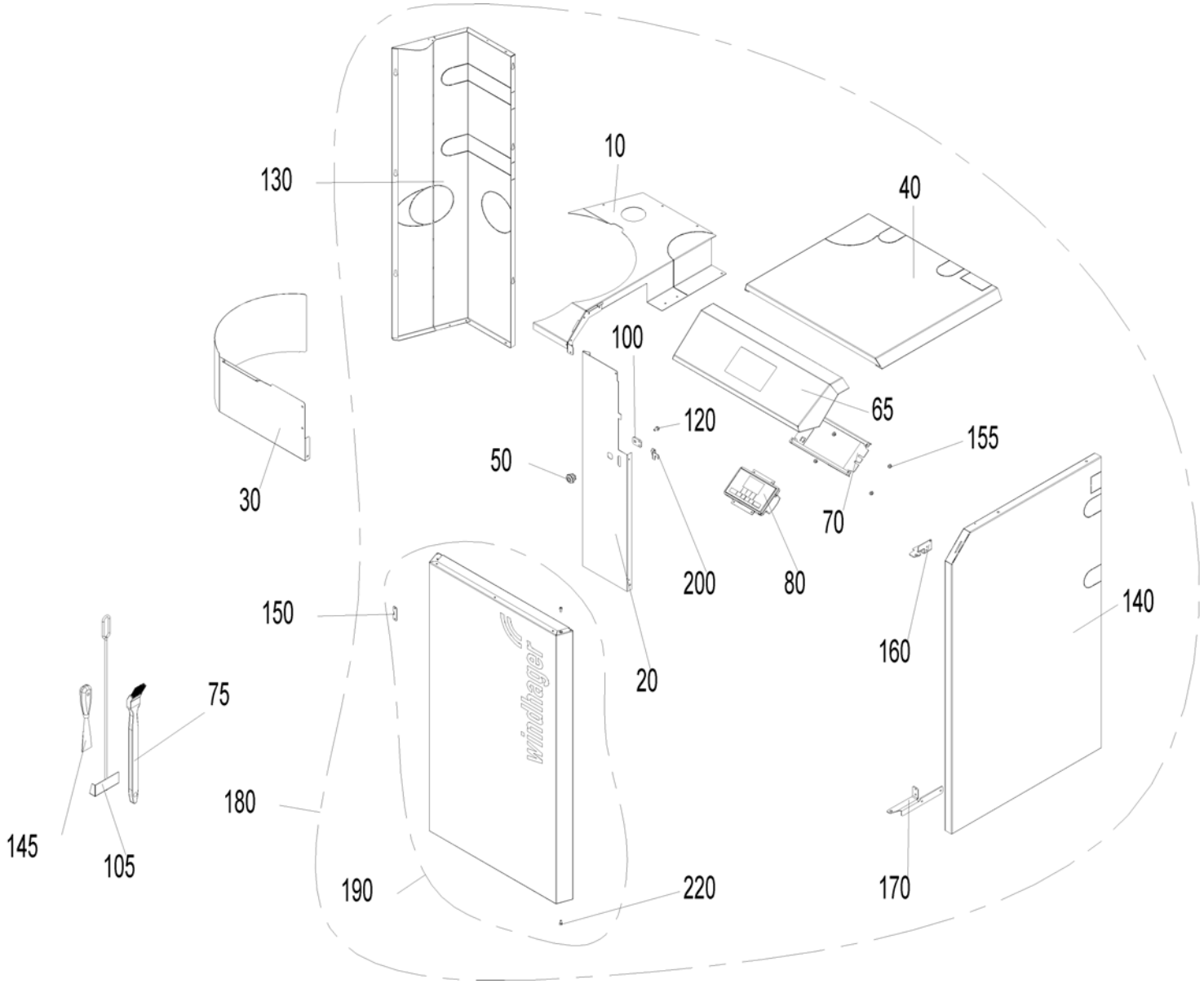
130
10
40
100
65
120
155
50
30
70
200
80
150
140
160
20
75
180
145
105
190
220
170

Item no.	Article no.	Description	Serialnumber from	Serialnumber to
10	051605	Cover, rear left	0	99999999999999999
10	051606	Cover, rear left	0	99999999999999999
20	050876	Cover, left	0	99999999999999999
30	050371	BIO87 Pellet container cover	0	99999999999999999
40	050875	Coasting surface cover	0	99999999999999999
40	050940	Coasting surface cover	0	99999999999999999
50	012256	Turning bolt	0	99999999999999999
65	053001	Front operation InfoWIN	0	99999999999999999
70	051787	InfoWIN holder	0	99999999999999999
75	017090	Cleaning brush	0	99999999999999999
80	009879	InfoWIN plus F4 LWK, BioWIN2	0	99999999999999999
100	047891	Driver	0	99999999999999999
105	072192	Scratcher	0	99999999999999999
110	031545	Hexagon screw M5x12 DIN 7500 (not ilustrated)	0	99999999999999999
120	031549	Hexagon screw M6x12 DIN 7500	0	99999999999999999
130	050878	Left side panel	0	99999999999999999
130	050958	Left side panel	0	99999999999999999
140	050874	Right side panel	0	99999999999999999
140	050932	Right side panel	0	99999999999999999
145	009540	Spatula	0	99999999999999999
150	047893	Clamping plate	0	99999999999999999
155	016565	Hexagon nut M5 with flange and gearing (not illustrated)	0	99999999999999999
160	048988	Door mounting, top	0	99999999999999999
170	048987	Door mounting, bottom	0	99999999999999999
180	050907	BIO88 Cladding complete	0	99999999999999999
180	050908	BIO89 Cladding complete	0	99999999999999999
190	051608	Cladding door	0	99999999999999999
200	047892	Locking plate	0	99999999999999999
210	018139	Cylinder screw 4.2x13 DIN7981SP (not illustrated)	0	99999999999999999
220	004237	Cylinder screw M5x10 ISO 4762 (not illustrated)	0	99999999999999999

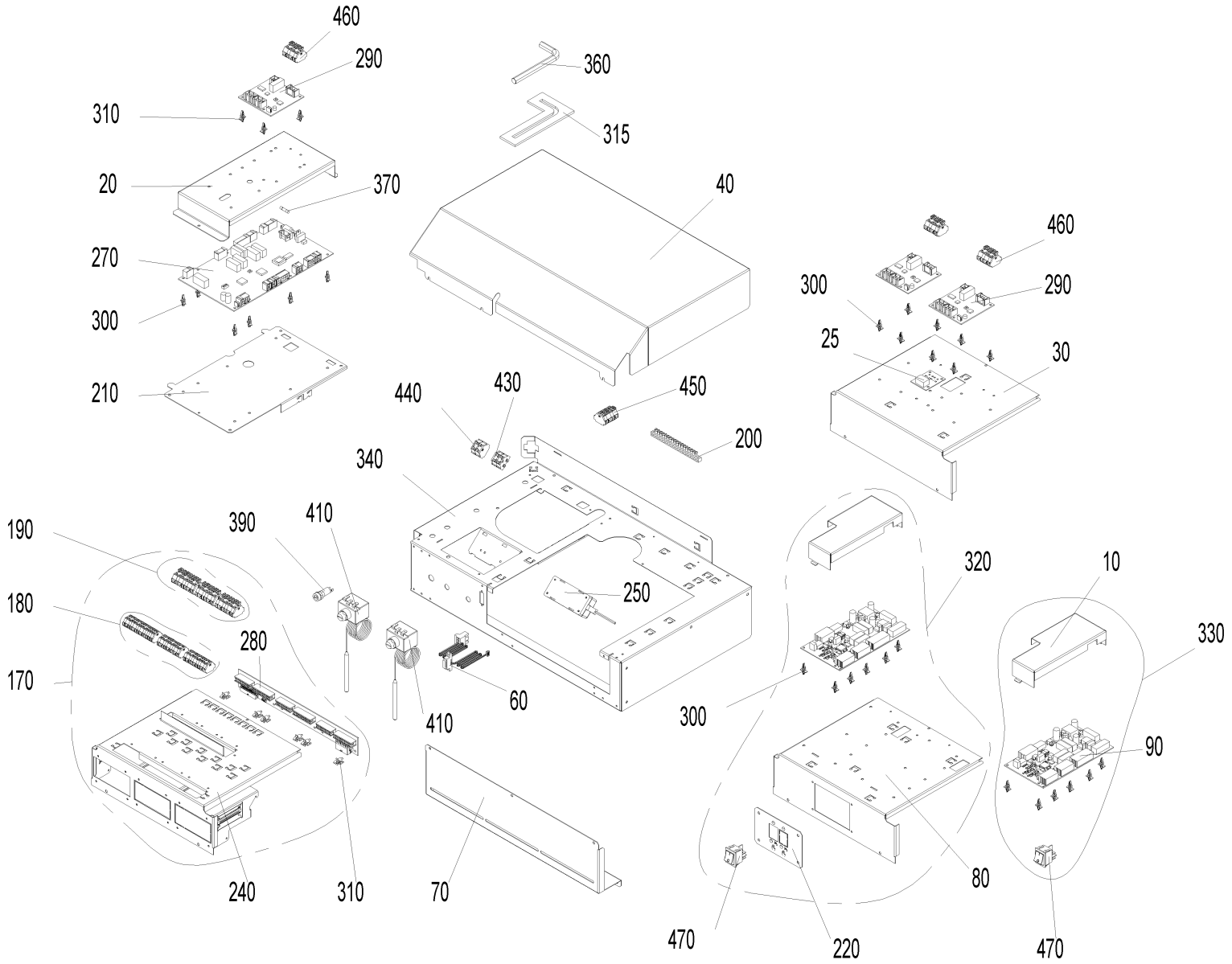
460
290
310
20
370
270
300
210
360
315
40
460
300
290
25
30
440
430
450
200
340
250
190
180
170
390
410
280
60
410
240
310
70
320
10
330
300
90
80
470
220
470

Item no.	Article no.	Description	Serialnumber from	Serialnumber to
10	048750	BUML TTL 2Z cover	0	99999999999999999
20	048955	PCB cover	0	99999999999999999
25	012012	LON connection diagram	0	99999999999999999
30	051382	REG000BW2 External control system cover	0	99999999999999999
40	048618	Control panel cover	0	99999999999999999
60	050970	Ribbon cable, Lon	0	99999999999999999
70	048902	Retaining plate	0	99999999999999999
80	048613	Retaining bracket, REG	0	99999999999999999
90	009767	BUML TTL 2Z interface	0	99999999999999999
100	002059	Power supply cable (not illustrated)	0	99999999999999999
110	050971	Power supply cable OT (not illustrated)	0	99999999999999999
120	043586	Draught fan cable (not illustrated)	0	99999999999999999
130	003719	TTL cable (not illustrated)	0	99999999999999999
140	040333	Wiring harness 12 V (not illustrated)	0	99999999999999999
150	040335	Wiring harness 230 V (not illustrated)	0	99999999999999999
160	040334	Wiring harness AAT HFR (not illustrated)	0	99999999999999999
170	050910	MESBW2 Cable harness	0	99999999999999999
180	051415	Cable harness MES extra-low voltage 12 V	0	99999999999999999
190	051414	Cable harness MES low voltage 230 V	0	99999999999999999
200	009928	Terminal bar	0	99999999999999999
210	050959	Bracket fireing automat	0	99999999999999999
220	048952	Rocker switch bracket	0	99999999999999999
230	018190	Oval-head screw 3.2x16 (not illustrated)	0	99999999999999999
240	051390	Module guide complete	0	99999999999999999
250	051645	Power supply unit 12V	0	99999999999999999
260	005784	Pin connector (not illustrated)	0	99999999999999999
270	011990	PCB, FMP BW2	0	99999999999999999
280	050996	MES PCB	0	99999999999999999
290	011994	PCB board, FMO-J	0	99999999999999999
300	007609	PCB holder	0	99999999999999999
310	007549	PCB holder, Richco	0	99999999999999999
315	051766	Position hexagon pin screwdriver	0	99999999999999999
320	050912	REG 021	0	99999999999999999
330	050913	REG 024	0	99999999999999999
340	048605	Control panel, floor	0	99999999999999999
360	027391	Hexagon pin screwdriver 10 mm DIN 911	0	99999999999999999
370	006900	Fuse 1 A T 5x20 ceramic tube	0	99999999999999999
380	003228	6.3A fuse (not illustrated)	0	99999999999999999
390	003663	Fuse holder	0	99999999999999999
400	007629	Immersion sensor PT 1000 (not illustrated)	0	99999999999999999
405	502186	MES009M Immersion sensor	0	99999999999999999
410	005672	Thermostat LS1+100-6U	0	99999999999999999
415	003208	Grommet 10x17.5x1.2	0	99999999999999999
430	006833	Wago terminal block 261; 4-pin "12V GND"	0	99999999999999999
440	006834	Wago terminal block 261; 4-pin "safety 1-4"	0	99999999999999999
450	007656	Wago terminal block 261; 6-pin	0	99999999999999999
460	010047	Wago terminal block 261; 6-pin extra PCB	0	99999999999999999
470	005563	Rocker switch SW/GR 0-1	0	99999999999999999
480	018140	Cylinder screw 4.2x13 DIN7981ST (not illustrated)	0	99999999999999999

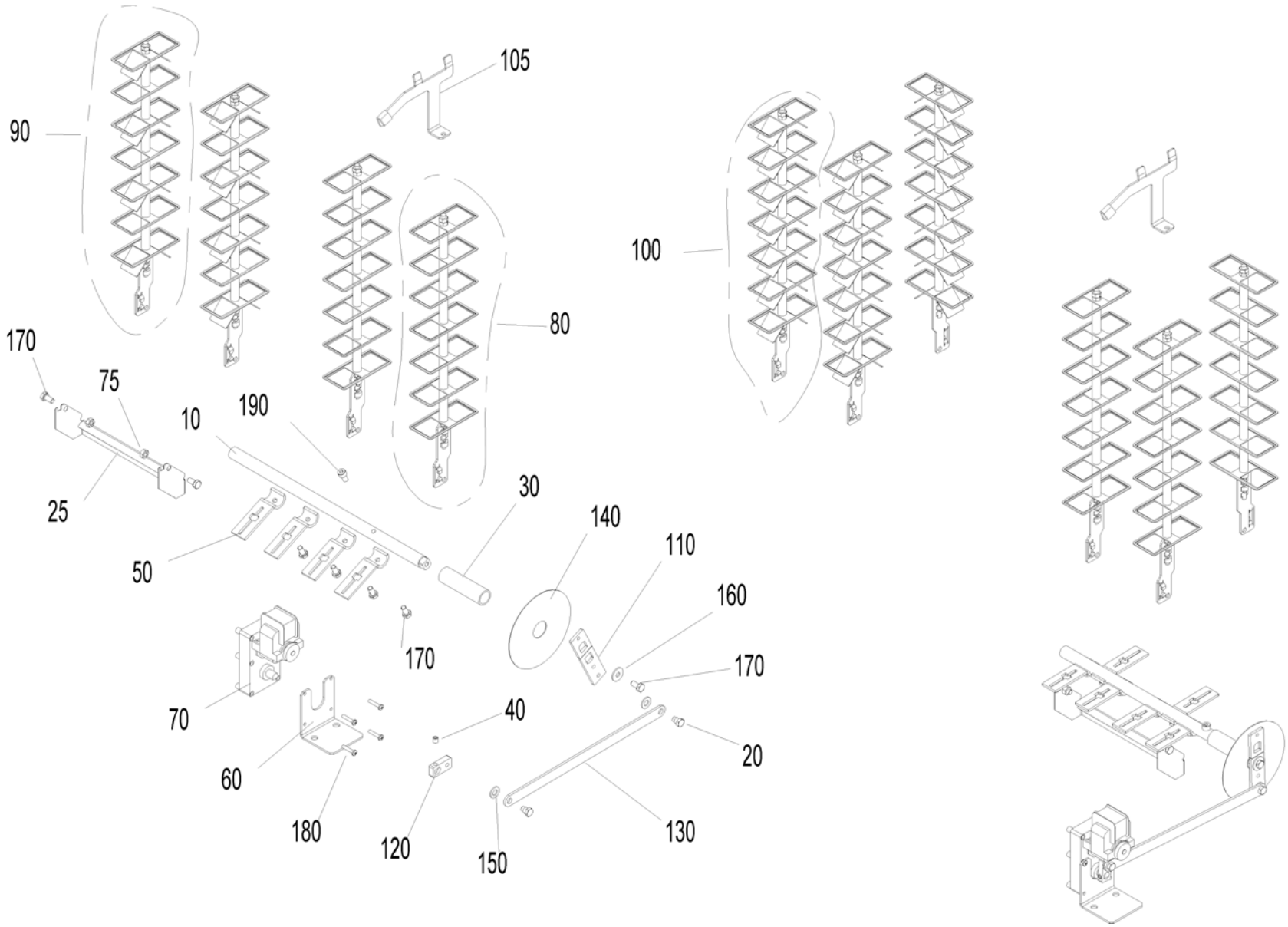
90
105
80
100
170
75
10
190
25
50
30
140
110
160
170
170
70
40
20
60
180
120
150
130

Item no.	Article no.	Description	Serialnumber from	Serialnumber to
10	048882	Axle heating surface BW2 10-26	0	99999999999999999
20	012502	Collar screw	0	99999999999999999
25	051624	Ash sheet	0	99999999999999999
30	048980	Distance rod	0	99999999999999999
40	033112	Setscrew M8x10 DIN916	0	99999999999999999
50	051547	Lever for cleaning heating surfaces	0	99999999999999999
60	051121	L-bracket, motor HFR	0	99999999999999999
70	044665	Motor	0	99999999999999999
75	015992	Nut M8 DIN 934 V2 - LogWIN Klassik pellet ready	0	99999999999999999
80	051609	Clearer flat	0	99999999999999999
90	051610	Clearer flat with turbulator	0	99999999999999999
100	051611	Clearer flat with turbulator	0	99999999999999999
105	051076	Cleaning plate for combustion chamber	0	99999999999999999
110	048884	Shaker lever 1	0	99999999999999999
120	048885	Shaker lever 2	0	99999999999999999
130	051367	Shaker lever 3	0	99999999999999999
140	051122	Disc	0	99999999999999999
150	024780	Disc 10 ISO7089	0	99999999999999999
160	031755	Disc 8 ISO 7093	0	99999999999999999
170	016721	Hexagon screw M8x16 DIN 933	0	99999999999999999
180	016837	Cylinder screw M5x25 ISO 7045	0	99999999999999999
190	016773	Cylinder screw M8x16 ISO 4762	0	99999999999999999

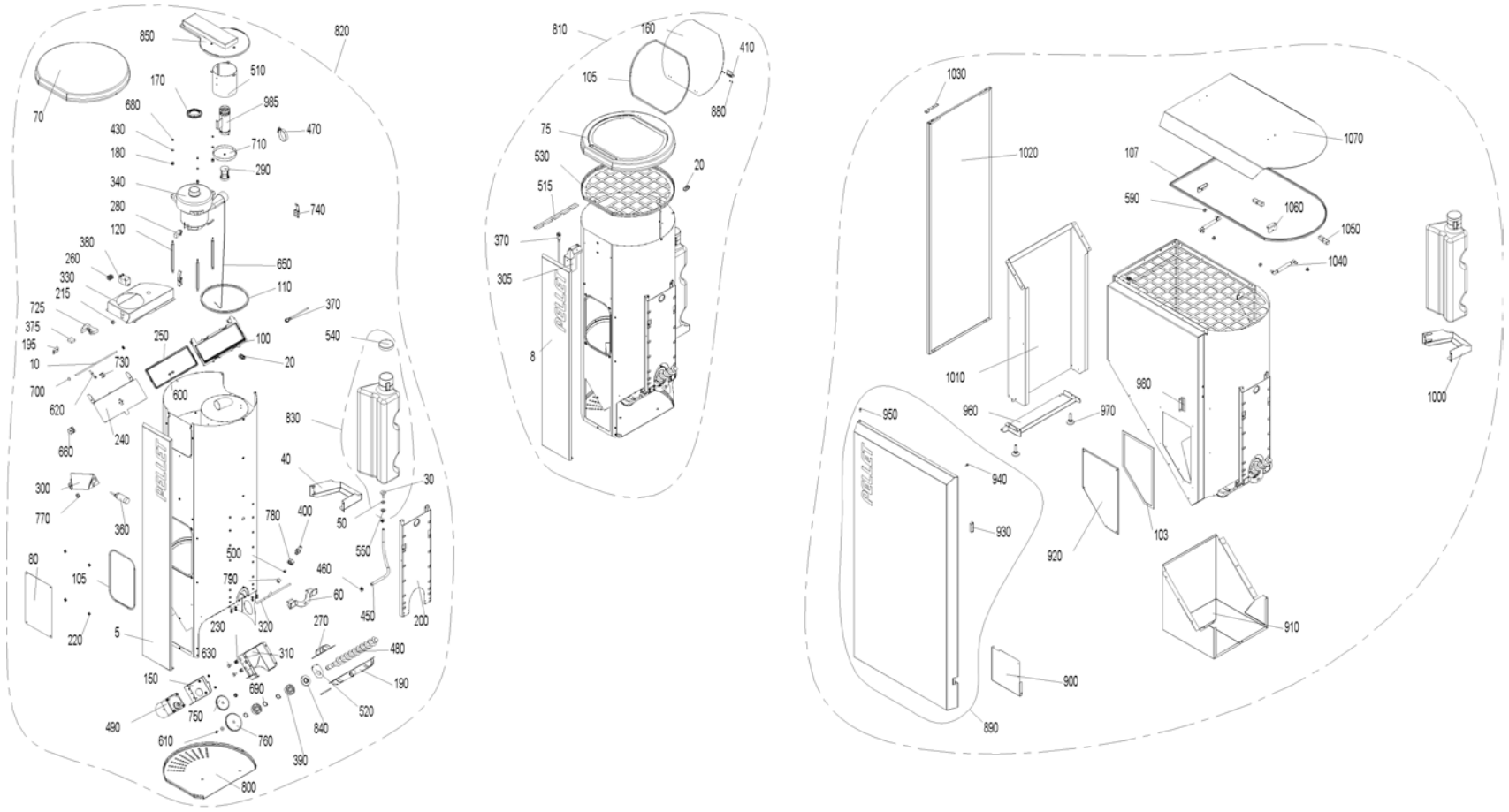
850
820
70
510
170
985
680
470
430
710
180
290
340
740
280
120
380
650
260
330
110
215
370
725
375
250
100
540
195
730
20
10
700
600
620
240
830
660
40
30
300
400
50
770
360
780
550
80
500
460
105
790
60
450
200
220
5
230
320
270
480
630
310
150
190
690
520
490
750
840
610
760
390
800
810
160
410
105
880
75
530
20
515
370
305
8
1030
1020
107
1070
590
1060
1050
1040
1010
980
960
970
1000
950
940
930
920
103
910
900
890

Item no.	Article no.	Description	Serialnumber from	Serialnumber to
5	051749	PB cover plate, grey	0	99999999999999999
8	051758	PB Klassik cover plate, grey	0	99999999999999999
10	042452	Feed axle	0	99999999999999999
20	006340	Mount connections PG9	0	99999999999999999
30	006877	Water connection	0	99999999999999999
40	051107	Water tank support	0	99999999999999999
50	006851	Support plate, motor	0	99999999999999999
60	048974	Fastening bracket	0	99999999999999999
70	050884	Pellet container cover	0	99999999999999999
75	051000	Pellet container cover Klassik	0	99999999999999999
80	050868	Cover reserve supply	0	99999999999999999
100	031254	Seal frame	0	99999999999999999
103	046665	Container seal	0	99999999999999999
105	053465	Reserve supply container seal	0	99999999999999999
107	053467	Seal profile reserve supply container 200 kg	0	99999999999999999
110	042232	Seal section	0	99999999999999999
120	031256	Distance bolt	0	99999999999999999
130	051386	Cheese head screw M5x10 Taptite	0	99999999999999999
140	051387	Cheese head screw M5x10 Taptite, grey	0	99999999999999999
150	051114	Flange, auger motor	0	99999999999999999
160	051001	Filling cover	0	99999999999999999
170	031253	Blower seal	0	99999999999999999
180	009559	Rubber grommet DK 6-9-12-7	0	99999999999999999
190	053540	Half-collar auger tube	0	99999999999999999
195	005077	Bracket	0	99999999999999999
200	048976	Retaining bracket, pellet tank	0	99999999999999999
210	045048	Cable feed with relay	0	99999999999999999
215	009542	Cable feed-through	0	99999999999999999
220	051388	Cage nut M5	0	99999999999999999
230	051112	Cage nut M8	0	99999999999999999
240	045955	Receptacle flap	0	99999999999999999
250	031257	Flap seal	0	99999999999999999
260	000965	Terminal, 3-pin	0	99999999999999999
270	048967	Clamp collar	0	99999999999999999
280	006859	Carbon brushes for blower motor	0	99999999999999999
290	042035	Piston	0	99999999999999999
300	048970	Proximity switch bracket	0	99999999999999999
305	051786	Proximity switch bracket lid	0	99999999999999999
310	048891	Auger motor bracket	0	99999999999999999
320	050867	Back-burn safeguard lead	0	99999999999999999
330	050866	Air duct	0	99999999999999999
340	044667	Blower motor 122151-12 for feed Conversion instructions for use with PMX 15-26 are enclosed! for BioWIN 10-26, PMX,BioWIN XL 35-6	0	99999999999999999
360	006821	Proximity switch, capacitive	0	99999999999999999
370	006832	Proximity switch M12, inductive	0	99999999999999999
375	005026	OKE9281 Cable protection plate	0	99999999999999999
380	005067	BW2 Relay 30A 250V	0	99999999999999999
390	012499	Grooved ball bearing	0	99999999999999999
400	042510	Burn-back protection completely assembled for PMX, BioWIN 10-26	0	99999999999999999
410	050990	Hinge M345	0	99999999999999999
420	018058	U-washer	0	99999999999999999
430	018309	Disc 5 DIN134	0	99999999999999999

Item no.	Article no.	Description	Serialnumber from	Serialnumber to
440	031753	Disc 6 ISO 7093	0	99999999999999999
450	008915	Hose 7x2	0	99999999999999999
460	006874	Hose clip ABA 11	0	99999999999999999
470	006875	Hose clip 40-60	0	99999999999999999
480	051544	Auger	0	99999999999999999
490	050901	Auger motor SPG	0	99999999999999999
500	006378	Cutting ring DL8 07-151	0	99999999999999999
510	045951	Partition plate	0	99999999999999999
510	052480	Partition plate	0	99999999999999999
515	051790	Protection plate for cable BW2	0	99999999999999999
520	048971	Protection plate	0	99999999999999999
530	051604	Protection plate, top, bottom	0	99999999999999999
540	051397	Protection cover GPN 690	0	99999999999999999
550	016567	Hexagon nut M10 with flange and gearing (not illustrated)	0	99999999999999999
560	016565	Hexagon nut M5 with flange and gearing (not illustrated)	0	99999999999999999
570	016586	Hexagon nut M5 DIN 934	0	99999999999999999
580	016594	Hexagon nut M6 DIN 934	0	99999999999999999
590	016553	Hexagon nut M8 with flange and gearing	0	99999999999999999
600	031545	Hexagon screw M5x12 DIN 7500 (not ilustrated)	0	99999999999999999
610	017051	Hexagon screw M6x12 DIN 933 (not illustrated)	0	99999999999999999
620	021504	Hexagon screw M6x45 DIN933	0	99999999999999999
630	015134	Hexagon screw M8x16 DIN 933	0	99999999999999999
640	017086	Hexagon screw M8x20 DIN 933 (not illustrated)	0	99999999999999999
650	031258	Cable	0	99999999999999999
660	031261	Cable pulley	0	99999999999999999
670	031096	Countersinking screw M4x20 DIN965 gv KS (not illustrated)	0	99999999999999999
680	016727	Lock nut M5	0	99999999999999999
690	016171	Locking ring Ø20x1.2	0	99999999999999999
700	006897	Lock washer Ø 6	0	99999999999999999
710	045949	Sieve with eye	0	99999999999999999
725	005043	Base for relay	0	99999999999999999
730	045952	Clamping piece for cable	0	99999999999999999
740	009546	Spring lock	0	99999999999999999
750	050869	Spur gear M2 Z36	0	99999999999999999
760	045771	Spur gear M2 Z45	0	99999999999999999
770	003208	Grommet 10x17.5x1.2	0	99999999999999999
780	013749	Union nut 3/8"	0	99999999999999999
790	006351	Union nut ML8 GV	0	99999999999999999
800	048986	Pellet container cladding	0	99999999999999999
810	050887	BIO91 Reserve supply container Klassik, without motor	0	99999999999999999
820	050888	BIO92 Reserve supply container Premium, without motor	0	99999999999999999
830	050379	Water tank	0	99999999999999999
840	048903	Shaft seal ring DIN 3760AS AD52 ID20	0	99999999999999999
850	045946	Cyclone cover for BioWIN2 to 1.02.2015	0	99999999999999999
850	053466	Cyclone cover	0	99999999999999999
860	019836	Cylinder screw 2.9x16 (not illustrated)	0	99999999999999999
870	018139	Cylinder screw 4.2x13 DIN7981SP (not illustrated)	0	99999999999999999
880	016768	Cylinder screw M3x5	0	99999999999999999
890	052474	Cladding door	0	99999999999999999
900	051779	Cover	0	99999999999999999
910	051755	CoverPB BioWIN2	0	99999999999999999

Item no.	Article no.	Description	Serialnumber from	Serialnumber to
920	051754	Maintenance cover BioWIN2	0	99999999999999999
930	001760	Magnetic lock, black - VW, LWP18-50, LWK	0	99999999999999999
940	000299	Silicone buffer	0	99999999999999999
950	004237	Cylinder screw M5x10 ISO 4762 (not illustrated)	0	99999999999999999
960	051753	Door mounting, bottom	0	99999999999999999
970	009990	Leg M10 x 40	0	99999999999999999
980	051773	Magnetic sheet	0	99999999999999999
985	052482	Suction pipe	0	99999999999999999
990	051775	BIO83 side panel	0	99999999999999999
990	051776	BIO82 side panel	0	99999999999999999
1000	051771	Water tank support	0	99999999999999999
1010	051614	Pedestal	0	99999999999999999
1020	051781	Left side panel, grey	0	99999999999999999
1030	051752	Door mounting, top	0	99999999999999999
1040	012600	Gas spring 4534DS 0100 N	0	99999999999999999
1050	044802	Southco hinge	0	99999999999999999
1060	051751	L-bracket	0	99999999999999999
1070	051783	Pellet container cover	0	99999999999999999

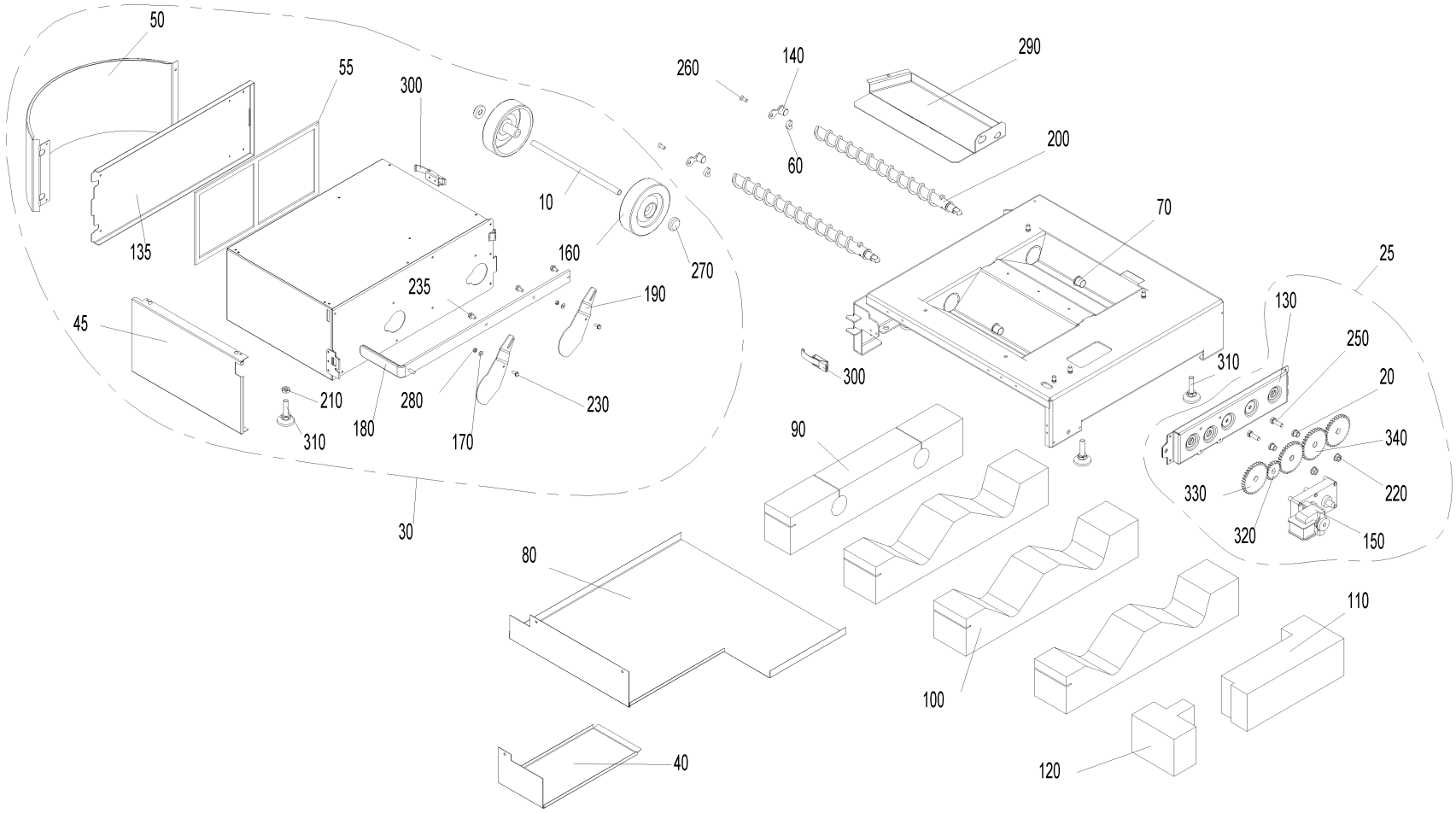
50
55
300
135
10
160
270
235
190
45
210
310
180
280
170
230
30
260
140
290
60
200
70
300
310
25
130
250
20
340
330
220
320
150
90
80
100
110
40
120

Item no.	Article no.	Description	Serialnumber from	Serialnumber to
10	051379	Ash box axle	0	99999999999999999
20	006745	Ash conveyor bearing bush	0	99999999999999999
25	054418	Ash removal, completely pre- mounted, BioWIN2	0	99999999999999999
30	051262	BIO90 Ash box, cpl	0	99999999999999999
40	051125	Cover for ash conveyor motor	0	99999999999999999
45	051633	Ash box lid	0	99999999999999999
50	051637	Ash box lid curve	0	99999999999999999
55	046665	Container seal	0	99999999999999999
60	048573	Distance	0	99999999999999999
70	012508	Friction bearing with connector	0	99999999999999999
80	051124	Cup insulation	0	99999999999999999
90	051126	Ash pipe insulation	0	99999999999999999
100	051127	Ash chamfer insulation	0	99999999999999999
110	051128	Motor insulation, rear	0	99999999999999999
120	051129	Motor insulation, front	0	99999999999999999
130	048572	Ash conveyor bracket	0	99999999999999999
135	051635	Ash box flap	0	99999999999999999
140	051120	Auger bearing	0	99999999999999999
150	044665	Motor	0	99999999999999999
160	006888	Wheel AG 125-12	0	99999999999999999
170	018309	Disc 5 DIN134	0	99999999999999999
180	051389	Ash box scraper	0	99999999999999999
190	050686	Sliding plate	0	99999999999999999
200	051542	Auger	0	99999999999999999
210	031156	Hexagon nut M10 DIN 439	0	99999999999999999
220	016553	Hexagon nut M8 with flange and gearing	0	99999999999999999
230	031545	Hexagon screw M5x12 DIN 7500 (not ilustrated)	0	99999999999999999
235	031549	Hexagon screw M6x12 DIN 7500	0	99999999999999999
240	017086	Hexagon screw M8x20 DIN 933 (not illustrated)	0	99999999999999999
250	017191	Hexagon screw M8x25 DIN 933	0	99999999999999999
260	016863	Countersinking screw M6x16	0	99999999999999999
270	006889	Washer Ø12	0	99999999999999999
280	016727	Lock nut M5	0	99999999999999999
290	050692	Ash box base	0	99999999999999999
300	009546	Spring lock	0	99999999999999999
310	009990	Leg M10 x 40	0	99999999999999999
320	047543	Spur gear M2 Z20	0	99999999999999999
330	050869	Spur gear M2 Z36	0	99999999999999999
340	048566	Spur gear M2 Z36 Ø12	0	99999999999999999

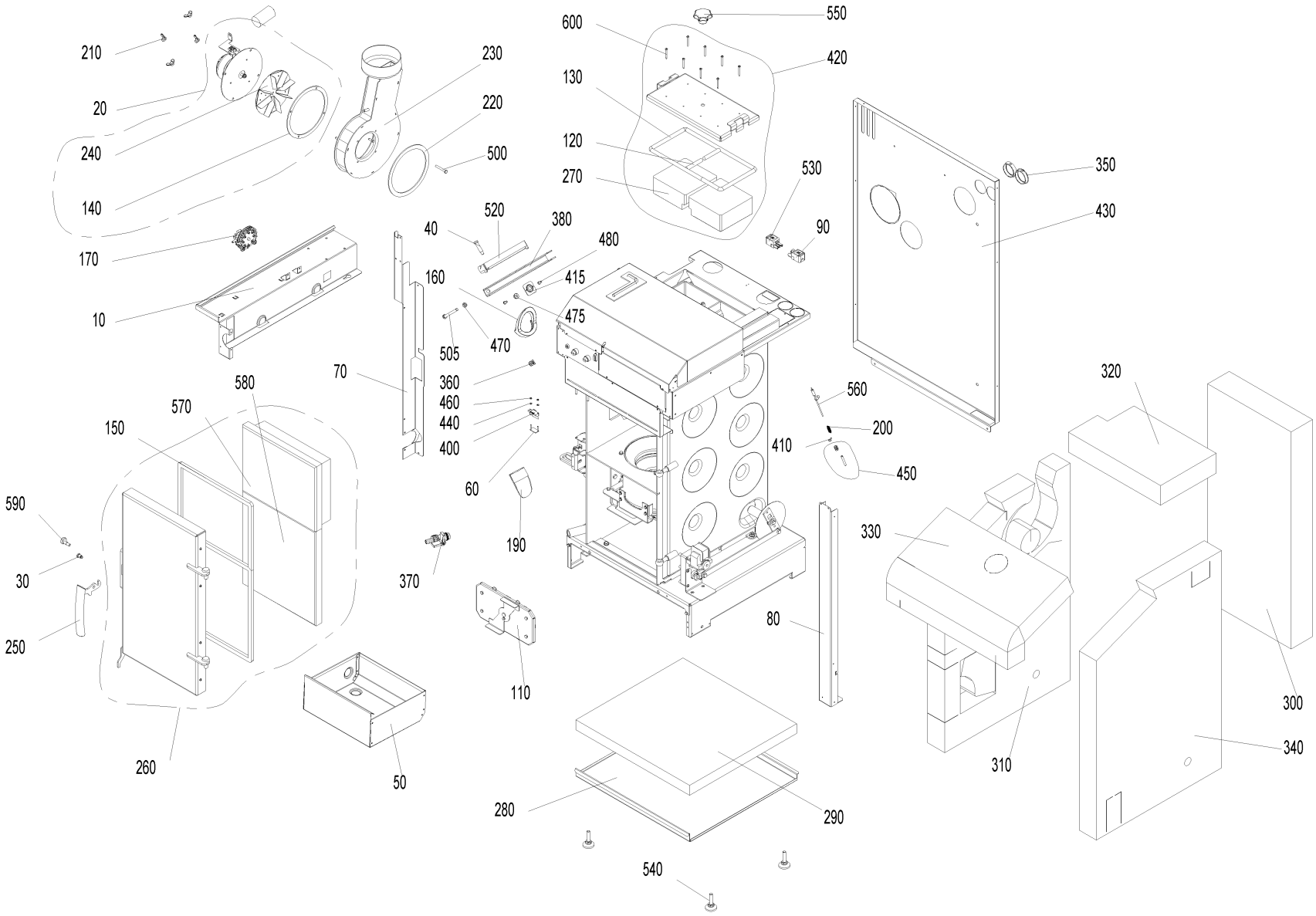
210
20
240
140
170
10
230
220
500
520
40
380
480
160
415
475
505
470
70
360
460
440
400
60
190
370
580
570
150
590
30
250
260
50
110
600
550
420
130
120
270
530
90
350
430
560
200
410
450
320
330
80
310
300
340
280
290
540

Item no.	Article no.	Description	Serialnumber from	Serialnumber to
10	050918	Cover plate	0	99999999999999999
20	053010	Flue gas blower	0	99999999999999999
30	048881	Axle for door handle CK45	0	99999999999999999
40	013813	Collar screw	0	99999999999999999
50	048928	Ash pan	0	99999999999999999
60	051045	Fastened microswitch, complete	0	99999999999999999
70	051109	Cover, left	0	99999999999999999
80	048609	Cover, right	0	99999999999999999
90	070324	Socket, 3-pin, black	0	99999999999999999
110	051056	Coasting surface cover, complete	0	99999999999999999
120	051040	Sealing cord, short	0	99999999999999999
120	051041	Sealing cord, short	0	99999999999999999
130	051017	Sealing cord for cleaning cover	0	99999999999999999
130	051034	Sealing cord for cleaning cover	0	99999999999999999
140	051006	Blower box seal	0	99999999999999999
150	048916	Heating door seal	0	99999999999999999
160	048926	Auger tube seal	0	99999999999999999
170	045404	Differential pressure watchdog	0	99999999999999999
190	048921	Down chute	0	99999999999999999
200	050647	Combustion chamber sensor spring	0	99999999999999999
210	019410	Wing nut M6	0	99999999999999999
220	051005	Blower seal	0	99999999999999999
230	053234	Blower box for BioWIN102-262	0	99999999999999999
240	052951	Blower wheel Ø160 x 25 for BioWIN2 102 - 262	0	99999999999999999
250	007480	Boiler handle	0	99999999999999999
260	051545	Heating door cpl. mounted	0	99999999999999999
270	050636	Insulating stone for cleaning cover	0	99999999999999999
270	051007	Insulating stone for cleaning cover	0	99999999999999999
280	048863	Cup insulation 10-26 K BW2	0	99999999999999999
290	048864	Floor insulation	0	99999999999999999
300	051116	Rear insulation	0	99999999999999999
310	051119	Left insulation	0	99999999999999999
320	048910	Coasting surface insulation	0	99999999999999999
330	048911	Top insulation	0	99999999999999999
340	050924	Right insulation	0	99999999999999999
350	004096	Cable feed-through 2400 black Ø50	0	99999999999999999
360	051112	Cage nut M8	0	99999999999999999
370	004385	KFE cock	0	99999999999999999
380	048611	Pellet container clamp	0	99999999999999999
400	007632	Microswitch with lever	0	99999999999999999
410	031274	Eyelet M6	0	99999999999999999
415	052484	Platelet flanged nut	0	99999999999999999
420	048870	Cleaning cover, complete	0	99999999999999999
420	050477	Cleaning cover, complete	0	99999999999999999
430	050916	Rear wall	0	99999999999999999
440	021474	Disc 3 DIN134	0	99999999999999999
450	051069	Protective tube for combustion chamber sensor, complete	0	99999999999999999
460	016551	Hexagon nut M3 DIN 934	0	99999999999999999
470	015992	Nut M8 DIN 934 V2 - LogWIN Klassik pellet ready	0	99999999999999999
475	016553	Hexagon nut M8 with flange and gearing	0	99999999999999999
480	031545	Hexagon screw M5x12 DIN 7500 (not ilustrated)	0	99999999999999999

Item no.	Article no.	Description	Serialnumber from	Serialnumber to
500	021504	Hexagon screw M6x45 DIN933	0	99999999999999999
505	016461	Hexagon screw M8x80 DIN 933	0	99999999999999999
520	048975	Clamping rail	0	99999999999999999
530	070323	Plug, 3-pin, black	0	99999999999999999
540	009990	Leg M10 x 40	0	99999999999999999
550	005125	Star handle M12 x 35	0	99999999999999999
560	007626	Thermocouple	0	99999999999999999
570	048914	Door stone	0	99999999999999999
580	050447	Bottom door stone	0	99999999999999999
590	051004	Locking pin	0	99999999999999999
600	016719	Cylinder drilling screw 4.2 x 38 DIN7504	0	99999999999999999

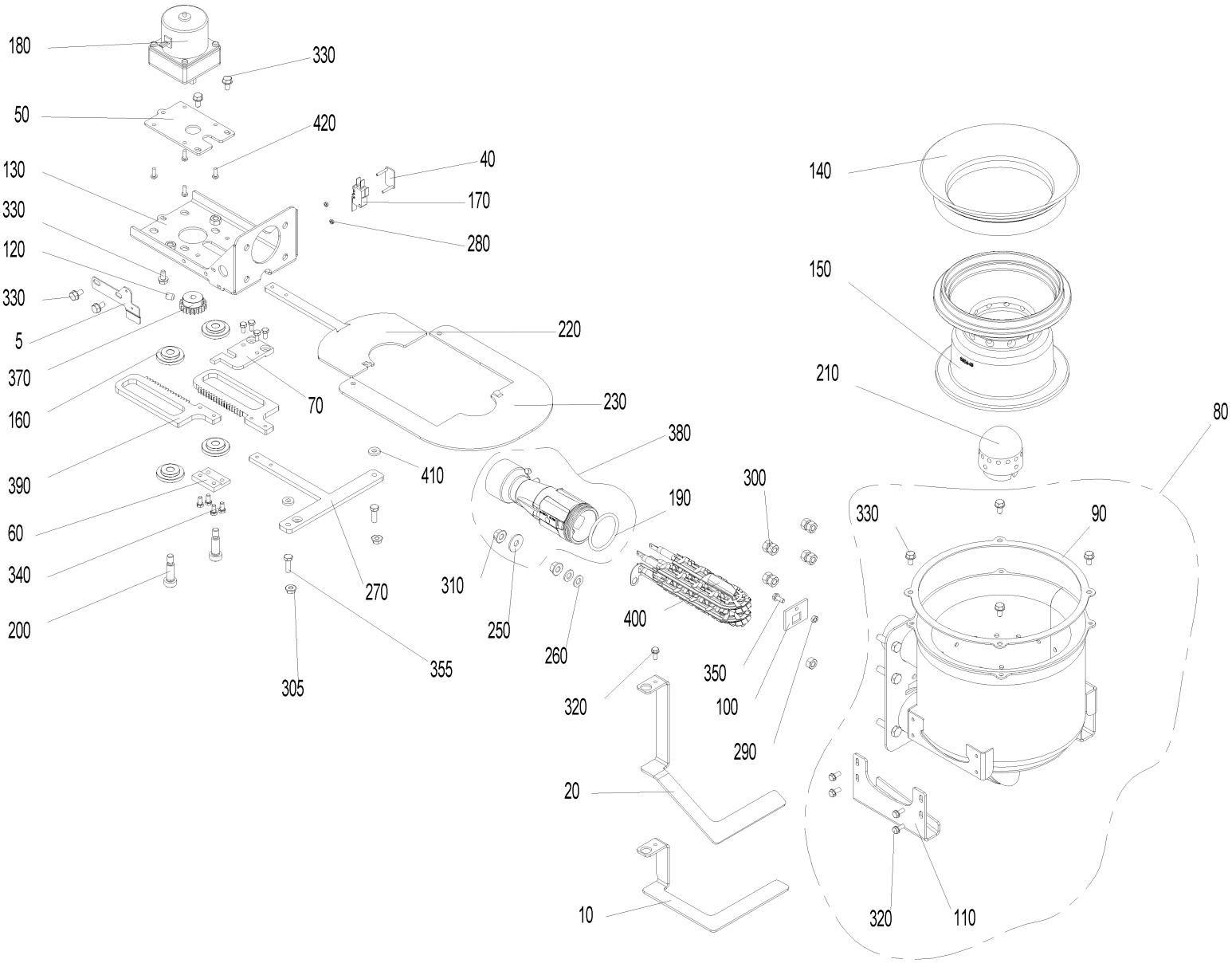
180
330
50
420
130
40
170
330
280
120
330
5
220
370
70
230
160
380
390
410
300
190
60
340
270
310
250
400
200
260
350
305
355
320
100
290
20
10
140
150
210
80
330
90
320
110

Item no.	Article no.	Description	Serialnumber from	Serialnumber to
5	053544	Stop plate	0	99999999999999999
10	051048	Ash stop plate, Klassik, Premium	0	99999999999999999
20	051046	Microswitch fastening	0	99999999999999999
40	051045	Fastened microswitch, complete	0	99999999999999999
50	050632	Bracket mounting plate	0	99999999999999999
60	050649	Mounting plate	0	99999999999999999
70	051042	Mounting plate, top	0	99999999999999999
80	051065	Burner	0	99999999999999999
90	048861	Burner seal	0	99999999999999999
100	048841	Driving rod feed-through	0	99999999999999999
110	048842	Grate plate guide	0	99999999999999999
120	033112	Setscrew M8x10 DIN916	0	99999999999999999
125	053643	Cable - ignition element for BW1, BW2, FireWIN and VarioWIN	0	99999999999999999
130	050639	Shake-out bracket	0	99999999999999999
140	050642	Cone, top part 45°	0	99999999999999999
150	050643	Cone, bottom part	0	99999999999999999
160	007125	Bearing for vibrating drive	0	99999999999999999
170	007632	Microswitch with lever	0	99999999999999999
180	012561	Shake-out motor	0	99999999999999999
190	006849	O-ring FPM70 45 x 4	0	99999999999999999
200	017048	Shoulder screw M8 10x25 ISO 7379	0	99999999999999999
210	007210	Primary air pin	0	99999999999999999
220	051051	Grate plate, left	0	99999999999999999
230	053539	Grate plate, right	0	99999999999999999
250	031755	Disc 8 ISO 7093	0	99999999999999999
260	024779	Disc 8 ISO 7089	0	99999999999999999
270	051023	Grate plate scraper	0	99999999999999999
280	016551	Hexagon nut M3 DIN 934	0	99999999999999999
290	017035	Hexagon nut M5 DIN 934	0	99999999999999999
300	031153	Hexagon nut M8 DIN 934	0	99999999999999999
305	016566	Hexagon nut with flange and gearing M6	0	99999999999999999
310	016553	Hexagon nut M8 with flange and gearing	0	99999999999999999
320	031545	Hexagon screw M5x12 DIN 7500 (not ilustrated)	0	99999999999999999
330	031549	Hexagon screw M6x12 DIN 7500	0	99999999999999999
340	016756	Hexagon screw M5x10 DIN 933	0	99999999999999999
355	015471	Hexagon screw M6x20 DIN 933	0	99999999999999999
370	007222	Spur gear M1,5; Z21	0	99999999999999999
380	051066	Venturi nozzle	0	99999999999999999
390	048161	Steering rack BioWin2 10-26	0	99999999999999999
400	055201	Ignition element BioWIN10-26, FireWIN from lot 15, VarioWIN from lot 15 BioWIN XL, LWK	0	99999999999999999
402	053851	de: Zündelement inkl. Kabel beigelegt.	0	99999999999999999
410	051054	Intermediate plate	0	99999999999999999
420	016780	Cylinder screw M4x12 DIN 7985	0	99999999999999999

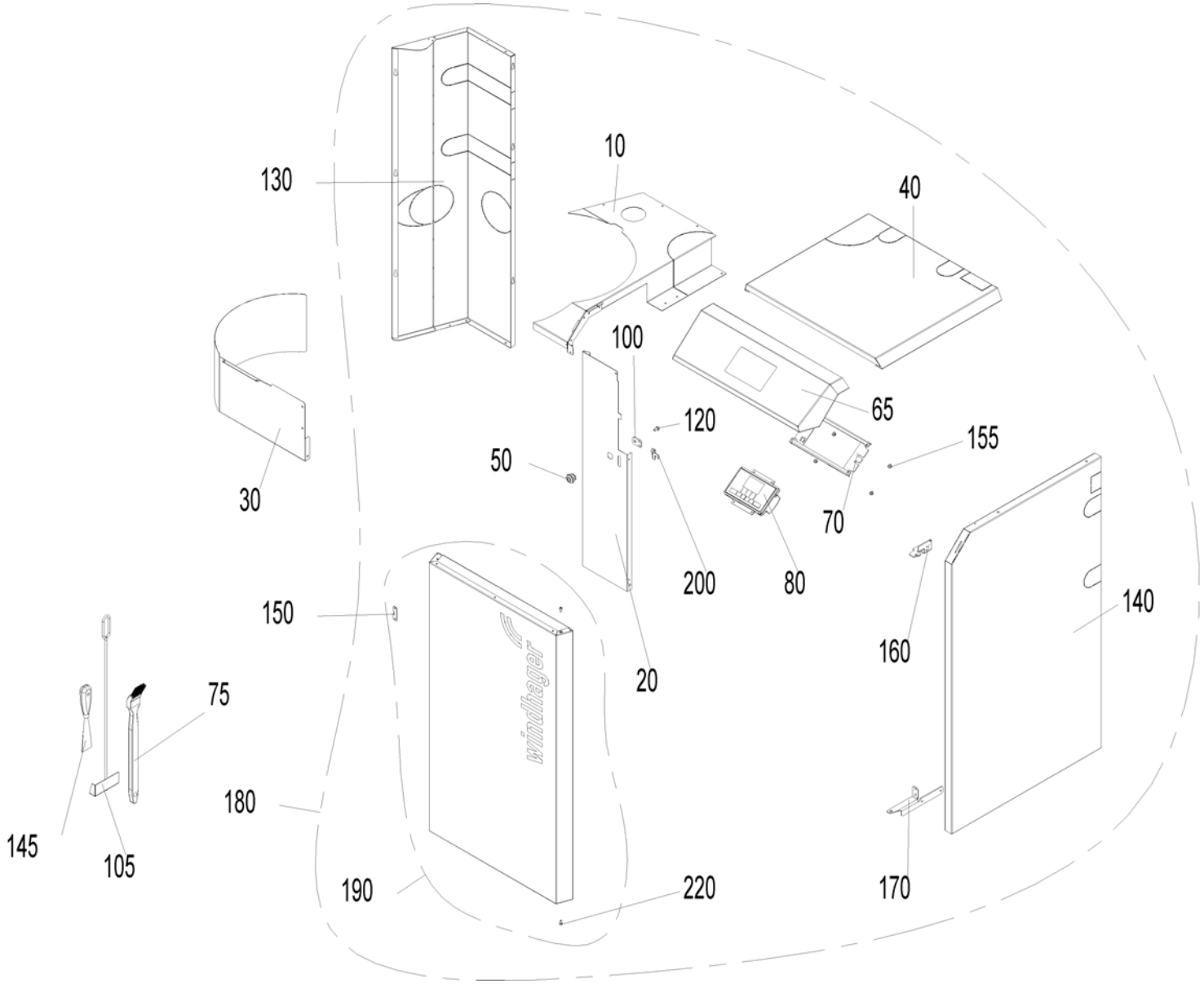
130
10
40
100
65
120
155
50
30
70
200
80
150
140
160
20
75
180
145
105
190
220
170

Item no.	Article no.	Description	Serialnumber from	Serialnumber to
10	051605	Cover, rear left	0	99999999999999999
10	051606	Cover, rear left	0	99999999999999999
20	050876	Cover, left	0	99999999999999999
30	050371	BIO87 Pellet container cover	0	99999999999999999
40	050875	Coasting surface cover	0	99999999999999999
40	050940	Coasting surface cover	0	99999999999999999
50	012256	Turning bolt	0	99999999999999999
65	053001	Front operation InfoWIN	0	99999999999999999
70	051787	InfoWIN holder	0	99999999999999999
75	017090	Cleaning brush	0	99999999999999999
80	009879	InfoWIN plus F4 LWK, BioWIN2	0	99999999999999999
100	047891	Driver	0	99999999999999999
105	072192	Scratcher	0	99999999999999999
110	031545	Hexagon screw M5x12 DIN 7500 (not ilustrated)	0	99999999999999999
120	031549	Hexagon screw M6x12 DIN 7500	0	99999999999999999
130	050878	Left side panel	0	99999999999999999
130	050958	Left side panel	0	99999999999999999
140	050874	Right side panel	0	99999999999999999
140	050932	Right side panel	0	99999999999999999
145	009540	Spatula	0	99999999999999999
150	047893	Clamping plate	0	99999999999999999
155	016565	Hexagon nut M5 with flange and gearing (not illustrated)	0	99999999999999999
160	048988	Door mounting, top	0	99999999999999999
170	048987	Door mounting, bottom	0	99999999999999999
180	050907	BIO88 Cladding complete	0	99999999999999999
180	050908	BIO89 Cladding complete	0	99999999999999999
190	051608	Cladding door	0	99999999999999999
200	047892	Locking plate	0	99999999999999999
210	018139	Cylinder screw 4.2x13 DIN7981SP (not illustrated)	0	99999999999999999
220	004237	Cylinder screw M5x10 ISO 4762 (not illustrated)	0	99999999999999999

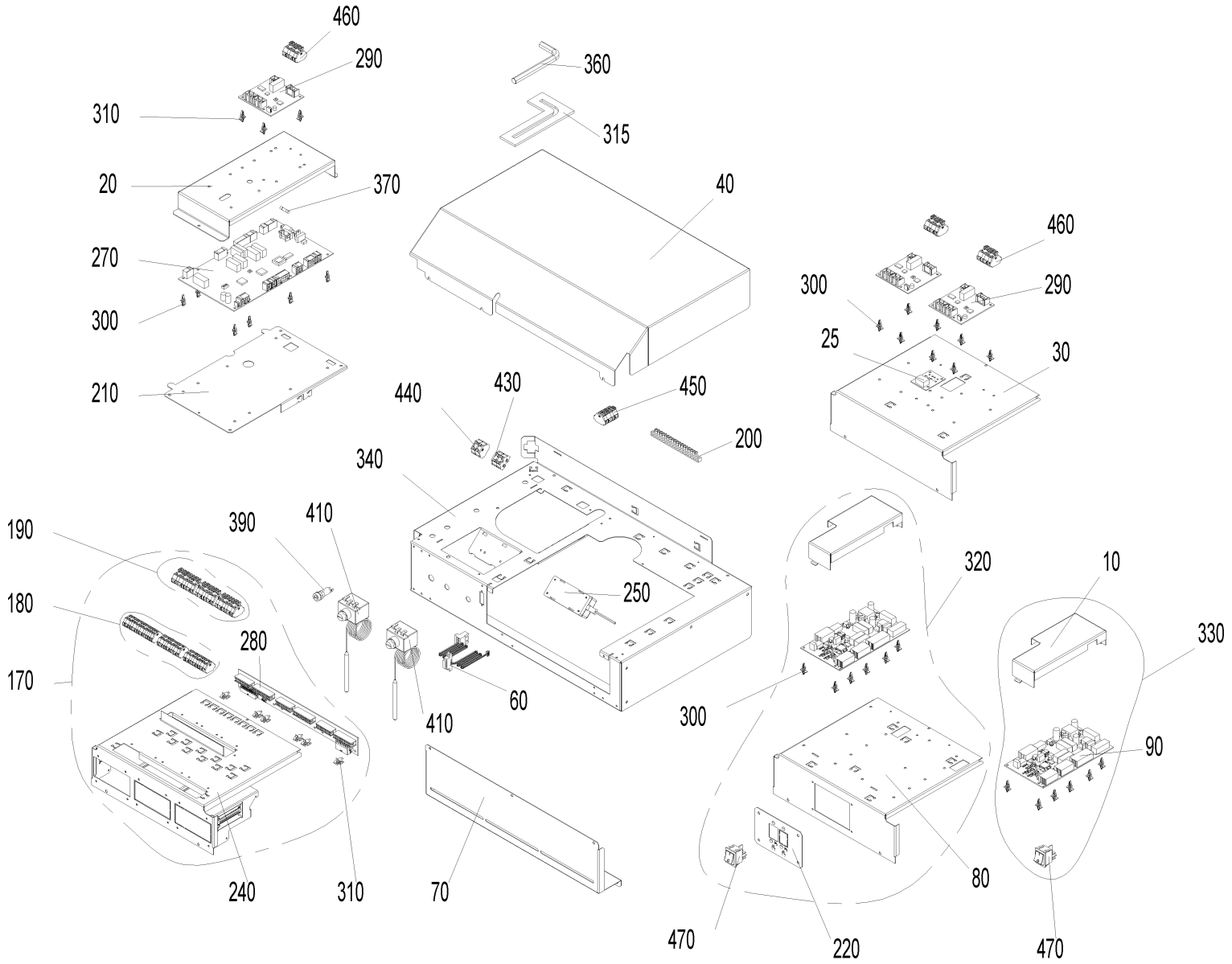
460
290
310
20
370
270
300
210
360
315
40
460
300
290
25
30
440
430
450
200
340
250
190
180
170
390
410
280
60
410
240
310
70
320
10
330
300
90
80
470
220
470

Item no.	Article no.	Description	Serialnumber from	Serialnumber to
10	048750	BUML TTL 2Z cover	0	99999999999999999
20	048955	PCB cover	0	99999999999999999
25	012012	LON connection diagram	0	99999999999999999
30	051382	REG000BW2 External control system cover	0	99999999999999999
40	048618	Control panel cover	0	99999999999999999
60	050970	Ribbon cable, Lon	0	99999999999999999
70	048902	Retaining plate	0	99999999999999999
80	048613	Retaining bracket, REG	0	99999999999999999
90	009767	BUML TTL 2Z interface	0	99999999999999999
100	002059	Power supply cable (not illustrated)	0	99999999999999999
110	050971	Power supply cable OT (not illustrated)	0	99999999999999999
120	043586	Draught fan cable (not illustrated)	0	99999999999999999
130	003719	TTL cable (not illustrated)	0	99999999999999999
140	040333	Wiring harness 12 V (not illustrated)	0	99999999999999999
150	040335	Wiring harness 230 V (not illustrated)	0	99999999999999999
160	040334	Wiring harness AAT HFR (not illustrated)	0	99999999999999999
170	050910	MESBW2 Cable harness	0	99999999999999999
180	051415	Cable harness MES extra-low voltage 12 V	0	99999999999999999
190	051414	Cable harness MES low voltage 230 V	0	99999999999999999
200	009928	Terminal bar	0	99999999999999999
210	050959	Bracket fireing automat	0	99999999999999999
220	048952	Rocker switch bracket	0	99999999999999999
230	018190	Oval-head screw 3.2x16 (not illustrated)	0	99999999999999999
240	051390	Module guide complete	0	99999999999999999
250	051645	Power supply unit 12V	0	99999999999999999
260	005784	Pin connector (not illustrated)	0	99999999999999999
270	011990	PCB, FMP BW2	0	99999999999999999
280	050996	MES PCB	0	99999999999999999
290	011994	PCB board, FMO-J	0	99999999999999999
300	007609	PCB holder	0	99999999999999999
310	007549	PCB holder, Richco	0	99999999999999999
315	051766	Position hexagon pin screwdriver	0	99999999999999999
320	050912	REG 021	0	99999999999999999
330	050913	REG 024	0	99999999999999999
340	048605	Control panel, floor	0	99999999999999999
360	027391	Hexagon pin screwdriver 10 mm DIN 911	0	99999999999999999
370	006900	Fuse 1 A T 5x20 ceramic tube	0	99999999999999999
380	003228	6.3A fuse (not illustrated)	0	99999999999999999
390	003663	Fuse holder	0	99999999999999999
400	007629	Immersion sensor PT 1000 (not illustrated)	0	99999999999999999
405	502186	MES009M Immersion sensor	0	99999999999999999
410	005672	Thermostat LS1+100-6U	0	99999999999999999
415	003208	Grommet 10x17.5x1.2	0	99999999999999999
430	006833	Wago terminal block 261; 4-pin "12V GND"	0	99999999999999999
440	006834	Wago terminal block 261; 4-pin "safety 1-4"	0	99999999999999999
450	007656	Wago terminal block 261; 6-pin	0	99999999999999999
460	010047	Wago terminal block 261; 6-pin extra PCB	0	99999999999999999
470	005563	Rocker switch SW/GR 0-1	0	99999999999999999
480	018140	Cylinder screw 4.2x13 DIN7981ST (not illustrated)	0	99999999999999999

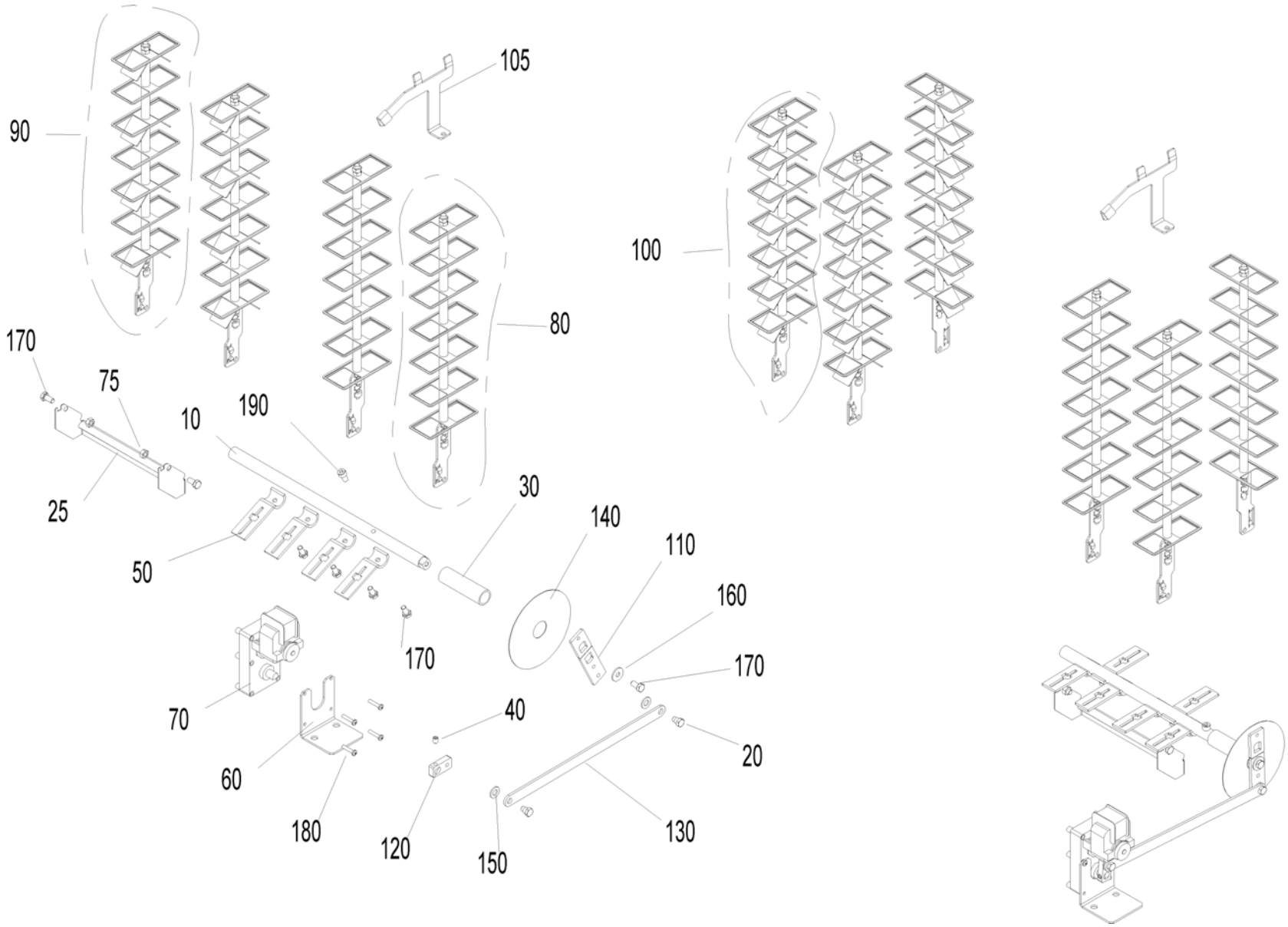
90
105
80
100
170
75
10
190
25
50
30
140
110
160
170
170
70
40
20
60
180
120
150
130

Item no.	Article no.	Description	Serialnumber from	Serialnumber to
10	048882	Axle heating surface BW2 10-26	0	99999999999999999
20	012502	Collar screw	0	99999999999999999
25	051624	Ash sheet	0	99999999999999999
30	048980	Distance rod	0	99999999999999999
40	033112	Setscrew M8x10 DIN916	0	99999999999999999
50	051547	Lever for cleaning heating surfaces	0	99999999999999999
60	051121	L-bracket, motor HFR	0	99999999999999999
70	044665	Motor	0	99999999999999999
75	015992	Nut M8 DIN 934 V2 - LogWIN Klassik pellet ready	0	99999999999999999
80	051609	Clearer flat	0	99999999999999999
90	051610	Clearer flat with turbulator	0	99999999999999999
100	051611	Clearer flat with turbulator	0	99999999999999999
105	051076	Cleaning plate for combustion chamber	0	99999999999999999
110	048884	Shaker lever 1	0	99999999999999999
120	048885	Shaker lever 2	0	99999999999999999
130	051367	Shaker lever 3	0	99999999999999999
140	051122	Disc	0	99999999999999999
150	024780	Disc 10 ISO7089	0	99999999999999999
160	031755	Disc 8 ISO 7093	0	99999999999999999
170	016721	Hexagon screw M8x16 DIN 933	0	99999999999999999
180	016837	Cylinder screw M5x25 ISO 7045	0	99999999999999999
190	016773	Cylinder screw M8x16 ISO 4762	0	99999999999999999

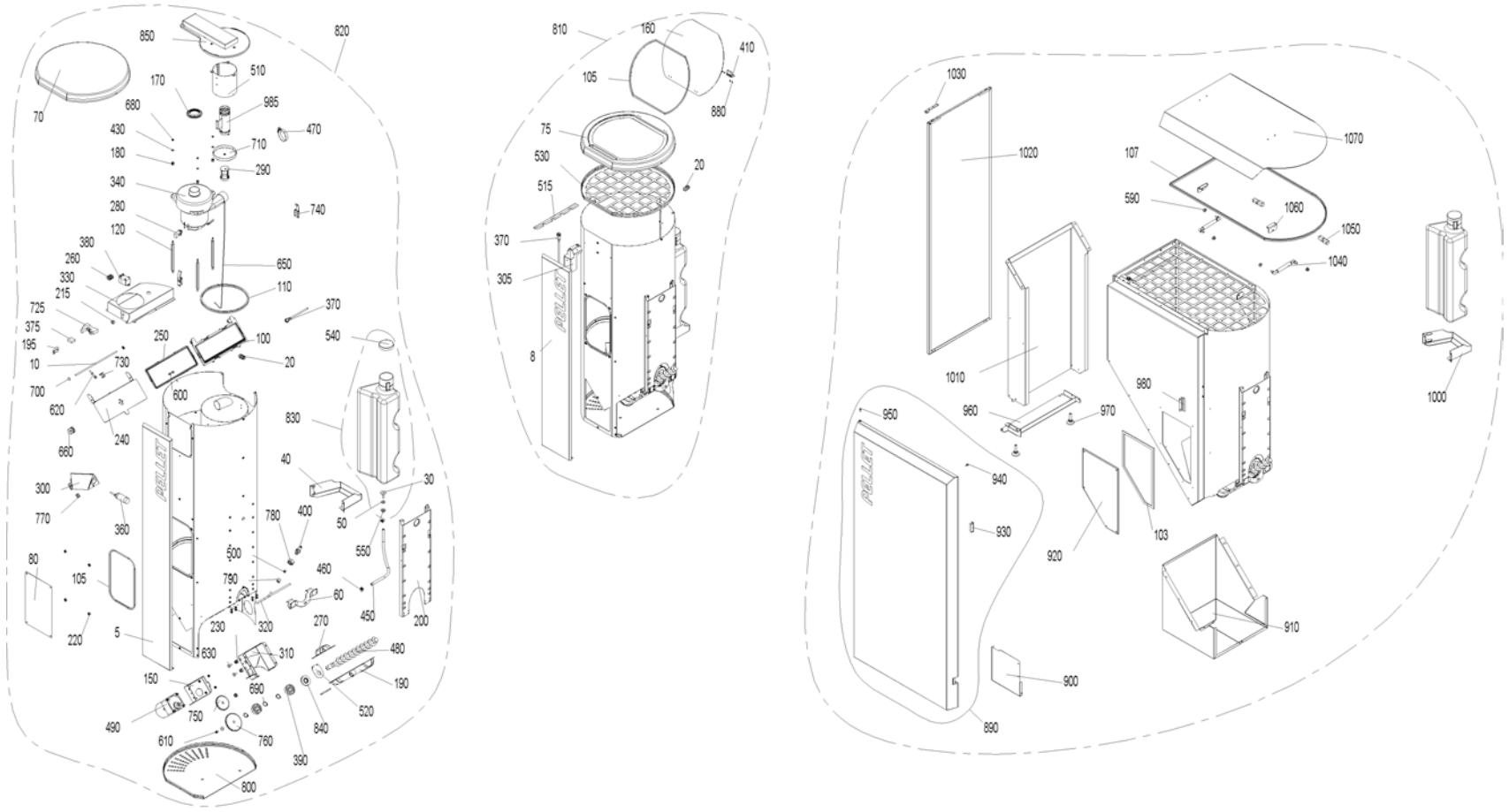
850
820
70
510
170
985
680
470
430
710
180
290
340
740
280
120
380
650
260
330
110
215
370
725
375
250
100
540
195
730
20
10
700
600
620
240
830
660
40
30
300
400
50
770
360
780
550
80
500
460
105
790
60
450
200
220
5
230
320
270
480
630
310
150
190
690
520
490
750
840
610
760
390
800
810
160
410
105
880
75
530
20
515
370
305
8
1030
1020
107
1070
590
1060
1050
1040
1010
980
960
970
1000
950
940
930
920
103
910
900
890

Item no.	Article no.	Description	Serialnumber from	Serialnumber to
5	051749	PB cover plate, grey	0	99999999999999999
8	051758	PB Klassik cover plate, grey	0	99999999999999999
10	042452	Feed axle	0	99999999999999999
20	006340	Mount connections PG9	0	99999999999999999
30	006877	Water connection	0	99999999999999999
40	051107	Water tank support	0	99999999999999999
50	006851	Support plate, motor	0	99999999999999999
60	048974	Fastening bracket	0	99999999999999999
70	050884	Pellet container cover	0	99999999999999999
75	051000	Pellet container cover Klassik	0	99999999999999999
80	050868	Cover reserve supply	0	99999999999999999
100	031254	Seal frame	0	99999999999999999
103	046665	Container seal	0	99999999999999999
105	053465	Reserve supply container seal	0	99999999999999999
107	053467	Seal profile reserve supply container 200 kg	0	99999999999999999
110	042232	Seal section	0	99999999999999999
120	031256	Distance bolt	0	99999999999999999
130	051386	Cheese head screw M5x10 Taptite	0	99999999999999999
140	051387	Cheese head screw M5x10 Taptite, grey	0	99999999999999999
150	051114	Flange, auger motor	0	99999999999999999
160	051001	Filling cover	0	99999999999999999
170	031253	Blower seal	0	99999999999999999
180	009559	Rubber grommet DK 6-9-12-7	0	99999999999999999
190	053540	Half-collar auger tube	0	99999999999999999
195	005077	Bracket	0	99999999999999999
200	048976	Retaining bracket, pellet tank	0	99999999999999999
210	045048	Cable feed with relay	0	99999999999999999
215	009542	Cable feed-through	0	99999999999999999
220	051388	Cage nut M5	0	99999999999999999
230	051112	Cage nut M8	0	99999999999999999
240	045955	Receptacle flap	0	99999999999999999
250	031257	Flap seal	0	99999999999999999
260	000965	Terminal, 3-pin	0	99999999999999999
270	048967	Clamp collar	0	99999999999999999
280	006859	Carbon brushes for blower motor	0	99999999999999999
290	042035	Piston	0	99999999999999999
300	048970	Proximity switch bracket	0	99999999999999999
305	051786	Proximity switch bracket lid	0	99999999999999999
310	048891	Auger motor bracket	0	99999999999999999
320	050867	Back-burn safeguard lead	0	99999999999999999
330	050866	Air duct	0	99999999999999999
340	044667	Blower motor 122151-12 for feed Conversion instructions for use with PMX 15-26 are enclosed! for BioWIN 10-26, PMX,BioWIN XL 35-6	0	99999999999999999
360	006821	Proximity switch, capacitive	0	99999999999999999
370	006832	Proximity switch M12, inductive	0	99999999999999999
375	005026	OKE9281 Cable protection plate	0	99999999999999999
380	005067	BW2 Relay 30A 250V	0	99999999999999999
390	012499	Grooved ball bearing	0	99999999999999999
400	042510	Burn-back protection completely assembled for PMX, BioWIN 10-26	0	99999999999999999
410	050990	Hinge M345	0	99999999999999999
420	018058	U-washer	0	99999999999999999
430	018309	Disc 5 DIN134	0	99999999999999999

Item no.	Article no.	Description	Serialnumber from	Serialnumber to
440	031753	Disc 6 ISO 7093	0	99999999999999999
450	008915	Hose 7x2	0	99999999999999999
460	006874	Hose clip ABA 11	0	99999999999999999
470	006875	Hose clip 40-60	0	99999999999999999
480	051544	Auger	0	99999999999999999
490	050901	Auger motor SPG	0	99999999999999999
500	006378	Cutting ring DL8 07-151	0	99999999999999999
510	045951	Partition plate	0	99999999999999999
510	052480	Partition plate	0	99999999999999999
515	051790	Protection plate for cable BW2	0	99999999999999999
520	048971	Protection plate	0	99999999999999999
530	051604	Protection plate, top, bottom	0	99999999999999999
540	051397	Protection cover GPN 690	0	99999999999999999
550	016567	Hexagon nut M10 with flange and gearing (not illustrated)	0	99999999999999999
560	016565	Hexagon nut M5 with flange and gearing (not illustrated)	0	99999999999999999
570	016586	Hexagon nut M5 DIN 934	0	99999999999999999
580	016594	Hexagon nut M6 DIN 934	0	99999999999999999
590	016553	Hexagon nut M8 with flange and gearing	0	99999999999999999
600	031545	Hexagon screw M5x12 DIN 7500 (not ilustrated)	0	99999999999999999
610	017051	Hexagon screw M6x12 DIN 933 (not illustrated)	0	99999999999999999
620	021504	Hexagon screw M6x45 DIN933	0	99999999999999999
630	015134	Hexagon screw M8x16 DIN 933	0	99999999999999999
640	017086	Hexagon screw M8x20 DIN 933 (not illustrated)	0	99999999999999999
650	031258	Cable	0	99999999999999999
660	031261	Cable pulley	0	99999999999999999
670	031096	Countersinking screw M4x20 DIN965 gv KS (not illustrated)	0	99999999999999999
680	016727	Lock nut M5	0	99999999999999999
690	016171	Locking ring Ø20x1.2	0	99999999999999999
700	006897	Lock washer Ø 6	0	99999999999999999
710	045949	Sieve with eye	0	99999999999999999
725	005043	Base for relay	0	99999999999999999
730	045952	Clamping piece for cable	0	99999999999999999
740	009546	Spring lock	0	99999999999999999
750	050869	Spur gear M2 Z36	0	99999999999999999
760	045771	Spur gear M2 Z45	0	99999999999999999
770	003208	Grommet 10x17.5x1.2	0	99999999999999999
780	013749	Union nut 3/8"	0	99999999999999999
790	006351	Union nut ML8 GV	0	99999999999999999
800	048986	Pellet container cladding	0	99999999999999999
810	050887	BIO91 Reserve supply container Klassik, without motor	0	99999999999999999
820	050888	BIO92 Reserve supply container Premium, without motor	0	99999999999999999
830	050379	Water tank	0	99999999999999999
840	048903	Shaft seal ring DIN 3760AS AD52 ID20	0	99999999999999999
850	045946	Cyclone cover for BioWIN2 to 1.02.2015	0	99999999999999999
850	053466	Cyclone cover	0	99999999999999999
860	019836	Cylinder screw 2.9x16 (not illustrated)	0	99999999999999999
870	018139	Cylinder screw 4.2x13 DIN7981SP (not illustrated)	0	99999999999999999
880	016768	Cylinder screw M3x5	0	99999999999999999
890	052474	Cladding door	0	99999999999999999
900	051779	Cover	0	99999999999999999
910	051755	CoverPB BioWIN2	0	99999999999999999

Item no.	Article no.	Description	Serialnumber from	Serialnumber to
920	051754	Maintenance cover BioWIN2	0	99999999999999999
930	001760	Magnetic lock, black - VW, LWP18-50, LWK	0	99999999999999999
940	000299	Silicone buffer	0	99999999999999999
950	004237	Cylinder screw M5x10 ISO 4762 (not illustrated)	0	99999999999999999
960	051753	Door mounting, bottom	0	99999999999999999
970	009990	Leg M10 x 40	0	99999999999999999
980	051773	Magnetic sheet	0	99999999999999999
985	052482	Suction pipe	0	99999999999999999
990	051775	BIO83 side panel	0	99999999999999999
990	051776	BIO82 side panel	0	99999999999999999
1000	051771	Water tank support	0	99999999999999999
1010	051614	Pedestal	0	99999999999999999
1020	051781	Left side panel, grey	0	99999999999999999
1030	051752	Door mounting, top	0	99999999999999999
1040	012600	Gas spring 4534DS 0100 N	0	99999999999999999
1050	044802	Southco hinge	0	99999999999999999
1060	051751	L-bracket	0	99999999999999999
1070	051783	Pellet container cover	0	99999999999999999

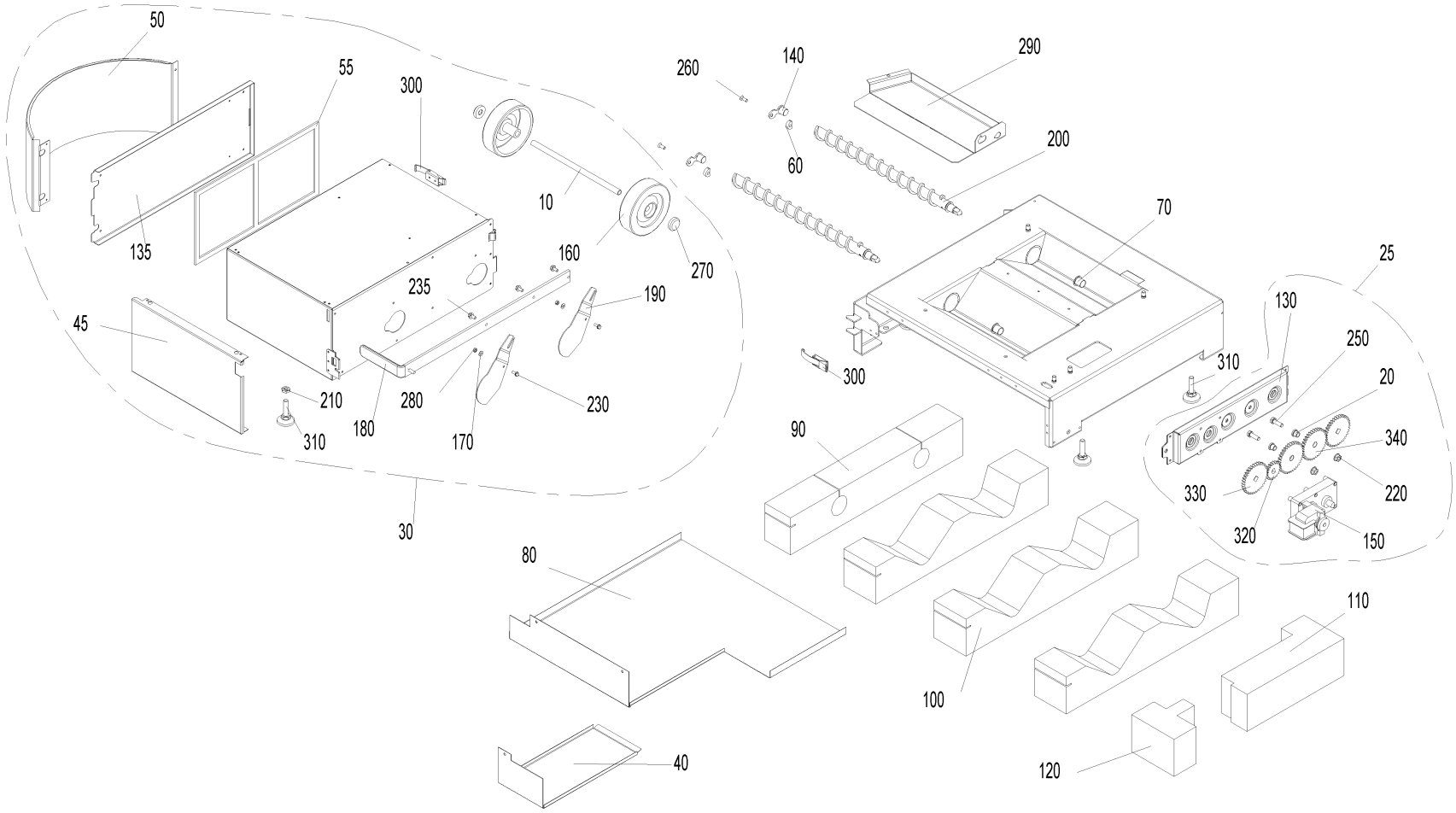
50
55
300
135
10
160
270
235
190
45
210
310
180
280
170
230
30
260
140
290
60
200
70
300
310
25
130
250
20
340
330
220
320
150
90
80
100
110
40
120

Item no.	Article no.	Description	Serialnumber from	Serialnumber to
10	051379	Ash box axle	0	99999999999999999
20	006745	Ash conveyor bearing bush	0	99999999999999999
25	054418	Ash removal, completely pre- mounted, BioWIN2	0	99999999999999999
30	051262	BIO90 Ash box, cpl	0	99999999999999999
40	051125	Cover for ash conveyor motor	0	99999999999999999
45	051633	Ash box lid	0	99999999999999999
50	051637	Ash box lid curve	0	99999999999999999
55	046665	Container seal	0	99999999999999999
60	048573	Distance	0	99999999999999999
70	012508	Friction bearing with connector	0	99999999999999999
80	051124	Cup insulation	0	99999999999999999
90	051126	Ash pipe insulation	0	99999999999999999
100	051127	Ash chamfer insulation	0	99999999999999999
110	051128	Motor insulation, rear	0	99999999999999999
120	051129	Motor insulation, front	0	99999999999999999
130	048572	Ash conveyor bracket	0	99999999999999999
135	051635	Ash box flap	0	99999999999999999
140	051120	Auger bearing	0	99999999999999999
150	044665	Motor	0	99999999999999999
160	006888	Wheel AG 125-12	0	99999999999999999
170	018309	Disc 5 DIN134	0	99999999999999999
180	051389	Ash box scraper	0	99999999999999999
190	050686	Sliding plate	0	99999999999999999
200	051542	Auger	0	99999999999999999
210	031156	Hexagon nut M10 DIN 439	0	99999999999999999
220	016553	Hexagon nut M8 with flange and gearing	0	99999999999999999
230	031545	Hexagon screw M5x12 DIN 7500 (not ilustrated)	0	99999999999999999
235	031549	Hexagon screw M6x12 DIN 7500	0	99999999999999999
240	017086	Hexagon screw M8x20 DIN 933 (not illustrated)	0	99999999999999999
250	017191	Hexagon screw M8x25 DIN 933	0	99999999999999999
260	016863	Countersinking screw M6x16	0	99999999999999999
270	006889	Washer Ø12	0	99999999999999999
280	016727	Lock nut M5	0	99999999999999999
290	050692	Ash box base	0	99999999999999999
300	009546	Spring lock	0	99999999999999999
310	009990	Leg M10 x 40	0	99999999999999999
320	047543	Spur gear M2 Z20	0	99999999999999999
330	050869	Spur gear M2 Z36	0	99999999999999999
340	048566	Spur gear M2 Z36 Ø12	0	99999999999999999

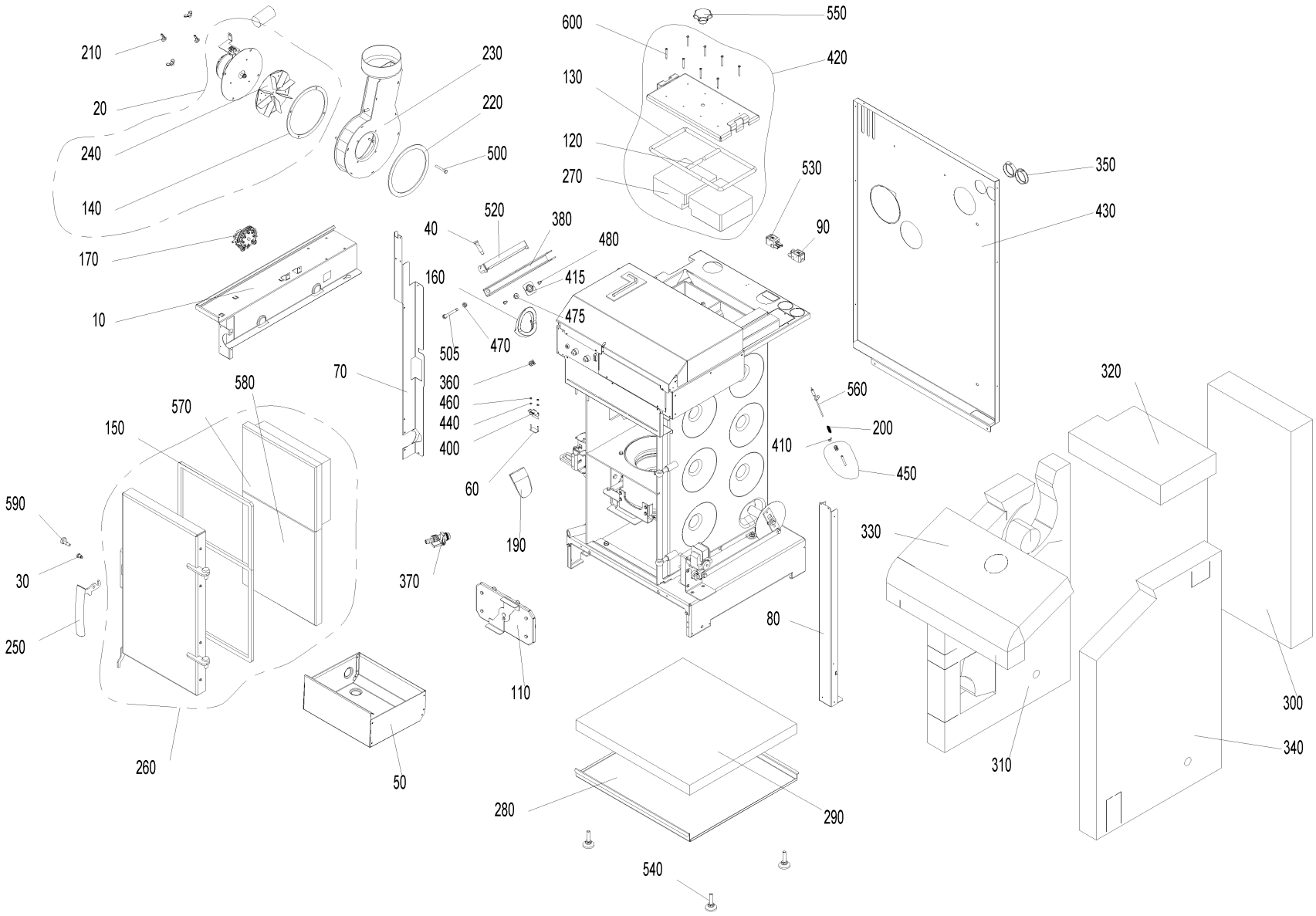
210
20
240
140
170
10
230
220
500
520
40
380
480
160
415
475
505
470
70
360
460
440
400
60
190
370
580
570
150
590
30
250
260
50
110
600
550
420
130
120
270
530
90
350
430
560
200
410
450
320
330
80
310
300
340
280
290
540

Item no.	Article no.	Description	Serialnumber from	Serialnumber to
10	050918	Cover plate	0	99999999999999999
20	053010	Flue gas blower	0	99999999999999999
30	048881	Axle for door handle CK45	0	99999999999999999
40	013813	Collar screw	0	99999999999999999
50	048928	Ash pan	0	99999999999999999
60	051045	Fastened microswitch, complete	0	99999999999999999
70	051109	Cover, left	0	99999999999999999
80	048609	Cover, right	0	99999999999999999
90	070324	Socket, 3-pin, black	0	99999999999999999
110	051056	Coasting surface cover, complete	0	99999999999999999
120	051040	Sealing cord, short	0	99999999999999999
120	051041	Sealing cord, short	0	99999999999999999
130	051017	Sealing cord for cleaning cover	0	99999999999999999
130	051034	Sealing cord for cleaning cover	0	99999999999999999
140	051006	Blower box seal	0	99999999999999999
150	048916	Heating door seal	0	99999999999999999
160	048926	Auger tube seal	0	99999999999999999
170	045404	Differential pressure watchdog	0	99999999999999999
190	048921	Down chute	0	99999999999999999
200	050647	Combustion chamber sensor spring	0	99999999999999999
210	019410	Wing nut M6	0	99999999999999999
220	051005	Blower seal	0	99999999999999999
230	053234	Blower box for BioWIN102-262	0	99999999999999999
240	052951	Blower wheel Ø160 x 25 for BioWIN2 102 - 262	0	99999999999999999
250	007480	Boiler handle	0	99999999999999999
260	051545	Heating door cpl. mounted	0	99999999999999999
270	050636	Insulating stone for cleaning cover	0	99999999999999999
270	051007	Insulating stone for cleaning cover	0	99999999999999999
280	048863	Cup insulation 10-26 K BW2	0	99999999999999999
290	048864	Floor insulation	0	99999999999999999
300	051116	Rear insulation	0	99999999999999999
310	051119	Left insulation	0	99999999999999999
320	048910	Coasting surface insulation	0	99999999999999999
330	048911	Top insulation	0	99999999999999999
340	050924	Right insulation	0	99999999999999999
350	004096	Cable feed-through 2400 black Ø50	0	99999999999999999
360	051112	Cage nut M8	0	99999999999999999
370	004385	KFE cock	0	99999999999999999
380	048611	Pellet container clamp	0	99999999999999999
400	007632	Microswitch with lever	0	99999999999999999
410	031274	Eyelet M6	0	99999999999999999
415	052484	Platelet flanged nut	0	99999999999999999
420	048870	Cleaning cover, complete	0	99999999999999999
420	050477	Cleaning cover, complete	0	99999999999999999
430	050916	Rear wall	0	99999999999999999
440	021474	Disc 3 DIN134	0	99999999999999999
450	051069	Protective tube for combustion chamber sensor, complete	0	99999999999999999
460	016551	Hexagon nut M3 DIN 934	0	99999999999999999
470	015992	Nut M8 DIN 934 V2 - LogWIN Klassik pellet ready	0	99999999999999999
475	016553	Hexagon nut M8 with flange and gearing	0	99999999999999999
480	031545	Hexagon screw M5x12 DIN 7500 (not ilustrated)	0	99999999999999999

Item no.	Article no.	Description	Serialnumber from	Serialnumber to
500	021504	Hexagon screw M6x45 DIN933	0	99999999999999999
505	016461	Hexagon screw M8x80 DIN 933	0	99999999999999999
520	048975	Clamping rail	0	99999999999999999
530	070323	Plug, 3-pin, black	0	99999999999999999
540	009990	Leg M10 x 40	0	99999999999999999
550	005125	Star handle M12 x 35	0	99999999999999999
560	007626	Thermocouple	0	99999999999999999
570	048914	Door stone	0	99999999999999999
580	050447	Bottom door stone	0	99999999999999999
590	051004	Locking pin	0	99999999999999999
600	016719	Cylinder drilling screw 4.2 x 38 DIN7504	0	99999999999999999

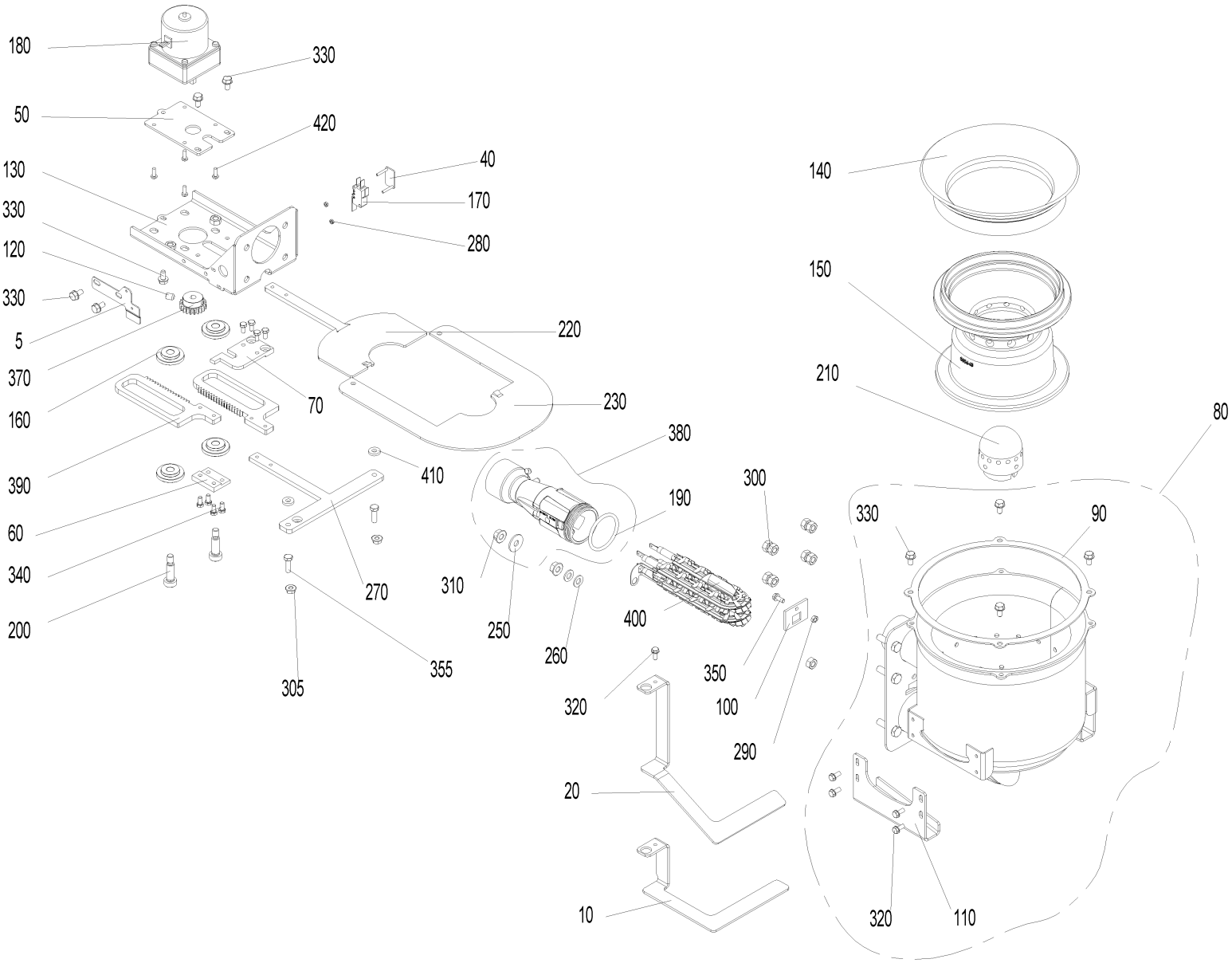
180
330
50
420
130
40
170
330
280
120
330
5
220
370
70
230
160
380
390
410
300
190
60
340
270
310
250
400
200
260
350
305
355
320
100
290
20
10
140
150
210
80
330
90
320
110

Item no.	Article no.	Description	Serialnumber from	Serialnumber to
5	053544	Stop plate	0	99999999999999999
10	051048	Ash stop plate, Klassik, Premium	0	99999999999999999
20	051046	Microswitch fastening	0	99999999999999999
40	051045	Fastened microswitch, complete	0	99999999999999999
50	050632	Bracket mounting plate	0	99999999999999999
60	050649	Mounting plate	0	99999999999999999
70	051042	Mounting plate, top	0	99999999999999999
80	051065	Burner	0	99999999999999999
90	048861	Burner seal	0	99999999999999999
100	048841	Driving rod feed-through	0	99999999999999999
110	048842	Grate plate guide	0	99999999999999999
120	033112	Setscrew M8x10 DIN916	0	99999999999999999
125	053643	Cable - ignition element for BW1, BW2, FireWIN and VarioWIN	0	99999999999999999
130	050639	Shake-out bracket	0	99999999999999999
140	050642	Cone, top part 45°	0	99999999999999999
150	048941	Cone, bottom part for BioWIN2 21/26	0	99999999999999999
160	007125	Bearing for vibrating drive	0	99999999999999999
170	007632	Microswitch with lever	0	99999999999999999
180	012561	Shake-out motor	0	99999999999999999
190	006849	O-ring FPM70 45 x 4	0	99999999999999999
200	017048	Shoulder screw M8 10x25 ISO 7379	0	99999999999999999
210	047774	Primary air pin for BioWIN10-26 FireWIN bis Los9 und PMX 21-26	0	99999999999999999
220	051051	Grate plate, left	0	99999999999999999
230	053539	Grate plate, right	0	99999999999999999
240	021474	Disc 3 DIN134	0	99999999999999999
250	031755	Disc 8 ISO 7093	0	99999999999999999
260	024779	Disc 8 ISO 7089	0	99999999999999999
270	051023	Grate plate scraper	0	99999999999999999
280	016551	Hexagon nut M3 DIN 934	0	99999999999999999
290	017035	Hexagon nut M5 DIN 934	0	99999999999999999
300	031153	Hexagon nut M8 DIN 934	0	99999999999999999
305	016566	Hexagon nut with flange and gearing M6	0	99999999999999999
310	016553	Hexagon nut M8 with flange and gearing	0	99999999999999999
320	031545	Hexagon screw M5x12 DIN 7500 (not ilustrated)	0	99999999999999999
330	031549	Hexagon screw M6x12 DIN 7500	0	99999999999999999
340	016756	Hexagon screw M5x10 DIN 933	0	99999999999999999
355	015471	Hexagon screw M6x20 DIN 933	0	99999999999999999
370	007222	Spur gear M1,5; Z21	0	99999999999999999
380	051067	Venturi nozzle	0	99999999999999999
390	048161	Steering rack BioWin2 10-26	0	99999999999999999
400	055201	Ignition element BioWIN10-26, FireWIN from lot 15, VarioWIN from lot 15 BioWIN XL, LWK	0	99999999999999999
402	053851	de: Zündelement inkl. Kabel beigelegt.	0	99999999999999999
410	051054	Intermediate plate	0	99999999999999999
420	016780	Cylinder screw M4x12 DIN 7985	0	99999999999999999

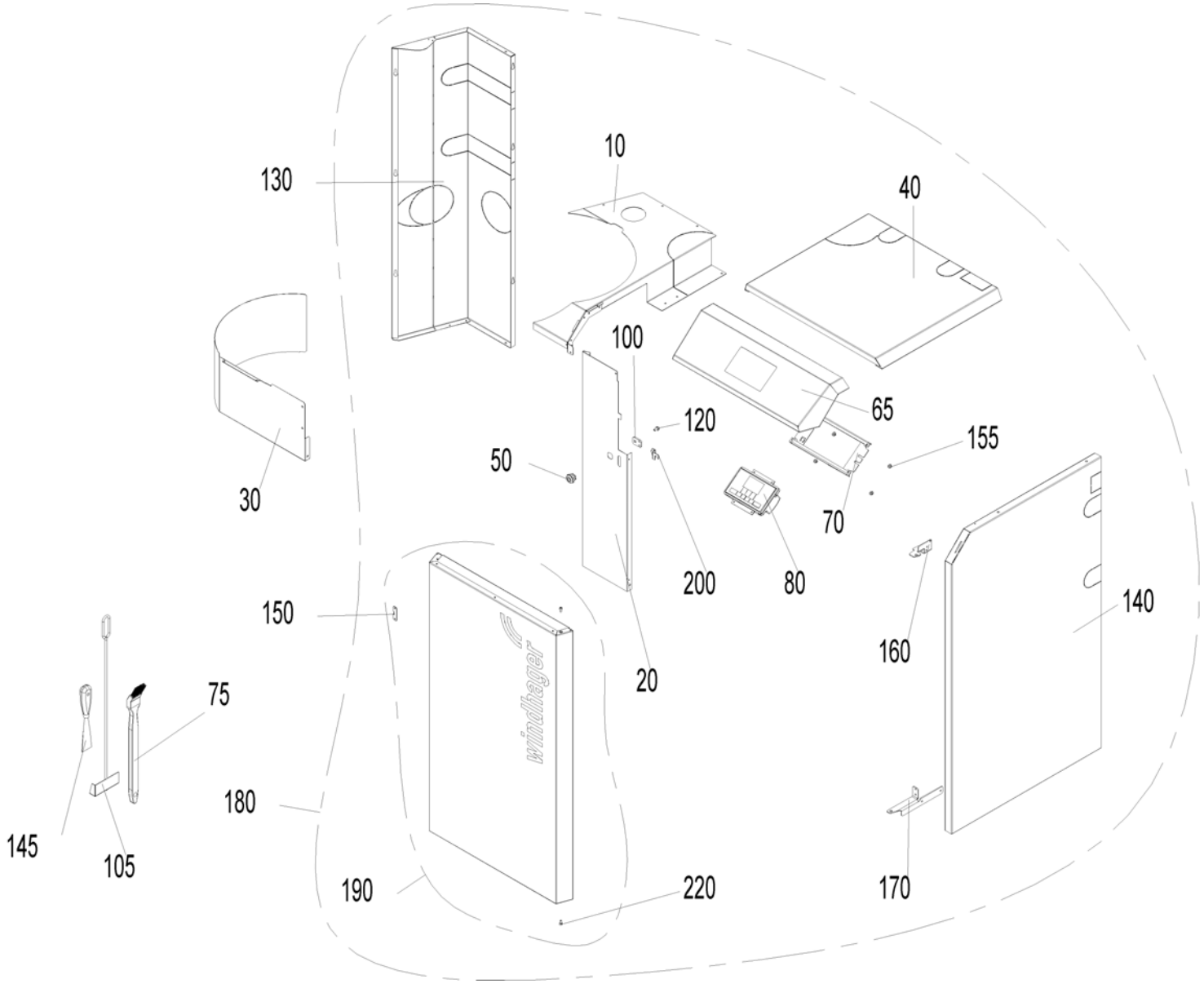
130
10
40
100
65
120
155
50
30
70
200
80
150
140
160
20
75
180
145
105
190
220
170

Item no.	Article no.	Description	Serialnumber from	Serialnumber to
10	051605	Cover, rear left	0	99999999999999999
10	051606	Cover, rear left	0	99999999999999999
20	050876	Cover, left	0	99999999999999999
30	050371	BIO87 Pellet container cover	0	99999999999999999
40	050875	Coasting surface cover	0	99999999999999999
40	050940	Coasting surface cover	0	99999999999999999
50	012256	Turning bolt	0	99999999999999999
65	053001	Front operation InfoWIN	0	99999999999999999
70	051787	InfoWIN holder	0	99999999999999999
75	017090	Cleaning brush	0	99999999999999999
80	009879	InfoWIN plus F4 LWK, BioWIN2	0	99999999999999999
100	047891	Driver	0	99999999999999999
105	072192	Scratcher	0	99999999999999999
110	031545	Hexagon screw M5x12 DIN 7500 (not ilustrated)	0	99999999999999999
120	031549	Hexagon screw M6x12 DIN 7500	0	99999999999999999
130	050878	Left side panel	0	99999999999999999
130	050958	Left side panel	0	99999999999999999
140	050874	Right side panel	0	99999999999999999
140	050932	Right side panel	0	99999999999999999
145	009540	Spatula	0	99999999999999999
150	047893	Clamping plate	0	99999999999999999
155	016565	Hexagon nut M5 with flange and gearing (not illustrated)	0	99999999999999999
160	048988	Door mounting, top	0	99999999999999999
170	048987	Door mounting, bottom	0	99999999999999999
180	050907	BIO88 Cladding complete	0	99999999999999999
180	050908	BIO89 Cladding complete	0	99999999999999999
190	051608	Cladding door	0	99999999999999999
200	047892	Locking plate	0	99999999999999999
210	018139	Cylinder screw 4.2x13 DIN7981SP (not illustrated)	0	99999999999999999
220	004237	Cylinder screw M5x10 ISO 4762 (not illustrated)	0	99999999999999999

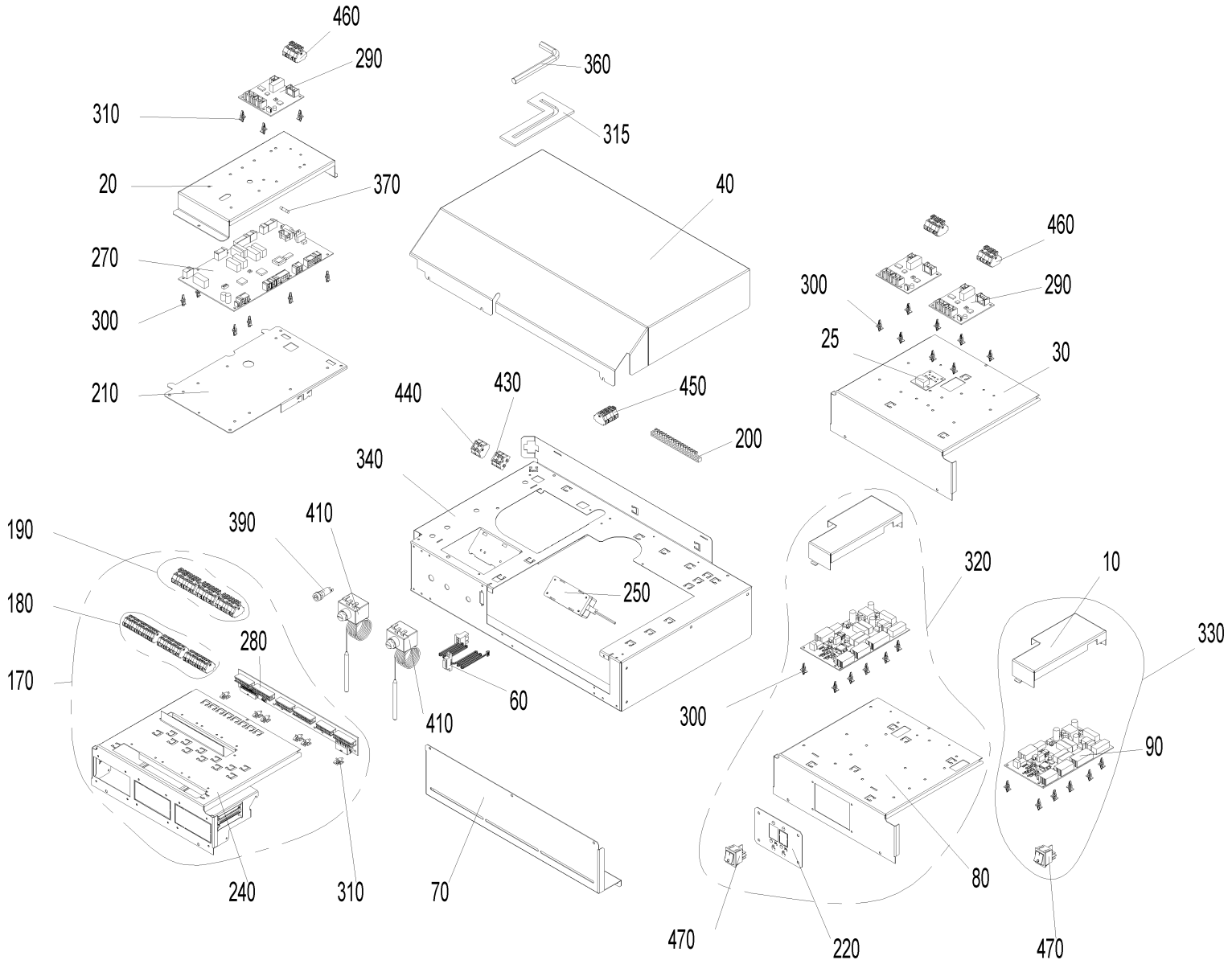
460
290
310
20
370
270
300
210
360
315
40
460
300
290
25
30
440
430
450
200
340
250
190
180
170
390
410
280
60
410
240
310
70
320
10
330
300
90
80
470
220
470

Item no.	Article no.	Description	Serialnumber from	Serialnumber to
10	048750	BUML TTL 2Z cover	0	99999999999999999
20	048955	PCB cover	0	99999999999999999
25	012012	LON connection diagram	0	99999999999999999
30	051382	REG000BW2 External control system cover	0	99999999999999999
40	048618	Control panel cover	0	99999999999999999
60	050970	Ribbon cable, Lon	0	99999999999999999
70	048902	Retaining plate	0	99999999999999999
80	048613	Retaining bracket, REG	0	99999999999999999
90	009767	BUML TTL 2Z interface	0	99999999999999999
100	002059	Power supply cable (not illustrated)	0	99999999999999999
110	050971	Power supply cable OT (not illustrated)	0	99999999999999999
120	043586	Draught fan cable (not illustrated)	0	99999999999999999
130	003719	TTL cable (not illustrated)	0	99999999999999999
140	040333	Wiring harness 12 V (not illustrated)	0	99999999999999999
150	040335	Wiring harness 230 V (not illustrated)	0	99999999999999999
160	040334	Wiring harness AAT HFR (not illustrated)	0	99999999999999999
170	050910	MESBW2 Cable harness	0	99999999999999999
180	051415	Cable harness MES extra-low voltage 12 V	0	99999999999999999
190	051414	Cable harness MES low voltage 230 V	0	99999999999999999
200	009928	Terminal bar	0	99999999999999999
210	050959	Bracket fireing automat	0	99999999999999999
220	048952	Rocker switch bracket	0	99999999999999999
230	018190	Oval-head screw 3.2x16 (not illustrated)	0	99999999999999999
240	051390	Module guide complete	0	99999999999999999
250	051645	Power supply unit 12V	0	99999999999999999
260	005784	Pin connector (not illustrated)	0	99999999999999999
270	011990	PCB, FMP BW2	0	99999999999999999
280	050996	MES PCB	0	99999999999999999
290	011994	PCB board, FMO-J	0	99999999999999999
300	007609	PCB holder	0	99999999999999999
310	007549	PCB holder, Richco	0	99999999999999999
315	051766	Position hexagon pin screwdriver	0	99999999999999999
320	050912	REG 021	0	99999999999999999
330	050913	REG 024	0	99999999999999999
340	048605	Control panel, floor	0	99999999999999999
360	027391	Hexagon pin screwdriver 10 mm DIN 911	0	99999999999999999
370	006900	Fuse 1 A T 5x20 ceramic tube	0	99999999999999999
380	003228	6.3A fuse (not illustrated)	0	99999999999999999
390	003663	Fuse holder	0	99999999999999999
400	007629	Immersion sensor PT 1000 (not illustrated)	0	99999999999999999
405	502186	MES009M Immersion sensor	0	99999999999999999
410	005672	Thermostat LS1+100-6U	0	99999999999999999
415	003208	Grommet 10x17.5x1.2	0	99999999999999999
430	006833	Wago terminal block 261; 4-pin "12V GND"	0	99999999999999999
440	006834	Wago terminal block 261; 4-pin "safety 1-4"	0	99999999999999999
450	007656	Wago terminal block 261; 6-pin	0	99999999999999999
460	010047	Wago terminal block 261; 6-pin extra PCB	0	99999999999999999
470	005563	Rocker switch SW/GR 0-1	0	99999999999999999
480	018140	Cylinder screw 4.2x13 DIN7981ST (not illustrated)	0	99999999999999999

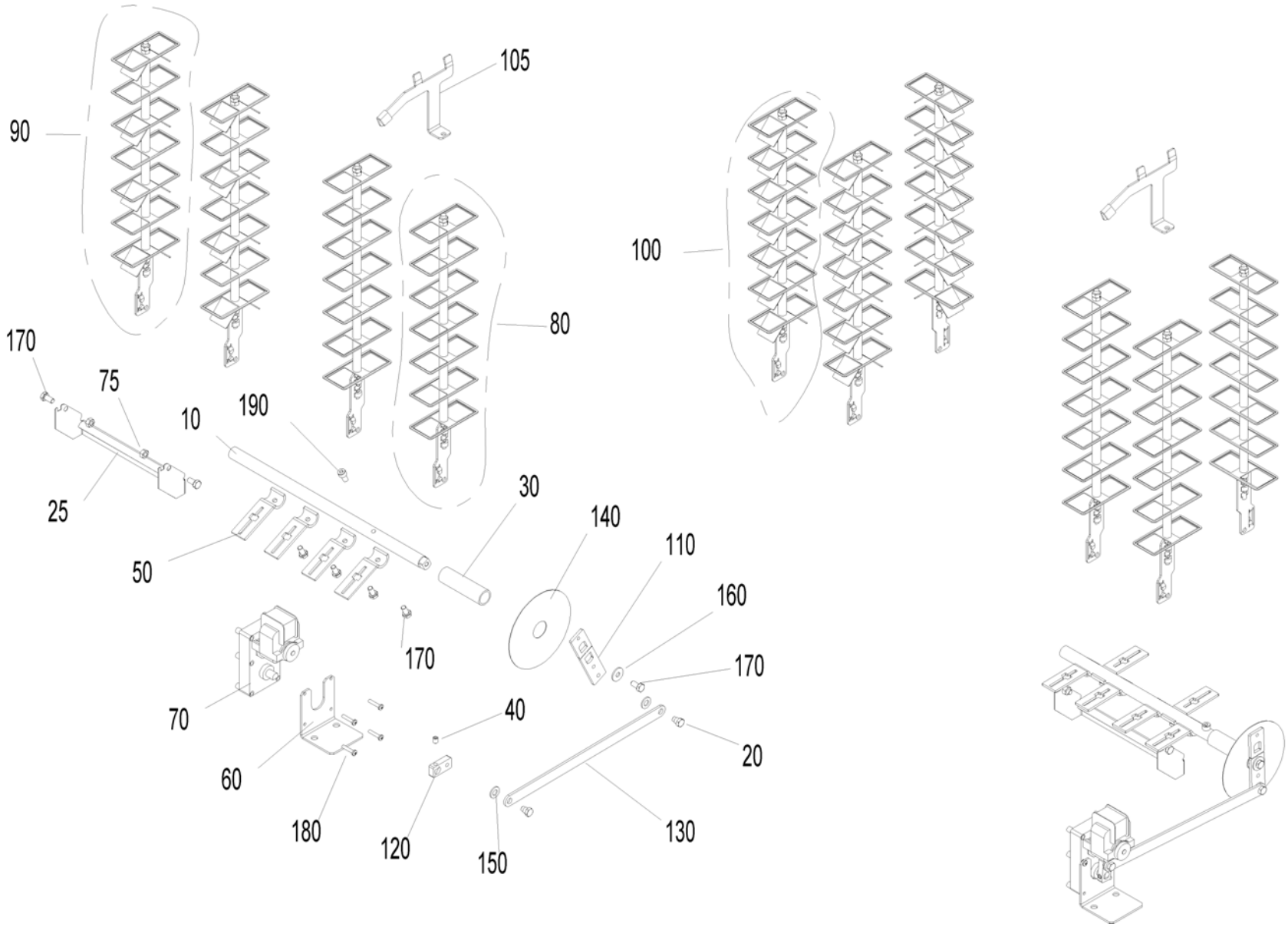
90
105
80
100
170
75
10
190
25
50
30
140
110
160
170
170
70
40
20
60
180
120
150
130

Item no.	Article no.	Description	Serialnumber from	Serialnumber to
10	048882	Axle heating surface BW2 10-26	0	99999999999999999
20	012502	Collar screw	0	99999999999999999
25	051624	Ash sheet	0	99999999999999999
30	048980	Distance rod	0	99999999999999999
40	033112	Setscrew M8x10 DIN916	0	99999999999999999
50	051547	Lever for cleaning heating surfaces	0	99999999999999999
60	051121	L-bracket, motor HFR	0	99999999999999999
70	044665	Motor	0	99999999999999999
75	015992	Nut M8 DIN 934 V2 - LogWIN Klassik pellet ready	0	99999999999999999
80	051609	Clearer flat	0	99999999999999999
90	051610	Clearer flat with turbulator	0	99999999999999999
100	051611	Clearer flat with turbulator	0	99999999999999999
105	051076	Cleaning plate for combustion chamber	0	99999999999999999
110	048884	Shaker lever 1	0	99999999999999999
120	048885	Shaker lever 2	0	99999999999999999
130	051367	Shaker lever 3	0	99999999999999999
140	051122	Disc	0	99999999999999999
150	024780	Disc 10 ISO7089	0	99999999999999999
160	031755	Disc 8 ISO 7093	0	99999999999999999
170	016721	Hexagon screw M8x16 DIN 933	0	99999999999999999
180	016837	Cylinder screw M5x25 ISO 7045	0	99999999999999999
190	016773	Cylinder screw M8x16 ISO 4762	0	99999999999999999

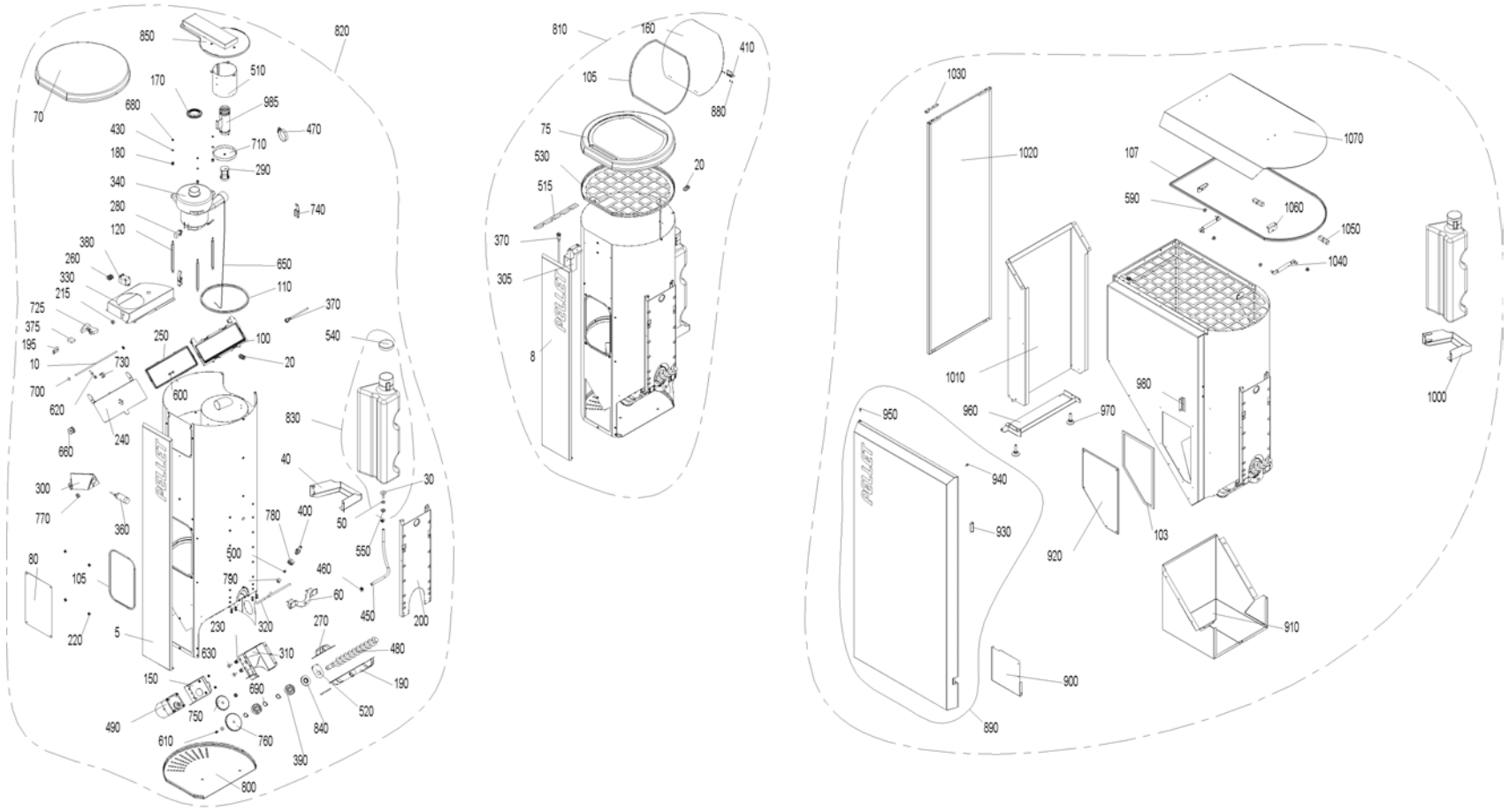
850
820
70
510
170
985
680
470
430
710
180
290
340
740
280
120
380
650
260
330
110
215
370
725
375
250
100
540
195
730
20
10
700
600
620
240
830
660
40
30
300
400
50
770
360
780
550
80
500
460
105
790
60
450
200
220
5
230
320
270
480
630
310
150
190
690
520
490
750
840
610
760
390
800
810
160
410
105
880
75
530
20
515
370
305
8
1030
1020
107
1070
590
1060
1050
1040
1010
980
960
970
1000
950
940
930
920
103
910
900
890

Item no.	Article no.	Description	Serialnumber from	Serialnumber to
5	051749	PB cover plate, grey	0	99999999999999999
8	051758	PB Klassik cover plate, grey	0	99999999999999999
10	042452	Feed axle	0	99999999999999999
20	006340	Mount connections PG9	0	99999999999999999
30	006877	Water connection	0	99999999999999999
40	051107	Water tank support	0	99999999999999999
50	006851	Support plate, motor	0	99999999999999999
60	048974	Fastening bracket	0	99999999999999999
70	050884	Pellet container cover	0	99999999999999999
75	051000	Pellet container cover Klassik	0	99999999999999999
80	050868	Cover reserve supply	0	99999999999999999
100	031254	Seal frame	0	99999999999999999
103	046665	Container seal	0	99999999999999999
105	053465	Reserve supply container seal	0	99999999999999999
107	053467	Seal profile reserve supply container 200 kg	0	99999999999999999
110	042232	Seal section	0	99999999999999999
120	031256	Distance bolt	0	99999999999999999
130	051386	Cheese head screw M5x10 Taptite	0	99999999999999999
140	051387	Cheese head screw M5x10 Taptite, grey	0	99999999999999999
150	051114	Flange, auger motor	0	99999999999999999
160	051001	Filling cover	0	99999999999999999
170	031253	Blower seal	0	99999999999999999
180	009559	Rubber grommet DK 6-9-12-7	0	99999999999999999
190	053540	Half-collar auger tube	0	99999999999999999
195	005077	Bracket	0	99999999999999999
200	048976	Retaining bracket, pellet tank	0	99999999999999999
210	045048	Cable feed with relay	0	99999999999999999
215	009542	Cable feed-through	0	99999999999999999
220	051388	Cage nut M5	0	99999999999999999
230	051112	Cage nut M8	0	99999999999999999
240	045955	Receptacle flap	0	99999999999999999
250	031257	Flap seal	0	99999999999999999
260	000965	Terminal, 3-pin	0	99999999999999999
270	048967	Clamp collar	0	99999999999999999
280	006859	Carbon brushes for blower motor	0	99999999999999999
290	042035	Piston	0	99999999999999999
300	048970	Proximity switch bracket	0	99999999999999999
305	051786	Proximity switch bracket lid	0	99999999999999999
310	048891	Auger motor bracket	0	99999999999999999
320	050867	Back-burn safeguard lead	0	99999999999999999
330	050866	Air duct	0	99999999999999999
340	044667	Blower motor 122151-12 for feed Conversion instructions for use with PMX 15-26 are enclosed! for BioWIN 10-26, PMX,BioWIN XL 35-6	0	99999999999999999
360	006821	Proximity switch, capacitive	0	99999999999999999
370	006832	Proximity switch M12, inductive	0	99999999999999999
375	005026	OKE9281 Cable protection plate	0	99999999999999999
380	005067	BW2 Relay 30A 250V	0	99999999999999999
390	012499	Grooved ball bearing	0	99999999999999999
400	042510	Burn-back protection completely assembled for PMX, BioWIN 10-26	0	99999999999999999
410	050990	Hinge M345	0	99999999999999999
420	018058	U-washer	0	99999999999999999
430	018309	Disc 5 DIN134	0	99999999999999999

Item no.	Article no.	Description	Serialnumber from	Serialnumber to
440	031753	Disc 6 ISO 7093	0	99999999999999999
450	008915	Hose 7x2	0	99999999999999999
460	006874	Hose clip ABA 11	0	99999999999999999
470	006875	Hose clip 40-60	0	99999999999999999
480	051544	Auger	0	99999999999999999
490	050901	Auger motor SPG	0	99999999999999999
500	006378	Cutting ring DL8 07-151	0	99999999999999999
510	045951	Partition plate	0	99999999999999999
510	052480	Partition plate	0	99999999999999999
515	051790	Protection plate for cable BW2	0	99999999999999999
520	048971	Protection plate	0	99999999999999999
530	051604	Protection plate, top, bottom	0	99999999999999999
540	051397	Protection cover GPN 690	0	99999999999999999
550	016567	Hexagon nut M10 with flange and gearing (not illustrated)	0	99999999999999999
560	016565	Hexagon nut M5 with flange and gearing (not illustrated)	0	99999999999999999
570	016586	Hexagon nut M5 DIN 934	0	99999999999999999
580	016594	Hexagon nut M6 DIN 934	0	99999999999999999
590	016553	Hexagon nut M8 with flange and gearing	0	99999999999999999
600	031545	Hexagon screw M5x12 DIN 7500 (not ilustrated)	0	99999999999999999
610	017051	Hexagon screw M6x12 DIN 933 (not illustrated)	0	99999999999999999
620	021504	Hexagon screw M6x45 DIN933	0	99999999999999999
630	015134	Hexagon screw M8x16 DIN 933	0	99999999999999999
640	017086	Hexagon screw M8x20 DIN 933 (not illustrated)	0	99999999999999999
650	031258	Cable	0	99999999999999999
660	031261	Cable pulley	0	99999999999999999
670	031096	Countersinking screw M4x20 DIN965 gv KS (not illustrated)	0	99999999999999999
680	016727	Lock nut M5	0	99999999999999999
690	016171	Locking ring Ø20x1.2	0	99999999999999999
700	006897	Lock washer Ø 6	0	99999999999999999
710	045949	Sieve with eye	0	99999999999999999
725	005043	Base for relay	0	99999999999999999
730	045952	Clamping piece for cable	0	99999999999999999
740	009546	Spring lock	0	99999999999999999
750	050869	Spur gear M2 Z36	0	99999999999999999
760	045771	Spur gear M2 Z45	0	99999999999999999
770	003208	Grommet 10x17.5x1.2	0	99999999999999999
780	013749	Union nut 3/8"	0	99999999999999999
790	006351	Union nut ML8 GV	0	99999999999999999
800	048986	Pellet container cladding	0	99999999999999999
810	050887	BIO91 Reserve supply container Klassik, without motor	0	99999999999999999
820	050888	BIO92 Reserve supply container Premium, without motor	0	99999999999999999
830	050379	Water tank	0	99999999999999999
840	048903	Shaft seal ring DIN 3760AS AD52 ID20	0	99999999999999999
850	045946	Cyclone cover for BioWIN2 to 1.02.2015	0	99999999999999999
850	053466	Cyclone cover	0	99999999999999999
860	019836	Cylinder screw 2.9x16 (not illustrated)	0	99999999999999999
870	018139	Cylinder screw 4.2x13 DIN7981SP (not illustrated)	0	99999999999999999
880	016768	Cylinder screw M3x5	0	99999999999999999
890	052474	Cladding door	0	99999999999999999
900	051779	Cover	0	99999999999999999
910	051755	CoverPB BioWIN2	0	99999999999999999

Item no.	Article no.	Description	Serialnumber from	Serialnumber to
920	051754	Maintenance cover BioWIN2	0	99999999999999999
930	001760	Magnetic lock, black - VW, LWP18-50, LWK	0	99999999999999999
940	000299	Silicone buffer	0	99999999999999999
950	004237	Cylinder screw M5x10 ISO 4762 (not illustrated)	0	99999999999999999
960	051753	Door mounting, bottom	0	99999999999999999
970	009990	Leg M10 x 40	0	99999999999999999
980	051773	Magnetic sheet	0	99999999999999999
985	052482	Suction pipe	0	99999999999999999
990	051775	BIO83 side panel	0	99999999999999999
990	051776	BIO82 side panel	0	99999999999999999
1000	051771	Water tank support	0	99999999999999999
1010	051614	Pedestal	0	99999999999999999
1020	051781	Left side panel, grey	0	99999999999999999
1030	051752	Door mounting, top	0	99999999999999999
1040	012600	Gas spring 4534DS 0100 N	0	99999999999999999
1050	044802	Southco hinge	0	99999999999999999
1060	051751	L-bracket	0	99999999999999999
1070	051783	Pellet container cover	0	99999999999999999

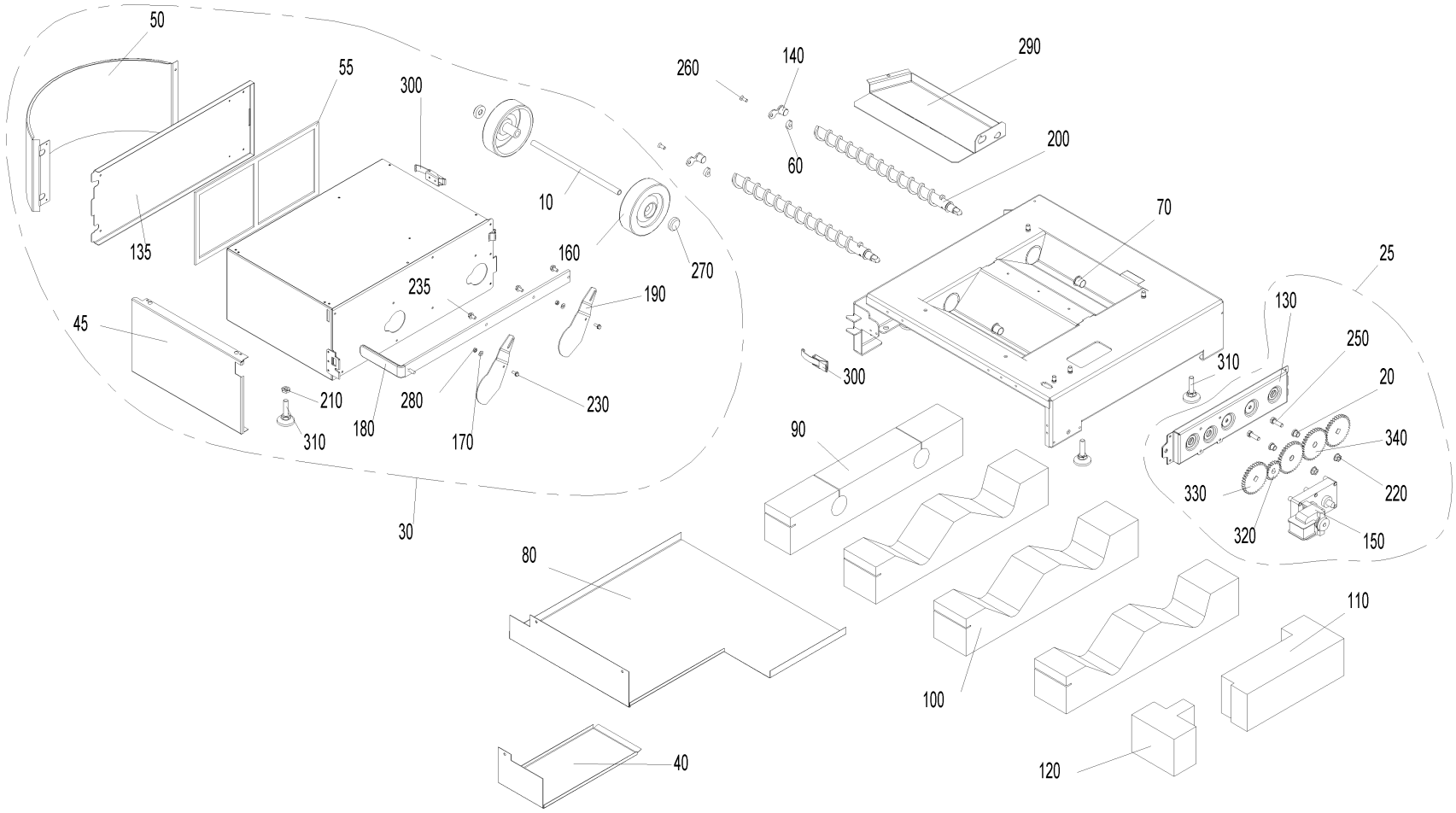
50
55
300
135
10
160
270
235
190
45
210
310
180
280
170
230
30
260
140
290
60
200
70
300
310
25
130
250
20
340
330
220
320
150
90
80
100
110
40
120

Item no.	Article no.	Description	Serialnumber from	Serialnumber to
10	051379	Ash box axle	0	99999999999999999
20	006745	Ash conveyor bearing bush	0	99999999999999999
25	054418	Ash removal, completely pre- mounted, BioWIN2	0	99999999999999999
30	051262	BIO90 Ash box, cpl	0	99999999999999999
40	051125	Cover for ash conveyor motor	0	99999999999999999
45	051633	Ash box lid	0	99999999999999999
50	051637	Ash box lid curve	0	99999999999999999
55	046665	Container seal	0	99999999999999999
60	048573	Distance	0	99999999999999999
70	012508	Friction bearing with connector	0	99999999999999999
80	051124	Cup insulation	0	99999999999999999
90	051126	Ash pipe insulation	0	99999999999999999
100	051127	Ash chamfer insulation	0	99999999999999999
110	051128	Motor insulation, rear	0	99999999999999999
120	051129	Motor insulation, front	0	99999999999999999
130	048572	Ash conveyor bracket	0	99999999999999999
135	051635	Ash box flap	0	99999999999999999
140	051120	Auger bearing	0	99999999999999999
150	044665	Motor	0	99999999999999999
160	006888	Wheel AG 125-12	0	99999999999999999
170	018309	Disc 5 DIN134	0	99999999999999999
180	051389	Ash box scraper	0	99999999999999999
190	050686	Sliding plate	0	99999999999999999
200	051542	Auger	0	99999999999999999
210	031156	Hexagon nut M10 DIN 439	0	99999999999999999
220	016553	Hexagon nut M8 with flange and gearing	0	99999999999999999
230	031545	Hexagon screw M5x12 DIN 7500 (not ilustrated)	0	99999999999999999
235	031549	Hexagon screw M6x12 DIN 7500	0	99999999999999999
240	017086	Hexagon screw M8x20 DIN 933 (not illustrated)	0	99999999999999999
250	017191	Hexagon screw M8x25 DIN 933	0	99999999999999999
260	016863	Countersinking screw M6x16	0	99999999999999999
270	006889	Washer Ø12	0	99999999999999999
280	016727	Lock nut M5	0	99999999999999999
290	050692	Ash box base	0	99999999999999999
300	009546	Spring lock	0	99999999999999999
310	009990	Leg M10 x 40	0	99999999999999999
320	047543	Spur gear M2 Z20	0	99999999999999999
330	050869	Spur gear M2 Z36	0	99999999999999999
340	048566	Spur gear M2 Z36 Ø12	0	99999999999999999

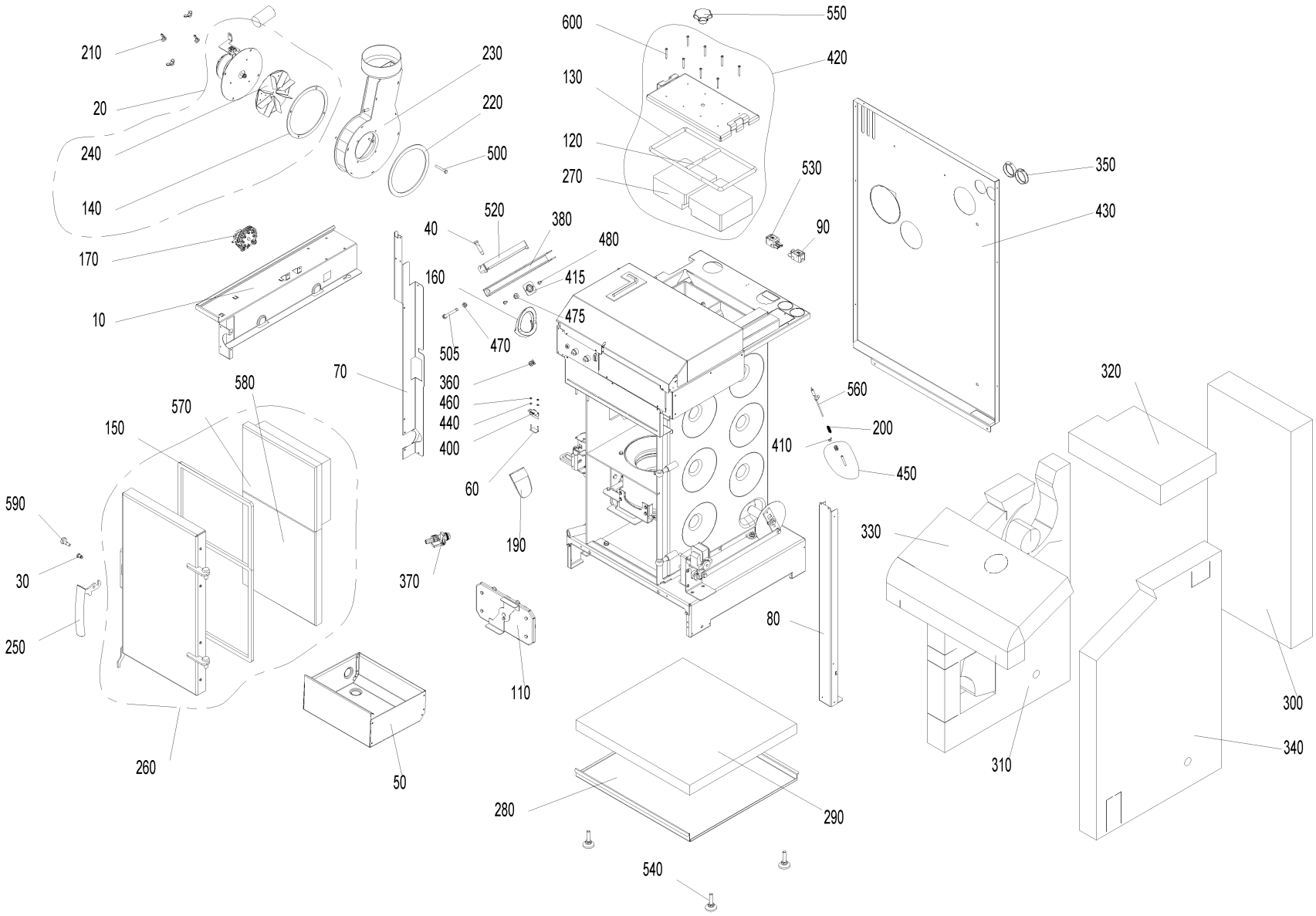
210
20
240
140
170
10
230
220
500
520
40
380
480
160
415
475
505
470
70
360
460
440
400
60
190
370
580
570
150
590
30
250
260
50
110
600
550
420
130
120
270
530
90
350
430
560
200
410
450
320
330
80
310
300
340
280
290
540

Item no.	Article no.	Description	Serialnumber from	Serialnumber to
10	050918	Cover plate	0	99999999999999999
20	053010	Flue gas blower	0	99999999999999999
30	048881	Axle for door handle CK45	0	99999999999999999
40	013813	Collar screw	0	99999999999999999
50	048928	Ash pan	0	99999999999999999
60	051045	Fastened microswitch, complete	0	99999999999999999
70	051109	Cover, left	0	99999999999999999
80	048609	Cover, right	0	99999999999999999
90	070324	Socket, 3-pin, black	0	99999999999999999
110	051056	Coasting surface cover, complete	0	99999999999999999
120	051040	Sealing cord, short	0	99999999999999999
120	051041	Sealing cord, short	0	99999999999999999
130	051017	Sealing cord for cleaning cover	0	99999999999999999
130	051034	Sealing cord for cleaning cover	0	99999999999999999
140	051006	Blower box seal	0	99999999999999999
150	048916	Heating door seal	0	99999999999999999
160	048926	Auger tube seal	0	99999999999999999
170	045404	Differential pressure watchdog	0	99999999999999999
190	048921	Down chute	0	99999999999999999
200	050647	Combustion chamber sensor spring	0	99999999999999999
210	019410	Wing nut M6	0	99999999999999999
220	051005	Blower seal	0	99999999999999999
230	053234	Blower box for BioWIN102-262	0	99999999999999999
240	052951	Blower wheel Ø160 x 25 for BioWIN2 102 - 262	0	99999999999999999
250	007480	Boiler handle	0	99999999999999999
260	051545	Heating door cpl. mounted	0	99999999999999999
270	050636	Insulating stone for cleaning cover	0	99999999999999999
270	051007	Insulating stone for cleaning cover	0	99999999999999999
280	048863	Cup insulation 10-26 K BW2	0	99999999999999999
290	048864	Floor insulation	0	99999999999999999
300	051116	Rear insulation	0	99999999999999999
310	051119	Left insulation	0	99999999999999999
320	048910	Coasting surface insulation	0	99999999999999999
330	048911	Top insulation	0	99999999999999999
340	050924	Right insulation	0	99999999999999999
350	004096	Cable feed-through 2400 black Ø50	0	99999999999999999
360	051112	Cage nut M8	0	99999999999999999
370	004385	KFE cock	0	99999999999999999
380	048611	Pellet container clamp	0	99999999999999999
400	007632	Microswitch with lever	0	99999999999999999
410	031274	Eyelet M6	0	99999999999999999
415	052484	Platelet flanged nut	0	99999999999999999
420	048870	Cleaning cover, complete	0	99999999999999999
420	050477	Cleaning cover, complete	0	99999999999999999
430	050916	Rear wall	0	99999999999999999
440	021474	Disc 3 DIN134	0	99999999999999999
450	051069	Protective tube for combustion chamber sensor, complete	0	99999999999999999
460	016551	Hexagon nut M3 DIN 934	0	99999999999999999
470	015992	Nut M8 DIN 934 V2 - LogWIN Klassik pellet ready	0	99999999999999999
475	016553	Hexagon nut M8 with flange and gearing	0	99999999999999999
480	031545	Hexagon screw M5x12 DIN 7500 (not ilustrated)	0	99999999999999999

Item no.	Article no.	Description	Serialnumber from	Serialnumber to
500	021504	Hexagon screw M6x45 DIN933	0	99999999999999999
505	016461	Hexagon screw M8x80 DIN 933	0	99999999999999999
520	048975	Clamping rail	0	99999999999999999
530	070323	Plug, 3-pin, black	0	99999999999999999
540	009990	Leg M10 x 40	0	99999999999999999
550	005125	Star handle M12 x 35	0	99999999999999999
560	007626	Thermocouple	0	99999999999999999
570	048914	Door stone	0	99999999999999999
580	050447	Bottom door stone	0	99999999999999999
590	051004	Locking pin	0	99999999999999999
600	016719	Cylinder drilling screw 4.2 x 38 DIN7504	0	99999999999999999

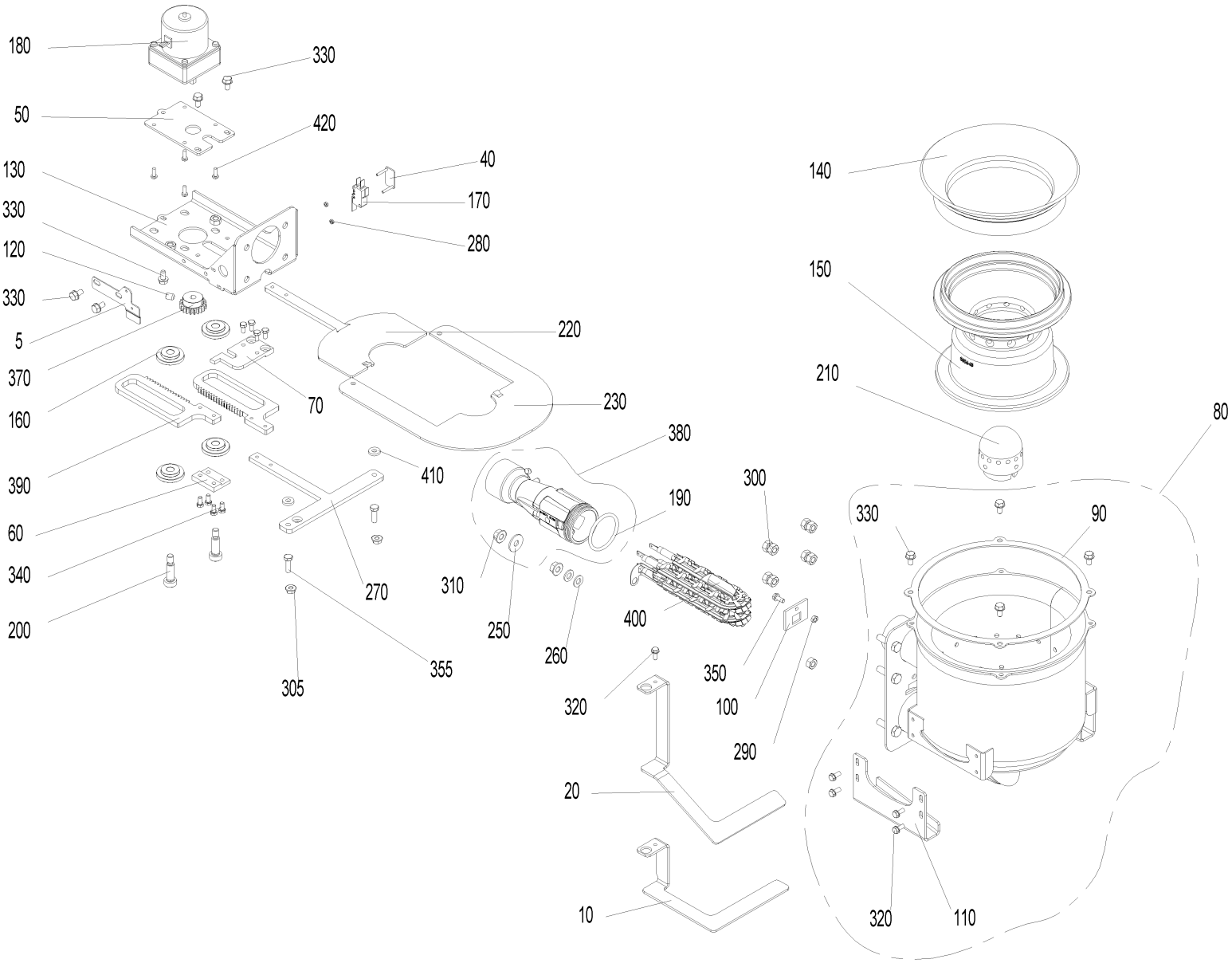
180
330
50
420
130
40
170
330
280
120
330
5
220
370
70
230
160
380
390
410
300
190
60
340
270
310
250
400
200
260
350
305
355
320
100
290
20
10
140
150
210
80
330
90
320
110

Item no.	Article no.	Description	Serialnumber from	Serialnumber to
5	053544	Stop plate	0	99999999999999999
10	051048	Ash stop plate, Klassik, Premium	0	99999999999999999
20	051046	Microswitch fastening	0	99999999999999999
40	051045	Fastened microswitch, complete	0	99999999999999999
50	050632	Bracket mounting plate	0	99999999999999999
60	050649	Mounting plate	0	99999999999999999
70	051042	Mounting plate, top	0	99999999999999999
80	051065	Burner	0	99999999999999999
90	048861	Burner seal	0	99999999999999999
100	048841	Driving rod feed-through	0	99999999999999999
110	048842	Grate plate guide	0	99999999999999999
120	033112	Setscrew M8x10 DIN916	0	99999999999999999
125	053643	Cable - ignition element for BW1, BW2, FireWIN and VarioWIN	0	99999999999999999
130	050639	Shake-out bracket	0	99999999999999999
140	050642	Cone, top part 45°	0	99999999999999999
150	048941	Cone, bottom part for BioWIN2 21/26	0	99999999999999999
160	007125	Bearing for vibrating drive	0	99999999999999999
170	007632	Microswitch with lever	0	99999999999999999
180	012561	Shake-out motor	0	99999999999999999
190	006849	O-ring FPM70 45 x 4	0	99999999999999999
200	017048	Shoulder screw M8 10x25 ISO 7379	0	99999999999999999
210	047774	Primary air pin for BioWIN10-26 FireWIN bis Los9 und PMX 21-26	0	99999999999999999
220	051051	Grate plate, left	0	99999999999999999
230	053539	Grate plate, right	0	99999999999999999
240	021474	Disc 3 DIN134	0	99999999999999999
250	031755	Disc 8 ISO 7093	0	99999999999999999
260	024779	Disc 8 ISO 7089	0	99999999999999999
270	051023	Grate plate scraper	0	99999999999999999
280	016551	Hexagon nut M3 DIN 934	0	99999999999999999
290	017035	Hexagon nut M5 DIN 934	0	99999999999999999
300	031153	Hexagon nut M8 DIN 934	0	99999999999999999
305	016566	Hexagon nut with flange and gearing M6	0	99999999999999999
310	016553	Hexagon nut M8 with flange and gearing	0	99999999999999999
320	031545	Hexagon screw M5x12 DIN 7500 (not ilustrated)	0	99999999999999999
330	031549	Hexagon screw M6x12 DIN 7500	0	99999999999999999
340	016756	Hexagon screw M5x10 DIN 933	0	99999999999999999
355	015471	Hexagon screw M6x20 DIN 933	0	99999999999999999
370	007222	Spur gear M1,5; Z21	0	99999999999999999
380	051067	Venturi nozzle	0	99999999999999999
390	048161	Steering rack BioWin2 10-26	0	99999999999999999
400	055201	Ignition element BioWIN10-26, FireWIN from lot 15, VarioWIN from lot 15 BioWIN XL, LWK	0	99999999999999999
402	053851	de: Zündelement inkl. Kabel beigelegt.	0	99999999999999999
410	051054	Intermediate plate	0	99999999999999999
420	016780	Cylinder screw M4x12 DIN 7985	0	99999999999999999

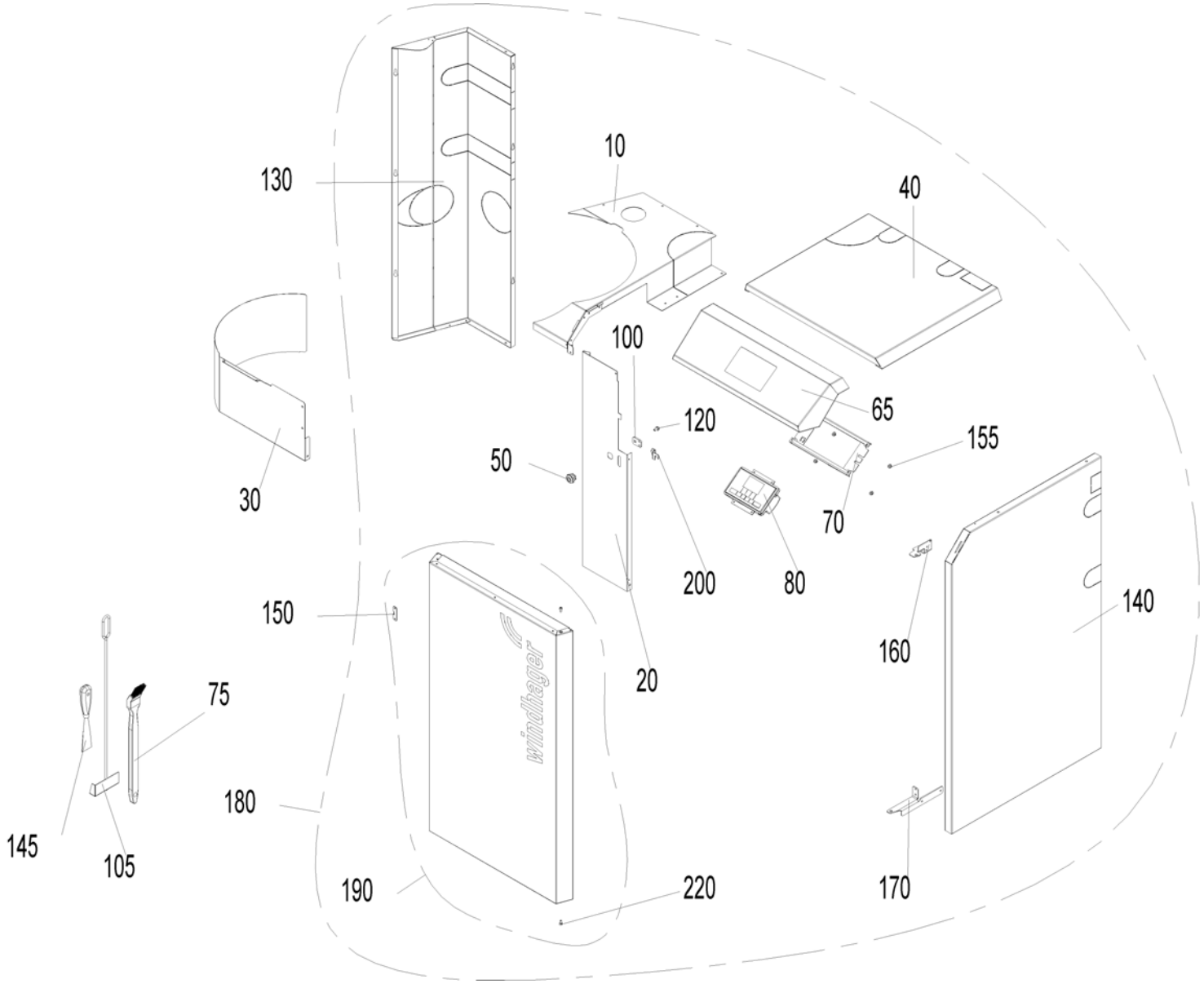
130
10
40
100
65
120
155
50
30
70
200
80
150
140
160
20
75
180
145
105
190
220
170

Item no.	Article no.	Description	Serialnumber from	Serialnumber to
10	051605	Cover, rear left	0	99999999999999999
10	051606	Cover, rear left	0	99999999999999999
20	050876	Cover, left	0	99999999999999999
30	050371	BIO87 Pellet container cover	0	99999999999999999
40	050875	Coasting surface cover	0	99999999999999999
40	050940	Coasting surface cover	0	99999999999999999
50	012256	Turning bolt	0	99999999999999999
65	053001	Front operation InfoWIN	0	99999999999999999
70	051787	InfoWIN holder	0	99999999999999999
75	017090	Cleaning brush	0	99999999999999999
80	009879	InfoWIN plus F4 LWK, BioWIN2	0	99999999999999999
100	047891	Driver	0	99999999999999999
105	072192	Scratcher	0	99999999999999999
110	031545	Hexagon screw M5x12 DIN 7500 (not ilustrated)	0	99999999999999999
120	031549	Hexagon screw M6x12 DIN 7500	0	99999999999999999
130	050878	Left side panel	0	99999999999999999
130	050958	Left side panel	0	99999999999999999
140	050874	Right side panel	0	99999999999999999
140	050932	Right side panel	0	99999999999999999
145	009540	Spatula	0	99999999999999999
150	047893	Clamping plate	0	99999999999999999
155	016565	Hexagon nut M5 with flange and gearing (not illustrated)	0	99999999999999999
160	048988	Door mounting, top	0	99999999999999999
170	048987	Door mounting, bottom	0	99999999999999999
180	050907	BIO88 Cladding complete	0	99999999999999999
180	050908	BIO89 Cladding complete	0	99999999999999999
190	051608	Cladding door	0	99999999999999999
200	047892	Locking plate	0	99999999999999999
210	018139	Cylinder screw 4.2x13 DIN7981SP (not illustrated)	0	99999999999999999
220	004237	Cylinder screw M5x10 ISO 4762 (not illustrated)	0	99999999999999999

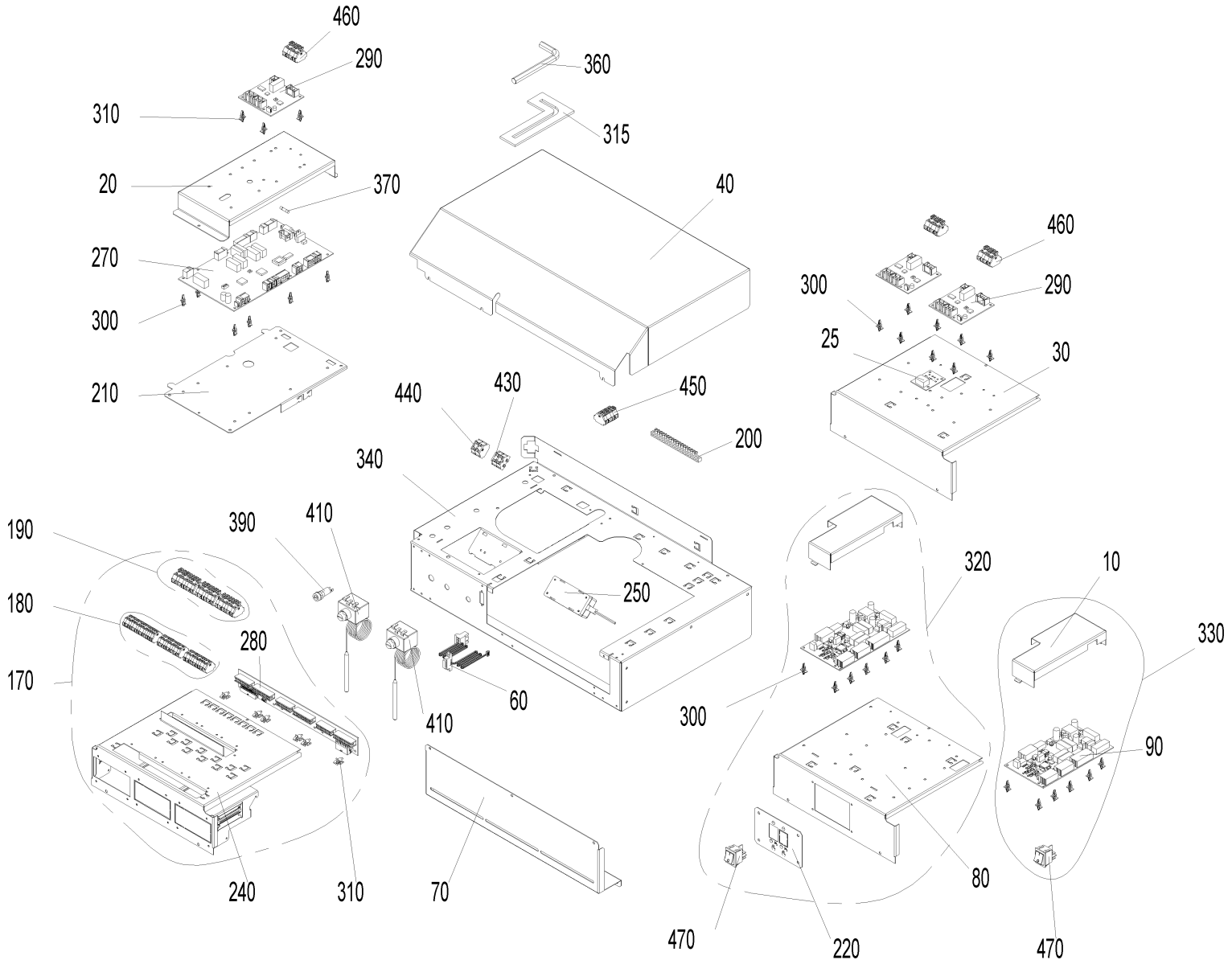
460
290
310
20
370
270
300
210
360
315
40
460
300
290
25
30
440
430
450
200
340
250
190
180
170
390
410
280
60
410
240
310
70
320
10
330
300
90
80
470
220
470

Item no.	Article no.	Description	Serialnumber from	Serialnumber to
10	048750	BUML TTL 2Z cover	0	99999999999999999
20	048955	PCB cover	0	99999999999999999
25	012012	LON connection diagram	0	99999999999999999
30	051382	REG000BW2 External control system cover	0	99999999999999999
40	048618	Control panel cover	0	99999999999999999
60	050970	Ribbon cable, Lon	0	99999999999999999
70	048902	Retaining plate	0	99999999999999999
80	048613	Retaining bracket, REG	0	99999999999999999
90	009767	BUML TTL 2Z interface	0	99999999999999999
100	002059	Power supply cable (not illustrated)	0	99999999999999999
110	050971	Power supply cable OT (not illustrated)	0	99999999999999999
120	043586	Draught fan cable (not illustrated)	0	99999999999999999
130	003719	TTL cable (not illustrated)	0	99999999999999999
140	040333	Wiring harness 12 V (not illustrated)	0	99999999999999999
150	040335	Wiring harness 230 V (not illustrated)	0	99999999999999999
160	040334	Wiring harness AAT HFR (not illustrated)	0	99999999999999999
170	050910	MESBW2 Cable harness	0	99999999999999999
180	051415	Cable harness MES extra-low voltage 12 V	0	99999999999999999
190	051414	Cable harness MES low voltage 230 V	0	99999999999999999
200	009928	Terminal bar	0	99999999999999999
210	050959	Bracket fireing automat	0	99999999999999999
220	048952	Rocker switch bracket	0	99999999999999999
230	018190	Oval-head screw 3.2x16 (not illustrated)	0	99999999999999999
240	051390	Module guide complete	0	99999999999999999
250	051645	Power supply unit 12V	0	99999999999999999
260	005784	Pin connector (not illustrated)	0	99999999999999999
270	011990	PCB, FMP BW2	0	99999999999999999
280	050996	MES PCB	0	99999999999999999
290	011994	PCB board, FMO-J	0	99999999999999999
300	007609	PCB holder	0	99999999999999999
310	007549	PCB holder, Richco	0	99999999999999999
315	051766	Position hexagon pin screwdriver	0	99999999999999999
320	050912	REG 021	0	99999999999999999
330	050913	REG 024	0	99999999999999999
340	048605	Control panel, floor	0	99999999999999999
360	027391	Hexagon pin screwdriver 10 mm DIN 911	0	99999999999999999
370	006900	Fuse 1 A T 5x20 ceramic tube	0	99999999999999999
380	003228	6.3A fuse (not illustrated)	0	99999999999999999
390	003663	Fuse holder	0	99999999999999999
400	007629	Immersion sensor PT 1000 (not illustrated)	0	99999999999999999
405	502186	MES009M Immersion sensor	0	99999999999999999
410	005672	Thermostat LS1+100-6U	0	99999999999999999
415	003208	Grommet 10x17.5x1.2	0	99999999999999999
430	006833	Wago terminal block 261; 4-pin "12V GND"	0	99999999999999999
440	006834	Wago terminal block 261; 4-pin "safety 1-4"	0	99999999999999999
450	007656	Wago terminal block 261; 6-pin	0	99999999999999999
460	010047	Wago terminal block 261; 6-pin extra PCB	0	99999999999999999
470	005563	Rocker switch SW/GR 0-1	0	99999999999999999
480	018140	Cylinder screw 4.2x13 DIN7981ST (not illustrated)	0	99999999999999999

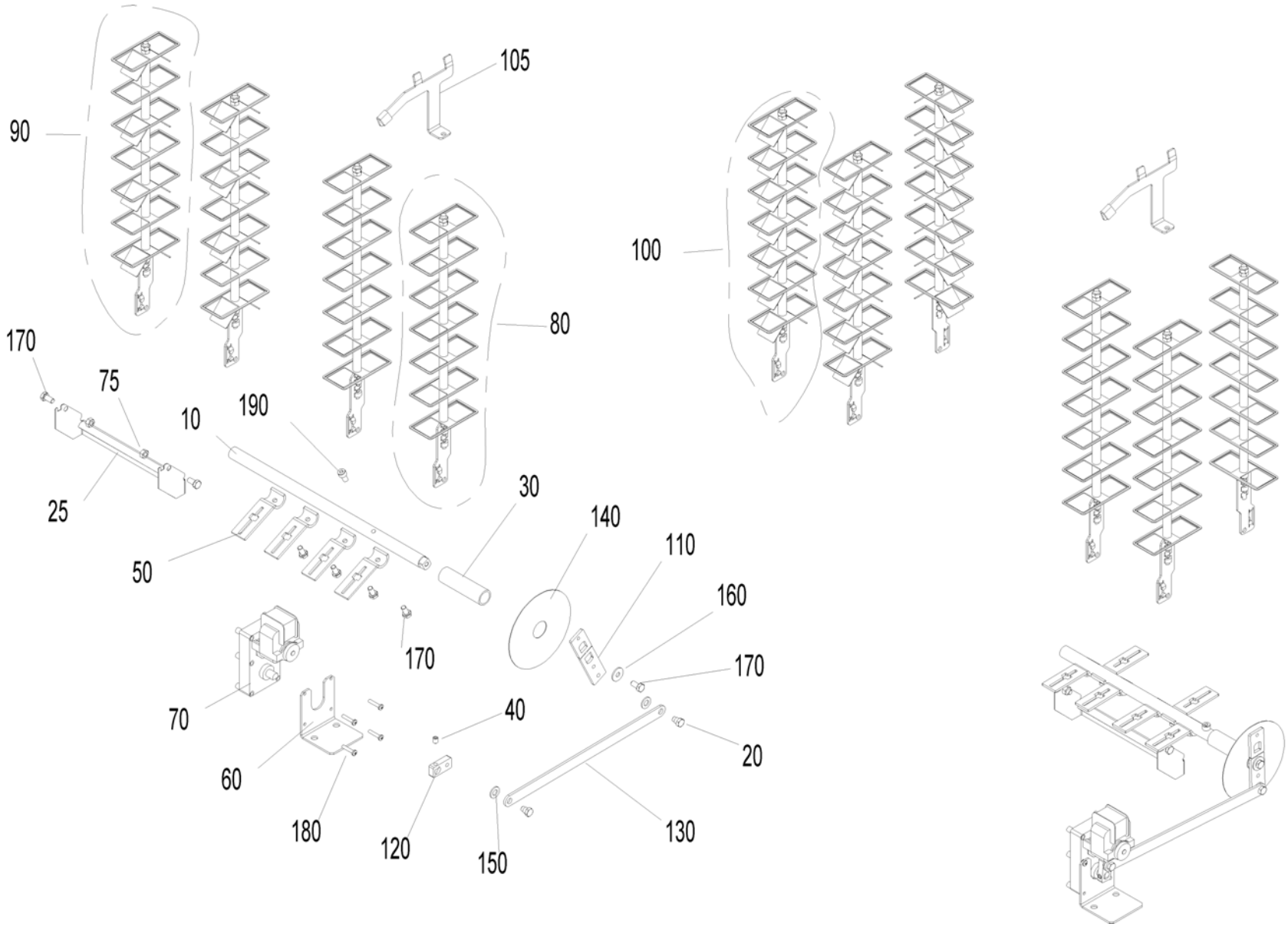
90
105
80
100
170
75
10
190
25
50
30
140
110
160
170
170
70
40
20
60
180
120
150
130

Item no.	Article no.	Description	Serialnumber from	Serialnumber to
10	048882	Axle heating surface BW2 10-26	0	99999999999999999
20	012502	Collar screw	0	99999999999999999
25	051624	Ash sheet	0	99999999999999999
30	048980	Distance rod	0	99999999999999999
40	033112	Setscrew M8x10 DIN916	0	99999999999999999
50	051547	Lever for cleaning heating surfaces	0	99999999999999999
60	051121	L-bracket, motor HFR	0	99999999999999999
70	044665	Motor	0	99999999999999999
75	015992	Nut M8 DIN 934 V2 - LogWIN Klassik pellet ready	0	99999999999999999
80	051609	Clearer flat	0	99999999999999999
90	051610	Clearer flat with turbulator	0	99999999999999999
100	051611	Clearer flat with turbulator	0	99999999999999999
105	051076	Cleaning plate for combustion chamber	0	99999999999999999
110	048884	Shaker lever 1	0	99999999999999999
120	048885	Shaker lever 2	0	99999999999999999
130	051367	Shaker lever 3	0	99999999999999999
140	051122	Disc	0	99999999999999999
150	024780	Disc 10 ISO7089	0	99999999999999999
160	031755	Disc 8 ISO 7093	0	99999999999999999
170	016721	Hexagon screw M8x16 DIN 933	0	99999999999999999
180	016837	Cylinder screw M5x25 ISO 7045	0	99999999999999999
190	016773	Cylinder screw M8x16 ISO 4762	0	99999999999999999

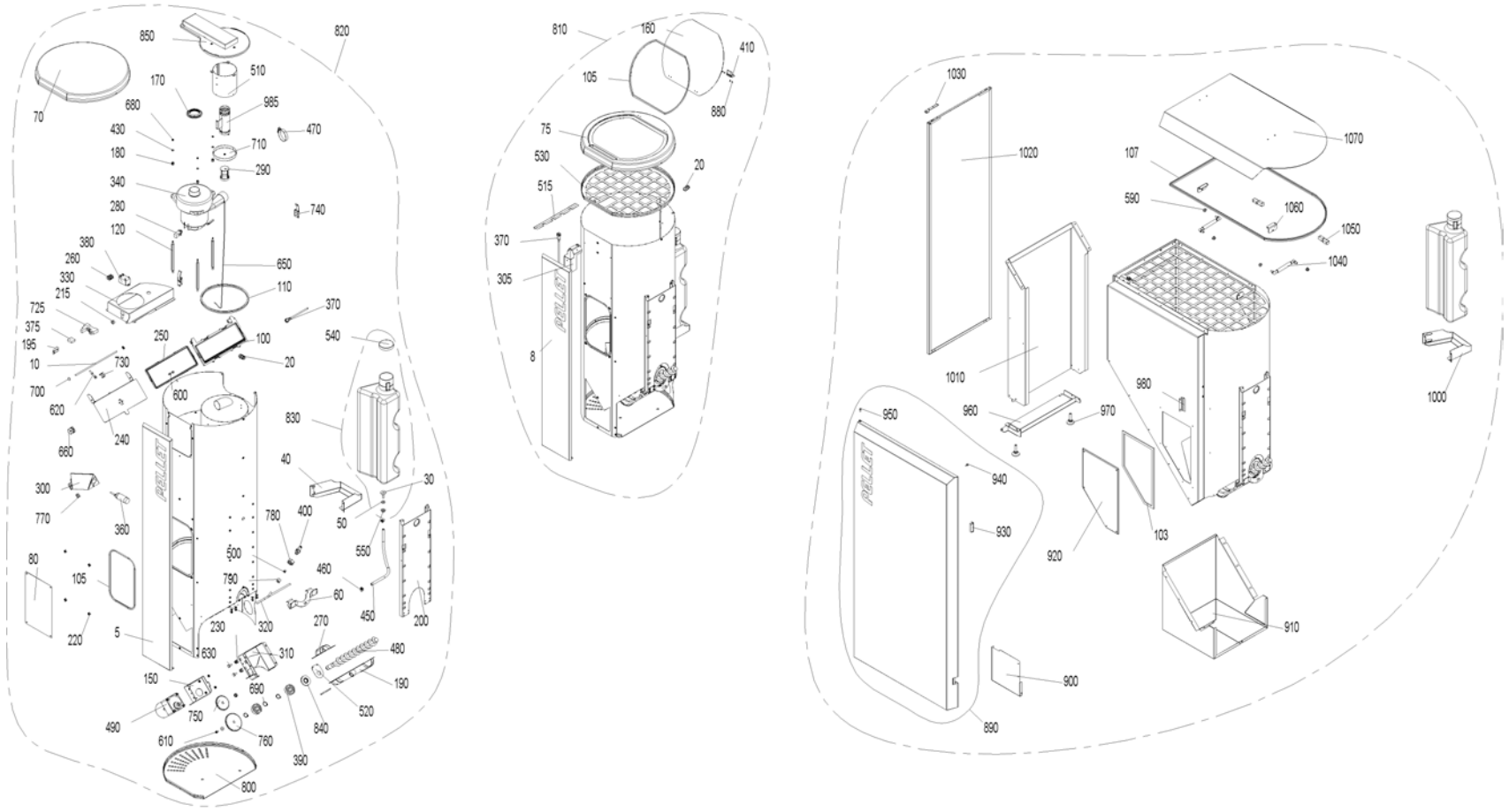
850
820
70
510
170
985
680
470
430
710
180
290
340
740
280
120
380
650
260
330
110
215
370
725
375
250
100
540
195
730
20
10
700
600
620
240
830
660
40
30
300
400
50
770
360
780
550
80
500
460
105
790
60
450
200
220
5
230
320
270
480
630
310
150
190
690
520
490
750
840
610
760
390
800
810
160
410
105
880
75
530
20
515
370
305
8
1030
1020
107
1070
590
1060
1050
1040
1010
980
960
970
1000
950
940
930
920
103
910
900
890

Item no.	Article no.	Description	Serialnumber from	Serialnumber to
5	051749	PB cover plate, grey	0	99999999999999999
8	051758	PB Klassik cover plate, grey	0	99999999999999999
10	042452	Feed axle	0	99999999999999999
20	006340	Mount connections PG9	0	99999999999999999
30	006877	Water connection	0	99999999999999999
40	051107	Water tank support	0	99999999999999999
50	006851	Support plate, motor	0	99999999999999999
60	048974	Fastening bracket	0	99999999999999999
70	050884	Pellet container cover	0	99999999999999999
75	051000	Pellet container cover Klassik	0	99999999999999999
80	050868	Cover reserve supply	0	99999999999999999
100	031254	Seal frame	0	99999999999999999
103	046665	Container seal	0	99999999999999999
105	053465	Reserve supply container seal	0	99999999999999999
107	053467	Seal profile reserve supply container 200 kg	0	99999999999999999
110	042232	Seal section	0	99999999999999999
120	031256	Distance bolt	0	99999999999999999
130	051386	Cheese head screw M5x10 Taptite	0	99999999999999999
140	051387	Cheese head screw M5x10 Taptite, grey	0	99999999999999999
150	051114	Flange, auger motor	0	99999999999999999
160	051001	Filling cover	0	99999999999999999
170	031253	Blower seal	0	99999999999999999
180	009559	Rubber grommet DK 6-9-12-7	0	99999999999999999
190	053540	Half-collar auger tube	0	99999999999999999
195	005077	Bracket	0	99999999999999999
200	048976	Retaining bracket, pellet tank	0	99999999999999999
210	045048	Cable feed with relay	0	99999999999999999
215	009542	Cable feed-through	0	99999999999999999
220	051388	Cage nut M5	0	99999999999999999
230	051112	Cage nut M8	0	99999999999999999
240	045955	Receptacle flap	0	99999999999999999
250	031257	Flap seal	0	99999999999999999
260	000965	Terminal, 3-pin	0	99999999999999999
270	048967	Clamp collar	0	99999999999999999
280	006859	Carbon brushes for blower motor	0	99999999999999999
290	042035	Piston	0	99999999999999999
300	048970	Proximity switch bracket	0	99999999999999999
305	051786	Proximity switch bracket lid	0	99999999999999999
310	048891	Auger motor bracket	0	99999999999999999
320	050867	Back-burn safeguard lead	0	99999999999999999
330	050866	Air duct	0	99999999999999999
340	044667	Blower motor 122151-12 for feed Conversion instructions for use with PMX 15-26 are enclosed! for BioWIN 10-26, PMX,BioWIN XL 35-6	0	99999999999999999
360	006821	Proximity switch, capacitive	0	99999999999999999
370	006832	Proximity switch M12, inductive	0	99999999999999999
375	005026	OKE9281 Cable protection plate	0	99999999999999999
380	005067	BW2 Relay 30A 250V	0	99999999999999999
390	012499	Grooved ball bearing	0	99999999999999999
400	042510	Burn-back protection completely assembled for PMX, BioWIN 10-26	0	99999999999999999
410	050990	Hinge M345	0	99999999999999999
420	018058	U-washer	0	99999999999999999
430	018309	Disc 5 DIN134	0	99999999999999999

Item no.	Article no.	Description	Serialnumber from	Serialnumber to
440	031753	Disc 6 ISO 7093	0	99999999999999999
450	008915	Hose 7x2	0	99999999999999999
460	006874	Hose clip ABA 11	0	99999999999999999
470	006875	Hose clip 40-60	0	99999999999999999
480	051544	Auger	0	99999999999999999
490	050901	Auger motor SPG	0	99999999999999999
500	006378	Cutting ring DL8 07-151	0	99999999999999999
510	045951	Partition plate	0	99999999999999999
510	052480	Partition plate	0	99999999999999999
515	051790	Protection plate for cable BW2	0	99999999999999999
520	048971	Protection plate	0	99999999999999999
530	051604	Protection plate, top, bottom	0	99999999999999999
540	051397	Protection cover GPN 690	0	99999999999999999
550	016567	Hexagon nut M10 with flange and gearing (not illustrated)	0	99999999999999999
560	016565	Hexagon nut M5 with flange and gearing (not illustrated)	0	99999999999999999
570	016586	Hexagon nut M5 DIN 934	0	99999999999999999
580	016594	Hexagon nut M6 DIN 934	0	99999999999999999
590	016553	Hexagon nut M8 with flange and gearing	0	99999999999999999
600	031545	Hexagon screw M5x12 DIN 7500 (not ilustrated)	0	99999999999999999
610	017051	Hexagon screw M6x12 DIN 933 (not illustrated)	0	99999999999999999
620	021504	Hexagon screw M6x45 DIN933	0	99999999999999999
630	015134	Hexagon screw M8x16 DIN 933	0	99999999999999999
640	017086	Hexagon screw M8x20 DIN 933 (not illustrated)	0	99999999999999999
650	031258	Cable	0	99999999999999999
660	031261	Cable pulley	0	99999999999999999
670	031096	Countersinking screw M4x20 DIN965 gv KS (not illustrated)	0	99999999999999999
680	016727	Lock nut M5	0	99999999999999999
690	016171	Locking ring Ø20x1.2	0	99999999999999999
700	006897	Lock washer Ø 6	0	99999999999999999
710	045949	Sieve with eye	0	99999999999999999
725	005043	Base for relay	0	99999999999999999
730	045952	Clamping piece for cable	0	99999999999999999
740	009546	Spring lock	0	99999999999999999
750	050869	Spur gear M2 Z36	0	99999999999999999
760	045771	Spur gear M2 Z45	0	99999999999999999
770	003208	Grommet 10x17.5x1.2	0	99999999999999999
780	013749	Union nut 3/8"	0	99999999999999999
790	006351	Union nut ML8 GV	0	99999999999999999
800	048986	Pellet container cladding	0	99999999999999999
810	050887	BIO91 Reserve supply container Klassik, without motor	0	99999999999999999
820	050888	BIO92 Reserve supply container Premium, without motor	0	99999999999999999
830	050379	Water tank	0	99999999999999999
840	048903	Shaft seal ring DIN 3760AS AD52 ID20	0	99999999999999999
850	045946	Cyclone cover for BioWIN2 to 1.02.2015	0	99999999999999999
850	053466	Cyclone cover	0	99999999999999999
860	019836	Cylinder screw 2.9x16 (not illustrated)	0	99999999999999999
870	018139	Cylinder screw 4.2x13 DIN7981SP (not illustrated)	0	99999999999999999
880	016768	Cylinder screw M3x5	0	99999999999999999
890	052474	Cladding door	0	99999999999999999
900	051779	Cover	0	99999999999999999
910	051755	CoverPB BioWIN2	0	99999999999999999

Item no.	Article no.	Description	Serialnumber from	Serialnumber to
920	051754	Maintenance cover BioWIN2	0	99999999999999999
930	001760	Magnetic lock, black - VW, LWP18-50, LWK	0	99999999999999999
940	000299	Silicone buffer	0	99999999999999999
950	004237	Cylinder screw M5x10 ISO 4762 (not illustrated)	0	99999999999999999
960	051753	Door mounting, bottom	0	99999999999999999
970	009990	Leg M10 x 40	0	99999999999999999
980	051773	Magnetic sheet	0	99999999999999999
985	052482	Suction pipe	0	99999999999999999
990	051775	BIO83 side panel	0	99999999999999999
990	051776	BIO82 side panel	0	99999999999999999
1000	051771	Water tank support	0	99999999999999999
1010	051614	Pedestal	0	99999999999999999
1020	051781	Left side panel, grey	0	99999999999999999
1030	051752	Door mounting, top	0	99999999999999999
1040	012600	Gas spring 4534DS 0100 N	0	99999999999999999
1050	044802	Southco hinge	0	99999999999999999
1060	051751	L-bracket	0	99999999999999999
1070	051783	Pellet container cover	0	99999999999999999

Ash conveyor (A000132)

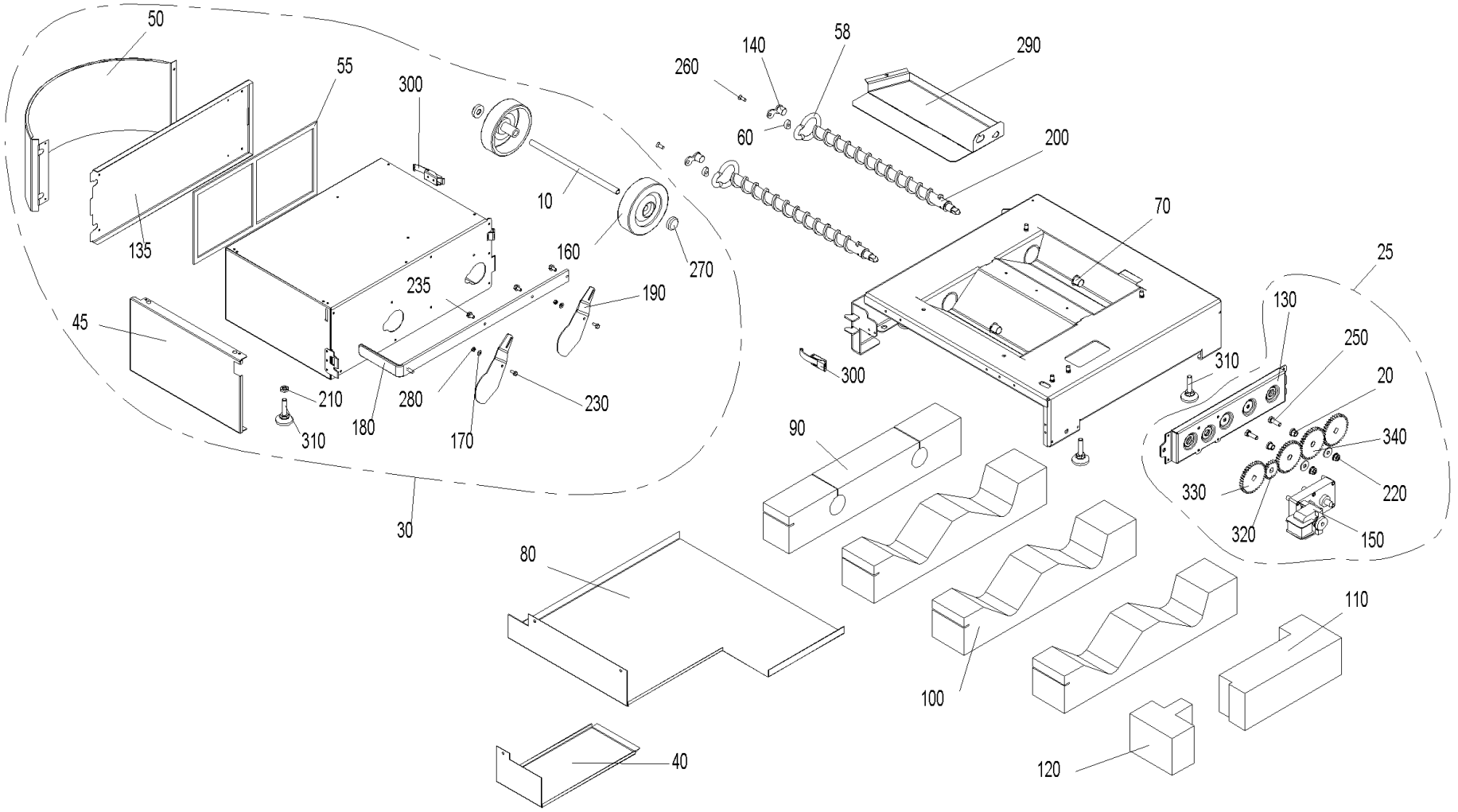

Ash conveyor (A000132)

Item no.	Article no.	Description	Quantity	Unit
10	051379	Ash box axle	1.00	pcs
290	050692	Ash box base	1.00	pcs
135	051635	Ash box flap	1.00	pcs
100	051127	Ash chamfer insulation	1.00	pcs
20	006745	Ash conveyor bearing bush	1.00	pcs
130	048572	Ash conveyor bracket	1.00	pcs
90	051126	Ash pipe insulation	1.00	pcs
25	054418	Ash removal, completely pre- mounted, BioWIN2	1.00	pcs
200	051542	Auger	1.00	pcs
140	051120	Auger bearing	1.00	pcs
30	054414	BIO90T Ash box, cpl for BWE102-262 T	1.00	pcs
55	046665	Container seal	1.00	pcs
260	016863	Countersinking screw M6x16	1.00	pcs
40	051125	Cover for ash conveyor motor	1.00	pcs
80	051124	Cup insulation	1.00	pcs
45	054342	de: Blende Aschebox BW2T	1.00	pcs
50	054343	de: Blende Aschebox rund BW2T	1.00	pcs
58	054679	de: Dichtung Flansch BW2	1.00	pcs
180	054444	de: Schieberblech BW2T	1.00	pcs
170	018309	Disc 5 DIN134	1.00	pcs
60	048573	Distance	1.00	pcs
70	012508	Friction bearing with connector	1.00	pcs

Ash conveyor (A000132)

Item no.	Article no.	Description	Quantity	Unit
220	016553	Hexagon nut M8 with flange and gearing	1.00	pcs
210	031156	Hexagon nut M10 DIN 439	1.00	pcs
230	031545	Hexagon screw M5x12 DIN 7500 (not ilustrated)	1.00	pcs
235	031549	Hexagon screw M6x12 DIN 7500	1.00	pcs
240	017086	Hexagon screw M8x20 DIN 933 (not illustrated)	1.00	pcs
250	017191	Hexagon screw M8x25 DIN 933	1.00	pcs
310	009990	Leg M10 x 40	1.00	pcs
280	016727	Lock nut M5	1.00	pcs
150	044665	Motor	1.00	pcs
120	051129	Motor insulation, front	1.00	pcs
110	051128	Motor insulation, rear	1.00	pcs
190	050686	Sliding plate	1.00	pcs
300	009546	Spring lock	1.00	pcs
320	047543	Spur gear M2 Z20	1.00	pcs
330	050869	Spur gear M2 Z36	1.00	pcs
340	048566	Spur gear M2 Z36 Ø12	1.00	pcs
270	006889	Washer Ø12	1.00	pcs
160	006888	Wheel AG 125-12	1.00	pcs

Boiler (BW2-K+BW2-K)

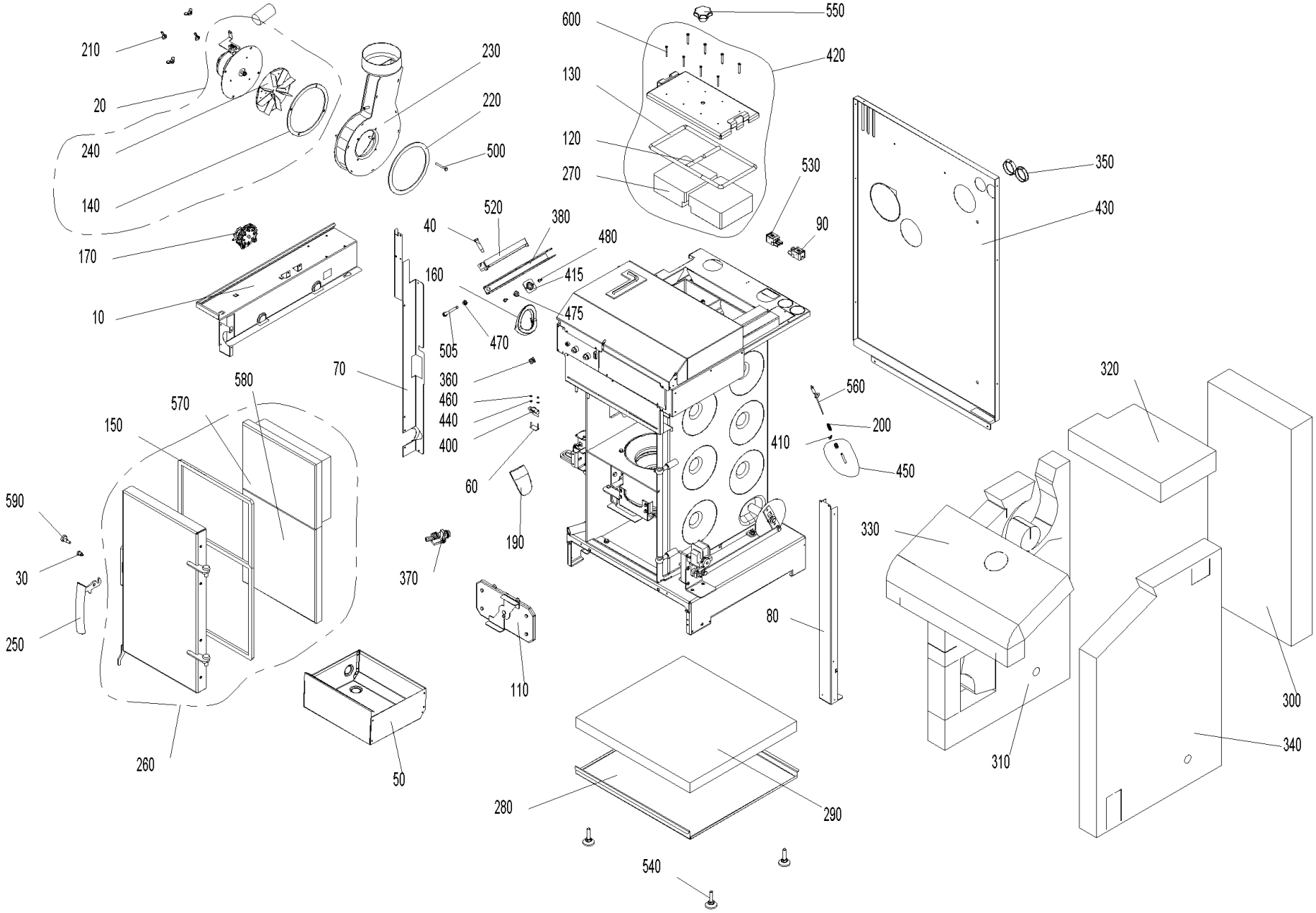

Boiler (BW2-K+BW2-K)

Item no.	Article no.	Description	Quantity	Unit
50	048928	Ash pan	1.00	pcs
160	048926	Auger tube seal	1.00	pcs
30	048881	Axle for door handle CK45	1.00	pcs
230	053234	Blower box for BioWIN102-262	1.00	pcs
140	051006	Blower box seal	1.00	pcs
220	051005	Blower seal	1.00	pcs
240	052951	Blower wheel Ø160 x 25 for BioWIN2 102 - 262	1.00	pcs
250	007480	Boiler handle	1.00	pcs
580	050447	Bottom door stone	1.00	pcs
350	004096	Cable feed-through 2400 black Ø50	2.00	pcs
360	051112	Cage nut M8	1.00	pcs
520	048975	Clamping rail	1.00	pcs
420	050477	Cleaning cover, complete	1.00	pcs
420	048870	Cleaning cover, complete	1.00	pcs
110	051056	Coasting surface cover, complete	1.00	pcs
320	048910	Coasting surface insulation	1.00	pcs
40	013813	Collar screw	1.00	pcs
200	050647	Combustion chamber sensor spring	1.00	pcs
70	051109	Cover, left	1.00	pcs
80	048609	Cover, right	1.00	pcs
10	050918	Cover plate	1.00	pcs
280	048863	Cup insulation 10-26 K BW2	1.00	pcs

Boiler (BW2-K+BW2-K)

Item no.	Article no.	Description	Quantity	Unit
600	016719	Cylinder drilling screw 4.2 x 38 DIN7504	8.00	pcs
10	048991	de: Abdeckblech BW2 21/26 BW2T	1.00	pcs
20	054674	de: Abgasgebläse inkl. Dichtung BW2-33KW, BW2-XL	1.00	pcs
140	054673	de: Dichtung Gebläsekasten BW2 33	1.00	pcs
230	054672	de: Gebläsekasten inkl. Dichtung BW2 33KW	1.00	pcs
240	054460	de: Gebläserad Ø210 33-62kW BW2T	1.00	pcs
320	048958	de: Glasfilz 22kg/m³ mit Glasseide	1.00	pcs
310	054455	de: Isolierung links BW2 33kW	1.00	pcs
310	051117	de: Isolierung links mit fadenverstärktem Vlies (natur) Glasfaser 22kg/m³	1.00	pcs
340	048907	de: Isolierung re Glasfilz 22kg/m³ mit Vlies einseitig	1.00	pcs
430	054851	de: Rückwand Kessel ET BioWIN2 und BioWIN2T 10/15 kW	1.00	pcs
430	054853	de: Rückwand Kessel ET BioWIN2 und BioWIN2T 21/26 kW	1.00	pcs
170	045404	Differential pressure watchdog	1.00	pcs
440	021474	Disc 3 DIN134	2.00	pcs
570	048914	Door stone	1.00	pcs
190	048921	Down chute	1.00	pcs
410	031274	Eyelet M6	1.00	pcs
60	051045	Fastened microswitch, complete	1.00	pcs
290	048864	Floor insulation	2.00	pcs
20	053010	Flue gas blower	1.00	pcs
260	051545	Heating door cpl. mounted	1.00	pcs
150	048916	Heating door seal	1.00	pcs

Boiler (BW2-K+BW2-K)

Item no.	Article no.	Description	Quantity	Unit
460	016551	Hexagon nut M3 DIN 934	2.00	pcs
475	016553	Hexagon nut M8 with flange and gearing	1.00	pcs
480	031545	Hexagon screw M5x12 DIN 7500 (not ilustrated)	1.00	pcs
500	021504	Hexagon screw M6x45 DIN933	4.00	pcs
505	016461	Hexagon screw M8x80 DIN 933	1.00	pcs
270	050636	Insulating stone for cleaning cover	2.00	pcs
270	051007	Insulating stone for cleaning cover	2.00	pcs
370	004385	KFE cock	1.00	pcs
310	051119	Left insulation	1.00	pcs
540	009990	Leg M10 x 40	4.00	pcs
590	051004	Locking pin	1.00	pcs
400	007632	Microswitch with lever	1.00	pcs
470	015992	Nut M8 DIN 934 V2 - LogWIN Klassik pellet ready	1.00	pcs
380	048611	Pellet container clamp	1.00	pcs
415	052484	Platelet flanged nut	1.00	pcs
530	070323	Plug, 3-pin, black	1.00	pcs
450	051069	Protective tube for combustion chamber sensor, complete	1.00	pcs
300	051116	Rear insulation	1.00	pcs
340	050924	Right insulation	1.00	pcs
120	051041	Sealing cord, short	2.00	pcs
120	051040	Sealing cord, short	2.00	pcs
130	051034	Sealing cord for cleaning cover	1.00	pcs

Boiler (BW2-K+BW2-K)

Item no.	Article no.	Description	Quantity	Unit
130	051017	Sealing cord for cleaning cover	1.00	pcs
90	070324	Socket, 3-pin, black	1.00	pcs
550	005125	Star handle M12 x 35	1.00	pcs
560	007626	Thermocouple	1.00	pcs
330	048911	Top insulation	1.00	pcs
210	019410	Wing nut M6	4.00	pcs

Burner pot 10/15 (A000026)

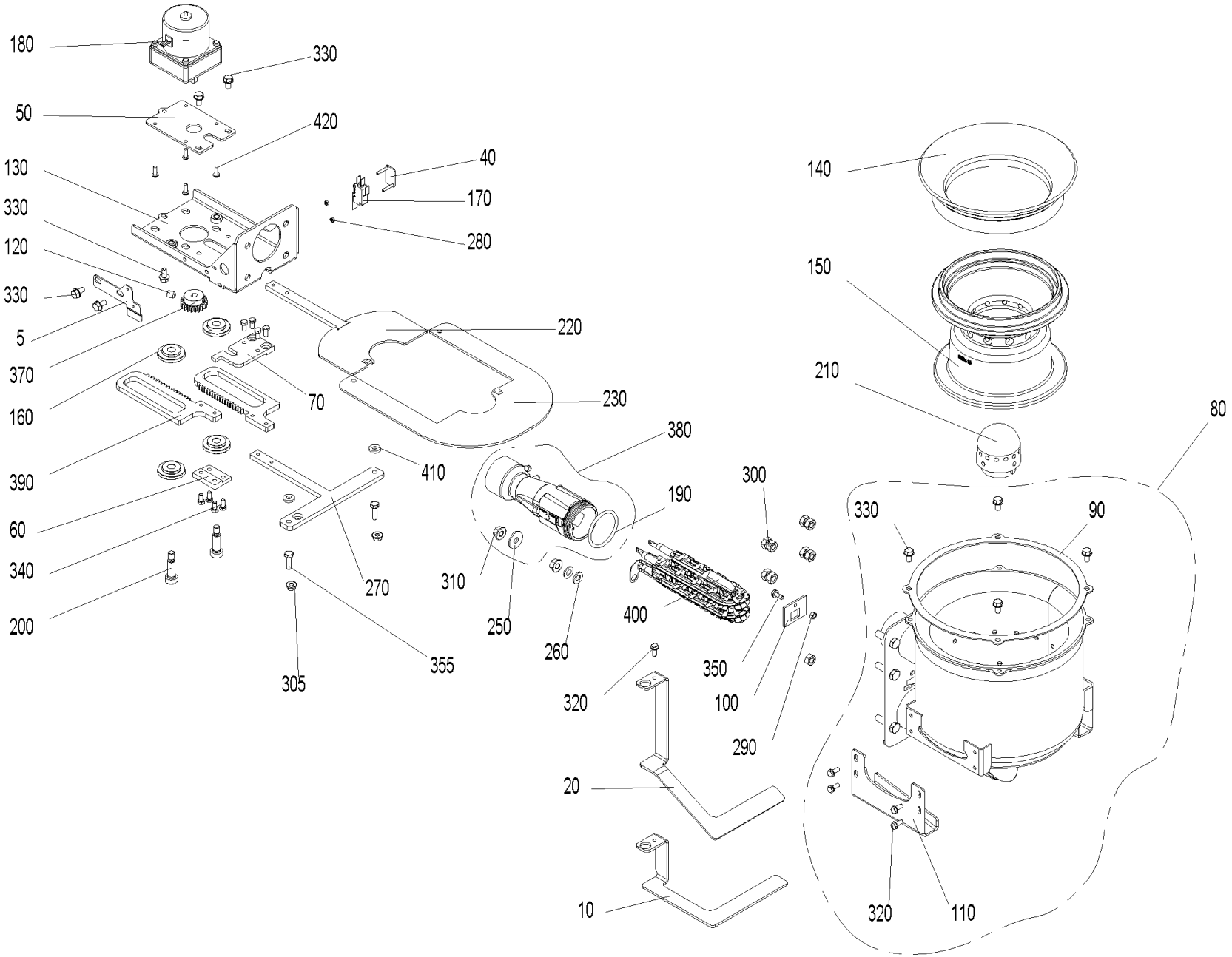

Burner pot 10/15 (A000026)

Item no.	Article no.	Description	Quantity	Unit
20	051046	Ash stop plate, Exclusive	1.00	pcs
10	051048	Ash stop plate, Klassik, Premium	1.00	pcs
160	007125	Bearing for vibrating drive	4.00	pcs
50	050632	Bracket mounting plate	1.00	pcs
80	051065	Burner	1.00	pcs
90	048861	Burner seal	1.00	pcs
125	053643	Cable - ignition element for BW1, BW2, FireWIN and VarioWIN	1.00	pcs
150	050643	Cone, bottom part	1.00	pcs
140	050642	Cone, top part 45°	1.00	pcs
420	016780	Cylinder screw M4x12 DIN 7985	4.00	pcs
350	015025	de: Sechskantschraube DIN 933 - M5x16 - 8.8 - verzinkt	1.00	pcs
260	024779	Disc 8 ISO 7089	2.00	pcs
250	031755	Disc 8 ISO 7093	1.00	pcs
100	048841	Driving rod feed-through	1.00	pcs
40	051045	Fastened microswitch, complete	1.00	pcs
220	051051	Grate plate, left	1.00	pcs
230	053539	Grate plate, right	1.00	pcs
110	048842	Grate plate guide	1.00	pcs
270	051023	Grate plate scraper	1.00	pcs
280	016551	Hexagon nut M3 DIN 934	2.00	pcs
290	017035	Hexagon nut M5 DIN 934	1.00	pcs
300	031153	Hexagon nut M8 DIN 934	9.00	pcs

Burner pot 10/15 (A000026)

Item no.	Article no.	Description	Quantity	Unit
310	016553	Hexagon nut M8 with flange and gearing	2.00	pcs
305	016566	Hexagon nut with flange and gearing M6	2.00	pcs
340	016756	Hexagon screw M5x10 DIN 933	4.00	pcs
320	031545	Hexagon screw M5x12 DIN 7500 (not ilustrated)	5.00	pcs
330	031549	Hexagon screw M6x12 DIN 7500	7.00	pcs
355	015471	Hexagon screw M6x20 DIN 933	2.00	pcs
400	055201	Ignition element BioWIN10-26, FireWIN from lot 15, VarioWIN from lot 15 BioWIN XL, LWK	1.00	pcs
402	053851	Ignition element with cable	1.00	pcs
410	051054	Intermediate plate	2.00	pcs
170	007632	Microswitch with lever	1.00	pcs
60	050649	Mounting plate	1.00	pcs
70	051042	Mounting plate, top	1.00	pcs
190	006849	O-ring FPM70 45 x 4	1.00	pcs
210	007210	Primary air pin	1.00	pcs
120	033112	Setscrew M8x10 DIN916	1.00	pcs
130	050639	Shake-out bracket	1.00	pcs
180	012561	Shake-out motor	1.00	pcs
200	017048	Shoulder screw M8 10x25 ISO 7379	2.00	pcs
370	007222	Spur gear M1,5; Z21	1.00	pcs
390	048161	Steering rack BioWin2 10-26	2.00	pcs
5	053544	Stop plate	1.00	pcs
380	051066	Venturi nozzle	1.00	pcs

Cladding (A000133)

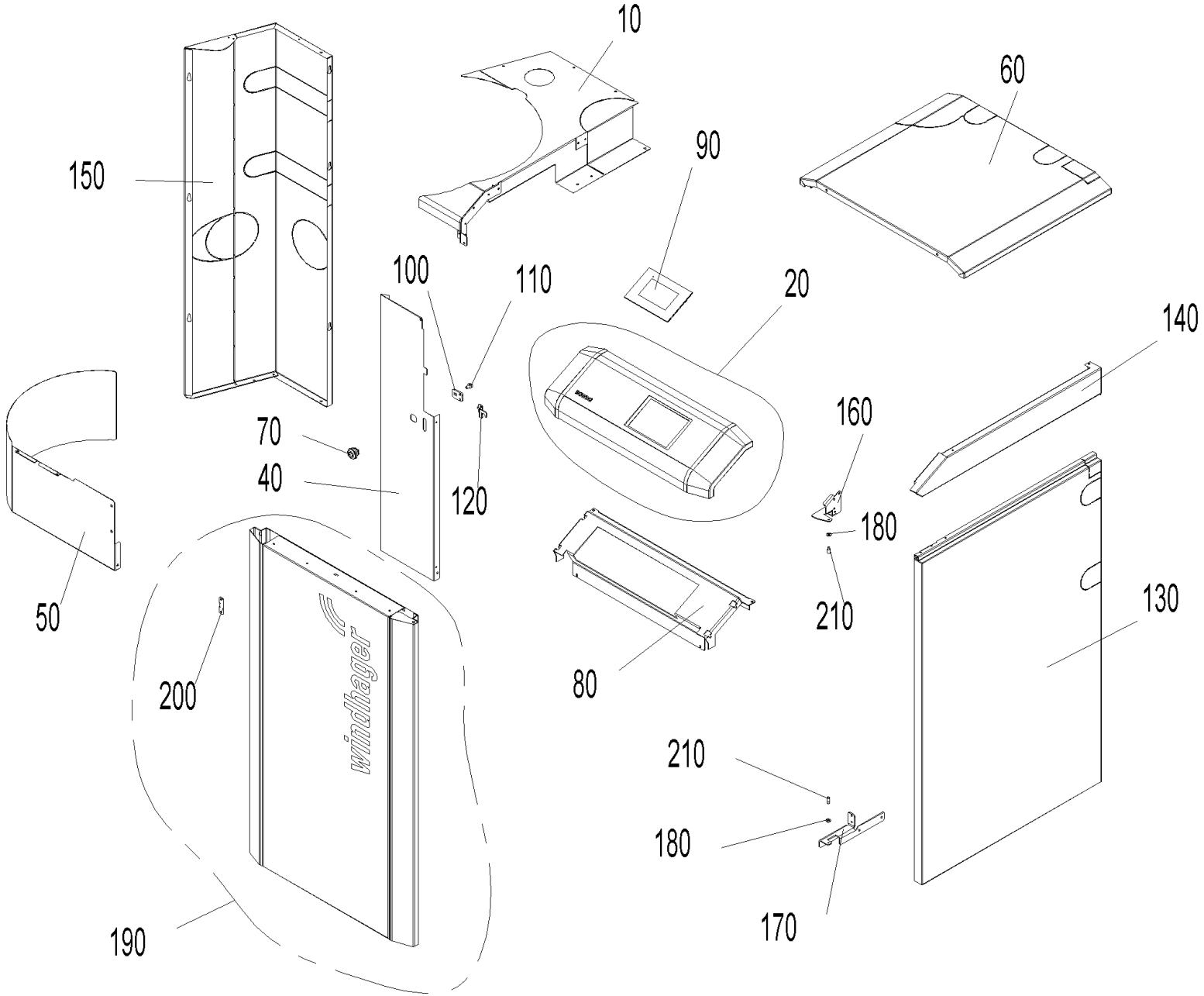

Cladding (A000133)

Item no.	Article no.	Description	Quantity	Unit
120	047893	Clamping plate	1.00	pcs
220	018139	Cylinder screw 4.2x13 DIN7981SP (not illustrated)	1.00	pcs
10	054443	de: Abdeckung hinten links BW2T 10/15	1.00	pcs
10	054442	de: Abdeckung hinten links kpl. BW2T 21/26	1.00	pcs
20	054440	de: Bedienfeld kpl. BW2T	1.00	pcs
40	054356	de: Blende links BW2T	1.00	pcs
50	054344	de: Blende Pelletsbehälter BW2T	1.00	pcs
60	054121	de: Deckel beschichtet RAL 7012, BW2T 10/15	1.00	pcs
60	054132	de: Deckel beschichtet RAL 7012, BW2T 21/26	1.00	pcs
80	054072	de: Haltekonsole BW2T	1.00	pcs
150	054353	de: Seitenwand links BW2T 10/15	1.00	pcs
150	054355	de: Seitenwand links BW2T 21/26	1.00	pcs
130	054359	de: Seitenwand rechts BW2T 10/15	1.00	pcs
130	054360	de: Seitenwand rechts BW2T 21/26	1.00	pcs
140	054075	de: Seitenwand rechts oben BW2T 10/15	1.00	pcs
140	054325	de: Seitenwand rechts oben BW2T 21/26	1.00	pcs
160	054077	de: Türlager oben BW2T	1.00	pcs
170	054076	de: Türlager unten BW2T	1.00	pcs
190	054441	de: Verkleidungstür kpl. BW2T	1.00	pcs
180	018309	Disc 5 DIN134	1.00	pcs
210	015507	Dog point screw	1.00	pcs
100	047891	Driver	1.00	pcs

Cladding (A000133)

Item no.	Article no.	Description	Quantity	Unit
110	031549	Hexagon screw M6x12 DIN 7500	1.00	pcs
90	001009	INF8 MES INFINITY InfoWIN Touch	1.00	pcs
200	047892	Locking plate	1.00	pcs
70	012256	Turning bolt	1.00	pcs

Control panel (A000131)

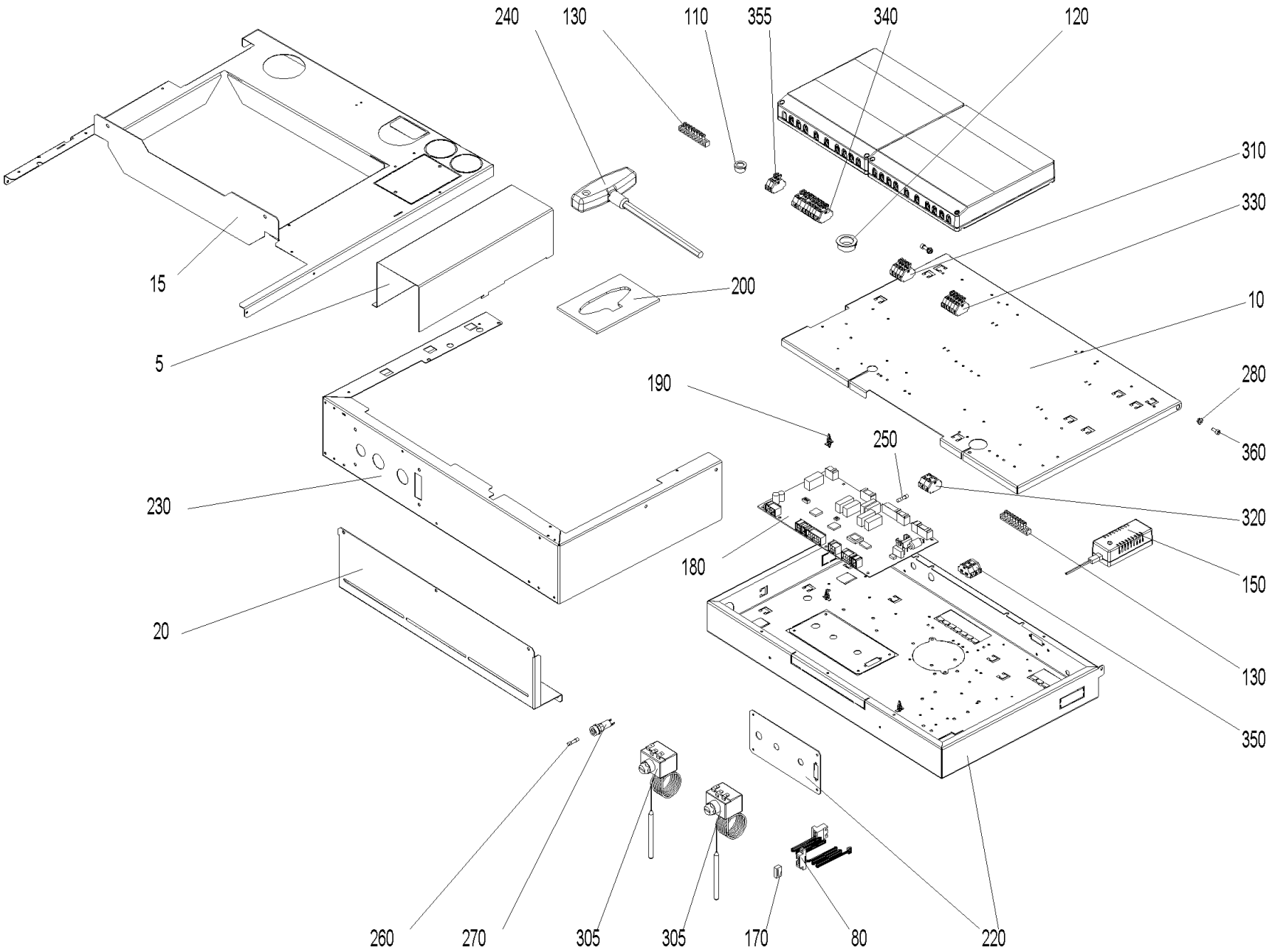

Control panel (A000131)

Item no.	Article no.	Description	Quantity	Unit
260	003228	6.3A fuse (not illustrated)	1.00	pcs
110	009542	Cable feed-through	1.00	pcs
370	018140	Cylinder screw 4.2x13 DIN7981ST (not illustrated)	1.00	pcs
5	054093	de: Abdeckung Kabelkanal BW2 10/15, BW2T 10/15	1.00	pcs
5	054334	de: Abdeckung Kabelkanal BW2 21/26, BW2T 21/26	1.00	pcs
10	053779	de: Deckel Schaltfeld BW2T, LWPT	1.00	pcs
15	054090	de: Haltekonsole Schaltfeld 10/15 BW2T	1.00	pcs
15	054097	de: Haltekonsole Schaltfeld 21/26 BW2	1.00	pcs
80	009605	de: Kabel - LON LWPT, BWXL2, BW2, BW2T	1.00	pcs
90	050976	de: Kabelbaum 12V BW2, BW2T	1.00	pcs
30	054294	de: Kabelbaum 230V BW2T	1.00	pcs
100	054296	de: Kabelbaum AAT+HFR BW2T	1.00	pcs
120	009536	de: Kabeldurchführung 2160 schwarz Ø 28	1.00	pcs
40	054292	de: Kabel Netz BW2T	1.00	pcs
50	054291	de: Kabel Saugturbine BW2T	1.00	pcs
60	054293	de: Kabel Saugzuggebläse BW2T	1.00	pcs
70	054290	de: Kabel STB BW2T	1.00	pcs
180	012016	de: Platine Feuerungsautomat FMP BW2T 33KW	1.00	pcs
200	054438	de: Position Sechskantsch. BW2T	1.00	pcs
230	054089	de: Schaltfeld Boden BW2T	1.00	pcs
220	052994	de: Schaltfeld Unterteil BW2T, LWPT	1.00	pcs
280	016564	de: Sperrzahnmutter M4 verzinkt	1.00	pcs

Control panel (A000131)

Item no.	Article no.	Description	Quantity	Unit
300	007624	de: Thermoelement 2AB NM30/110 mm TI/DI 2AB25 2,5 (Brennkammer- bzw. Thermocontrollfühler) Länge - Anschlußkabel 900mm	1.00	pcs
310	006835	de: Wagoblock 261 5tlg."ext. Wärme" 1-4 PMX, BW2T, LWPT	1.00	pcs
360	016782	de: Zylinderschraube m. Innensechskant ISO 4762 - M 4 x 10 - 8.8 - verzinkt (DIN 912)	1.00	pcs
250	006900	Fuse 1 A T 5x20 ceramic tube	1.00	pcs
270	003663	Fuse holder	1.00	pcs
240	027392	Hexagon pin key with T-handle 10x200 for VarioWIN, BioWIN XL 35-60	1.00	pcs
210	007629	Immersion sensor PT 1000 (not illustrated)	1.00	pcs
290	502186	MES009M Immersion sensor	1.00	pcs
140	018190	Oval-head screw 3.2x16 (not illustrated)	1.00	pcs
180	011990	PCB, FMP BW2	1.00	pcs
190	007609	PCB holder	1.00	pcs
170	005784	Pin connector (not illustrated)	1.00	pcs
150	051645	Power supply unit 12V	1.00	pcs
20	048902	Retaining plate	1.00	pcs
130	009929	Terminal bar MS 8-pin 8x8mm for VarioWIN,FireWIN, BioWIN XL 35-60	1.00	pcs
305	005672	Thermostat LS1+100-6U	1.00	pcs
330	006719	Wago terminal block 261 6-pce. heating requirement/probe switching for BioWIN 10-26, BioWIN XL 35-60 (*not illustrated)	1.00	pcs
355	009948	Wago terminal block 261; 2-pin WMS 1-2, 3-piece for VarioWIN, FireWIN	1.00	pcs
350	006833	Wago terminal block 261; 4-pin "12V GND"	1.00	pcs
320	006834	Wago terminal block 261; 4-pin "safety 1-4"	1.00	pcs
340	009891	Wago terminal block 261; 11-pin safety 1-11 for FireWIN, VarioWIN	1.00	pcs

Heating surface cleaning (BW2-HFR+BW2-HFR)

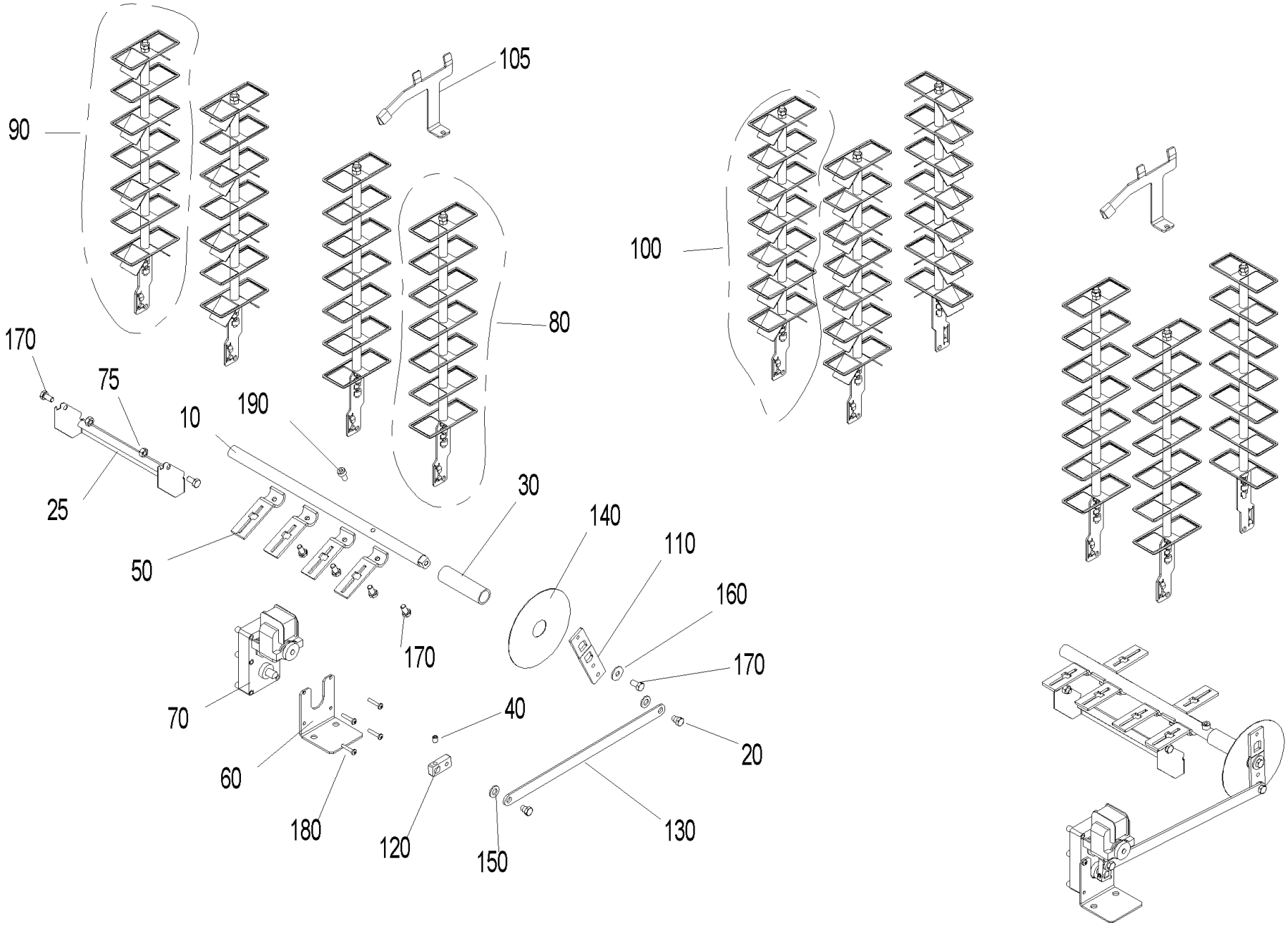

Heating surface cleaning (BW2-HFR+BW2-HFR)

Item no.	Article no.	Description	Quantity	Unit
25	051624	Ash sheet	1.00	pcs
10	048882	Axle heating surface BW2 10-26	1.00	pcs
105	051076	Cleaning plate for combustion chamber	1.00	pcs
80	051609	Clearer flat	1.00	pcs
100	051611	Clearer flat with turbulator	1.00	pcs
90	051610	Clearer flat with turbulator	1.00	pcs
20	012502	Collar screw	1.00	pcs
180	016837	Cylinder screw M5x25 ISO 7045	1.00	pcs
190	016773	Cylinder screw M8x16 ISO 4762	1.00	pcs
140	051122	Disc	1.00	pcs
160	031755	Disc 8 ISO 7093	1.00	pcs
150	024780	Disc 10 ISO7089	1.00	pcs
30	048980	Distance rod	1.00	pcs
170	016721	Hexagon screw M8x16 DIN 933	1.00	pcs
60	051121	L-bracket, motor HFR	1.00	pcs
50	051547	Lever for cleaning heating surfaces	1.00	pcs
70	044665	Motor	1.00	pcs
75	015992	Nut M8 DIN 934 V2 - LogWIN Klassik pellet ready	1.00	pcs
40	033112	Setscrew M8x10 DIN916	1.00	pcs
110	048884	Shaker lever 1	1.00	pcs
120	048885	Shaker lever 2	1.00	pcs
130	051367	Shaker lever 3	1.00	pcs

Pellet hopper (A000130)

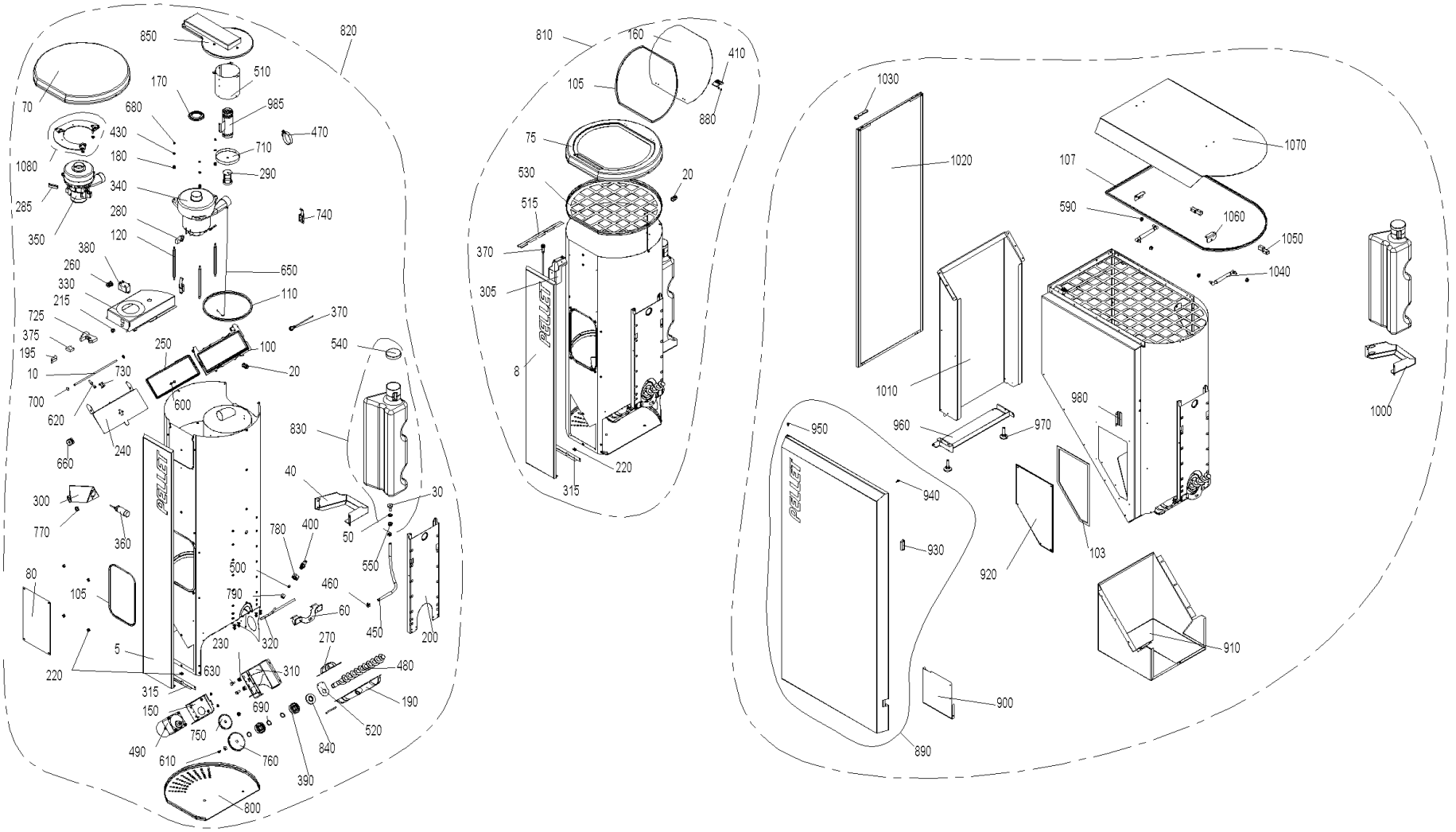

Pellet hopper (A000130)

Item no.	Article no.	Description	Quantity	Unit
330	050866	Air duct	1.00	pcs
480	051544	Auger	1.00	pcs
310	048891	Auger motor bracket	1.00	pcs
490	050901	Auger motor SPG	1.00	pcs
320	050867	Back-burn safeguard lead	1.00	pcs
725	005043	Base for relay	1.00	pcs
810	054409	BIO91T Reserve supply container for BW2 T Klassik	1.00	pcs
340	044667	Blower motor 122151-12 for feed Conversion instructions for use with PMX 15-26 are enclosed! for BioWIN 10-26, PMX,BioWIN XL 35-6	1.00	pcs
170	031253	Blower seal	1.00	pcs
195	005077	Bracket	1.00	pcs
400	042510	Burn-back protection completely assembled for PMX, BioWIN 10-26	1.00	pcs
380	005067	BW2 Relay 30A 250V	1.00	pcs
650	031258	Cable	1.00	pcs
215	009542	Cable feed-through	1.00	pcs
210	045048	Cable feed with relay	1.00	pcs
660	031261	Cable pulley	1.00	pcs
220	051388	Cage nut M5	1.00	pcs
230	051112	Cage nut M8	1.00	pcs
280	006859	Carbon brushes for blower motor	1.00	pcs
130	051386	Cheese head screw M5x10 Taptite	1.00	pcs
270	048967	Clamp collar	1.00	pcs
730	045952	Clamping piece for cable	1.00	pcs

Pellet hopper (A000130)

Item no.	Article no.	Description	Quantity	Unit
103	046665	Container seal	1.00	pcs
670	031096	Countersinking screw M4x20 DIN965 gv KS (not illustrated)	1.00	pcs
910	051755	CoverPB BioWIN2	1.00	pcs
500	006378	Cutting ring DL8 07-151	1.00	pcs
850	053466	Cyclone cover	1.00	pcs
850	046166	Cyclone cover, fully sealed, new ET for BioWIN 10-26 from batch 30	1.00	pcs
860	019836	Cylinder screw 2.9x16 (not illustrated)	1.00	pcs
870	018139	Cylinder screw 4.2x13 DIN7981SP (not illustrated)	1.00	pcs
880	016768	Cylinder screw M3x5	1.00	pcs
950	004237	Cylinder screw M5x10 ISO 4762 (not illustrated)	1.00	pcs
80	050868	de: +Deckel Vorratsbehälter BW2	1.00	pcs
8	054363	de: Abdeckblende Pelletsbehälter Klassik BW2T	1.00	pcs
5	054361	de: Abdeckblende Pelletsbehälter Premium BW2T	1.00	pcs
820	054408	de: BIO92T Pelletsbehälter BW2 T Premium/Exklusiv (für Sauglängen bis 25m)	1.00	pcs
900	054350	de: Blende PB Basaltgrau BW2T	1.00	pcs
70	054346	de: Deckel Pelletsbehälter BW2T	1.00	pcs
1070	054365	de: Deckel Pelletsbehälter BW2T	1.00	pcs
75	054348	de: Deckel Pelletsbehälter Klassik BW2T	1.00	pcs
140	053887	de: Flachkopfschraube 5x10	1.00	pcs
160	054349	de: Fülldeckel Basaltgrau BW2T	1.00	pcs
285	054653	de: Kohlebürstenset (2Stk.) zu Motor-Saugturbine 230V ebetec für Pellets-Zuführung 15m BW2T	1.00	pcs
300	048970	de: Konsole Näherungsschalter BW2T	1.00	pcs

Pellet hopper (A000130)

Item no.	Article no.	Description	Quantity	Unit
315	054424	de: L-Wi. Abdeckblende BW2T	1.00	pcs
350	006242	de: Motor -Saugturbine 15m, 230V, 1450W BW2T	1.00	pcs
360	007635	de: Näherungsschalter kapazitiv EC 3025 NPAPL mit Anschlußkabel 0,3m	1.00	pcs
520	048971	de: Schutzblech für Pelletsschnecke BW2, BW2T	1.00	pcs
1020	054352	de: Seitenwand links Pelletsbehälter BW2T	1.00	pcs
1030	051752	de: Türlager oben Pelletsbehälter BW2T	1.00	pcs
890	054439	de: Verkleidungstür PB BW2T	1.00	pcs
1080	054449	de: Zwischenplatte Gebläse montiert BW2, BW2T	1.00	pcs
430	018309	Disc 5 DIN134	1.00	pcs
440	031753	Disc 6 ISO 7093	1.00	pcs
120	031256	Distance bolt	1.00	pcs
960	051753	Door mounting, bottom	1.00	pcs
60	048974	Fastening bracket	1.00	pcs
10	042452	Feed axle	1.00	pcs
150	051114	Flange, auger motor	1.00	pcs
250	031257	Flap seal	1.00	pcs
1040	012600	Gas spring 4534DS 0100 N	1.00	pcs
770	003208	Grommet 10x17.5x1.2	1.00	pcs
390	012499	Grooved ball bearing	1.00	pcs
190	053540	Half-collar auger tube	1.00	pcs
570	016586	Hexagon nut M5 DIN 934	1.00	pcs
560	016565	Hexagon nut M5 with flange and gearing (not illustrated)	1.00	pcs

Pellet hopper (A000130)

Item no.	Article no.	Description	Quantity	Unit
580	016594	Hexagon nut M6 DIN 934	1.00	pcs
590	016553	Hexagon nut M8 with flange and gearing	1.00	pcs
550	016567	Hexagon nut M10 with flange and gearing (not illustrated)	1.00	pcs
600	031545	Hexagon screw M5x12 DIN 7500 (not ilustrated)	1.00	pcs
610	017051	Hexagon screw M6x12 DIN 933 (not illustrated)	1.00	pcs
620	021504	Hexagon screw M6x45 DIN933	1.00	pcs
630	015134	Hexagon screw M8x16 DIN 933	1.00	pcs
640	017086	Hexagon screw M8x20 DIN 933 (not illustrated)	1.00	pcs
410	050990	Hinge M345	1.00	pcs
450	008915	Hose 7x2	1.00	m
470	006875	Hose clip 40-60	1.00	pcs
460	006874	Hose clip ABA 11	1.00	pcs
1060	051751	L-bracket	1.00	pcs
970	009990	Leg M10 x 40	1.00	pcs
690	016171	Locking ring Ø20x1.2	1.00	pcs
680	016727	Lock nut M5	1.00	pcs
700	006897	Lock washer Ø 6	1.00	pcs
930	001760	Magnetic lock, black - VW, LWP18-50, LWK	1.00	pcs
980	051773	Magnetic sheet	1.00	pcs
920	051754	Maintenance cover BioWIN2	1.00	pcs
20	006340	Mount connections PG9	1.00	pcs
375	005026	OKE9281 Cable protection plate	1.00	pcs

Pellet hopper (A000130)

Item no.	Article no.	Description	Quantity	Unit
510	045951	Partition plate	1.00	pcs
510	052480	Partition plate	1.00	pcs
1010	051614	Pedestal	1.00	pcs
800	048986	Pellet container cladding	1.00	pcs
290	042035	Piston	1.00	pcs
540	051397	Protection cover GPN 690	1.00	pcs
515	051790	Protection plate for cable BW2	1.00	pcs
305	051786	Proximity switch bracket lid	1.00	pcs
370	006832	Proximity switch M12, inductive	1.00	pcs
240	045955	Receptacle flap	1.00	pcs
105	053465	Reserve supply container seal	1.00	pcs
200	048976	Retaining bracket, pellet tank	1.00	pcs
180	009559	Rubber grommet DK 6-9-12-7	1.00	pcs
100	031254	Seal frame	1.00	pcs
107	053467	Seal profile reserve supply container 200 kg	1.00	pcs
110	042232	Seal section	1.00	pcs
840	048903	Shaft seal ring DIN 3760AS AD52 ID20	1.00	pcs
710	045949	Sieve with eye	1.00	pcs
940	000299	Silicone buffer	1.00	pcs
1050	044802	Southco hinge	1.00	pcs
740	009546	Spring lock	1.00	pcs
750	050869	Spur gear M2 Z36	1.00	pcs

Pellet hopper (A000130)

Item no.	Article no.	Description	Quantity	Unit
760	045771	Spur gear M2 Z45	1.00	pcs
985	052482	Suction pipe	1.00	pcs
50	006851	Support plate, motor	1.00	pcs
260	000965	Terminal, 3-pin	1.00	pcs
420	018058	U-washer	1.00	pcs
780	013749	Union nut 3/8"	1.00	pcs
790	006351	Union nut ML8 GV	1.00	pcs
30	006877	Water connection	1.00	pcs
830	050379	Water tank	1.00	pcs
40	051107	Water tank support	1.00	pcs
1000	051771	Water tank support	1.00	pcs

Ash conveyor (A000132)

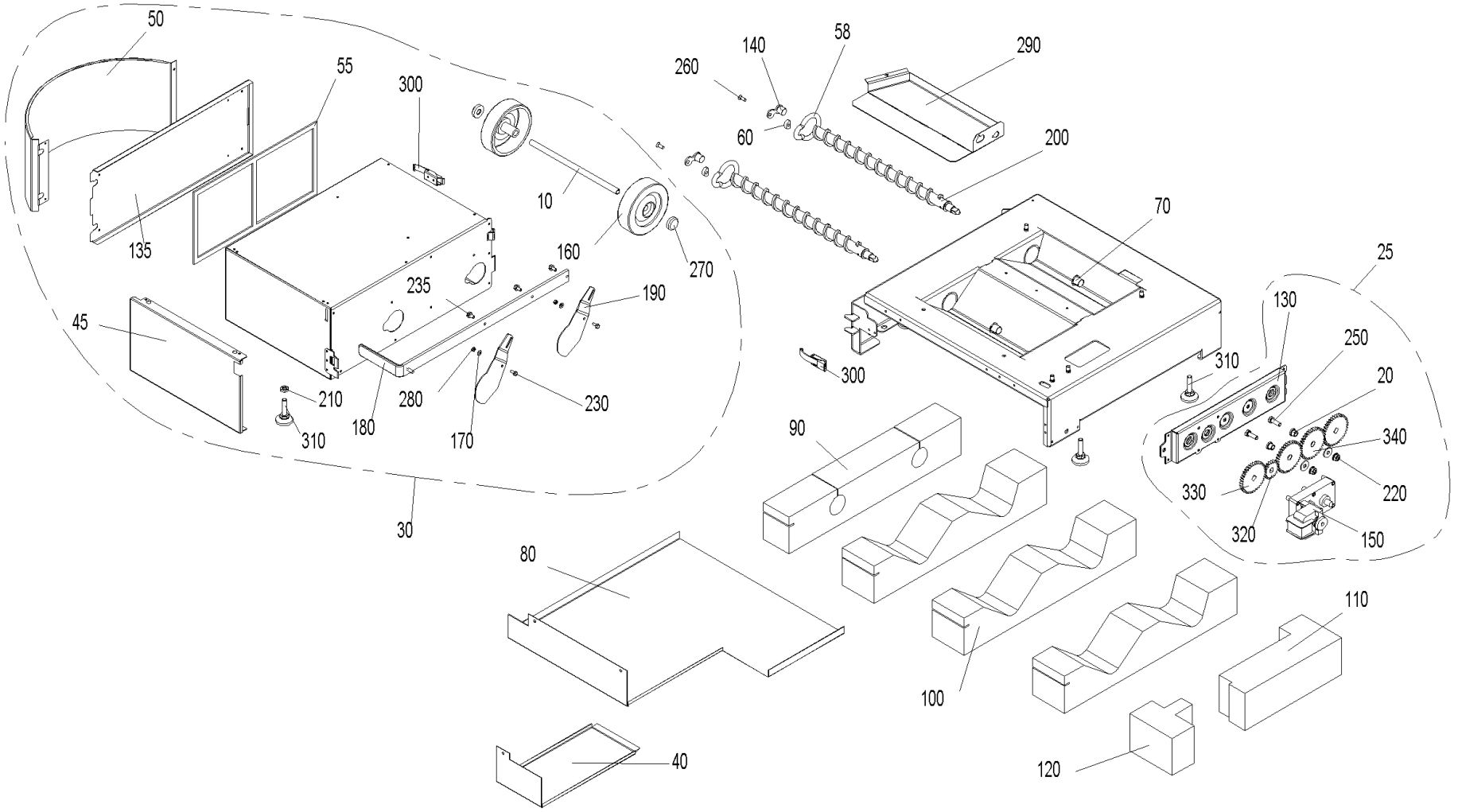

Ash conveyor (A000132)

Item no.	Article no.	Description	Quantity	Unit
10	051379	Ash box axle	1.00	pcs
290	050692	Ash box base	1.00	pcs
135	051635	Ash box flap	1.00	pcs
100	051127	Ash chamfer insulation	1.00	pcs
20	006745	Ash conveyor bearing bush	1.00	pcs
130	048572	Ash conveyor bracket	1.00	pcs
90	051126	Ash pipe insulation	1.00	pcs
25	054418	Ash removal, completely pre- mounted, BioWIN2	1.00	pcs
200	051542	Auger	1.00	pcs
140	051120	Auger bearing	1.00	pcs
30	054414	BIO90T Ash box, cpl for BWE102-262 T	1.00	pcs
55	046665	Container seal	1.00	pcs
260	016863	Countersinking screw M6x16	1.00	pcs
40	051125	Cover for ash conveyor motor	1.00	pcs
80	051124	Cup insulation	1.00	pcs
45	054342	de: Blende Aschebox BW2T	1.00	pcs
50	054343	de: Blende Aschebox rund BW2T	1.00	pcs
58	054679	de: Dichtung Flansch BW2	1.00	pcs
180	054444	de: Schieberblech BW2T	1.00	pcs
170	018309	Disc 5 DIN134	1.00	pcs
60	048573	Distance	1.00	pcs
70	012508	Friction bearing with connector	1.00	pcs

Ash conveyor (A000132)

Item no.	Article no.	Description	Quantity	Unit
220	016553	Hexagon nut M8 with flange and gearing	1.00	pcs
210	031156	Hexagon nut M10 DIN 439	1.00	pcs
230	031545	Hexagon screw M5x12 DIN 7500 (not ilustrated)	1.00	pcs
235	031549	Hexagon screw M6x12 DIN 7500	1.00	pcs
240	017086	Hexagon screw M8x20 DIN 933 (not illustrated)	1.00	pcs
250	017191	Hexagon screw M8x25 DIN 933	1.00	pcs
310	009990	Leg M10 x 40	1.00	pcs
280	016727	Lock nut M5	1.00	pcs
150	044665	Motor	1.00	pcs
120	051129	Motor insulation, front	1.00	pcs
110	051128	Motor insulation, rear	1.00	pcs
190	050686	Sliding plate	1.00	pcs
300	009546	Spring lock	1.00	pcs
320	047543	Spur gear M2 Z20	1.00	pcs
330	050869	Spur gear M2 Z36	1.00	pcs
340	048566	Spur gear M2 Z36 Ø12	1.00	pcs
270	006889	Washer Ø12	1.00	pcs
160	006888	Wheel AG 125-12	1.00	pcs

Boiler (BW2-K+BW2-K)

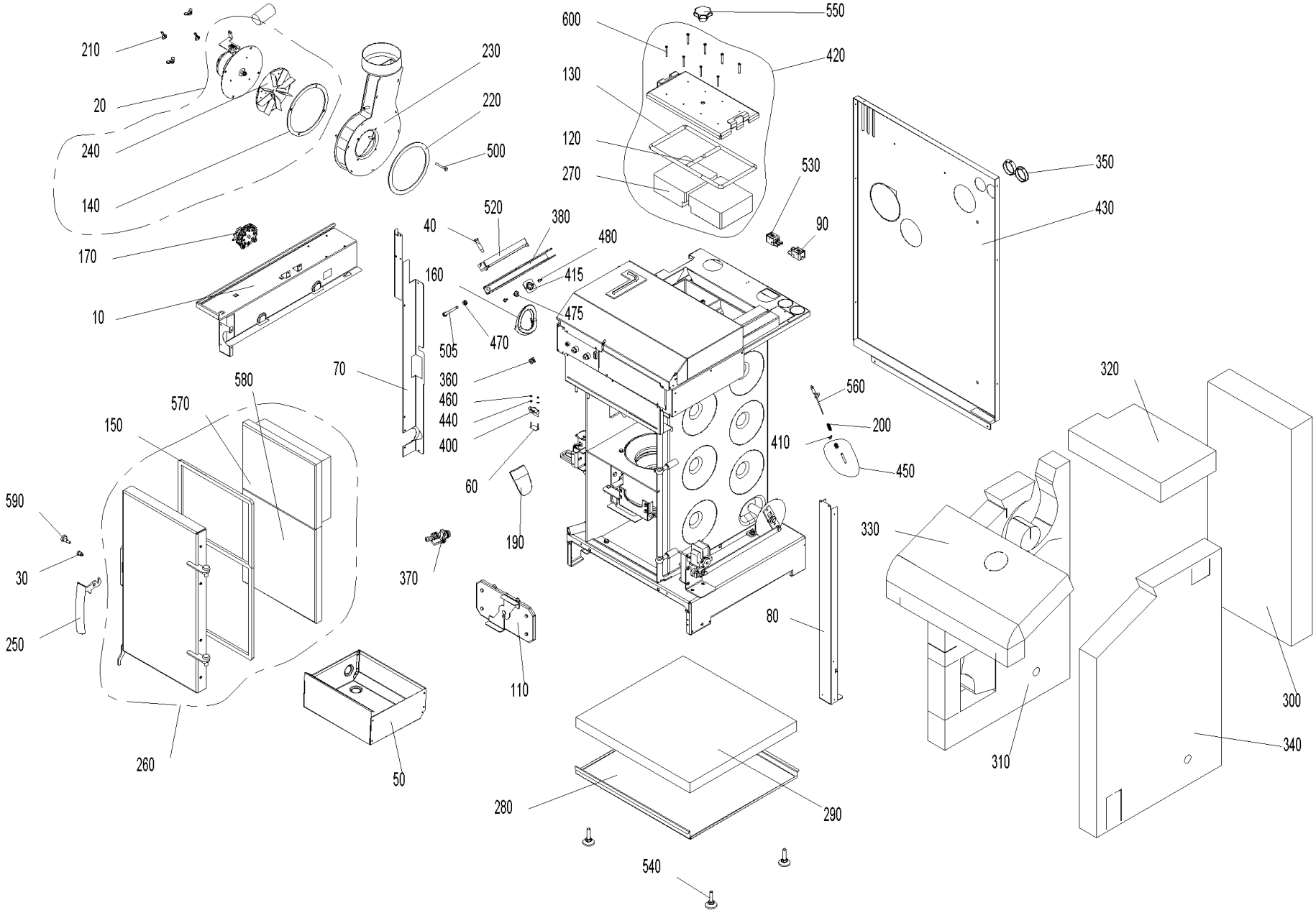

Boiler (BW2-K+BW2-K)

Item no.	Article no.	Description	Quantity	Unit
50	048928	Ash pan	1.00	pcs
160	048926	Auger tube seal	1.00	pcs
30	048881	Axle for door handle CK45	1.00	pcs
230	053234	Blower box for BioWIN102-262	1.00	pcs
140	051006	Blower box seal	1.00	pcs
220	051005	Blower seal	1.00	pcs
240	052951	Blower wheel Ø160 x 25 for BioWIN2 102 - 262	1.00	pcs
250	007480	Boiler handle	1.00	pcs
580	050447	Bottom door stone	1.00	pcs
350	004096	Cable feed-through 2400 black Ø50	2.00	pcs
360	051112	Cage nut M8	1.00	pcs
520	048975	Clamping rail	1.00	pcs
420	050477	Cleaning cover, complete	1.00	pcs
420	048870	Cleaning cover, complete	1.00	pcs
110	051056	Coasting surface cover, complete	1.00	pcs
320	048910	Coasting surface insulation	1.00	pcs
40	013813	Collar screw	1.00	pcs
200	050647	Combustion chamber sensor spring	1.00	pcs
70	051109	Cover, left	1.00	pcs
80	048609	Cover, right	1.00	pcs
10	050918	Cover plate	1.00	pcs
280	048863	Cup insulation 10-26 K BW2	1.00	pcs

Boiler (BW2-K+BW2-K)

Item no.	Article no.	Description	Quantity	Unit
600	016719	Cylinder drilling screw 4.2 x 38 DIN7504	8.00	pcs
10	048991	de: Abdeckblech BW2 21/26 BW2T	1.00	pcs
20	054674	de: Abgasgebläse inkl. Dichtung BW2-33KW, BW2-XL	1.00	pcs
140	054673	de: Dichtung Gebläsekasten BW2 33	1.00	pcs
230	054672	de: Gebläsekasten inkl. Dichtung BW2 33KW	1.00	pcs
240	054460	de: Gebläserad Ø210 33-62kW BW2T	1.00	pcs
320	048958	de: Glasfilz 22kg/m³ mit Glasseide	1.00	pcs
310	054455	de: Isolierung links BW2 33kW	1.00	pcs
310	051117	de: Isolierung links mit fadenverstärktem Vlies (natur) Glasfaser 22kg/m³	1.00	pcs
340	048907	de: Isolierung re Glasfilz 22kg/m³ mit Vlies einseitig	1.00	pcs
430	054851	de: Rückwand Kessel ET BioWIN2 und BioWIN2T 10/15 kW	1.00	pcs
430	054853	de: Rückwand Kessel ET BioWIN2 und BioWIN2T 21/26 kW	1.00	pcs
170	045404	Differential pressure watchdog	1.00	pcs
440	021474	Disc 3 DIN134	2.00	pcs
570	048914	Door stone	1.00	pcs
190	048921	Down chute	1.00	pcs
410	031274	Eyelet M6	1.00	pcs
60	051045	Fastened microswitch, complete	1.00	pcs
290	048864	Floor insulation	2.00	pcs
20	053010	Flue gas blower	1.00	pcs
260	051545	Heating door cpl. mounted	1.00	pcs
150	048916	Heating door seal	1.00	pcs

Boiler (BW2-K+BW2-K)

Item no.	Article no.	Description	Quantity	Unit
460	016551	Hexagon nut M3 DIN 934	2.00	pcs
475	016553	Hexagon nut M8 with flange and gearing	1.00	pcs
480	031545	Hexagon screw M5x12 DIN 7500 (not ilustrated)	1.00	pcs
500	021504	Hexagon screw M6x45 DIN933	4.00	pcs
505	016461	Hexagon screw M8x80 DIN 933	1.00	pcs
270	050636	Insulating stone for cleaning cover	2.00	pcs
270	051007	Insulating stone for cleaning cover	2.00	pcs
370	004385	KFE cock	1.00	pcs
310	051119	Left insulation	1.00	pcs
540	009990	Leg M10 x 40	4.00	pcs
590	051004	Locking pin	1.00	pcs
400	007632	Microswitch with lever	1.00	pcs
470	015992	Nut M8 DIN 934 V2 - LogWIN Klassik pellet ready	1.00	pcs
380	048611	Pellet container clamp	1.00	pcs
415	052484	Platelet flanged nut	1.00	pcs
530	070323	Plug, 3-pin, black	1.00	pcs
450	051069	Protective tube for combustion chamber sensor, complete	1.00	pcs
300	051116	Rear insulation	1.00	pcs
340	050924	Right insulation	1.00	pcs
120	051041	Sealing cord, short	2.00	pcs
120	051040	Sealing cord, short	2.00	pcs
130	051034	Sealing cord for cleaning cover	1.00	pcs

Boiler (BW2-K+BW2-K)

Item no.	Article no.	Description	Quantity	Unit
130	051017	Sealing cord for cleaning cover	1.00	pcs
90	070324	Socket, 3-pin, black	1.00	pcs
550	005125	Star handle M12 x 35	1.00	pcs
560	007626	Thermocouple	1.00	pcs
330	048911	Top insulation	1.00	pcs
210	019410	Wing nut M6	4.00	pcs

Burner pot 10/15 (A000026)

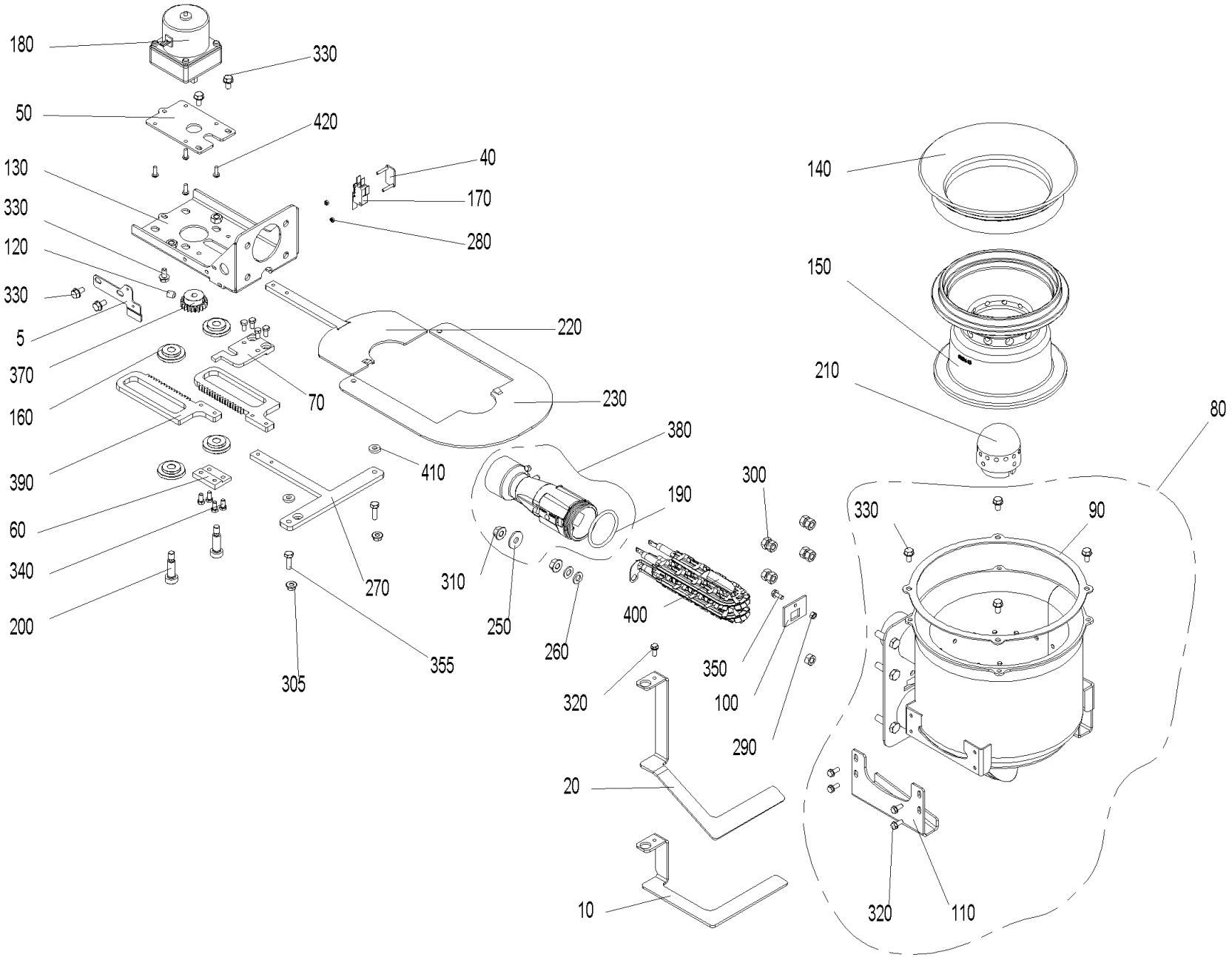

Burner pot 10/15 (A000026)

Item no.	Article no.	Description	Quantity	Unit
20	051046	Ash stop plate, Exclusive	1.00	pcs
10	051048	Ash stop plate, Klassik, Premium	1.00	pcs
160	007125	Bearing for vibrating drive	4.00	pcs
50	050632	Bracket mounting plate	1.00	pcs
80	051065	Burner	1.00	pcs
90	048861	Burner seal	1.00	pcs
125	053643	Cable - ignition element for BW1, BW2, FireWIN and VarioWIN	1.00	pcs
150	050643	Cone, bottom part	1.00	pcs
140	050642	Cone, top part 45°	1.00	pcs
420	016780	Cylinder screw M4x12 DIN 7985	4.00	pcs
350	015025	de: Sechskantschraube DIN 933 - M5x16 - 8.8 - verzinkt	1.00	pcs
260	024779	Disc 8 ISO 7089	2.00	pcs
250	031755	Disc 8 ISO 7093	1.00	pcs
100	048841	Driving rod feed-through	1.00	pcs
40	051045	Fastened microswitch, complete	1.00	pcs
220	051051	Grate plate, left	1.00	pcs
230	053539	Grate plate, right	1.00	pcs
110	048842	Grate plate guide	1.00	pcs
270	051023	Grate plate scraper	1.00	pcs
280	016551	Hexagon nut M3 DIN 934	2.00	pcs
290	017035	Hexagon nut M5 DIN 934	1.00	pcs
300	031153	Hexagon nut M8 DIN 934	9.00	pcs

Burner pot 10/15 (A000026)

Item no.	Article no.	Description	Quantity	Unit
310	016553	Hexagon nut M8 with flange and gearing	2.00	pcs
305	016566	Hexagon nut with flange and gearing M6	2.00	pcs
340	016756	Hexagon screw M5x10 DIN 933	4.00	pcs
320	031545	Hexagon screw M5x12 DIN 7500 (not ilustrated)	5.00	pcs
330	031549	Hexagon screw M6x12 DIN 7500	7.00	pcs
355	015471	Hexagon screw M6x20 DIN 933	2.00	pcs
400	055201	Ignition element BioWIN10-26, FireWIN from lot 15, VarioWIN from lot 15 BioWIN XL, LWK	1.00	pcs
402	053851	Ignition element with cable	1.00	pcs
410	051054	Intermediate plate	2.00	pcs
170	007632	Microswitch with lever	1.00	pcs
60	050649	Mounting plate	1.00	pcs
70	051042	Mounting plate, top	1.00	pcs
190	006849	O-ring FPM70 45 x 4	1.00	pcs
210	007210	Primary air pin	1.00	pcs
120	033112	Setscrew M8x10 DIN916	1.00	pcs
130	050639	Shake-out bracket	1.00	pcs
180	012561	Shake-out motor	1.00	pcs
200	017048	Shoulder screw M8 10x25 ISO 7379	2.00	pcs
370	007222	Spur gear M1,5; Z21	1.00	pcs
390	048161	Steering rack BioWin2 10-26	2.00	pcs
5	053544	Stop plate	1.00	pcs
380	051066	Venturi nozzle	1.00	pcs

Cladding (A000133)

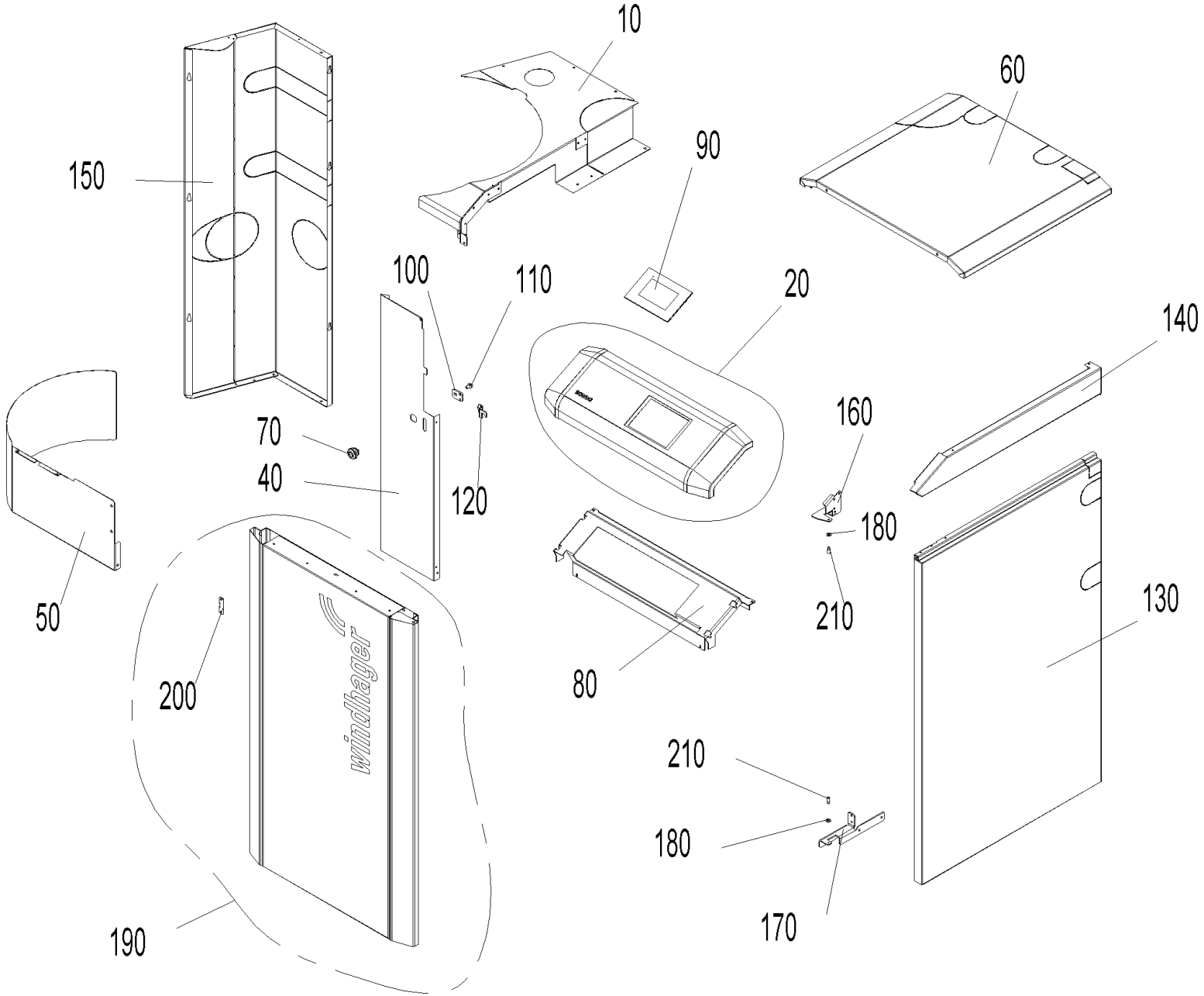

Cladding (A000133)

Item no.	Article no.	Description	Quantity	Unit
120	047893	Clamping plate	1.00	pcs
220	018139	Cylinder screw 4.2x13 DIN7981SP (not illustrated)	1.00	pcs
10	054443	de: Abdeckung hinten links BW2T 10/15	1.00	pcs
10	054442	de: Abdeckung hinten links kpl. BW2T 21/26	1.00	pcs
20	054440	de: Bedienfeld kpl. BW2T	1.00	pcs
40	054356	de: Blende links BW2T	1.00	pcs
50	054344	de: Blende Pelletsbehälter BW2T	1.00	pcs
60	054121	de: Deckel beschichtet RAL 7012, BW2T 10/15	1.00	pcs
60	054132	de: Deckel beschichtet RAL 7012, BW2T 21/26	1.00	pcs
80	054072	de: Haltekonsole BW2T	1.00	pcs
150	054353	de: Seitenwand links BW2T 10/15	1.00	pcs
150	054355	de: Seitenwand links BW2T 21/26	1.00	pcs
130	054359	de: Seitenwand rechts BW2T 10/15	1.00	pcs
130	054360	de: Seitenwand rechts BW2T 21/26	1.00	pcs
140	054075	de: Seitenwand rechts oben BW2T 10/15	1.00	pcs
140	054325	de: Seitenwand rechts oben BW2T 21/26	1.00	pcs
160	054077	de: Türlager oben BW2T	1.00	pcs
170	054076	de: Türlager unten BW2T	1.00	pcs
190	054441	de: Verkleidungstür kpl. BW2T	1.00	pcs
180	018309	Disc 5 DIN134	1.00	pcs
210	015507	Dog point screw	1.00	pcs
100	047891	Driver	1.00	pcs

Cladding (A000133)

Item no.	Article no.	Description	Quantity	Unit
110	031549	Hexagon screw M6x12 DIN 7500	1.00	pcs
90	001009	INF8 MES INFINITY InfoWIN Touch	1.00	pcs
200	047892	Locking plate	1.00	pcs
70	012256	Turning bolt	1.00	pcs

Control panel (A000131)

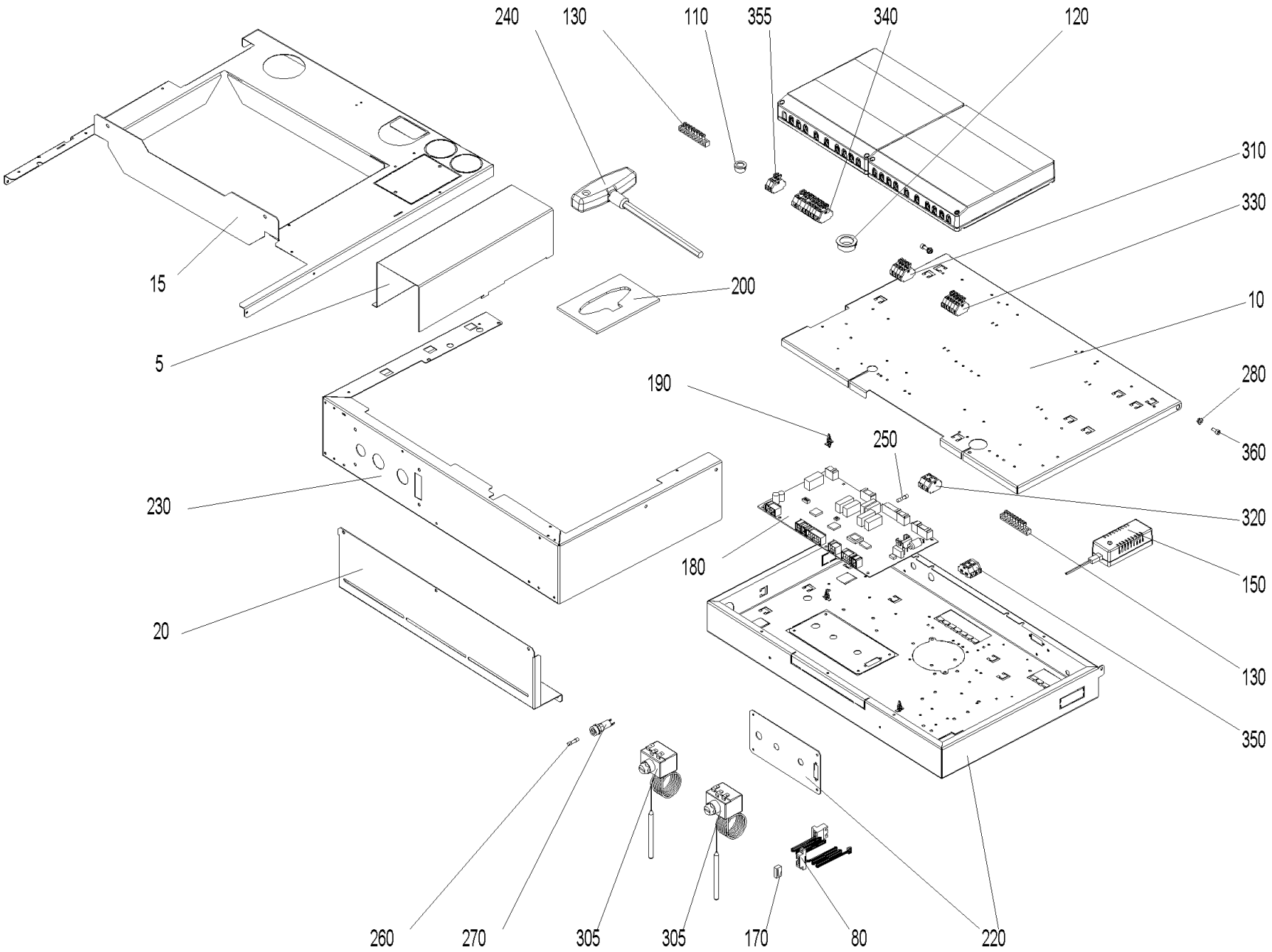

Control panel (A000131)

Item no.	Article no.	Description	Quantity	Unit
260	003228	6.3A fuse (not illustrated)	1.00	pcs
110	009542	Cable feed-through	1.00	pcs
370	018140	Cylinder screw 4.2x13 DIN7981ST (not illustrated)	1.00	pcs
5	054093	de: Abdeckung Kabelkanal BW2 10/15, BW2T 10/15	1.00	pcs
5	054334	de: Abdeckung Kabelkanal BW2 21/26, BW2T 21/26	1.00	pcs
10	053779	de: Deckel Schaltfeld BW2T, LWPT	1.00	pcs
15	054090	de: Haltekonsole Schaltfeld 10/15 BW2T	1.00	pcs
15	054097	de: Haltekonsole Schaltfeld 21/26 BW2	1.00	pcs
80	009605	de: Kabel - LON LWPT, BWXL2, BW2, BW2T	1.00	pcs
90	050976	de: Kabelbaum 12V BW2, BW2T	1.00	pcs
30	054294	de: Kabelbaum 230V BW2T	1.00	pcs
100	054296	de: Kabelbaum AAT+HFR BW2T	1.00	pcs
120	009536	de: Kabeldurchführung 2160 schwarz Ø 28	1.00	pcs
40	054292	de: Kabel Netz BW2T	1.00	pcs
50	054291	de: Kabel Saugturbine BW2T	1.00	pcs
60	054293	de: Kabel Saugzuggebläse BW2T	1.00	pcs
70	054290	de: Kabel STB BW2T	1.00	pcs
180	012016	de: Platine Feuerungsautomat FMP BW2T 33KW	1.00	pcs
200	054438	de: Position Sechskantsch. BW2T	1.00	pcs
230	054089	de: Schaltfeld Boden BW2T	1.00	pcs
220	052994	de: Schaltfeld Unterteil BW2T, LWPT	1.00	pcs
280	016564	de: Sperrzahnmutter M4 verzinkt	1.00	pcs

Control panel (A000131)

Item no.	Article no.	Description	Quantity	Unit
300	007624	de: Thermoelement 2AB NM30/110 mm TI/DI 2AB25 2,5 (Brennkammer- bzw. Thermocontrollfühler) Länge - Anschlußkabel 900mm	1.00	pcs
310	006835	de: Wagoblock 261 5tlg."ext. Wärme" 1-4 PMX, BW2T, LWPT	1.00	pcs
360	016782	de: Zylinderschraube m. Innensechskant ISO 4762 - M 4 x 10 - 8.8 - verzinkt (DIN 912)	1.00	pcs
250	006900	Fuse 1 A T 5x20 ceramic tube	1.00	pcs
270	003663	Fuse holder	1.00	pcs
240	027392	Hexagon pin key with T-handle 10x200 for VarioWIN, BioWIN XL 35-60	1.00	pcs
210	007629	Immersion sensor PT 1000 (not illustrated)	1.00	pcs
290	502186	MES009M Immersion sensor	1.00	pcs
140	018190	Oval-head screw 3.2x16 (not illustrated)	1.00	pcs
180	011990	PCB, FMP BW2	1.00	pcs
190	007609	PCB holder	1.00	pcs
170	005784	Pin connector (not illustrated)	1.00	pcs
150	051645	Power supply unit 12V	1.00	pcs
20	048902	Retaining plate	1.00	pcs
130	009929	Terminal bar MS 8-pin 8x8mm for VarioWIN,FireWIN, BioWIN XL 35-60	1.00	pcs
305	005672	Thermostat LS1+100-6U	1.00	pcs
330	006719	Wago terminal block 261 6-pce. heating requirement/probe switching for BioWIN 10-26, BioWIN XL 35-60 (*not illustrated)	1.00	pcs
355	009948	Wago terminal block 261; 2-pin WMS 1-2, 3-piece for VarioWIN, FireWIN	1.00	pcs
350	006833	Wago terminal block 261; 4-pin "12V GND"	1.00	pcs
320	006834	Wago terminal block 261; 4-pin "safety 1-4"	1.00	pcs
340	009891	Wago terminal block 261; 11-pin safety 1-11 for FireWIN, VarioWIN	1.00	pcs

Heating surface cleaning (BW2-HFR+BW2-HFR)

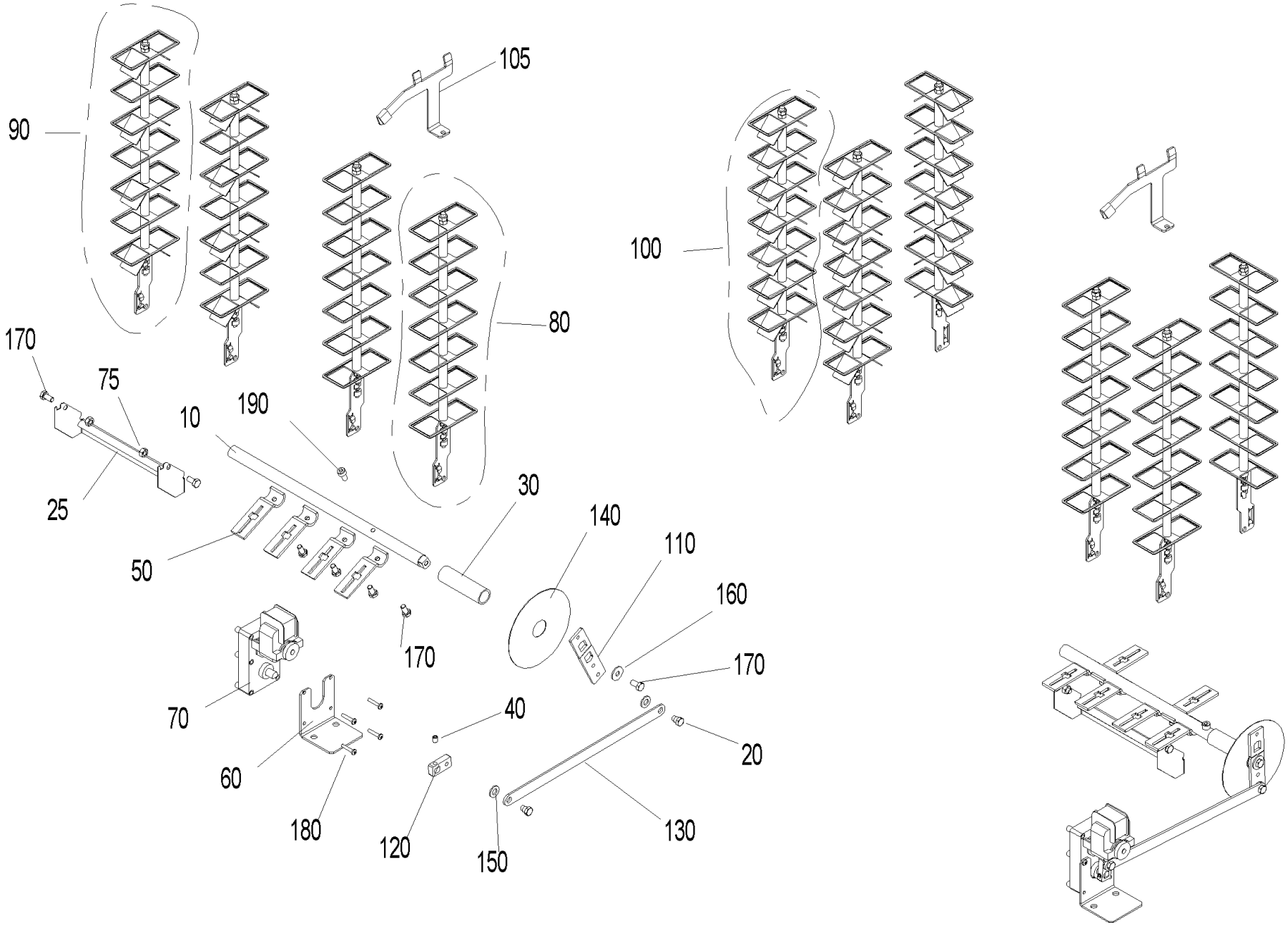

Heating surface cleaning (BW2-HFR+BW2-HFR)

Item no.	Article no.	Description	Quantity	Unit
25	051624	Ash sheet	1.00	pcs
10	048882	Axle heating surface BW2 10-26	1.00	pcs
105	051076	Cleaning plate for combustion chamber	1.00	pcs
80	051609	Clearer flat	1.00	pcs
100	051611	Clearer flat with turbulator	1.00	pcs
90	051610	Clearer flat with turbulator	1.00	pcs
20	012502	Collar screw	1.00	pcs
180	016837	Cylinder screw M5x25 ISO 7045	1.00	pcs
190	016773	Cylinder screw M8x16 ISO 4762	1.00	pcs
140	051122	Disc	1.00	pcs
160	031755	Disc 8 ISO 7093	1.00	pcs
150	024780	Disc 10 ISO7089	1.00	pcs
30	048980	Distance rod	1.00	pcs
170	016721	Hexagon screw M8x16 DIN 933	1.00	pcs
60	051121	L-bracket, motor HFR	1.00	pcs
50	051547	Lever for cleaning heating surfaces	1.00	pcs
70	044665	Motor	1.00	pcs
75	015992	Nut M8 DIN 934 V2 - LogWIN Klassik pellet ready	1.00	pcs
40	033112	Setscrew M8x10 DIN916	1.00	pcs
110	048884	Shaker lever 1	1.00	pcs
120	048885	Shaker lever 2	1.00	pcs
130	051367	Shaker lever 3	1.00	pcs

Pellet hopper (A000130)

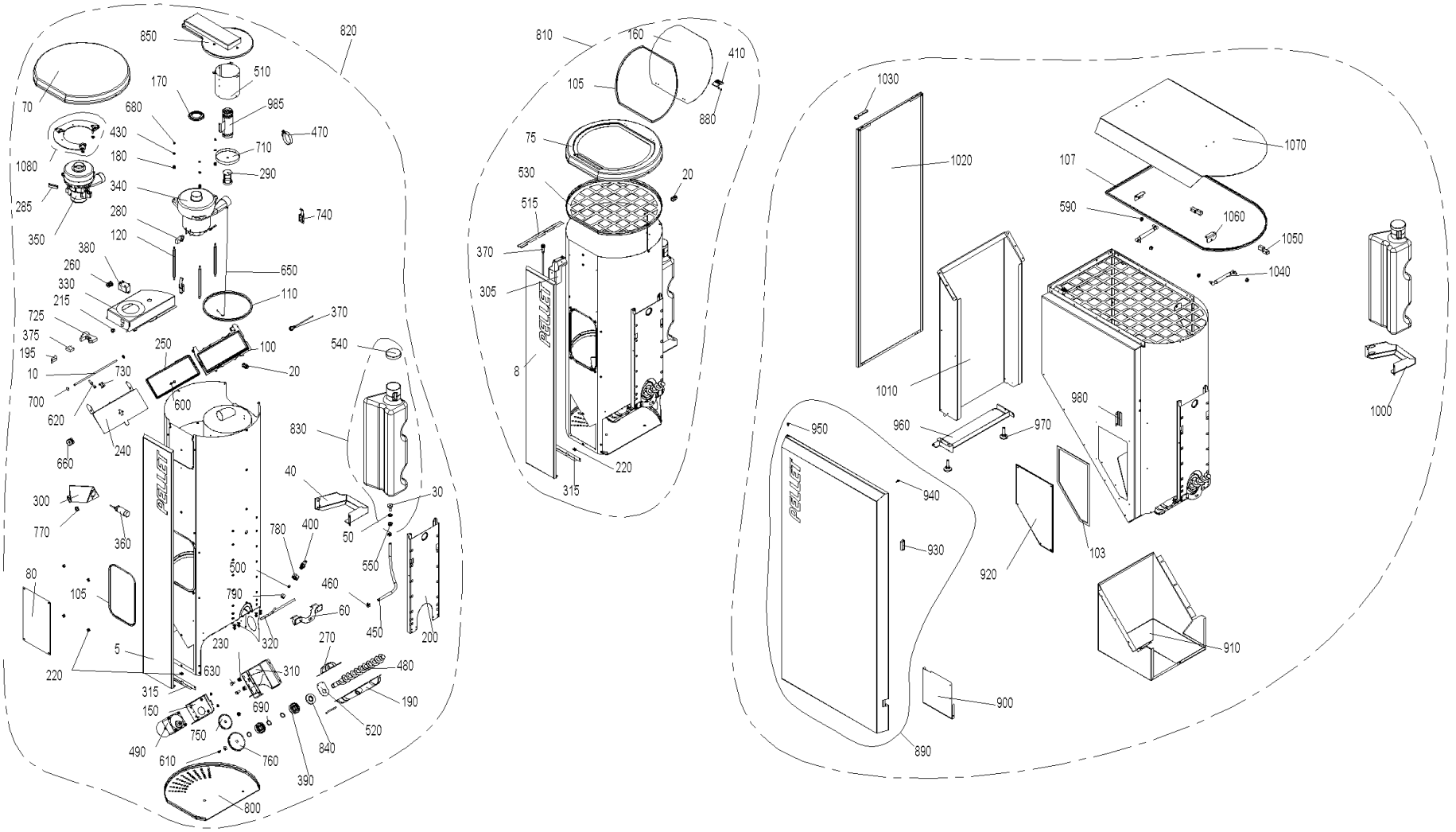

Pellet hopper (A000130)

Item no.	Article no.	Description	Quantity	Unit
330	050866	Air duct	1.00	pcs
480	051544	Auger	1.00	pcs
310	048891	Auger motor bracket	1.00	pcs
490	050901	Auger motor SPG	1.00	pcs
320	050867	Back-burn safeguard lead	1.00	pcs
725	005043	Base for relay	1.00	pcs
810	054409	BIO91T Reserve supply container for BW2 T Klassik	1.00	pcs
340	044667	Blower motor 122151-12 for feed Conversion instructions for use with PMX 15-26 are enclosed! for BioWIN 10-26, PMX,BioWIN XL 35-6	1.00	pcs
170	031253	Blower seal	1.00	pcs
195	005077	Bracket	1.00	pcs
400	042510	Burn-back protection completely assembled for PMX, BioWIN 10-26	1.00	pcs
380	005067	BW2 Relay 30A 250V	1.00	pcs
650	031258	Cable	1.00	pcs
215	009542	Cable feed-through	1.00	pcs
210	045048	Cable feed with relay	1.00	pcs
660	031261	Cable pulley	1.00	pcs
220	051388	Cage nut M5	1.00	pcs
230	051112	Cage nut M8	1.00	pcs
280	006859	Carbon brushes for blower motor	1.00	pcs
130	051386	Cheese head screw M5x10 Taptite	1.00	pcs
270	048967	Clamp collar	1.00	pcs
730	045952	Clamping piece for cable	1.00	pcs

Pellet hopper (A000130)

Item no.	Article no.	Description	Quantity	Unit
103	046665	Container seal	1.00	pcs
670	031096	Countersinking screw M4x20 DIN965 gv KS (not illustrated)	1.00	pcs
910	051755	CoverPB BioWIN2	1.00	pcs
500	006378	Cutting ring DL8 07-151	1.00	pcs
850	053466	Cyclone cover	1.00	pcs
850	046166	Cyclone cover, fully sealed, new ET for BioWIN 10-26 from batch 30	1.00	pcs
860	019836	Cylinder screw 2.9x16 (not illustrated)	1.00	pcs
870	018139	Cylinder screw 4.2x13 DIN7981SP (not illustrated)	1.00	pcs
880	016768	Cylinder screw M3x5	1.00	pcs
950	004237	Cylinder screw M5x10 ISO 4762 (not illustrated)	1.00	pcs
80	050868	de: +Deckel Vorratsbehälter BW2	1.00	pcs
8	054363	de: Abdeckblende Pelletsbehälter Klassik BW2T	1.00	pcs
5	054361	de: Abdeckblende Pelletsbehälter Premium BW2T	1.00	pcs
820	054408	de: BIO92T Pelletsbehälter BW2 T Premium/Exklusiv (für Sauglängen bis 25m)	1.00	pcs
900	054350	de: Blende PB Basaltgrau BW2T	1.00	pcs
70	054346	de: Deckel Pelletsbehälter BW2T	1.00	pcs
1070	054365	de: Deckel Pelletsbehälter BW2T	1.00	pcs
75	054348	de: Deckel Pelletsbehälter Klassik BW2T	1.00	pcs
140	053887	de: Flachkopfschraube 5x10	1.00	pcs
160	054349	de: Fülldeckel Basaltgrau BW2T	1.00	pcs
285	054653	de: Kohlebürstenset (2Stk.) zu Motor-Saugturbine 230V ebetec für Pellets-Zuführung 15m BW2T	1.00	pcs
300	048970	de: Konsole Näherungsschalter BW2T	1.00	pcs

Pellet hopper (A000130)

Item no.	Article no.	Description	Quantity	Unit
315	054424	de: L-Wi. Abdeckblende BW2T	1.00	pcs
350	006242	de: Motor -Saugturbine 15m, 230V, 1450W BW2T	1.00	pcs
360	007635	de: Näherungsschalter kapazitiv EC 3025 NPAPL mit Anschlußkabel 0,3m	1.00	pcs
520	048971	de: Schutzblech für Pelletsschnecke BW2, BW2T	1.00	pcs
1020	054352	de: Seitenwand links Pelletsbehälter BW2T	1.00	pcs
1030	051752	de: Türlager oben Pelletsbehälter BW2T	1.00	pcs
890	054439	de: Verkleidungstür PB BW2T	1.00	pcs
1080	054449	de: Zwischenplatte Gebläse montiert BW2, BW2T	1.00	pcs
430	018309	Disc 5 DIN134	1.00	pcs
440	031753	Disc 6 ISO 7093	1.00	pcs
120	031256	Distance bolt	1.00	pcs
960	051753	Door mounting, bottom	1.00	pcs
60	048974	Fastening bracket	1.00	pcs
10	042452	Feed axle	1.00	pcs
150	051114	Flange, auger motor	1.00	pcs
250	031257	Flap seal	1.00	pcs
1040	012600	Gas spring 4534DS 0100 N	1.00	pcs
770	003208	Grommet 10x17.5x1.2	1.00	pcs
390	012499	Grooved ball bearing	1.00	pcs
190	053540	Half-collar auger tube	1.00	pcs
570	016586	Hexagon nut M5 DIN 934	1.00	pcs
560	016565	Hexagon nut M5 with flange and gearing (not illustrated)	1.00	pcs

Pellet hopper (A000130)

Item no.	Article no.	Description	Quantity	Unit
580	016594	Hexagon nut M6 DIN 934	1.00	pcs
590	016553	Hexagon nut M8 with flange and gearing	1.00	pcs
550	016567	Hexagon nut M10 with flange and gearing (not illustrated)	1.00	pcs
600	031545	Hexagon screw M5x12 DIN 7500 (not ilustrated)	1.00	pcs
610	017051	Hexagon screw M6x12 DIN 933 (not illustrated)	1.00	pcs
620	021504	Hexagon screw M6x45 DIN933	1.00	pcs
630	015134	Hexagon screw M8x16 DIN 933	1.00	pcs
640	017086	Hexagon screw M8x20 DIN 933 (not illustrated)	1.00	pcs
410	050990	Hinge M345	1.00	pcs
450	008915	Hose 7x2	1.00	m
470	006875	Hose clip 40-60	1.00	pcs
460	006874	Hose clip ABA 11	1.00	pcs
1060	051751	L-bracket	1.00	pcs
970	009990	Leg M10 x 40	1.00	pcs
690	016171	Locking ring Ø20x1.2	1.00	pcs
680	016727	Lock nut M5	1.00	pcs
700	006897	Lock washer Ø 6	1.00	pcs
930	001760	Magnetic lock, black - VW, LWP18-50, LWK	1.00	pcs
980	051773	Magnetic sheet	1.00	pcs
920	051754	Maintenance cover BioWIN2	1.00	pcs
20	006340	Mount connections PG9	1.00	pcs
375	005026	OKE9281 Cable protection plate	1.00	pcs

Pellet hopper (A000130)

Item no.	Article no.	Description	Quantity	Unit
510	045951	Partition plate	1.00	pcs
510	052480	Partition plate	1.00	pcs
1010	051614	Pedestal	1.00	pcs
800	048986	Pellet container cladding	1.00	pcs
290	042035	Piston	1.00	pcs
540	051397	Protection cover GPN 690	1.00	pcs
515	051790	Protection plate for cable BW2	1.00	pcs
305	051786	Proximity switch bracket lid	1.00	pcs
370	006832	Proximity switch M12, inductive	1.00	pcs
240	045955	Receptacle flap	1.00	pcs
105	053465	Reserve supply container seal	1.00	pcs
200	048976	Retaining bracket, pellet tank	1.00	pcs
180	009559	Rubber grommet DK 6-9-12-7	1.00	pcs
100	031254	Seal frame	1.00	pcs
107	053467	Seal profile reserve supply container 200 kg	1.00	pcs
110	042232	Seal section	1.00	pcs
840	048903	Shaft seal ring DIN 3760AS AD52 ID20	1.00	pcs
710	045949	Sieve with eye	1.00	pcs
940	000299	Silicone buffer	1.00	pcs
1050	044802	Southco hinge	1.00	pcs
740	009546	Spring lock	1.00	pcs
750	050869	Spur gear M2 Z36	1.00	pcs

Pellet hopper (A000130)

Item no.	Article no.	Description	Quantity	Unit
760	045771	Spur gear M2 Z45	1.00	pcs
985	052482	Suction pipe	1.00	pcs
50	006851	Support plate, motor	1.00	pcs
260	000965	Terminal, 3-pin	1.00	pcs
420	018058	U-washer	1.00	pcs
780	013749	Union nut 3/8"	1.00	pcs
790	006351	Union nut ML8 GV	1.00	pcs
30	006877	Water connection	1.00	pcs
830	050379	Water tank	1.00	pcs
40	051107	Water tank support	1.00	pcs
1000	051771	Water tank support	1.00	pcs

Ash conveyor (A000132)

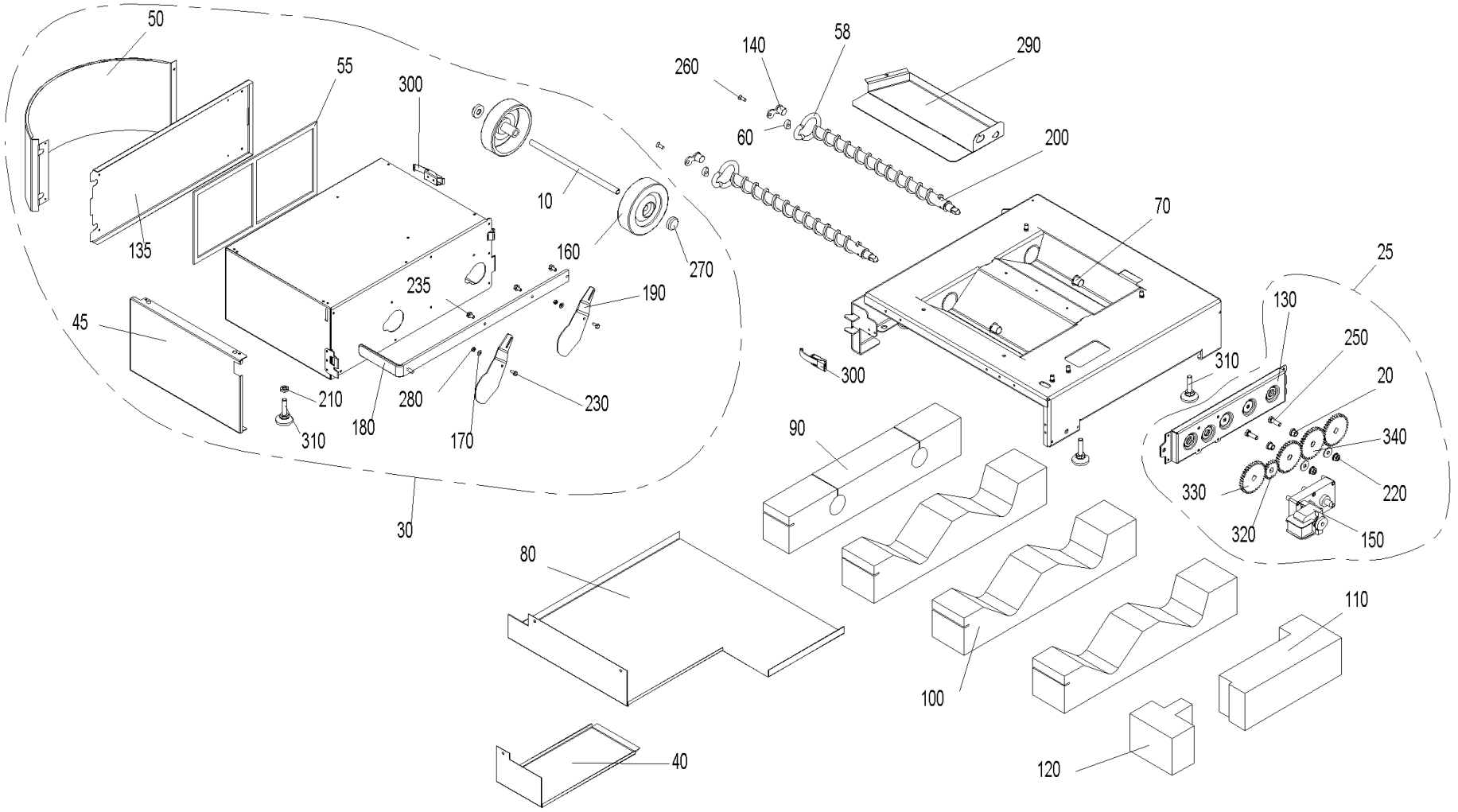

Ash conveyor (A000132)

Item no.	Article no.	Description	Quantity	Unit
10	051379	Ash box axle	1.00	pcs
290	050692	Ash box base	1.00	pcs
135	051635	Ash box flap	1.00	pcs
100	051127	Ash chamfer insulation	1.00	pcs
20	006745	Ash conveyor bearing bush	1.00	pcs
130	048572	Ash conveyor bracket	1.00	pcs
90	051126	Ash pipe insulation	1.00	pcs
25	054418	Ash removal, completely pre- mounted, BioWIN2	1.00	pcs
200	051542	Auger	1.00	pcs
140	051120	Auger bearing	1.00	pcs
30	054414	BIO90T Ash box, cpl for BWE102-262 T	1.00	pcs
55	046665	Container seal	1.00	pcs
260	016863	Countersinking screw M6x16	1.00	pcs
40	051125	Cover for ash conveyor motor	1.00	pcs
80	051124	Cup insulation	1.00	pcs
45	054342	de: Blende Aschebox BW2T	1.00	pcs
50	054343	de: Blende Aschebox rund BW2T	1.00	pcs
58	054679	de: Dichtung Flansch BW2	1.00	pcs
180	054444	de: Schieberblech BW2T	1.00	pcs
170	018309	Disc 5 DIN134	1.00	pcs
60	048573	Distance	1.00	pcs
70	012508	Friction bearing with connector	1.00	pcs

Ash conveyor (A000132)

Item no.	Article no.	Description	Quantity	Unit
220	016553	Hexagon nut M8 with flange and gearing	1.00	pcs
210	031156	Hexagon nut M10 DIN 439	1.00	pcs
230	031545	Hexagon screw M5x12 DIN 7500 (not ilustrated)	1.00	pcs
235	031549	Hexagon screw M6x12 DIN 7500	1.00	pcs
240	017086	Hexagon screw M8x20 DIN 933 (not illustrated)	1.00	pcs
250	017191	Hexagon screw M8x25 DIN 933	1.00	pcs
310	009990	Leg M10 x 40	1.00	pcs
280	016727	Lock nut M5	1.00	pcs
150	044665	Motor	1.00	pcs
120	051129	Motor insulation, front	1.00	pcs
110	051128	Motor insulation, rear	1.00	pcs
190	050686	Sliding plate	1.00	pcs
300	009546	Spring lock	1.00	pcs
320	047543	Spur gear M2 Z20	1.00	pcs
330	050869	Spur gear M2 Z36	1.00	pcs
340	048566	Spur gear M2 Z36 Ø12	1.00	pcs
270	006889	Washer Ø12	1.00	pcs
160	006888	Wheel AG 125-12	1.00	pcs

Boiler (BW2-K+BW2-K)

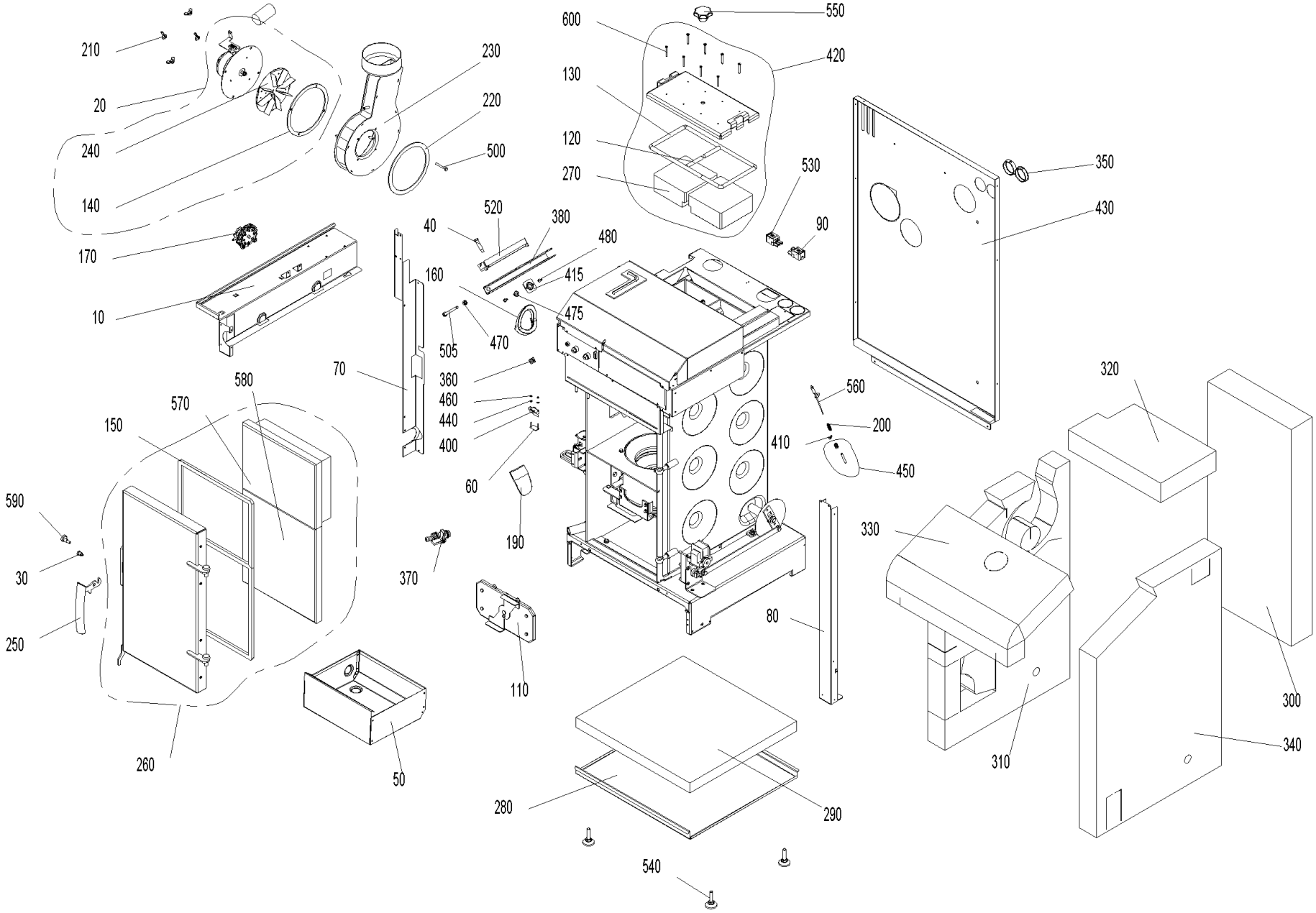

Boiler (BW2-K+BW2-K)

Item no.	Article no.	Description	Quantity	Unit
50	048928	Ash pan	1.00	pcs
160	048926	Auger tube seal	1.00	pcs
30	048881	Axle for door handle CK45	1.00	pcs
230	053234	Blower box for BioWIN102-262	1.00	pcs
140	051006	Blower box seal	1.00	pcs
220	051005	Blower seal	1.00	pcs
240	052951	Blower wheel Ø160 x 25 for BioWIN2 102 - 262	1.00	pcs
250	007480	Boiler handle	1.00	pcs
580	050447	Bottom door stone	1.00	pcs
350	004096	Cable feed-through 2400 black Ø50	2.00	pcs
360	051112	Cage nut M8	1.00	pcs
520	048975	Clamping rail	1.00	pcs
420	050477	Cleaning cover, complete	1.00	pcs
420	048870	Cleaning cover, complete	1.00	pcs
110	051056	Coasting surface cover, complete	1.00	pcs
320	048910	Coasting surface insulation	1.00	pcs
40	013813	Collar screw	1.00	pcs
200	050647	Combustion chamber sensor spring	1.00	pcs
70	051109	Cover, left	1.00	pcs
80	048609	Cover, right	1.00	pcs
10	050918	Cover plate	1.00	pcs
280	048863	Cup insulation 10-26 K BW2	1.00	pcs

Boiler (BW2-K+BW2-K)

Item no.	Article no.	Description	Quantity	Unit
600	016719	Cylinder drilling screw 4.2 x 38 DIN7504	8.00	pcs
10	048991	de: Abdeckblech BW2 21/26 BW2T	1.00	pcs
20	054674	de: Abgasgebläse inkl. Dichtung BW2-33KW, BW2-XL	1.00	pcs
140	054673	de: Dichtung Gebläsekasten BW2 33	1.00	pcs
230	054672	de: Gebläsekasten inkl. Dichtung BW2 33KW	1.00	pcs
240	054460	de: Gebläserad Ø210 33-62kW BW2T	1.00	pcs
320	048958	de: Glasfilz 22kg/m³ mit Glasseide	1.00	pcs
310	054455	de: Isolierung links BW2 33kW	1.00	pcs
310	051117	de: Isolierung links mit fadenverstärktem Vlies (natur) Glasfaser 22kg/m³	1.00	pcs
340	048907	de: Isolierung re Glasfilz 22kg/m³ mit Vlies einseitig	1.00	pcs
430	054851	de: Rückwand Kessel ET BioWIN2 und BioWIN2T 10/15 kW	1.00	pcs
430	054853	de: Rückwand Kessel ET BioWIN2 und BioWIN2T 21/26 kW	1.00	pcs
170	045404	Differential pressure watchdog	1.00	pcs
440	021474	Disc 3 DIN134	2.00	pcs
570	048914	Door stone	1.00	pcs
190	048921	Down chute	1.00	pcs
410	031274	Eyelet M6	1.00	pcs
60	051045	Fastened microswitch, complete	1.00	pcs
290	048864	Floor insulation	2.00	pcs
20	053010	Flue gas blower	1.00	pcs
260	051545	Heating door cpl. mounted	1.00	pcs
150	048916	Heating door seal	1.00	pcs

Boiler (BW2-K+BW2-K)

Item no.	Article no.	Description	Quantity	Unit
460	016551	Hexagon nut M3 DIN 934	2.00	pcs
475	016553	Hexagon nut M8 with flange and gearing	1.00	pcs
480	031545	Hexagon screw M5x12 DIN 7500 (not ilustrated)	1.00	pcs
500	021504	Hexagon screw M6x45 DIN933	4.00	pcs
505	016461	Hexagon screw M8x80 DIN 933	1.00	pcs
270	050636	Insulating stone for cleaning cover	2.00	pcs
270	051007	Insulating stone for cleaning cover	2.00	pcs
370	004385	KFE cock	1.00	pcs
310	051119	Left insulation	1.00	pcs
540	009990	Leg M10 x 40	4.00	pcs
590	051004	Locking pin	1.00	pcs
400	007632	Microswitch with lever	1.00	pcs
470	015992	Nut M8 DIN 934 V2 - LogWIN Klassik pellet ready	1.00	pcs
380	048611	Pellet container clamp	1.00	pcs
415	052484	Platelet flanged nut	1.00	pcs
530	070323	Plug, 3-pin, black	1.00	pcs
450	051069	Protective tube for combustion chamber sensor, complete	1.00	pcs
300	051116	Rear insulation	1.00	pcs
340	050924	Right insulation	1.00	pcs
120	051041	Sealing cord, short	2.00	pcs
120	051040	Sealing cord, short	2.00	pcs
130	051034	Sealing cord for cleaning cover	1.00	pcs

Boiler (BW2-K+BW2-K)

Item no.	Article no.	Description	Quantity	Unit
130	051017	Sealing cord for cleaning cover	1.00	pcs
90	070324	Socket, 3-pin, black	1.00	pcs
550	005125	Star handle M12 x 35	1.00	pcs
560	007626	Thermocouple	1.00	pcs
330	048911	Top insulation	1.00	pcs
210	019410	Wing nut M6	4.00	pcs

Burner pot 21-33 (A000027)

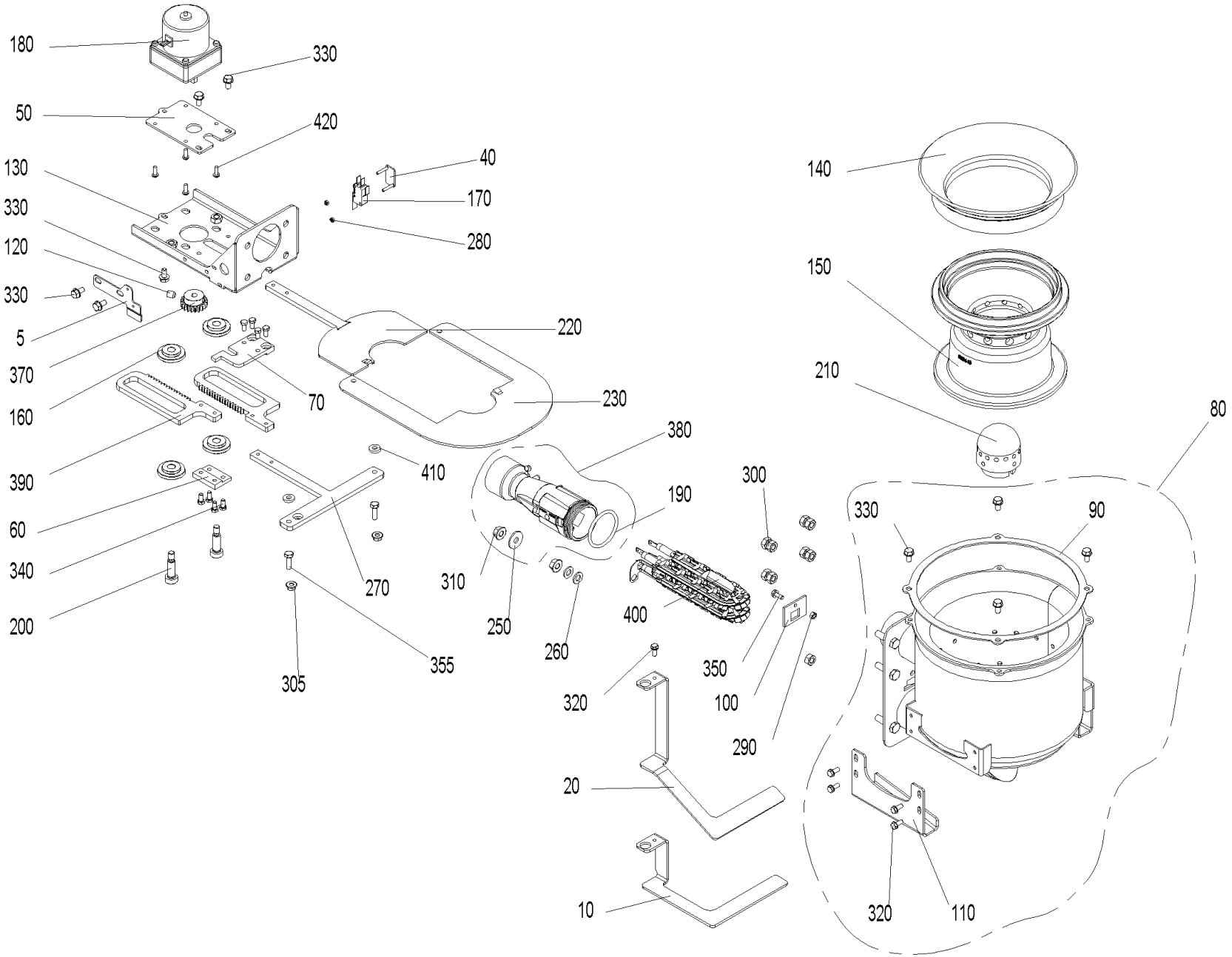

Burner pot 21-33 (A000027)

Item no.	Article no.	Description	Quantity	Unit
20	051046	Ash stop plate, Exclusive	1.00	pcs
10	051048	Ash stop plate, Klassik, Premium	1.00	pcs
160	007125	Bearing for vibrating drive	4.00	pcs
50	050632	Bracket mounting plate	1.00	pcs
80	051065	Burner	1.00	pcs
90	048861	Burner seal	1.00	pcs
125	053643	Cable - ignition element for BW1, BW2, FireWIN and VarioWIN	1.00	pcs
150	048941	Cone, bottom part for BioWIN2 21/26	1.00	pcs
140	050642	Cone, top part 45°	1.00	pcs
420	016780	Cylinder screw M4x12 DIN 7985	4.00	pcs
350	015025	de: Sechskantschraube DIN 933 - M5x16 - 8.8 - verzinkt	1.00	pcs
240	021474	Disc 3 DIN134	2.00	pcs
260	024779	Disc 8 ISO 7089	2.00	pcs
250	031755	Disc 8 ISO 7093	1.00	pcs
100	048841	Driving rod feed-through	1.00	pcs
40	051045	Fastened microswitch, complete	1.00	pcs
220	051051	Grate plate, left	1.00	pcs
230	053539	Grate plate, right	1.00	pcs
110	048842	Grate plate guide	1.00	pcs
270	051023	Grate plate scraper	1.00	pcs
280	016551	Hexagon nut M3 DIN 934	2.00	pcs
290	017035	Hexagon nut M5 DIN 934	1.00	pcs

Burner pot 21-33 (A000027)

Item no.	Article no.	Description	Quantity	Unit
300	031153	Hexagon nut M8 DIN 934	9.00	pcs
310	016553	Hexagon nut M8 with flange and gearing	2.00	pcs
305	016566	Hexagon nut with flange and gearing M6	2.00	pcs
340	016756	Hexagon screw M5x10 DIN 933	4.00	pcs
320	031545	Hexagon screw M5x12 DIN 7500 (not ilustrated)	5.00	pcs
330	031549	Hexagon screw M6x12 DIN 7500	7.00	pcs
355	015471	Hexagon screw M6x20 DIN 933	2.00	pcs
400	055201	Ignition element BioWIN10-26, FireWIN from lot 15, VarioWIN from lot 15 BioWIN XL, LWK	1.00	pcs
402	053851	Ignition element with cable	1.00	pcs
410	051054	Intermediate plate	2.00	pcs
170	007632	Microswitch with lever	1.00	pcs
60	050649	Mounting plate	1.00	pcs
70	051042	Mounting plate, top	1.00	pcs
190	006849	O-ring FPM70 45 x 4	1.00	pcs
210	047774	Primary air pin for BioWIN10-26 FireWIN bis Los9 und PMX 21-26	1.00	pcs
120	033112	Setscrew M8x10 DIN916	1.00	pcs
130	050639	Shake-out bracket	1.00	pcs
180	012561	Shake-out motor	1.00	pcs
200	017048	Shoulder screw M8 10x25 ISO 7379	2.00	pcs
370	007222	Spur gear M1,5; Z21	1.00	pcs
390	048161	Steering rack BioWin2 10-26	2.00	pcs
5	053544	Stop plate	1.00	pcs

Burner pot 21-33 (A000027)

Item no.	Article no.	Description	Quantity	Unit
380	051067	Venturi nozzle	1.00	pcs

Cladding (A000133)

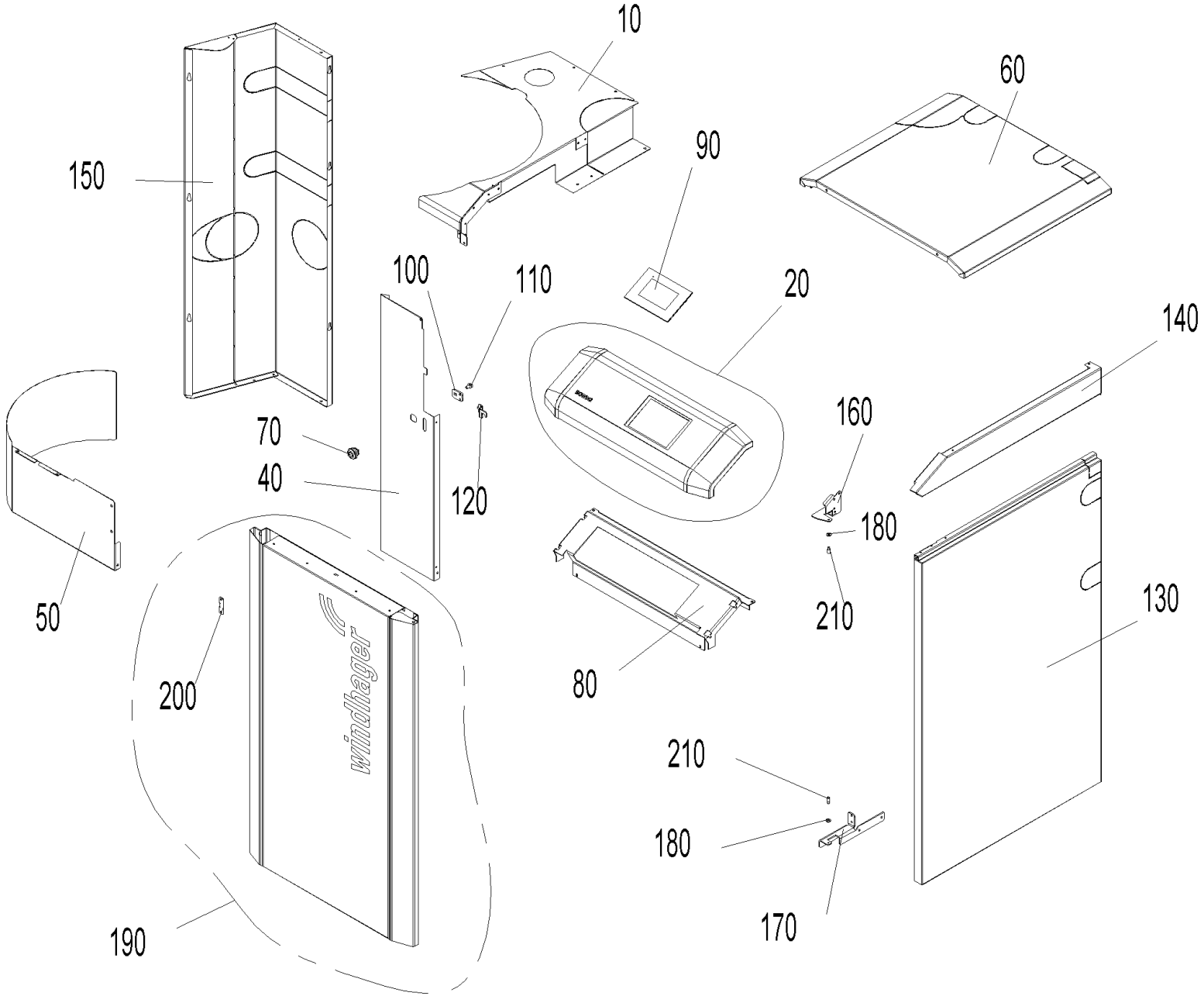

Cladding (A000133)

Item no.	Article no.	Description	Quantity	Unit
120	047893	Clamping plate	1.00	pcs
220	018139	Cylinder screw 4.2x13 DIN7981SP (not illustrated)	1.00	pcs
10	054443	de: Abdeckung hinten links BW2T 10/15	1.00	pcs
10	054442	de: Abdeckung hinten links kpl. BW2T 21/26	1.00	pcs
20	054440	de: Bedienfeld kpl. BW2T	1.00	pcs
40	054356	de: Blende links BW2T	1.00	pcs
50	054344	de: Blende Pelletsbehälter BW2T	1.00	pcs
60	054121	de: Deckel beschichtet RAL 7012, BW2T 10/15	1.00	pcs
60	054132	de: Deckel beschichtet RAL 7012, BW2T 21/26	1.00	pcs
80	054072	de: Haltekonsole BW2T	1.00	pcs
150	054353	de: Seitenwand links BW2T 10/15	1.00	pcs
150	054355	de: Seitenwand links BW2T 21/26	1.00	pcs
130	054359	de: Seitenwand rechts BW2T 10/15	1.00	pcs
130	054360	de: Seitenwand rechts BW2T 21/26	1.00	pcs
140	054075	de: Seitenwand rechts oben BW2T 10/15	1.00	pcs
140	054325	de: Seitenwand rechts oben BW2T 21/26	1.00	pcs
160	054077	de: Türlager oben BW2T	1.00	pcs
170	054076	de: Türlager unten BW2T	1.00	pcs
190	054441	de: Verkleidungstür kpl. BW2T	1.00	pcs
180	018309	Disc 5 DIN134	1.00	pcs
210	015507	Dog point screw	1.00	pcs
100	047891	Driver	1.00	pcs

Cladding (A000133)

Item no.	Article no.	Description	Quantity	Unit
110	031549	Hexagon screw M6x12 DIN 7500	1.00	pcs
90	001009	INF8 MES INFINITY InfoWIN Touch	1.00	pcs
200	047892	Locking plate	1.00	pcs
70	012256	Turning bolt	1.00	pcs

Control panel (A000131)

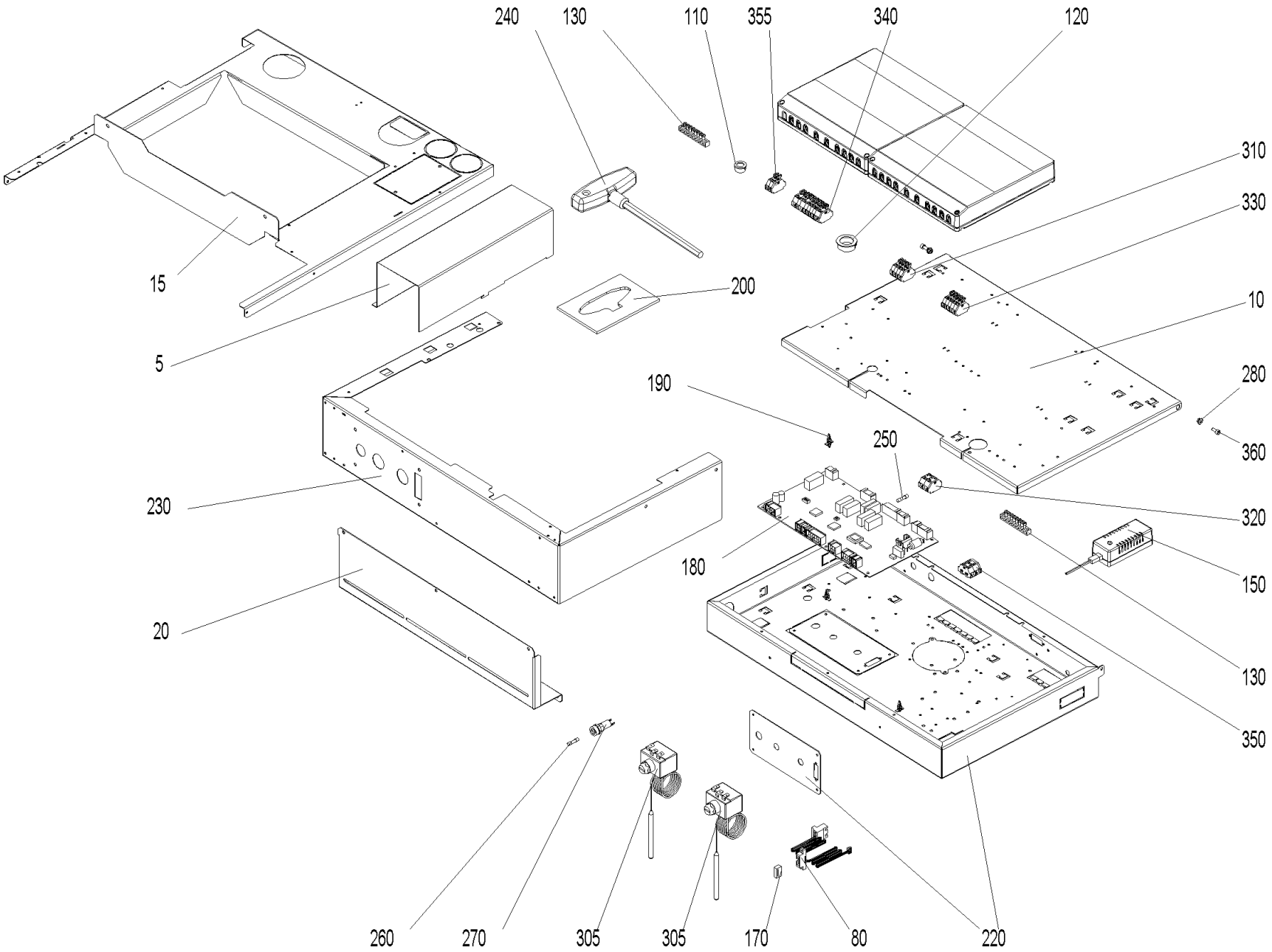

Control panel (A000131)

Item no.	Article no.	Description	Quantity	Unit
260	003228	6.3A fuse (not illustrated)	1.00	pcs
110	009542	Cable feed-through	1.00	pcs
370	018140	Cylinder screw 4.2x13 DIN7981ST (not illustrated)	1.00	pcs
5	054093	de: Abdeckung Kabelkanal BW2 10/15, BW2T 10/15	1.00	pcs
5	054334	de: Abdeckung Kabelkanal BW2 21/26, BW2T 21/26	1.00	pcs
10	053779	de: Deckel Schaltfeld BW2T, LWPT	1.00	pcs
15	054090	de: Haltekonsole Schaltfeld 10/15 BW2T	1.00	pcs
15	054097	de: Haltekonsole Schaltfeld 21/26 BW2	1.00	pcs
80	009605	de: Kabel - LON LWPT, BWXL2, BW2, BW2T	1.00	pcs
90	050976	de: Kabelbaum 12V BW2, BW2T	1.00	pcs
30	054294	de: Kabelbaum 230V BW2T	1.00	pcs
100	054296	de: Kabelbaum AAT+HFR BW2T	1.00	pcs
120	009536	de: Kabeldurchführung 2160 schwarz Ø 28	1.00	pcs
40	054292	de: Kabel Netz BW2T	1.00	pcs
50	054291	de: Kabel Saugturbine BW2T	1.00	pcs
60	054293	de: Kabel Saugzuggebläse BW2T	1.00	pcs
70	054290	de: Kabel STB BW2T	1.00	pcs
180	012016	de: Platine Feuerungsautomat FMP BW2T 33KW	1.00	pcs
200	054438	de: Position Sechskantsch. BW2T	1.00	pcs
230	054089	de: Schaltfeld Boden BW2T	1.00	pcs
220	052994	de: Schaltfeld Unterteil BW2T, LWPT	1.00	pcs
280	016564	de: Sperrzahnmutter M4 verzinkt	1.00	pcs

Control panel (A000131)

Item no.	Article no.	Description	Quantity	Unit
300	007624	de: Thermoelement 2AB NM30/110 mm TI/DI 2AB25 2,5 (Brennkammer- bzw. Thermocontrollfühler) Länge - Anschlußkabel 900mm	1.00	pcs
310	006835	de: Wagoblock 261 5tlg."ext. Wärme" 1-4 PMX, BW2T, LWPT	1.00	pcs
360	016782	de: Zylinderschraube m. Innensechskant ISO 4762 - M 4 x 10 - 8.8 - verzinkt (DIN 912)	1.00	pcs
250	006900	Fuse 1 A T 5x20 ceramic tube	1.00	pcs
270	003663	Fuse holder	1.00	pcs
240	027392	Hexagon pin key with T-handle 10x200 for VarioWIN, BioWIN XL 35-60	1.00	pcs
210	007629	Immersion sensor PT 1000 (not illustrated)	1.00	pcs
290	502186	MES009M Immersion sensor	1.00	pcs
140	018190	Oval-head screw 3.2x16 (not illustrated)	1.00	pcs
180	011990	PCB, FMP BW2	1.00	pcs
190	007609	PCB holder	1.00	pcs
170	005784	Pin connector (not illustrated)	1.00	pcs
150	051645	Power supply unit 12V	1.00	pcs
20	048902	Retaining plate	1.00	pcs
130	009929	Terminal bar MS 8-pin 8x8mm for VarioWIN,FireWIN, BioWIN XL 35-60	1.00	pcs
305	005672	Thermostat LS1+100-6U	1.00	pcs
330	006719	Wago terminal block 261 6-pce. heating requirement/probe switching for BioWIN 10-26, BioWIN XL 35-60 (*not illustrated)	1.00	pcs
355	009948	Wago terminal block 261; 2-pin WMS 1-2, 3-piece for VarioWIN, FireWIN	1.00	pcs
350	006833	Wago terminal block 261; 4-pin "12V GND"	1.00	pcs
320	006834	Wago terminal block 261; 4-pin "safety 1-4"	1.00	pcs
340	009891	Wago terminal block 261; 11-pin safety 1-11 for FireWIN, VarioWIN	1.00	pcs

Heating surface cleaning (BW2-HFR+BW2-HFR)

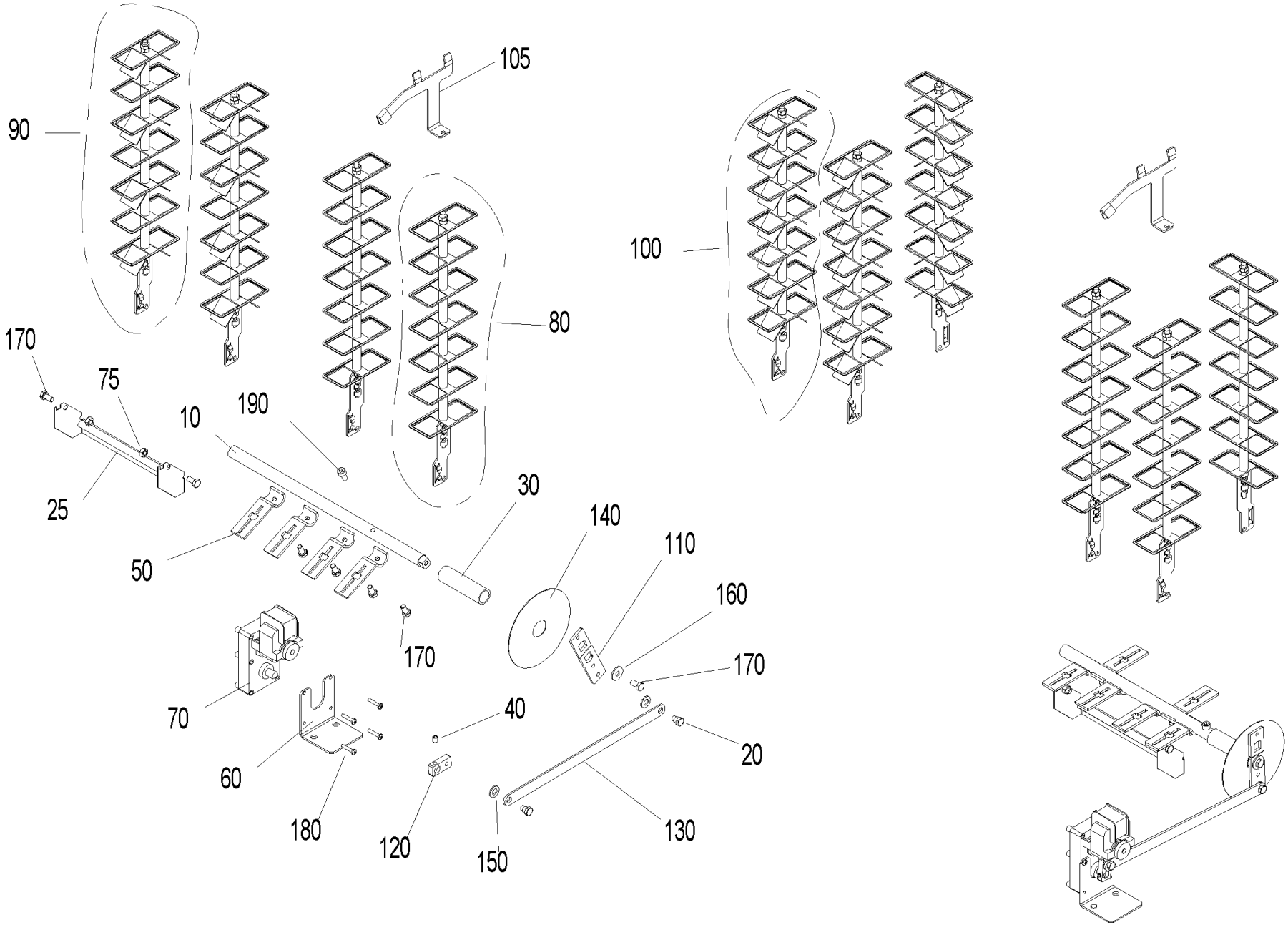

Heating surface cleaning (BW2-HFR+BW2-HFR)

Item no.	Article no.	Description	Quantity	Unit
25	051624	Ash sheet	1.00	pcs
10	048882	Axle heating surface BW2 10-26	1.00	pcs
105	051076	Cleaning plate for combustion chamber	1.00	pcs
80	051609	Clearer flat	1.00	pcs
100	051611	Clearer flat with turbulator	1.00	pcs
90	051610	Clearer flat with turbulator	1.00	pcs
20	012502	Collar screw	1.00	pcs
180	016837	Cylinder screw M5x25 ISO 7045	1.00	pcs
190	016773	Cylinder screw M8x16 ISO 4762	1.00	pcs
140	051122	Disc	1.00	pcs
160	031755	Disc 8 ISO 7093	1.00	pcs
150	024780	Disc 10 ISO7089	1.00	pcs
30	048980	Distance rod	1.00	pcs
170	016721	Hexagon screw M8x16 DIN 933	1.00	pcs
60	051121	L-bracket, motor HFR	1.00	pcs
50	051547	Lever for cleaning heating surfaces	1.00	pcs
70	044665	Motor	1.00	pcs
75	015992	Nut M8 DIN 934 V2 - LogWIN Klassik pellet ready	1.00	pcs
40	033112	Setscrew M8x10 DIN916	1.00	pcs
110	048884	Shaker lever 1	1.00	pcs
120	048885	Shaker lever 2	1.00	pcs
130	051367	Shaker lever 3	1.00	pcs

Pellet hopper (A000130)

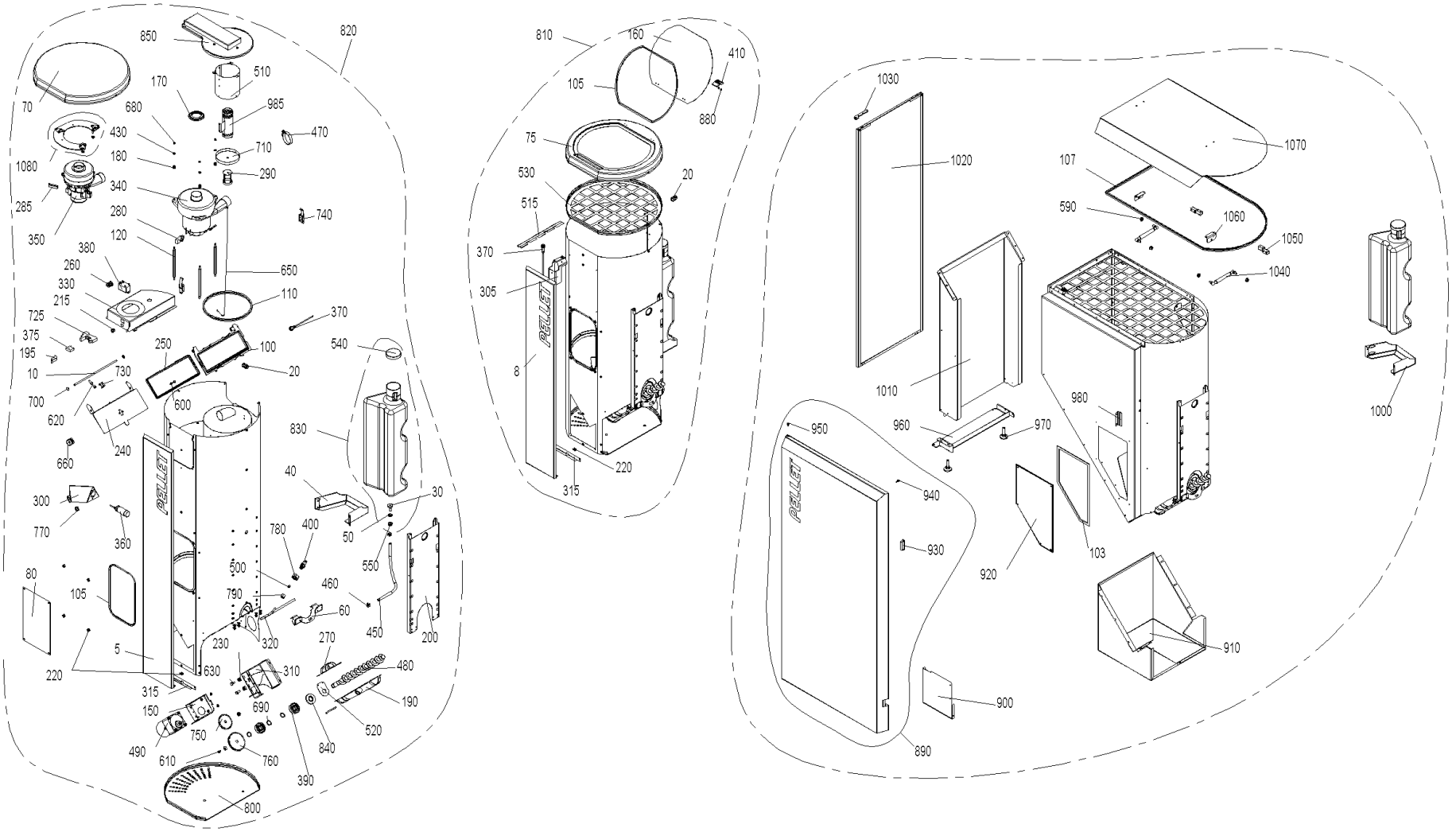

Pellet hopper (A000130)

Item no.	Article no.	Description	Quantity	Unit
330	050866	Air duct	1.00	pcs
480	051544	Auger	1.00	pcs
310	048891	Auger motor bracket	1.00	pcs
490	050901	Auger motor SPG	1.00	pcs
320	050867	Back-burn safeguard lead	1.00	pcs
725	005043	Base for relay	1.00	pcs
810	054409	BIO91T Reserve supply container for BW2 T Klassik	1.00	pcs
340	044667	Blower motor 122151-12 for feed Conversion instructions for use with PMX 15-26 are enclosed! for BioWIN 10-26, PMX,BioWIN XL 35-6	1.00	pcs
170	031253	Blower seal	1.00	pcs
195	005077	Bracket	1.00	pcs
400	042510	Burn-back protection completely assembled for PMX, BioWIN 10-26	1.00	pcs
380	005067	BW2 Relay 30A 250V	1.00	pcs
650	031258	Cable	1.00	pcs
215	009542	Cable feed-through	1.00	pcs
210	045048	Cable feed with relay	1.00	pcs
660	031261	Cable pulley	1.00	pcs
220	051388	Cage nut M5	1.00	pcs
230	051112	Cage nut M8	1.00	pcs
280	006859	Carbon brushes for blower motor	1.00	pcs
130	051386	Cheese head screw M5x10 Taptite	1.00	pcs
270	048967	Clamp collar	1.00	pcs
730	045952	Clamping piece for cable	1.00	pcs

Pellet hopper (A000130)

Item no.	Article no.	Description	Quantity	Unit
103	046665	Container seal	1.00	pcs
670	031096	Countersinking screw M4x20 DIN965 gv KS (not illustrated)	1.00	pcs
910	051755	CoverPB BioWIN2	1.00	pcs
500	006378	Cutting ring DL8 07-151	1.00	pcs
850	053466	Cyclone cover	1.00	pcs
850	046166	Cyclone cover, fully sealed, new ET for BioWIN 10-26 from batch 30	1.00	pcs
860	019836	Cylinder screw 2.9x16 (not illustrated)	1.00	pcs
870	018139	Cylinder screw 4.2x13 DIN7981SP (not illustrated)	1.00	pcs
880	016768	Cylinder screw M3x5	1.00	pcs
950	004237	Cylinder screw M5x10 ISO 4762 (not illustrated)	1.00	pcs
80	050868	de: +Deckel Vorratsbehälter BW2	1.00	pcs
8	054363	de: Abdeckblende Pelletsbehälter Klassik BW2T	1.00	pcs
5	054361	de: Abdeckblende Pelletsbehälter Premium BW2T	1.00	pcs
820	054408	de: BIO92T Pelletsbehälter BW2 T Premium/Exklusiv (für Sauglängen bis 25m)	1.00	pcs
900	054350	de: Blende PB Basaltgrau BW2T	1.00	pcs
70	054346	de: Deckel Pelletsbehälter BW2T	1.00	pcs
1070	054365	de: Deckel Pelletsbehälter BW2T	1.00	pcs
75	054348	de: Deckel Pelletsbehälter Klassik BW2T	1.00	pcs
140	053887	de: Flachkopfschraube 5x10	1.00	pcs
160	054349	de: Fülldeckel Basaltgrau BW2T	1.00	pcs
285	054653	de: Kohlebürstenset (2Stk.) zu Motor-Saugturbine 230V ebetec für Pellets-Zuführung 15m BW2T	1.00	pcs
300	048970	de: Konsole Näherungsschalter BW2T	1.00	pcs

Pellet hopper (A000130)

Item no.	Article no.	Description	Quantity	Unit
315	054424	de: L-Wi. Abdeckblende BW2T	1.00	pcs
350	006242	de: Motor -Saugturbine 15m, 230V, 1450W BW2T	1.00	pcs
360	007635	de: Näherungsschalter kapazitiv EC 3025 NPAPL mit Anschlußkabel 0,3m	1.00	pcs
520	048971	de: Schutzblech für Pelletsschnecke BW2, BW2T	1.00	pcs
1020	054352	de: Seitenwand links Pelletsbehälter BW2T	1.00	pcs
1030	051752	de: Türlager oben Pelletsbehälter BW2T	1.00	pcs
890	054439	de: Verkleidungstür PB BW2T	1.00	pcs
1080	054449	de: Zwischenplatte Gebläse montiert BW2, BW2T	1.00	pcs
430	018309	Disc 5 DIN134	1.00	pcs
440	031753	Disc 6 ISO 7093	1.00	pcs
120	031256	Distance bolt	1.00	pcs
960	051753	Door mounting, bottom	1.00	pcs
60	048974	Fastening bracket	1.00	pcs
10	042452	Feed axle	1.00	pcs
150	051114	Flange, auger motor	1.00	pcs
250	031257	Flap seal	1.00	pcs
1040	012600	Gas spring 4534DS 0100 N	1.00	pcs
770	003208	Grommet 10x17.5x1.2	1.00	pcs
390	012499	Grooved ball bearing	1.00	pcs
190	053540	Half-collar auger tube	1.00	pcs
570	016586	Hexagon nut M5 DIN 934	1.00	pcs
560	016565	Hexagon nut M5 with flange and gearing (not illustrated)	1.00	pcs

Pellet hopper (A000130)

Item no.	Article no.	Description	Quantity	Unit
580	016594	Hexagon nut M6 DIN 934	1.00	pcs
590	016553	Hexagon nut M8 with flange and gearing	1.00	pcs
550	016567	Hexagon nut M10 with flange and gearing (not illustrated)	1.00	pcs
600	031545	Hexagon screw M5x12 DIN 7500 (not ilustrated)	1.00	pcs
610	017051	Hexagon screw M6x12 DIN 933 (not illustrated)	1.00	pcs
620	021504	Hexagon screw M6x45 DIN933	1.00	pcs
630	015134	Hexagon screw M8x16 DIN 933	1.00	pcs
640	017086	Hexagon screw M8x20 DIN 933 (not illustrated)	1.00	pcs
410	050990	Hinge M345	1.00	pcs
450	008915	Hose 7x2	1.00	m
470	006875	Hose clip 40-60	1.00	pcs
460	006874	Hose clip ABA 11	1.00	pcs
1060	051751	L-bracket	1.00	pcs
970	009990	Leg M10 x 40	1.00	pcs
690	016171	Locking ring Ø20x1.2	1.00	pcs
680	016727	Lock nut M5	1.00	pcs
700	006897	Lock washer Ø 6	1.00	pcs
930	001760	Magnetic lock, black - VW, LWP18-50, LWK	1.00	pcs
980	051773	Magnetic sheet	1.00	pcs
920	051754	Maintenance cover BioWIN2	1.00	pcs
20	006340	Mount connections PG9	1.00	pcs
375	005026	OKE9281 Cable protection plate	1.00	pcs

Pellet hopper (A000130)

Item no.	Article no.	Description	Quantity	Unit
510	045951	Partition plate	1.00	pcs
510	052480	Partition plate	1.00	pcs
1010	051614	Pedestal	1.00	pcs
800	048986	Pellet container cladding	1.00	pcs
290	042035	Piston	1.00	pcs
540	051397	Protection cover GPN 690	1.00	pcs
515	051790	Protection plate for cable BW2	1.00	pcs
305	051786	Proximity switch bracket lid	1.00	pcs
370	006832	Proximity switch M12, inductive	1.00	pcs
240	045955	Receptacle flap	1.00	pcs
105	053465	Reserve supply container seal	1.00	pcs
200	048976	Retaining bracket, pellet tank	1.00	pcs
180	009559	Rubber grommet DK 6-9-12-7	1.00	pcs
100	031254	Seal frame	1.00	pcs
107	053467	Seal profile reserve supply container 200 kg	1.00	pcs
110	042232	Seal section	1.00	pcs
840	048903	Shaft seal ring DIN 3760AS AD52 ID20	1.00	pcs
710	045949	Sieve with eye	1.00	pcs
940	000299	Silicone buffer	1.00	pcs
1050	044802	Southco hinge	1.00	pcs
740	009546	Spring lock	1.00	pcs
750	050869	Spur gear M2 Z36	1.00	pcs

Pellet hopper (A000130)

Item no.	Article no.	Description	Quantity	Unit
760	045771	Spur gear M2 Z45	1.00	pcs
985	052482	Suction pipe	1.00	pcs
50	006851	Support plate, motor	1.00	pcs
260	000965	Terminal, 3-pin	1.00	pcs
420	018058	U-washer	1.00	pcs
780	013749	Union nut 3/8"	1.00	pcs
790	006351	Union nut ML8 GV	1.00	pcs
30	006877	Water connection	1.00	pcs
830	050379	Water tank	1.00	pcs
40	051107	Water tank support	1.00	pcs
1000	051771	Water tank support	1.00	pcs

Ash conveyor (A000132)

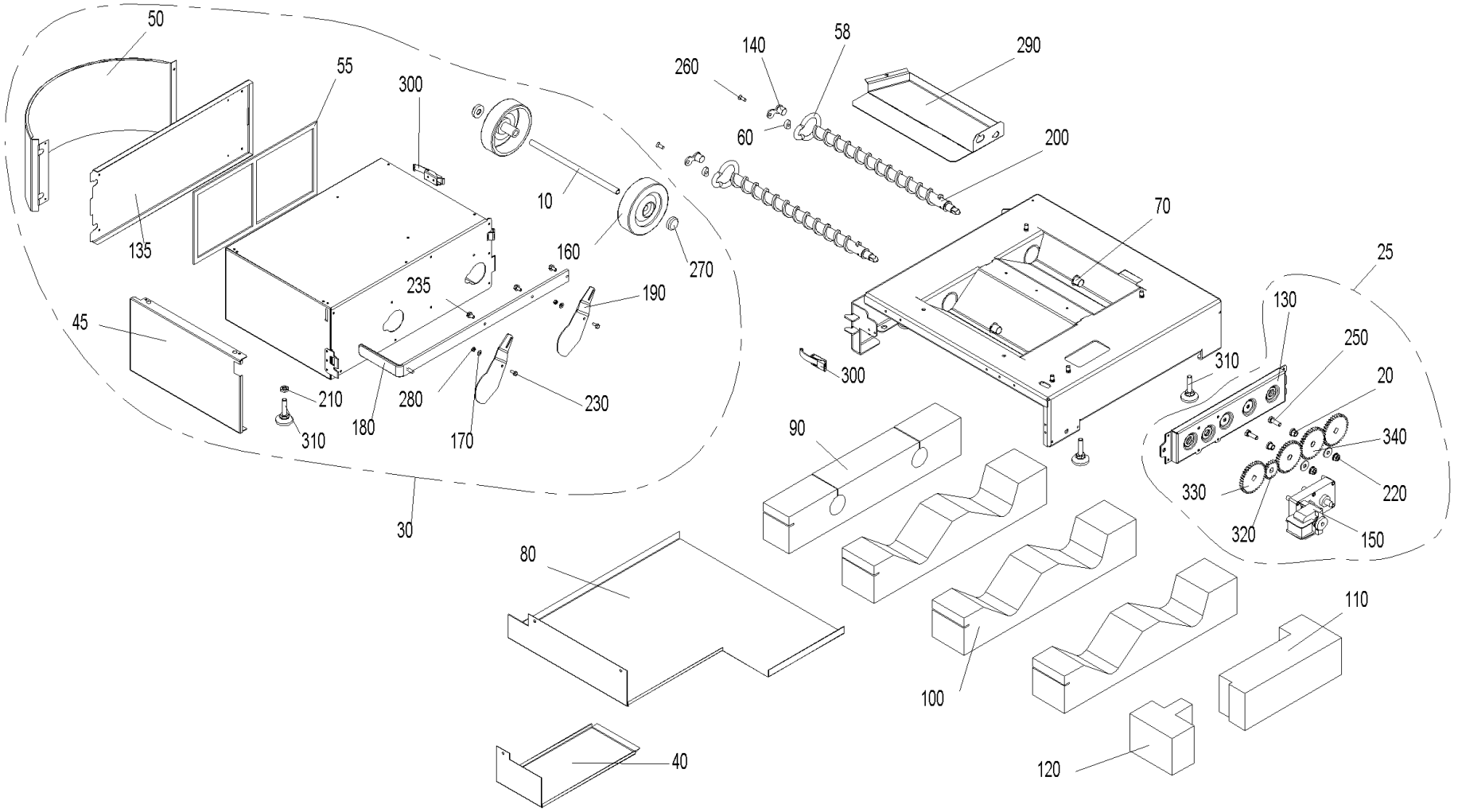

Ash conveyor (A000132)

Item no.	Article no.	Description	Quantity	Unit
10	051379	Ash box axle	1.00	pcs
290	050692	Ash box base	1.00	pcs
135	051635	Ash box flap	1.00	pcs
100	051127	Ash chamfer insulation	1.00	pcs
20	006745	Ash conveyor bearing bush	1.00	pcs
130	048572	Ash conveyor bracket	1.00	pcs
90	051126	Ash pipe insulation	1.00	pcs
25	054418	Ash removal, completely pre- mounted, BioWIN2	1.00	pcs
200	051542	Auger	1.00	pcs
140	051120	Auger bearing	1.00	pcs
30	054414	BIO90T Ash box, cpl for BWE102-262 T	1.00	pcs
55	046665	Container seal	1.00	pcs
260	016863	Countersinking screw M6x16	1.00	pcs
40	051125	Cover for ash conveyor motor	1.00	pcs
80	051124	Cup insulation	1.00	pcs
45	054342	de: Blende Aschebox BW2T	1.00	pcs
50	054343	de: Blende Aschebox rund BW2T	1.00	pcs
58	054679	de: Dichtung Flansch BW2	1.00	pcs
180	054444	de: Schieberblech BW2T	1.00	pcs
170	018309	Disc 5 DIN134	1.00	pcs
60	048573	Distance	1.00	pcs
70	012508	Friction bearing with connector	1.00	pcs

Ash conveyor (A000132)

Item no.	Article no.	Description	Quantity	Unit
220	016553	Hexagon nut M8 with flange and gearing	1.00	pcs
210	031156	Hexagon nut M10 DIN 439	1.00	pcs
230	031545	Hexagon screw M5x12 DIN 7500 (not ilustrated)	1.00	pcs
235	031549	Hexagon screw M6x12 DIN 7500	1.00	pcs
240	017086	Hexagon screw M8x20 DIN 933 (not illustrated)	1.00	pcs
250	017191	Hexagon screw M8x25 DIN 933	1.00	pcs
310	009990	Leg M10 x 40	1.00	pcs
280	016727	Lock nut M5	1.00	pcs
150	044665	Motor	1.00	pcs
120	051129	Motor insulation, front	1.00	pcs
110	051128	Motor insulation, rear	1.00	pcs
190	050686	Sliding plate	1.00	pcs
300	009546	Spring lock	1.00	pcs
320	047543	Spur gear M2 Z20	1.00	pcs
330	050869	Spur gear M2 Z36	1.00	pcs
340	048566	Spur gear M2 Z36 Ø12	1.00	pcs
270	006889	Washer Ø12	1.00	pcs
160	006888	Wheel AG 125-12	1.00	pcs

Boiler (BW2-K+BW2-K)

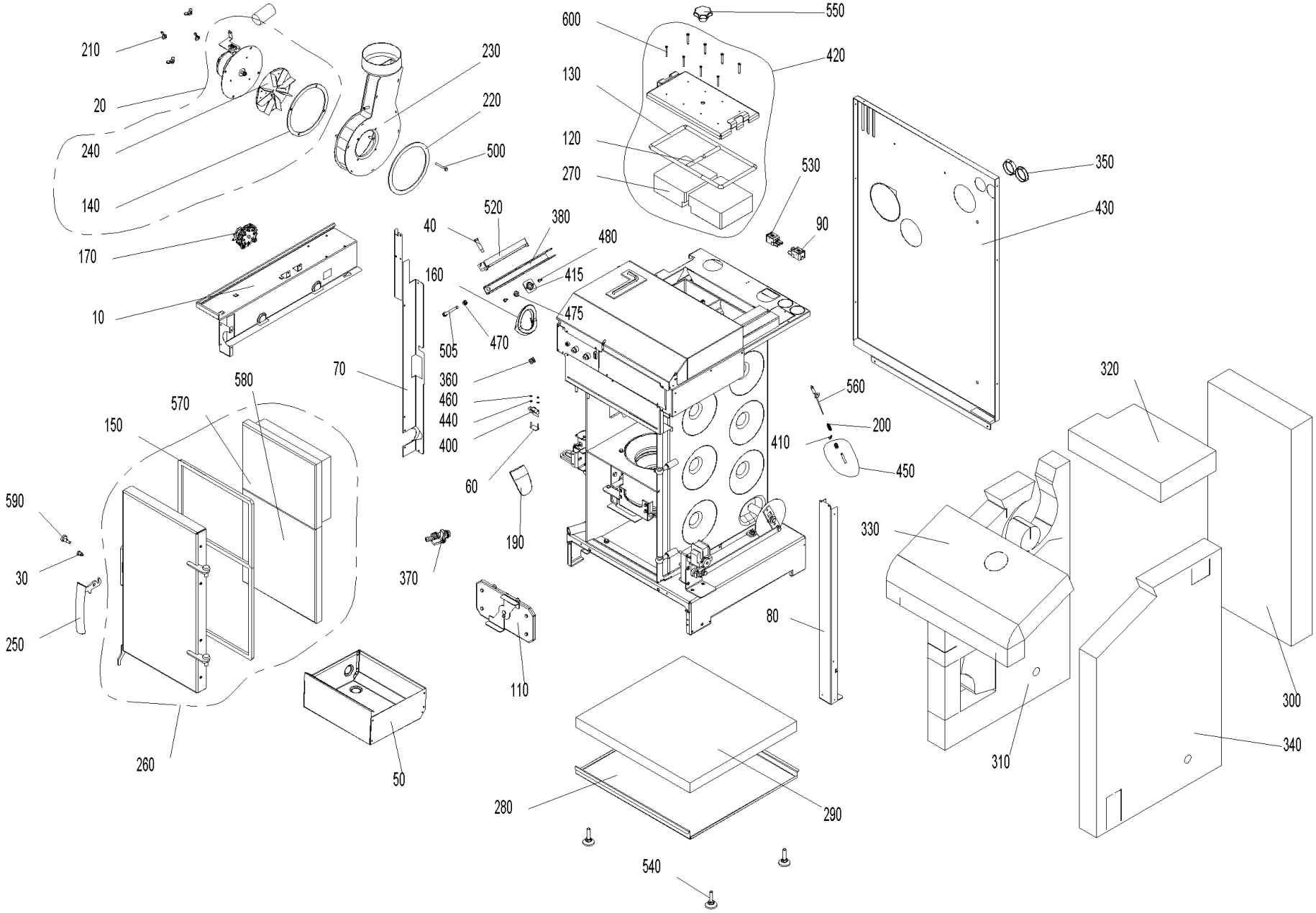

Boiler (BW2-K+BW2-K)

Item no.	Article no.	Description	Quantity	Unit
50	048928	Ash pan	1.00	pcs
160	048926	Auger tube seal	1.00	pcs
30	048881	Axle for door handle CK45	1.00	pcs
230	053234	Blower box for BioWIN102-262	1.00	pcs
140	051006	Blower box seal	1.00	pcs
220	051005	Blower seal	1.00	pcs
240	052951	Blower wheel Ø160 x 25 for BioWIN2 102 - 262	1.00	pcs
250	007480	Boiler handle	1.00	pcs
580	050447	Bottom door stone	1.00	pcs
350	004096	Cable feed-through 2400 black Ø50	2.00	pcs
360	051112	Cage nut M8	1.00	pcs
520	048975	Clamping rail	1.00	pcs
420	050477	Cleaning cover, complete	1.00	pcs
420	048870	Cleaning cover, complete	1.00	pcs
110	051056	Coasting surface cover, complete	1.00	pcs
320	048910	Coasting surface insulation	1.00	pcs
40	013813	Collar screw	1.00	pcs
200	050647	Combustion chamber sensor spring	1.00	pcs
70	051109	Cover, left	1.00	pcs
80	048609	Cover, right	1.00	pcs
10	050918	Cover plate	1.00	pcs
280	048863	Cup insulation 10-26 K BW2	1.00	pcs

Boiler (BW2-K+BW2-K)

Item no.	Article no.	Description	Quantity	Unit
600	016719	Cylinder drilling screw 4.2 x 38 DIN7504	8.00	pcs
10	048991	de: Abdeckblech BW2 21/26 BW2T	1.00	pcs
20	054674	de: Abgasgebläse inkl. Dichtung BW2-33KW, BW2-XL	1.00	pcs
140	054673	de: Dichtung Gebläsekasten BW2 33	1.00	pcs
230	054672	de: Gebläsekasten inkl. Dichtung BW2 33KW	1.00	pcs
240	054460	de: Gebläserad Ø210 33-62kW BW2T	1.00	pcs
320	048958	de: Glasfilz 22kg/m³ mit Glasseide	1.00	pcs
310	054455	de: Isolierung links BW2 33kW	1.00	pcs
310	051117	de: Isolierung links mit fadenverstärktem Vlies (natur) Glasfaser 22kg/m³	1.00	pcs
340	048907	de: Isolierung re Glasfilz 22kg/m³ mit Vlies einseitig	1.00	pcs
430	054851	de: Rückwand Kessel ET BioWIN2 und BioWIN2T 10/15 kW	1.00	pcs
430	054853	de: Rückwand Kessel ET BioWIN2 und BioWIN2T 21/26 kW	1.00	pcs
170	045404	Differential pressure watchdog	1.00	pcs
440	021474	Disc 3 DIN134	2.00	pcs
570	048914	Door stone	1.00	pcs
190	048921	Down chute	1.00	pcs
410	031274	Eyelet M6	1.00	pcs
60	051045	Fastened microswitch, complete	1.00	pcs
290	048864	Floor insulation	2.00	pcs
20	053010	Flue gas blower	1.00	pcs
260	051545	Heating door cpl. mounted	1.00	pcs
150	048916	Heating door seal	1.00	pcs

Boiler (BW2-K+BW2-K)

Item no.	Article no.	Description	Quantity	Unit
460	016551	Hexagon nut M3 DIN 934	2.00	pcs
475	016553	Hexagon nut M8 with flange and gearing	1.00	pcs
480	031545	Hexagon screw M5x12 DIN 7500 (not ilustrated)	1.00	pcs
500	021504	Hexagon screw M6x45 DIN933	4.00	pcs
505	016461	Hexagon screw M8x80 DIN 933	1.00	pcs
270	050636	Insulating stone for cleaning cover	2.00	pcs
270	051007	Insulating stone for cleaning cover	2.00	pcs
370	004385	KFE cock	1.00	pcs
310	051119	Left insulation	1.00	pcs
540	009990	Leg M10 x 40	4.00	pcs
590	051004	Locking pin	1.00	pcs
400	007632	Microswitch with lever	1.00	pcs
470	015992	Nut M8 DIN 934 V2 - LogWIN Klassik pellet ready	1.00	pcs
380	048611	Pellet container clamp	1.00	pcs
415	052484	Platelet flanged nut	1.00	pcs
530	070323	Plug, 3-pin, black	1.00	pcs
450	051069	Protective tube for combustion chamber sensor, complete	1.00	pcs
300	051116	Rear insulation	1.00	pcs
340	050924	Right insulation	1.00	pcs
120	051041	Sealing cord, short	2.00	pcs
120	051040	Sealing cord, short	2.00	pcs
130	051034	Sealing cord for cleaning cover	1.00	pcs

Boiler (BW2-K+BW2-K)

Item no.	Article no.	Description	Quantity	Unit
130	051017	Sealing cord for cleaning cover	1.00	pcs
90	070324	Socket, 3-pin, black	1.00	pcs
550	005125	Star handle M12 x 35	1.00	pcs
560	007626	Thermocouple	1.00	pcs
330	048911	Top insulation	1.00	pcs
210	019410	Wing nut M6	4.00	pcs

Burner pot 21-33 (A000027)

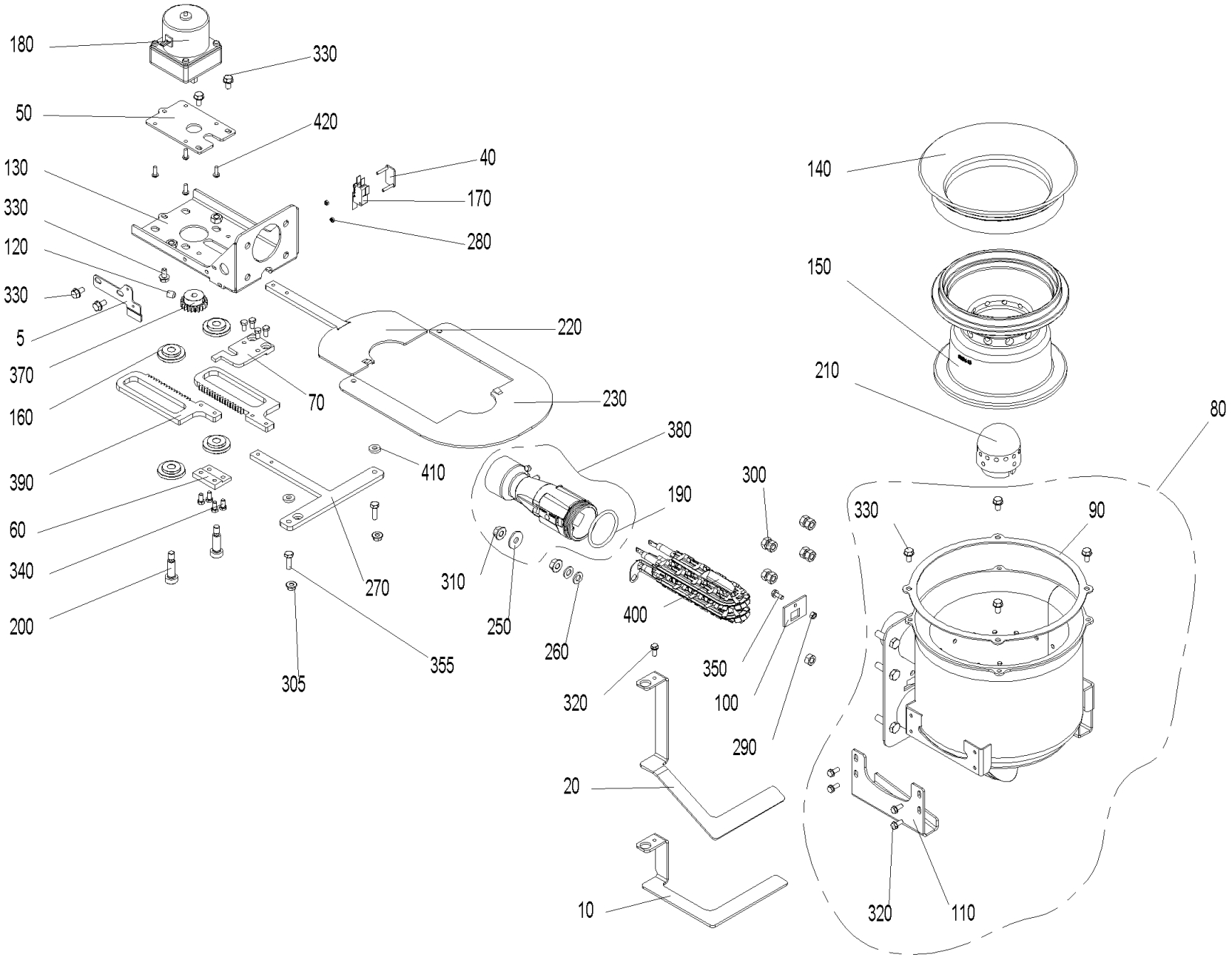

Burner pot 21-33 (A000027)

Item no.	Article no.	Description	Quantity	Unit
20	051046	Ash stop plate, Exclusive	1.00	pcs
10	051048	Ash stop plate, Klassik, Premium	1.00	pcs
160	007125	Bearing for vibrating drive	4.00	pcs
50	050632	Bracket mounting plate	1.00	pcs
80	051065	Burner	1.00	pcs
90	048861	Burner seal	1.00	pcs
125	053643	Cable - ignition element for BW1, BW2, FireWIN and VarioWIN	1.00	pcs
150	048941	Cone, bottom part for BioWIN2 21/26	1.00	pcs
140	050642	Cone, top part 45°	1.00	pcs
420	016780	Cylinder screw M4x12 DIN 7985	4.00	pcs
350	015025	de: Sechskantschraube DIN 933 - M5x16 - 8.8 - verzinkt	1.00	pcs
240	021474	Disc 3 DIN134	2.00	pcs
260	024779	Disc 8 ISO 7089	2.00	pcs
250	031755	Disc 8 ISO 7093	1.00	pcs
100	048841	Driving rod feed-through	1.00	pcs
40	051045	Fastened microswitch, complete	1.00	pcs
220	051051	Grate plate, left	1.00	pcs
230	053539	Grate plate, right	1.00	pcs
110	048842	Grate plate guide	1.00	pcs
270	051023	Grate plate scraper	1.00	pcs
280	016551	Hexagon nut M3 DIN 934	2.00	pcs
290	017035	Hexagon nut M5 DIN 934	1.00	pcs

Burner pot 21-33 (A000027)

Item no.	Article no.	Description	Quantity	Unit
300	031153	Hexagon nut M8 DIN 934	9.00	pcs
310	016553	Hexagon nut M8 with flange and gearing	2.00	pcs
305	016566	Hexagon nut with flange and gearing M6	2.00	pcs
340	016756	Hexagon screw M5x10 DIN 933	4.00	pcs
320	031545	Hexagon screw M5x12 DIN 7500 (not ilustrated)	5.00	pcs
330	031549	Hexagon screw M6x12 DIN 7500	7.00	pcs
355	015471	Hexagon screw M6x20 DIN 933	2.00	pcs
400	055201	Ignition element BioWIN10-26, FireWIN from lot 15, VarioWIN from lot 15 BioWIN XL, LWK	1.00	pcs
402	053851	Ignition element with cable	1.00	pcs
410	051054	Intermediate plate	2.00	pcs
170	007632	Microswitch with lever	1.00	pcs
60	050649	Mounting plate	1.00	pcs
70	051042	Mounting plate, top	1.00	pcs
190	006849	O-ring FPM70 45 x 4	1.00	pcs
210	047774	Primary air pin for BioWIN10-26 FireWIN bis Los9 und PMX 21-26	1.00	pcs
120	033112	Setscrew M8x10 DIN916	1.00	pcs
130	050639	Shake-out bracket	1.00	pcs
180	012561	Shake-out motor	1.00	pcs
200	017048	Shoulder screw M8 10x25 ISO 7379	2.00	pcs
370	007222	Spur gear M1,5; Z21	1.00	pcs
390	048161	Steering rack BioWin2 10-26	2.00	pcs
5	053544	Stop plate	1.00	pcs

Burner pot 21-33 (A000027)

Item no.	Article no.	Description	Quantity	Unit
380	051067	Venturi nozzle	1.00	pcs

Cladding (A000133)

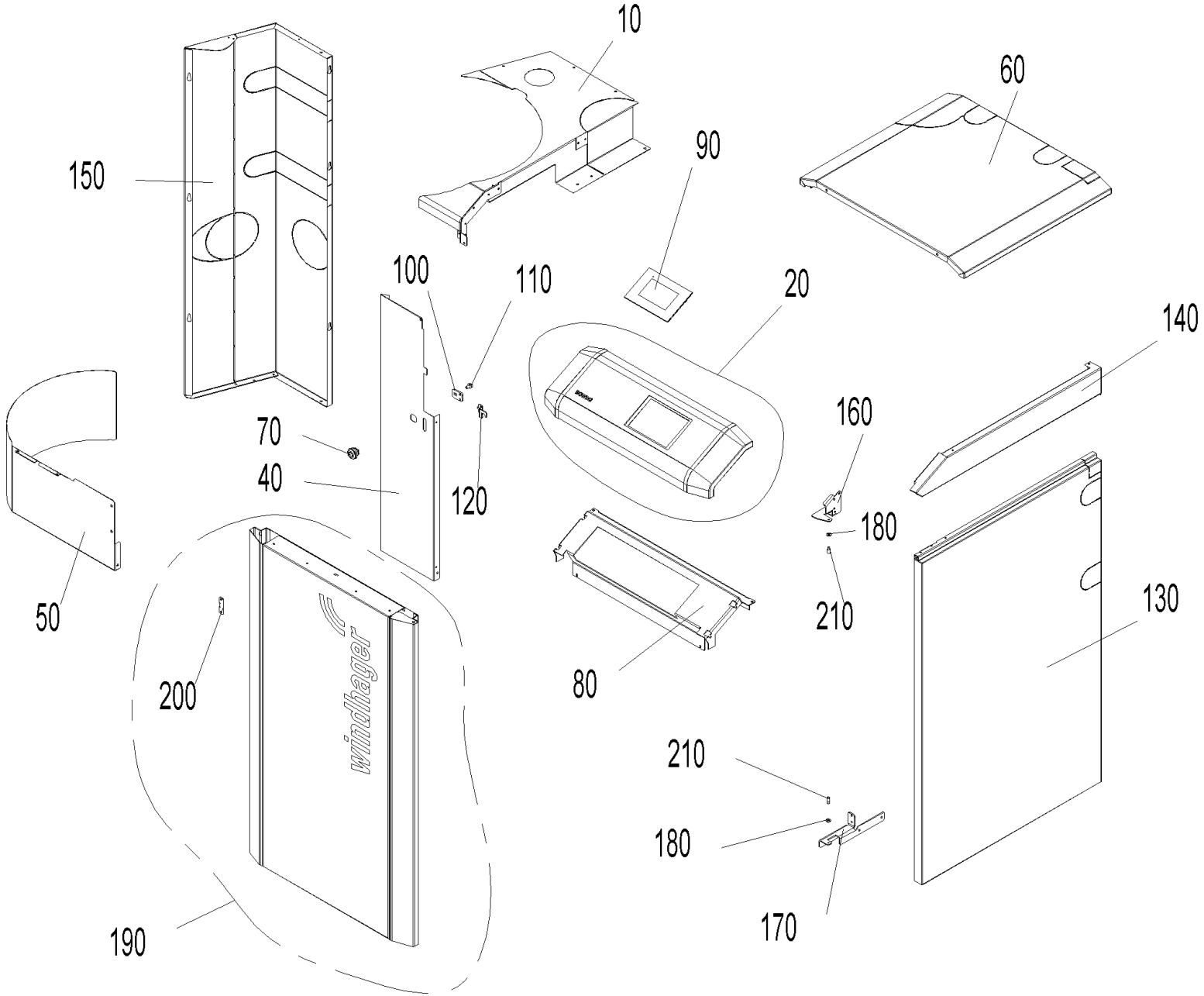

Cladding (A000133)

Item no.	Article no.	Description	Quantity	Unit
120	047893	Clamping plate	1.00	pcs
220	018139	Cylinder screw 4.2x13 DIN7981SP (not illustrated)	1.00	pcs
10	054443	de: Abdeckung hinten links BW2T 10/15	1.00	pcs
10	054442	de: Abdeckung hinten links kpl. BW2T 21/26	1.00	pcs
20	054440	de: Bedienfeld kpl. BW2T	1.00	pcs
40	054356	de: Blende links BW2T	1.00	pcs
50	054344	de: Blende Pelletsbehälter BW2T	1.00	pcs
60	054121	de: Deckel beschichtet RAL 7012, BW2T 10/15	1.00	pcs
60	054132	de: Deckel beschichtet RAL 7012, BW2T 21/26	1.00	pcs
80	054072	de: Haltekonsole BW2T	1.00	pcs
150	054353	de: Seitenwand links BW2T 10/15	1.00	pcs
150	054355	de: Seitenwand links BW2T 21/26	1.00	pcs
130	054359	de: Seitenwand rechts BW2T 10/15	1.00	pcs
130	054360	de: Seitenwand rechts BW2T 21/26	1.00	pcs
140	054075	de: Seitenwand rechts oben BW2T 10/15	1.00	pcs
140	054325	de: Seitenwand rechts oben BW2T 21/26	1.00	pcs
160	054077	de: Türlager oben BW2T	1.00	pcs
170	054076	de: Türlager unten BW2T	1.00	pcs
190	054441	de: Verkleidungstür kpl. BW2T	1.00	pcs
180	018309	Disc 5 DIN134	1.00	pcs
210	015507	Dog point screw	1.00	pcs
100	047891	Driver	1.00	pcs

Cladding (A000133)

Item no.	Article no.	Description	Quantity	Unit
110	031549	Hexagon screw M6x12 DIN 7500	1.00	pcs
90	001009	INF8 MES INFINITY InfoWIN Touch	1.00	pcs
200	047892	Locking plate	1.00	pcs
70	012256	Turning bolt	1.00	pcs

Control panel (A000131)

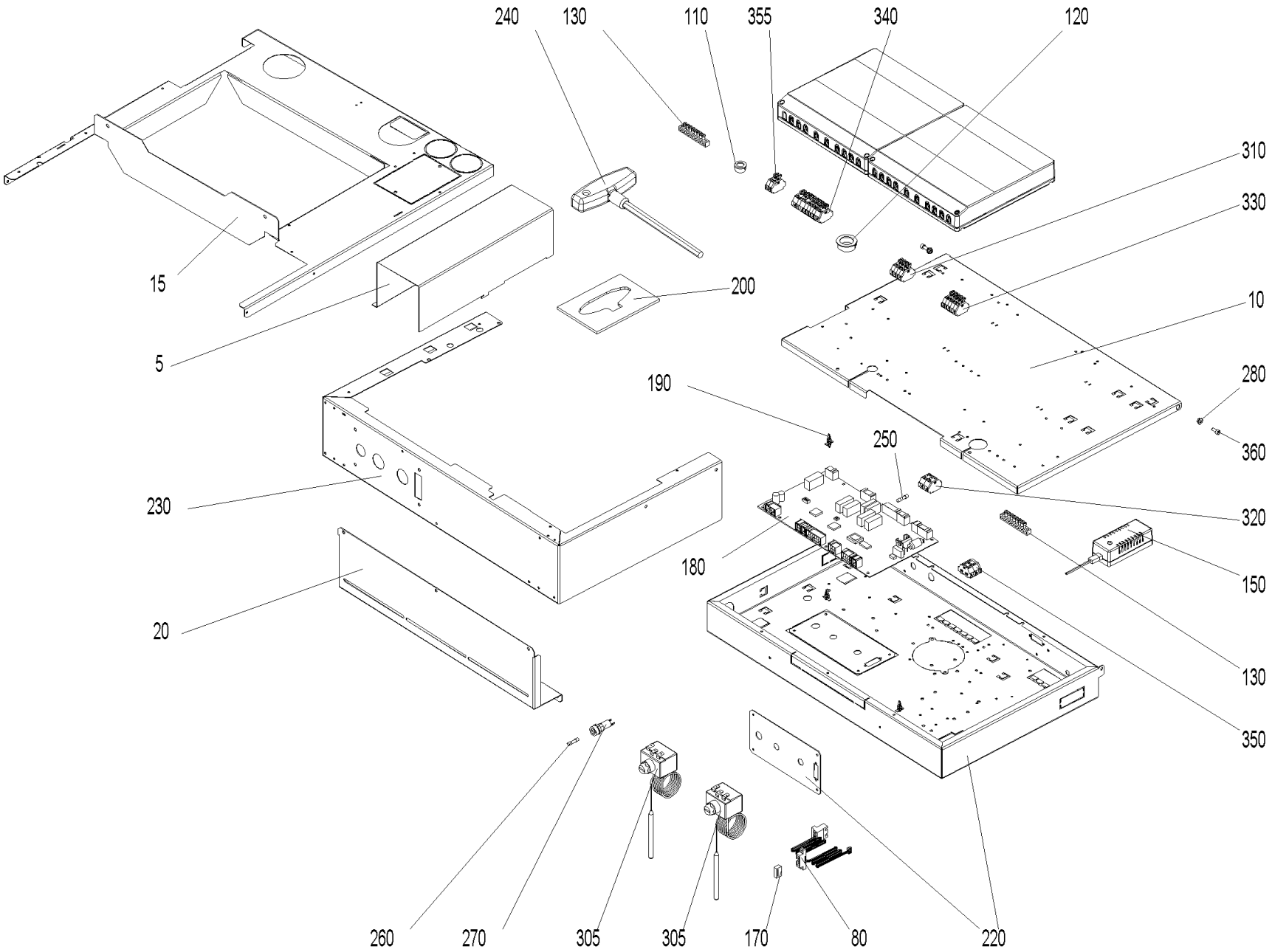

Control panel (A000131)

Item no.	Article no.	Description	Quantity	Unit
260	003228	6.3A fuse (not illustrated)	1.00	pcs
110	009542	Cable feed-through	1.00	pcs
370	018140	Cylinder screw 4.2x13 DIN7981ST (not illustrated)	1.00	pcs
5	054093	de: Abdeckung Kabelkanal BW2 10/15, BW2T 10/15	1.00	pcs
5	054334	de: Abdeckung Kabelkanal BW2 21/26, BW2T 21/26	1.00	pcs
10	053779	de: Deckel Schaltfeld BW2T, LWPT	1.00	pcs
15	054090	de: Haltekonsole Schaltfeld 10/15 BW2T	1.00	pcs
15	054097	de: Haltekonsole Schaltfeld 21/26 BW2	1.00	pcs
80	009605	de: Kabel - LON LWPT, BWXL2, BW2, BW2T	1.00	pcs
90	050976	de: Kabelbaum 12V BW2, BW2T	1.00	pcs
30	054294	de: Kabelbaum 230V BW2T	1.00	pcs
100	054296	de: Kabelbaum AAT+HFR BW2T	1.00	pcs
120	009536	de: Kabeldurchführung 2160 schwarz Ø 28	1.00	pcs
40	054292	de: Kabel Netz BW2T	1.00	pcs
50	054291	de: Kabel Saugturbine BW2T	1.00	pcs
60	054293	de: Kabel Saugzuggebläse BW2T	1.00	pcs
70	054290	de: Kabel STB BW2T	1.00	pcs
180	012016	de: Platine Feuerungsautomat FMP BW2T 33KW	1.00	pcs
200	054438	de: Position Sechskantsch. BW2T	1.00	pcs
230	054089	de: Schaltfeld Boden BW2T	1.00	pcs
220	052994	de: Schaltfeld Unterteil BW2T, LWPT	1.00	pcs
280	016564	de: Sperrzahnmutter M4 verzinkt	1.00	pcs

Control panel (A000131)

Item no.	Article no.	Description	Quantity	Unit
300	007624	de: Thermoelement 2AB NM30/110 mm TI/DI 2AB25 2,5 (Brennkammer- bzw. Thermocontrollfühler) Länge - Anschlußkabel 900mm	1.00	pcs
310	006835	de: Wagoblock 261 5tlg."ext. Wärme" 1-4 PMX, BW2T, LWPT	1.00	pcs
360	016782	de: Zylinderschraube m. Innensechskant ISO 4762 - M 4 x 10 - 8.8 - verzinkt (DIN 912)	1.00	pcs
250	006900	Fuse 1 A T 5x20 ceramic tube	1.00	pcs
270	003663	Fuse holder	1.00	pcs
240	027392	Hexagon pin key with T-handle 10x200 for VarioWIN, BioWIN XL 35-60	1.00	pcs
210	007629	Immersion sensor PT 1000 (not illustrated)	1.00	pcs
290	502186	MES009M Immersion sensor	1.00	pcs
140	018190	Oval-head screw 3.2x16 (not illustrated)	1.00	pcs
180	011990	PCB, FMP BW2	1.00	pcs
190	007609	PCB holder	1.00	pcs
170	005784	Pin connector (not illustrated)	1.00	pcs
150	051645	Power supply unit 12V	1.00	pcs
20	048902	Retaining plate	1.00	pcs
130	009929	Terminal bar MS 8-pin 8x8mm for VarioWIN,FireWIN, BioWIN XL 35-60	1.00	pcs
305	005672	Thermostat LS1+100-6U	1.00	pcs
330	006719	Wago terminal block 261 6-pce. heating requirement/probe switching for BioWIN 10-26, BioWIN XL 35-60 (*not illustrated)	1.00	pcs
355	009948	Wago terminal block 261; 2-pin WMS 1-2, 3-piece for VarioWIN, FireWIN	1.00	pcs
350	006833	Wago terminal block 261; 4-pin "12V GND"	1.00	pcs
320	006834	Wago terminal block 261; 4-pin "safety 1-4"	1.00	pcs
340	009891	Wago terminal block 261; 11-pin safety 1-11 for FireWIN, VarioWIN	1.00	pcs

Heating surface cleaning (BW2-HFR+BW2-HFR)

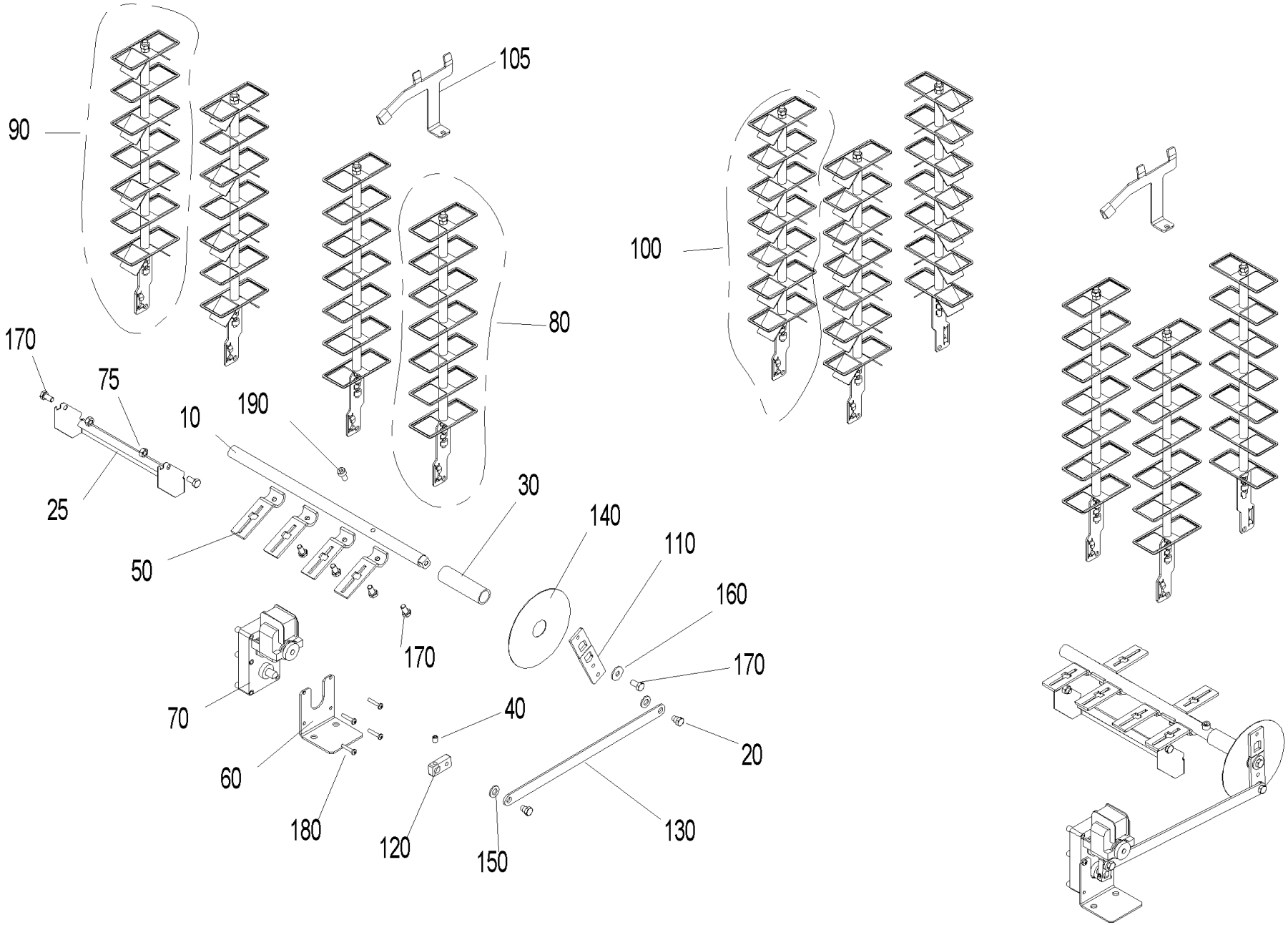

Heating surface cleaning (BW2-HFR+BW2-HFR)

Item no.	Article no.	Description	Quantity	Unit
25	051624	Ash sheet	1.00	pcs
10	048882	Axle heating surface BW2 10-26	1.00	pcs
105	051076	Cleaning plate for combustion chamber	1.00	pcs
80	051609	Clearer flat	1.00	pcs
100	051611	Clearer flat with turbulator	1.00	pcs
90	051610	Clearer flat with turbulator	1.00	pcs
20	012502	Collar screw	1.00	pcs
180	016837	Cylinder screw M5x25 ISO 7045	1.00	pcs
190	016773	Cylinder screw M8x16 ISO 4762	1.00	pcs
140	051122	Disc	1.00	pcs
160	031755	Disc 8 ISO 7093	1.00	pcs
150	024780	Disc 10 ISO7089	1.00	pcs
30	048980	Distance rod	1.00	pcs
170	016721	Hexagon screw M8x16 DIN 933	1.00	pcs
60	051121	L-bracket, motor HFR	1.00	pcs
50	051547	Lever for cleaning heating surfaces	1.00	pcs
70	044665	Motor	1.00	pcs
75	015992	Nut M8 DIN 934 V2 - LogWIN Klassik pellet ready	1.00	pcs
40	033112	Setscrew M8x10 DIN916	1.00	pcs
110	048884	Shaker lever 1	1.00	pcs
120	048885	Shaker lever 2	1.00	pcs
130	051367	Shaker lever 3	1.00	pcs

Pellet hopper (A000130)

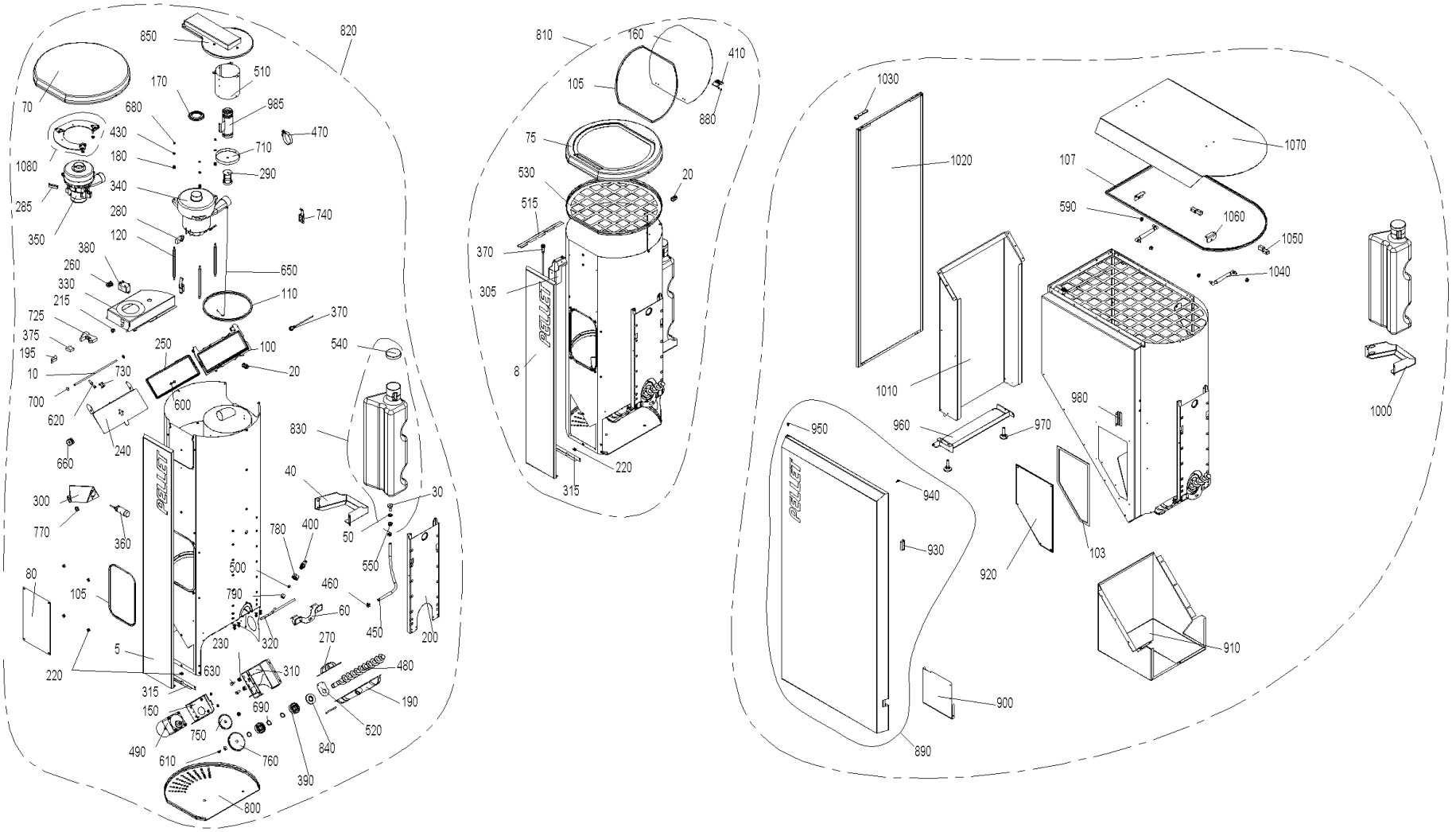

Pellet hopper (A000130)

Item no.	Article no.	Description	Quantity	Unit
330	050866	Air duct	1.00	pcs
480	051544	Auger	1.00	pcs
310	048891	Auger motor bracket	1.00	pcs
490	050901	Auger motor SPG	1.00	pcs
320	050867	Back-burn safeguard lead	1.00	pcs
725	005043	Base for relay	1.00	pcs
810	054409	BIO91T Reserve supply container for BW2 T Klassik	1.00	pcs
340	044667	Blower motor 122151-12 for feed Conversion instructions for use with PMX 15-26 are enclosed! for BioWIN 10-26, PMX,BioWIN XL 35-6	1.00	pcs
170	031253	Blower seal	1.00	pcs
195	005077	Bracket	1.00	pcs
400	042510	Burn-back protection completely assembled for PMX, BioWIN 10-26	1.00	pcs
380	005067	BW2 Relay 30A 250V	1.00	pcs
650	031258	Cable	1.00	pcs
215	009542	Cable feed-through	1.00	pcs
210	045048	Cable feed with relay	1.00	pcs
660	031261	Cable pulley	1.00	pcs
220	051388	Cage nut M5	1.00	pcs
230	051112	Cage nut M8	1.00	pcs
280	006859	Carbon brushes for blower motor	1.00	pcs
130	051386	Cheese head screw M5x10 Taptite	1.00	pcs
270	048967	Clamp collar	1.00	pcs
730	045952	Clamping piece for cable	1.00	pcs

Pellet hopper (A000130)

Item no.	Article no.	Description	Quantity	Unit
103	046665	Container seal	1.00	pcs
670	031096	Countersinking screw M4x20 DIN965 gv KS (not illustrated)	1.00	pcs
910	051755	CoverPB BioWIN2	1.00	pcs
500	006378	Cutting ring DL8 07-151	1.00	pcs
850	053466	Cyclone cover	1.00	pcs
850	046166	Cyclone cover, fully sealed, new ET for BioWIN 10-26 from batch 30	1.00	pcs
860	019836	Cylinder screw 2.9x16 (not illustrated)	1.00	pcs
870	018139	Cylinder screw 4.2x13 DIN7981SP (not illustrated)	1.00	pcs
880	016768	Cylinder screw M3x5	1.00	pcs
950	004237	Cylinder screw M5x10 ISO 4762 (not illustrated)	1.00	pcs
80	050868	de: +Deckel Vorratsbehälter BW2	1.00	pcs
8	054363	de: Abdeckblende Pelletsbehälter Klassik BW2T	1.00	pcs
5	054361	de: Abdeckblende Pelletsbehälter Premium BW2T	1.00	pcs
820	054408	de: BIO92T Pelletsbehälter BW2 T Premium/Exklusiv (für Sauglängen bis 25m)	1.00	pcs
900	054350	de: Blende PB Basaltgrau BW2T	1.00	pcs
70	054346	de: Deckel Pelletsbehälter BW2T	1.00	pcs
1070	054365	de: Deckel Pelletsbehälter BW2T	1.00	pcs
75	054348	de: Deckel Pelletsbehälter Klassik BW2T	1.00	pcs
140	053887	de: Flachkopfschraube 5x10	1.00	pcs
160	054349	de: Fülldeckel Basaltgrau BW2T	1.00	pcs
285	054653	de: Kohlebürstenset (2Stk.) zu Motor-Saugturbine 230V ebetec für Pellets-Zuführung 15m BW2T	1.00	pcs
300	048970	de: Konsole Näherungsschalter BW2T	1.00	pcs

Pellet hopper (A000130)

Item no.	Article no.	Description	Quantity	Unit
315	054424	de: L-Wi. Abdeckblende BW2T	1.00	pcs
350	006242	de: Motor -Saugturbine 15m, 230V, 1450W BW2T	1.00	pcs
360	007635	de: Näherungsschalter kapazitiv EC 3025 NPAPL mit Anschlußkabel 0,3m	1.00	pcs
520	048971	de: Schutzblech für Pelletsschnecke BW2, BW2T	1.00	pcs
1020	054352	de: Seitenwand links Pelletsbehälter BW2T	1.00	pcs
1030	051752	de: Türlager oben Pelletsbehälter BW2T	1.00	pcs
890	054439	de: Verkleidungstür PB BW2T	1.00	pcs
1080	054449	de: Zwischenplatte Gebläse montiert BW2, BW2T	1.00	pcs
430	018309	Disc 5 DIN134	1.00	pcs
440	031753	Disc 6 ISO 7093	1.00	pcs
120	031256	Distance bolt	1.00	pcs
960	051753	Door mounting, bottom	1.00	pcs
60	048974	Fastening bracket	1.00	pcs
10	042452	Feed axle	1.00	pcs
150	051114	Flange, auger motor	1.00	pcs
250	031257	Flap seal	1.00	pcs
1040	012600	Gas spring 4534DS 0100 N	1.00	pcs
770	003208	Grommet 10x17.5x1.2	1.00	pcs
390	012499	Grooved ball bearing	1.00	pcs
190	053540	Half-collar auger tube	1.00	pcs
570	016586	Hexagon nut M5 DIN 934	1.00	pcs
560	016565	Hexagon nut M5 with flange and gearing (not illustrated)	1.00	pcs

Pellet hopper (A000130)

Item no.	Article no.	Description	Quantity	Unit
580	016594	Hexagon nut M6 DIN 934	1.00	pcs
590	016553	Hexagon nut M8 with flange and gearing	1.00	pcs
550	016567	Hexagon nut M10 with flange and gearing (not illustrated)	1.00	pcs
600	031545	Hexagon screw M5x12 DIN 7500 (not ilustrated)	1.00	pcs
610	017051	Hexagon screw M6x12 DIN 933 (not illustrated)	1.00	pcs
620	021504	Hexagon screw M6x45 DIN933	1.00	pcs
630	015134	Hexagon screw M8x16 DIN 933	1.00	pcs
640	017086	Hexagon screw M8x20 DIN 933 (not illustrated)	1.00	pcs
410	050990	Hinge M345	1.00	pcs
450	008915	Hose 7x2	1.00	m
470	006875	Hose clip 40-60	1.00	pcs
460	006874	Hose clip ABA 11	1.00	pcs
1060	051751	L-bracket	1.00	pcs
970	009990	Leg M10 x 40	1.00	pcs
690	016171	Locking ring Ø20x1.2	1.00	pcs
680	016727	Lock nut M5	1.00	pcs
700	006897	Lock washer Ø 6	1.00	pcs
930	001760	Magnetic lock, black - VW, LWP18-50, LWK	1.00	pcs
980	051773	Magnetic sheet	1.00	pcs
920	051754	Maintenance cover BioWIN2	1.00	pcs
20	006340	Mount connections PG9	1.00	pcs
375	005026	OKE9281 Cable protection plate	1.00	pcs

Pellet hopper (A000130)

Item no.	Article no.	Description	Quantity	Unit
510	045951	Partition plate	1.00	pcs
510	052480	Partition plate	1.00	pcs
1010	051614	Pedestal	1.00	pcs
800	048986	Pellet container cladding	1.00	pcs
290	042035	Piston	1.00	pcs
540	051397	Protection cover GPN 690	1.00	pcs
515	051790	Protection plate for cable BW2	1.00	pcs
305	051786	Proximity switch bracket lid	1.00	pcs
370	006832	Proximity switch M12, inductive	1.00	pcs
240	045955	Receptacle flap	1.00	pcs
105	053465	Reserve supply container seal	1.00	pcs
200	048976	Retaining bracket, pellet tank	1.00	pcs
180	009559	Rubber grommet DK 6-9-12-7	1.00	pcs
100	031254	Seal frame	1.00	pcs
107	053467	Seal profile reserve supply container 200 kg	1.00	pcs
110	042232	Seal section	1.00	pcs
840	048903	Shaft seal ring DIN 3760AS AD52 ID20	1.00	pcs
710	045949	Sieve with eye	1.00	pcs
940	000299	Silicone buffer	1.00	pcs
1050	044802	Southco hinge	1.00	pcs
740	009546	Spring lock	1.00	pcs
750	050869	Spur gear M2 Z36	1.00	pcs

Pellet hopper (A000130)

Item no.	Article no.	Description	Quantity	Unit
760	045771	Spur gear M2 Z45	1.00	pcs
985	052482	Suction pipe	1.00	pcs
50	006851	Support plate, motor	1.00	pcs
260	000965	Terminal, 3-pin	1.00	pcs
420	018058	U-washer	1.00	pcs
780	013749	Union nut 3/8"	1.00	pcs
790	006351	Union nut ML8 GV	1.00	pcs
30	006877	Water connection	1.00	pcs
830	050379	Water tank	1.00	pcs
40	051107	Water tank support	1.00	pcs
1000	051771	Water tank support	1.00	pcs

Ash conveyor (A000132)

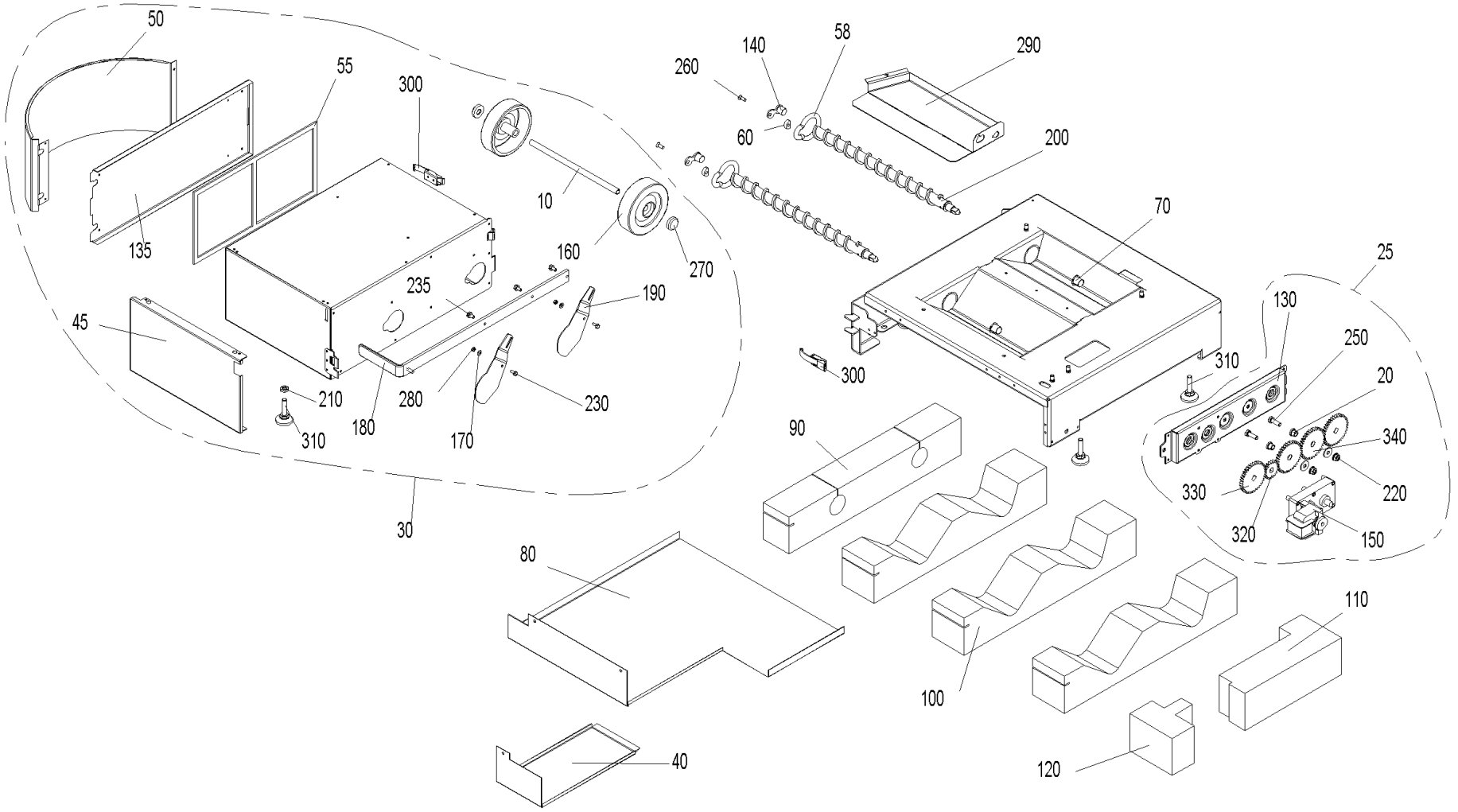

Ash conveyor (A000132)

Item no.	Article no.	Description	Quantity	Unit
10	051379	Ash box axle	1.00	pcs
290	050692	Ash box base	1.00	pcs
135	051635	Ash box flap	1.00	pcs
100	051127	Ash chamfer insulation	1.00	pcs
20	006745	Ash conveyor bearing bush	1.00	pcs
130	048572	Ash conveyor bracket	1.00	pcs
90	051126	Ash pipe insulation	1.00	pcs
25	054418	Ash removal, completely pre- mounted, BioWIN2	1.00	pcs
200	051542	Auger	1.00	pcs
140	051120	Auger bearing	1.00	pcs
30	054414	BIO90T Ash box, cpl for BWE102-262 T	1.00	pcs
55	046665	Container seal	1.00	pcs
260	016863	Countersinking screw M6x16	1.00	pcs
40	051125	Cover for ash conveyor motor	1.00	pcs
80	051124	Cup insulation	1.00	pcs
45	054342	de: Blende Aschebox BW2T	1.00	pcs
50	054343	de: Blende Aschebox rund BW2T	1.00	pcs
58	054679	de: Dichtung Flansch BW2	1.00	pcs
180	054444	de: Schieberblech BW2T	1.00	pcs
170	018309	Disc 5 DIN134	1.00	pcs
60	048573	Distance	1.00	pcs
70	012508	Friction bearing with connector	1.00	pcs

Ash conveyor (A000132)

Item no.	Article no.	Description	Quantity	Unit
220	016553	Hexagon nut M8 with flange and gearing	1.00	pcs
210	031156	Hexagon nut M10 DIN 439	1.00	pcs
230	031545	Hexagon screw M5x12 DIN 7500 (not ilustrated)	1.00	pcs
235	031549	Hexagon screw M6x12 DIN 7500	1.00	pcs
240	017086	Hexagon screw M8x20 DIN 933 (not illustrated)	1.00	pcs
250	017191	Hexagon screw M8x25 DIN 933	1.00	pcs
310	009990	Leg M10 x 40	1.00	pcs
280	016727	Lock nut M5	1.00	pcs
150	044665	Motor	1.00	pcs
120	051129	Motor insulation, front	1.00	pcs
110	051128	Motor insulation, rear	1.00	pcs
190	050686	Sliding plate	1.00	pcs
300	009546	Spring lock	1.00	pcs
320	047543	Spur gear M2 Z20	1.00	pcs
330	050869	Spur gear M2 Z36	1.00	pcs
340	048566	Spur gear M2 Z36 Ø12	1.00	pcs
270	006889	Washer Ø12	1.00	pcs
160	006888	Wheel AG 125-12	1.00	pcs

Boiler (BW2-K+BW2-K)

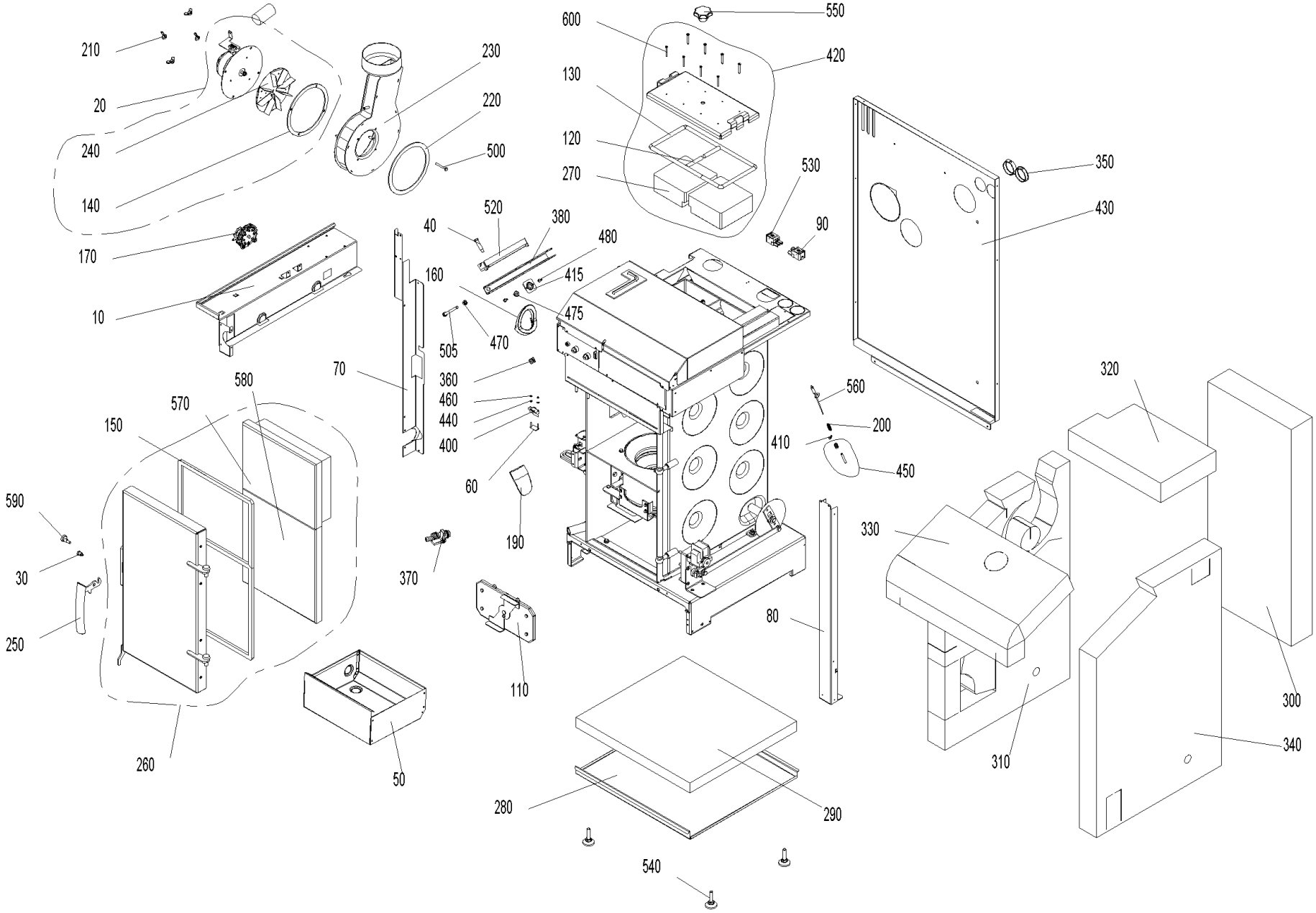

Boiler (BW2-K+BW2-K)

Item no.	Article no.	Description	Quantity	Unit
50	048928	Ash pan	1.00	pcs
160	048926	Auger tube seal	1.00	pcs
30	048881	Axle for door handle CK45	1.00	pcs
230	053234	Blower box for BioWIN102-262	1.00	pcs
140	051006	Blower box seal	1.00	pcs
220	051005	Blower seal	1.00	pcs
240	052951	Blower wheel Ø160 x 25 for BioWIN2 102 - 262	1.00	pcs
250	007480	Boiler handle	1.00	pcs
580	050447	Bottom door stone	1.00	pcs
350	004096	Cable feed-through 2400 black Ø50	2.00	pcs
360	051112	Cage nut M8	1.00	pcs
520	048975	Clamping rail	1.00	pcs
420	050477	Cleaning cover, complete	1.00	pcs
420	048870	Cleaning cover, complete	1.00	pcs
110	051056	Coasting surface cover, complete	1.00	pcs
320	048910	Coasting surface insulation	1.00	pcs
40	013813	Collar screw	1.00	pcs
200	050647	Combustion chamber sensor spring	1.00	pcs
70	051109	Cover, left	1.00	pcs
80	048609	Cover, right	1.00	pcs
10	050918	Cover plate	1.00	pcs
280	048863	Cup insulation 10-26 K BW2	1.00	pcs

Boiler (BW2-K+BW2-K)

Item no.	Article no.	Description	Quantity	Unit
600	016719	Cylinder drilling screw 4.2 x 38 DIN7504	8.00	pcs
10	048991	de: Abdeckblech BW2 21/26 BW2T	1.00	pcs
20	054674	de: Abgasgebläse inkl. Dichtung BW2-33KW, BW2-XL	1.00	pcs
140	054673	de: Dichtung Gebläsekasten BW2 33	1.00	pcs
230	054672	de: Gebläsekasten inkl. Dichtung BW2 33KW	1.00	pcs
240	054460	de: Gebläserad Ø210 33-62kW BW2T	1.00	pcs
320	048958	de: Glasfilz 22kg/m³ mit Glasseide	1.00	pcs
310	054455	de: Isolierung links BW2 33kW	1.00	pcs
310	051117	de: Isolierung links mit fadenverstärktem Vlies (natur) Glasfaser 22kg/m³	1.00	pcs
340	048907	de: Isolierung re Glasfilz 22kg/m³ mit Vlies einseitig	1.00	pcs
430	054851	de: Rückwand Kessel ET BioWIN2 und BioWIN2T 10/15 kW	1.00	pcs
430	054853	de: Rückwand Kessel ET BioWIN2 und BioWIN2T 21/26 kW	1.00	pcs
170	045404	Differential pressure watchdog	1.00	pcs
440	021474	Disc 3 DIN134	2.00	pcs
570	048914	Door stone	1.00	pcs
190	048921	Down chute	1.00	pcs
410	031274	Eyelet M6	1.00	pcs
60	051045	Fastened microswitch, complete	1.00	pcs
290	048864	Floor insulation	2.00	pcs
20	053010	Flue gas blower	1.00	pcs
260	051545	Heating door cpl. mounted	1.00	pcs
150	048916	Heating door seal	1.00	pcs

Boiler (BW2-K+BW2-K)

Item no.	Article no.	Description	Quantity	Unit
460	016551	Hexagon nut M3 DIN 934	2.00	pcs
475	016553	Hexagon nut M8 with flange and gearing	1.00	pcs
480	031545	Hexagon screw M5x12 DIN 7500 (not ilustrated)	1.00	pcs
500	021504	Hexagon screw M6x45 DIN933	4.00	pcs
505	016461	Hexagon screw M8x80 DIN 933	1.00	pcs
270	050636	Insulating stone for cleaning cover	2.00	pcs
270	051007	Insulating stone for cleaning cover	2.00	pcs
370	004385	KFE cock	1.00	pcs
310	051119	Left insulation	1.00	pcs
540	009990	Leg M10 x 40	4.00	pcs
590	051004	Locking pin	1.00	pcs
400	007632	Microswitch with lever	1.00	pcs
470	015992	Nut M8 DIN 934 V2 - LogWIN Klassik pellet ready	1.00	pcs
380	048611	Pellet container clamp	1.00	pcs
415	052484	Platelet flanged nut	1.00	pcs
530	070323	Plug, 3-pin, black	1.00	pcs
450	051069	Protective tube for combustion chamber sensor, complete	1.00	pcs
300	051116	Rear insulation	1.00	pcs
340	050924	Right insulation	1.00	pcs
120	051041	Sealing cord, short	2.00	pcs
120	051040	Sealing cord, short	2.00	pcs
130	051034	Sealing cord for cleaning cover	1.00	pcs

Boiler (BW2-K+BW2-K)

Item no.	Article no.	Description	Quantity	Unit
130	051017	Sealing cord for cleaning cover	1.00	pcs
90	070324	Socket, 3-pin, black	1.00	pcs
550	005125	Star handle M12 x 35	1.00	pcs
560	007626	Thermocouple	1.00	pcs
330	048911	Top insulation	1.00	pcs
210	019410	Wing nut M6	4.00	pcs

Burner pot 21-33 (A000027)

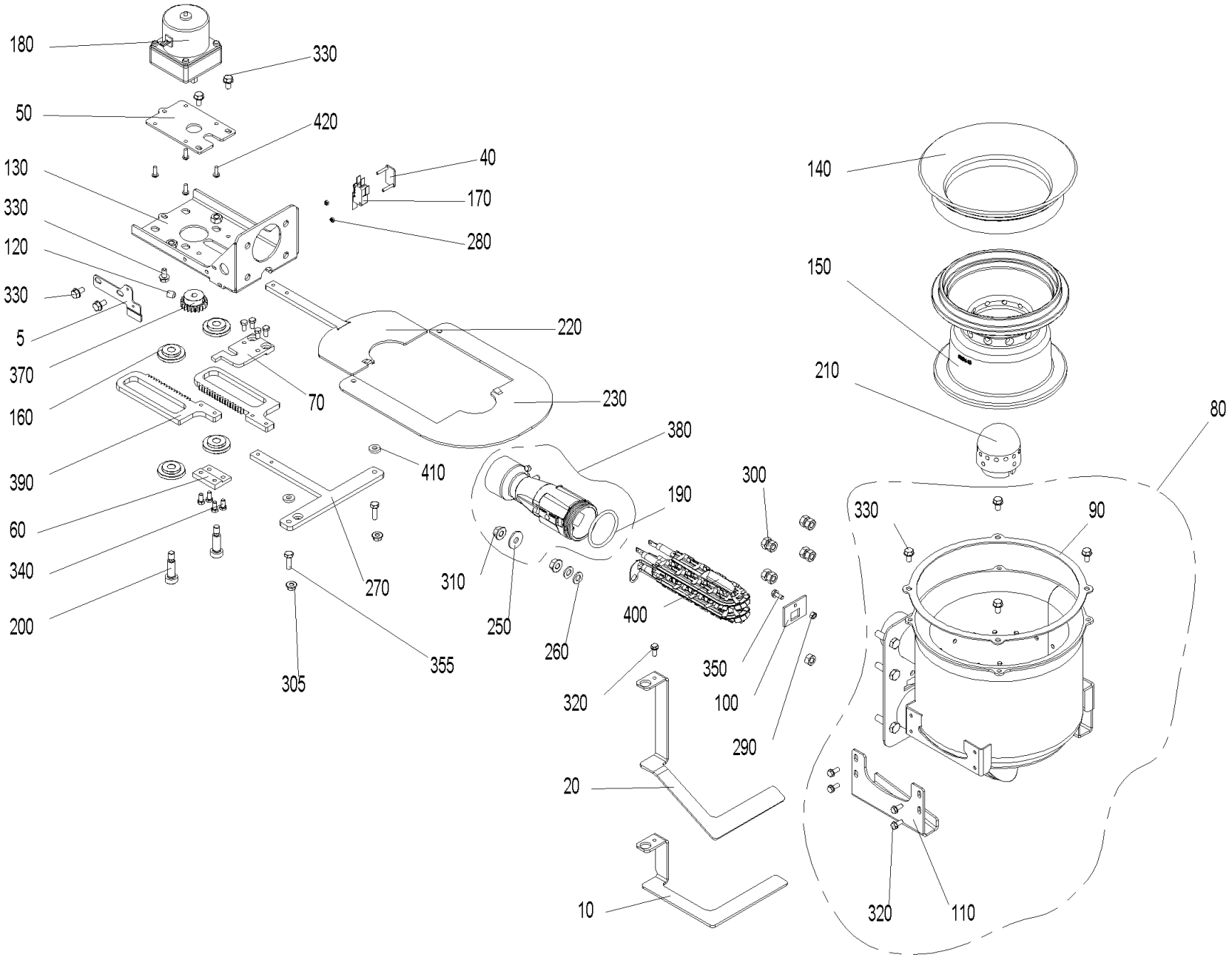

Burner pot 21-33 (A000027)

Item no.	Article no.	Description	Quantity	Unit
20	051046	Ash stop plate, Exclusive	1.00	pcs
10	051048	Ash stop plate, Klassik, Premium	1.00	pcs
160	007125	Bearing for vibrating drive	4.00	pcs
50	050632	Bracket mounting plate	1.00	pcs
80	051065	Burner	1.00	pcs
90	048861	Burner seal	1.00	pcs
125	053643	Cable - ignition element for BW1, BW2, FireWIN and VarioWIN	1.00	pcs
150	048941	Cone, bottom part for BioWIN2 21/26	1.00	pcs
140	050642	Cone, top part 45°	1.00	pcs
420	016780	Cylinder screw M4x12 DIN 7985	4.00	pcs
350	015025	de: Sechskantschraube DIN 933 - M5x16 - 8.8 - verzinkt	1.00	pcs
240	021474	Disc 3 DIN134	2.00	pcs
260	024779	Disc 8 ISO 7089	2.00	pcs
250	031755	Disc 8 ISO 7093	1.00	pcs
100	048841	Driving rod feed-through	1.00	pcs
40	051045	Fastened microswitch, complete	1.00	pcs
220	051051	Grate plate, left	1.00	pcs
230	053539	Grate plate, right	1.00	pcs
110	048842	Grate plate guide	1.00	pcs
270	051023	Grate plate scraper	1.00	pcs
280	016551	Hexagon nut M3 DIN 934	2.00	pcs
290	017035	Hexagon nut M5 DIN 934	1.00	pcs

Burner pot 21-33 (A000027)

Item no.	Article no.	Description	Quantity	Unit
300	031153	Hexagon nut M8 DIN 934	9.00	pcs
310	016553	Hexagon nut M8 with flange and gearing	2.00	pcs
305	016566	Hexagon nut with flange and gearing M6	2.00	pcs
340	016756	Hexagon screw M5x10 DIN 933	4.00	pcs
320	031545	Hexagon screw M5x12 DIN 7500 (not ilustrated)	5.00	pcs
330	031549	Hexagon screw M6x12 DIN 7500	7.00	pcs
355	015471	Hexagon screw M6x20 DIN 933	2.00	pcs
400	055201	Ignition element BioWIN10-26, FireWIN from lot 15, VarioWIN from lot 15 BioWIN XL, LWK	1.00	pcs
402	053851	Ignition element with cable	1.00	pcs
410	051054	Intermediate plate	2.00	pcs
170	007632	Microswitch with lever	1.00	pcs
60	050649	Mounting plate	1.00	pcs
70	051042	Mounting plate, top	1.00	pcs
190	006849	O-ring FPM70 45 x 4	1.00	pcs
210	047774	Primary air pin for BioWIN10-26 FireWIN bis Los9 und PMX 21-26	1.00	pcs
120	033112	Setscrew M8x10 DIN916	1.00	pcs
130	050639	Shake-out bracket	1.00	pcs
180	012561	Shake-out motor	1.00	pcs
200	017048	Shoulder screw M8 10x25 ISO 7379	2.00	pcs
370	007222	Spur gear M1,5; Z21	1.00	pcs
390	048161	Steering rack BioWin2 10-26	2.00	pcs
5	053544	Stop plate	1.00	pcs

Burner pot 21-33 (A000027)

Item no.	Article no.	Description	Quantity	Unit
380	051067	Venturi nozzle	1.00	pcs

Cladding (A000133)

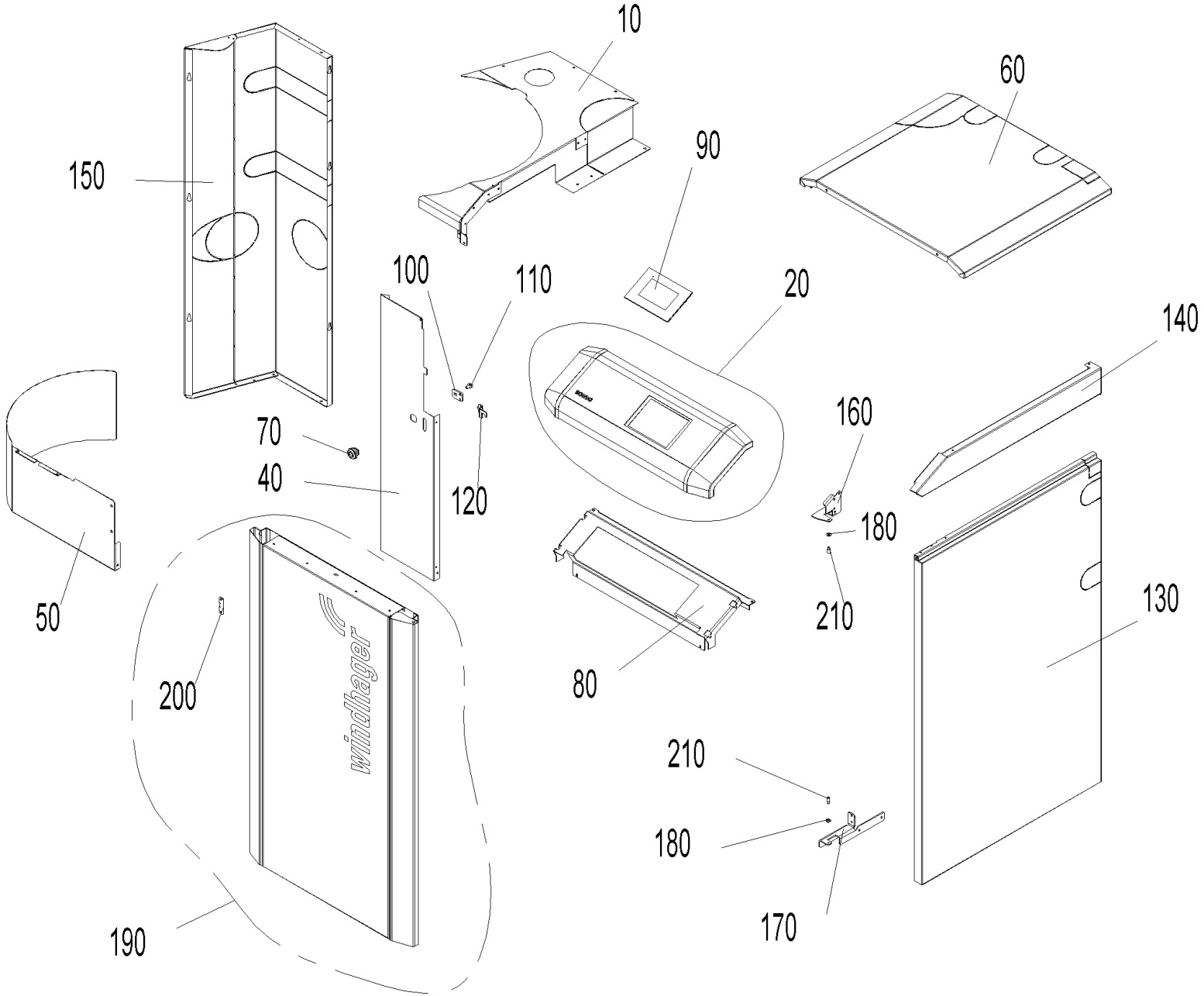

Cladding (A000133)

Item no.	Article no.	Description	Quantity	Unit
120	047893	Clamping plate	1.00	pcs
220	018139	Cylinder screw 4.2x13 DIN7981SP (not illustrated)	1.00	pcs
10	054443	de: Abdeckung hinten links BW2T 10/15	1.00	pcs
10	054442	de: Abdeckung hinten links kpl. BW2T 21/26	1.00	pcs
20	054440	de: Bedienfeld kpl. BW2T	1.00	pcs
40	054356	de: Blende links BW2T	1.00	pcs
50	054344	de: Blende Pelletsbehälter BW2T	1.00	pcs
60	054121	de: Deckel beschichtet RAL 7012, BW2T 10/15	1.00	pcs
60	054132	de: Deckel beschichtet RAL 7012, BW2T 21/26	1.00	pcs
80	054072	de: Haltekonsole BW2T	1.00	pcs
150	054353	de: Seitenwand links BW2T 10/15	1.00	pcs
150	054355	de: Seitenwand links BW2T 21/26	1.00	pcs
130	054359	de: Seitenwand rechts BW2T 10/15	1.00	pcs
130	054360	de: Seitenwand rechts BW2T 21/26	1.00	pcs
140	054075	de: Seitenwand rechts oben BW2T 10/15	1.00	pcs
140	054325	de: Seitenwand rechts oben BW2T 21/26	1.00	pcs
160	054077	de: Türlager oben BW2T	1.00	pcs
170	054076	de: Türlager unten BW2T	1.00	pcs
190	054441	de: Verkleidungstür kpl. BW2T	1.00	pcs
180	018309	Disc 5 DIN134	1.00	pcs
210	015507	Dog point screw	1.00	pcs
100	047891	Driver	1.00	pcs

Cladding (A000133)

Item no.	Article no.	Description	Quantity	Unit
110	031549	Hexagon screw M6x12 DIN 7500	1.00	pcs
90	001009	INF8 MES INFINITY InfoWIN Touch	1.00	pcs
200	047892	Locking plate	1.00	pcs
70	012256	Turning bolt	1.00	pcs

Control panel (A000131)

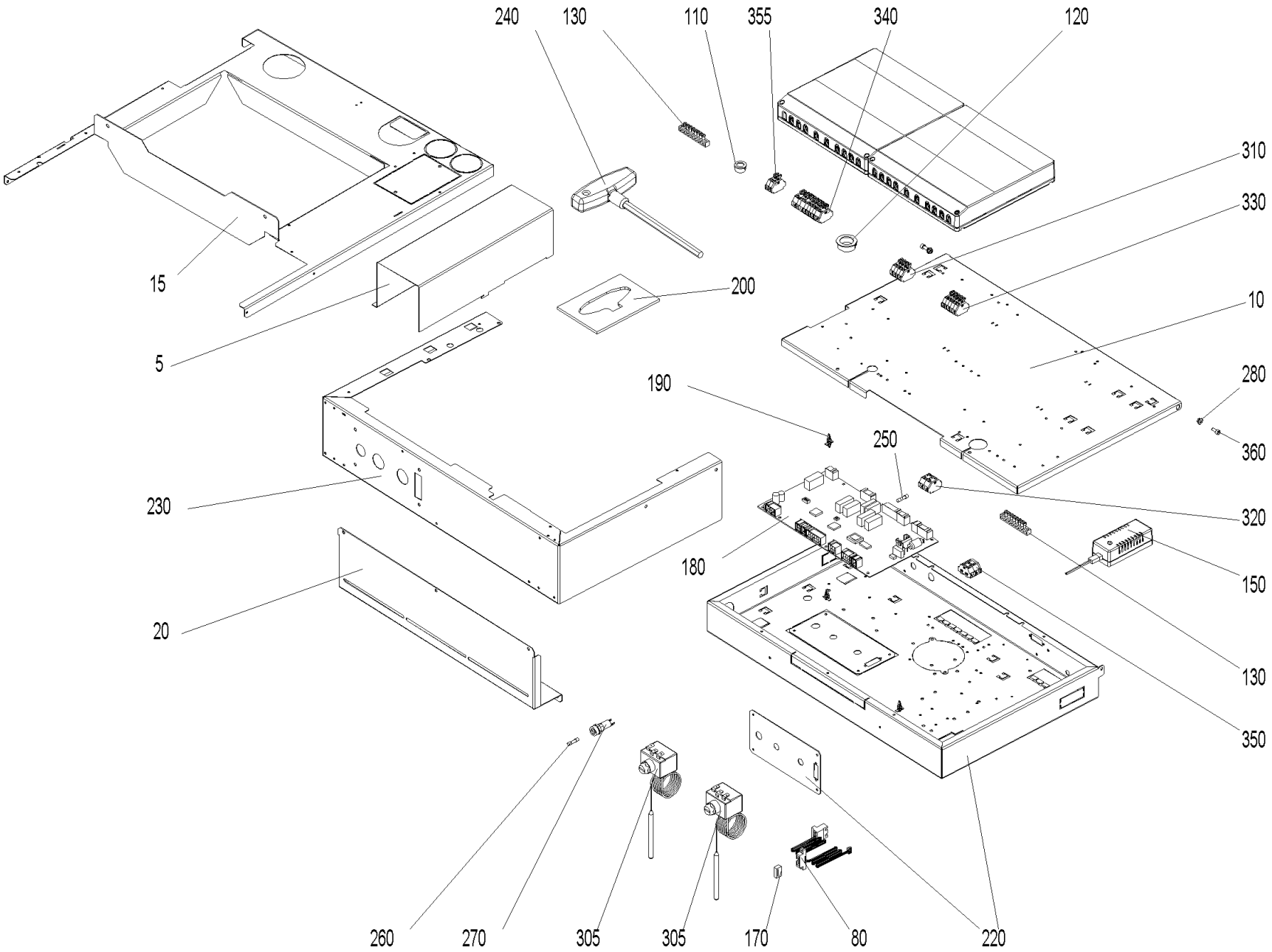

Control panel (A000131)

Item no.	Article no.	Description	Quantity	Unit
260	003228	6.3A fuse (not illustrated)	1.00	pcs
110	009542	Cable feed-through	1.00	pcs
370	018140	Cylinder screw 4.2x13 DIN7981ST (not illustrated)	1.00	pcs
5	054093	de: Abdeckung Kabelkanal BW2 10/15, BW2T 10/15	1.00	pcs
5	054334	de: Abdeckung Kabelkanal BW2 21/26, BW2T 21/26	1.00	pcs
10	053779	de: Deckel Schaltfeld BW2T, LWPT	1.00	pcs
15	054090	de: Haltekonsole Schaltfeld 10/15 BW2T	1.00	pcs
15	054097	de: Haltekonsole Schaltfeld 21/26 BW2	1.00	pcs
80	009605	de: Kabel - LON LWPT, BWXL2, BW2, BW2T	1.00	pcs
90	050976	de: Kabelbaum 12V BW2, BW2T	1.00	pcs
30	054294	de: Kabelbaum 230V BW2T	1.00	pcs
100	054296	de: Kabelbaum AAT+HFR BW2T	1.00	pcs
120	009536	de: Kabeldurchführung 2160 schwarz Ø 28	1.00	pcs
40	054292	de: Kabel Netz BW2T	1.00	pcs
50	054291	de: Kabel Saugturbine BW2T	1.00	pcs
60	054293	de: Kabel Saugzuggebläse BW2T	1.00	pcs
70	054290	de: Kabel STB BW2T	1.00	pcs
180	012016	de: Platine Feuerungsautomat FMP BW2T 33KW	1.00	pcs
200	054438	de: Position Sechskantsch. BW2T	1.00	pcs
230	054089	de: Schaltfeld Boden BW2T	1.00	pcs
220	052994	de: Schaltfeld Unterteil BW2T, LWPT	1.00	pcs
280	016564	de: Sperrzahnmutter M4 verzinkt	1.00	pcs

Control panel (A000131)

Item no.	Article no.	Description	Quantity	Unit
300	007624	de: Thermoelement 2AB NM30/110 mm TI/DI 2AB25 2,5 (Brennkammer- bzw. Thermocontrollfühler) Länge - Anschlußkabel 900mm	1.00	pcs
310	006835	de: Wagoblock 261 5tlg."ext. Wärme" 1-4 PMX, BW2T, LWPT	1.00	pcs
360	016782	de: Zylinderschraube m. Innensechskant ISO 4762 - M 4 x 10 - 8.8 - verzinkt (DIN 912)	1.00	pcs
250	006900	Fuse 1 A T 5x20 ceramic tube	1.00	pcs
270	003663	Fuse holder	1.00	pcs
240	027392	Hexagon pin key with T-handle 10x200 for VarioWIN, BioWIN XL 35-60	1.00	pcs
210	007629	Immersion sensor PT 1000 (not illustrated)	1.00	pcs
290	502186	MES009M Immersion sensor	1.00	pcs
140	018190	Oval-head screw 3.2x16 (not illustrated)	1.00	pcs
180	011990	PCB, FMP BW2	1.00	pcs
190	007609	PCB holder	1.00	pcs
170	005784	Pin connector (not illustrated)	1.00	pcs
150	051645	Power supply unit 12V	1.00	pcs
20	048902	Retaining plate	1.00	pcs
130	009929	Terminal bar MS 8-pin 8x8mm for VarioWIN,FireWIN, BioWIN XL 35-60	1.00	pcs
305	005672	Thermostat LS1+100-6U	1.00	pcs
330	006719	Wago terminal block 261 6-pce. heating requirement/probe switching for BioWIN 10-26, BioWIN XL 35-60 (*not illustrated)	1.00	pcs
355	009948	Wago terminal block 261; 2-pin WMS 1-2, 3-piece for VarioWIN, FireWIN	1.00	pcs
350	006833	Wago terminal block 261; 4-pin "12V GND"	1.00	pcs
320	006834	Wago terminal block 261; 4-pin "safety 1-4"	1.00	pcs
340	009891	Wago terminal block 261; 11-pin safety 1-11 for FireWIN, VarioWIN	1.00	pcs

Heating surface cleaning (A000184)

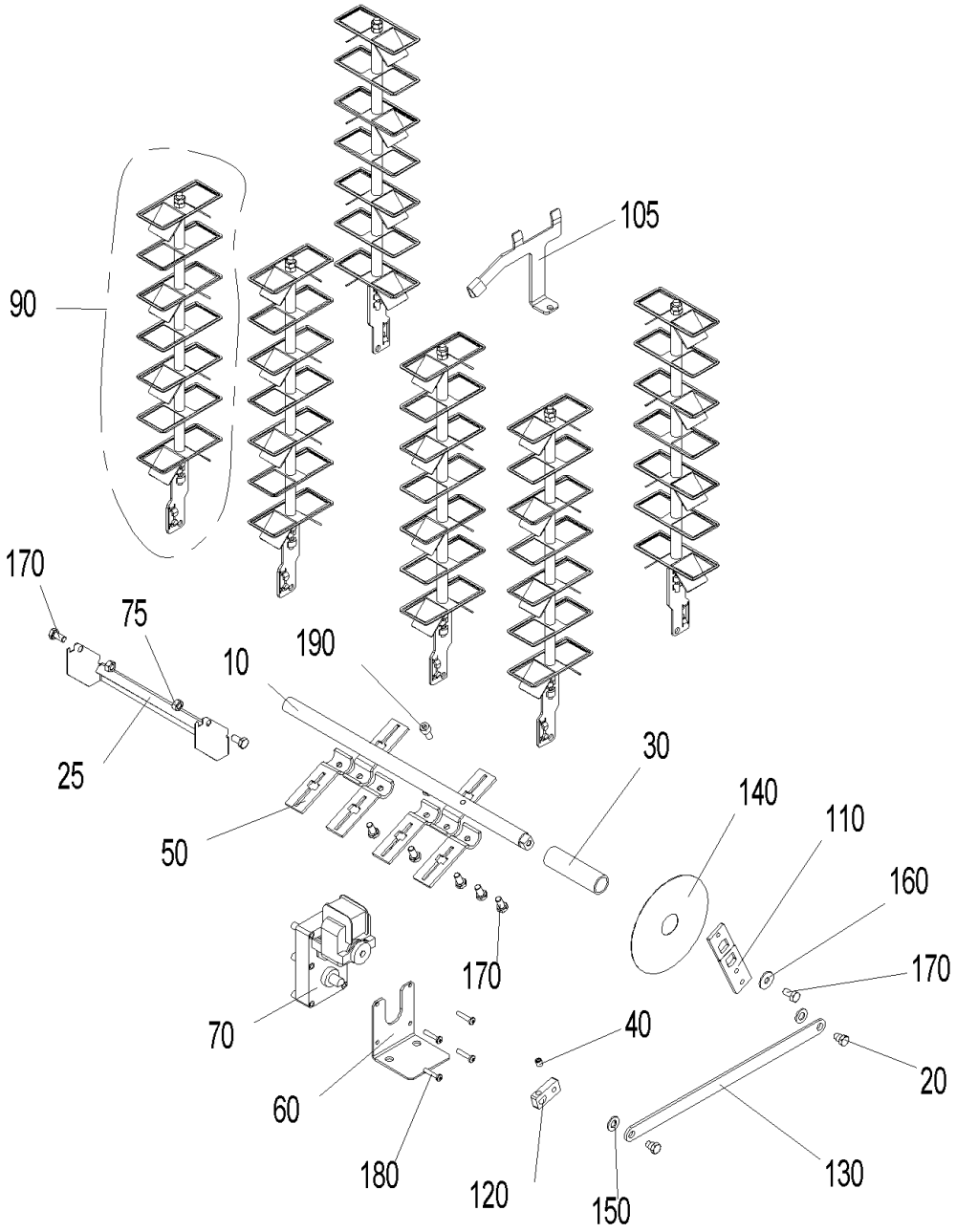

Heating surface cleaning (A000184)

Item no.	Article no.	Description	Quantity	Unit
25	051624	Ash sheet	1.00	pcs
10	048882	Axle heating surface BW2 10-26	1.00	pcs
105	051076	Cleaning plate for combustion chamber	1.00	pcs
20	012502	Collar screw	1.00	pcs
180	016837	Cylinder screw M5x25 ISO 7045	1.00	pcs
190	016773	Cylinder screw M8x16 ISO 4762	1.00	pcs
90	054671	de: Putzleiste Turbulator mont. BW2T 33	1.00	pcs
140	051122	Disc	1.00	pcs
160	031755	Disc 8 ISO 7093	1.00	pcs
150	024780	Disc 10 ISO7089	1.00	pcs
30	048980	Distance rod	1.00	pcs
170	016721	Hexagon screw M8x16 DIN 933	1.00	pcs
60	051121	L-bracket, motor HFR	1.00	pcs
50	051547	Lever for cleaning heating surfaces	1.00	pcs
70	044665	Motor	1.00	pcs
75	015992	Nut M8 DIN 934 V2 - LogWIN Klassik pellet ready	1.00	pcs
40	033112	Setscrew M8x10 DIN916	1.00	pcs
110	048884	Shaker lever 1	1.00	pcs
120	048885	Shaker lever 2	1.00	pcs
130	051367	Shaker lever 3	1.00	pcs

Pellet hopper (A000130)

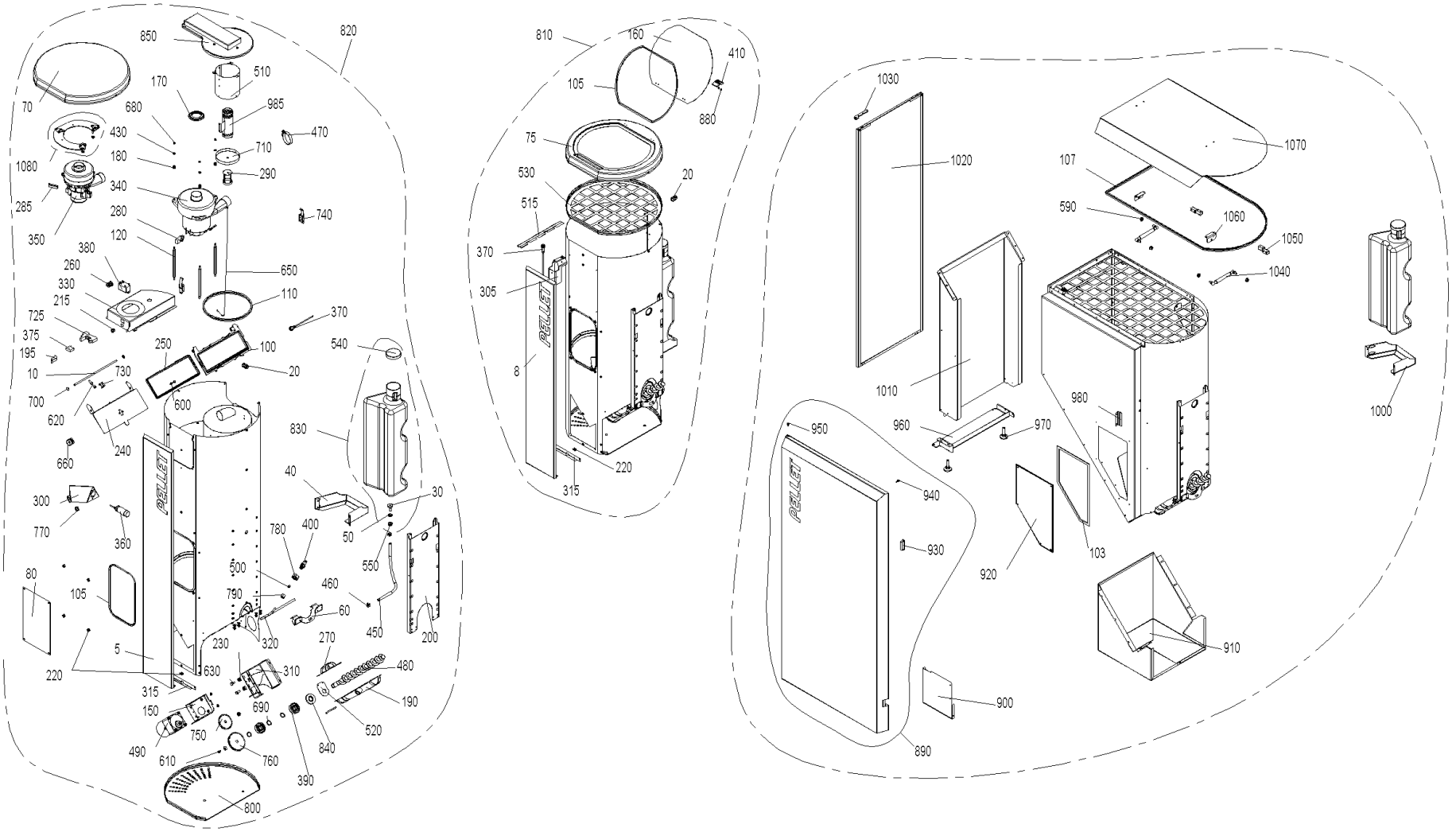

Pellet hopper (A000130)

Item no.	Article no.	Description	Quantity	Unit
330	050866	Air duct	1.00	pcs
480	051544	Auger	1.00	pcs
310	048891	Auger motor bracket	1.00	pcs
490	050901	Auger motor SPG	1.00	pcs
320	050867	Back-burn safeguard lead	1.00	pcs
725	005043	Base for relay	1.00	pcs
810	054409	BIO91T Reserve supply container for BW2 T Klassik	1.00	pcs
340	044667	Blower motor 122151-12 for feed Conversion instructions for use with PMX 15-26 are enclosed! for BioWIN 10-26, PMX,BioWIN XL 35-6	1.00	pcs
170	031253	Blower seal	1.00	pcs
195	005077	Bracket	1.00	pcs
400	042510	Burn-back protection completely assembled for PMX, BioWIN 10-26	1.00	pcs
380	005067	BW2 Relay 30A 250V	1.00	pcs
650	031258	Cable	1.00	pcs
215	009542	Cable feed-through	1.00	pcs
210	045048	Cable feed with relay	1.00	pcs
660	031261	Cable pulley	1.00	pcs
220	051388	Cage nut M5	1.00	pcs
230	051112	Cage nut M8	1.00	pcs
280	006859	Carbon brushes for blower motor	1.00	pcs
130	051386	Cheese head screw M5x10 Taptite	1.00	pcs
270	048967	Clamp collar	1.00	pcs
730	045952	Clamping piece for cable	1.00	pcs

Pellet hopper (A000130)

Item no.	Article no.	Description	Quantity	Unit
103	046665	Container seal	1.00	pcs
670	031096	Countersinking screw M4x20 DIN965 gv KS (not illustrated)	1.00	pcs
910	051755	CoverPB BioWIN2	1.00	pcs
500	006378	Cutting ring DL8 07-151	1.00	pcs
850	053466	Cyclone cover	1.00	pcs
850	046166	Cyclone cover, fully sealed, new ET for BioWIN 10-26 from batch 30	1.00	pcs
860	019836	Cylinder screw 2.9x16 (not illustrated)	1.00	pcs
870	018139	Cylinder screw 4.2x13 DIN7981SP (not illustrated)	1.00	pcs
880	016768	Cylinder screw M3x5	1.00	pcs
950	004237	Cylinder screw M5x10 ISO 4762 (not illustrated)	1.00	pcs
80	050868	de: +Deckel Vorratsbehälter BW2	1.00	pcs
8	054363	de: Abdeckblende Pelletsbehälter Klassik BW2T	1.00	pcs
5	054361	de: Abdeckblende Pelletsbehälter Premium BW2T	1.00	pcs
820	054408	de: BIO92T Pelletsbehälter BW2 T Premium/Exklusiv (für Sauglängen bis 25m)	1.00	pcs
900	054350	de: Blende PB Basaltgrau BW2T	1.00	pcs
70	054346	de: Deckel Pelletsbehälter BW2T	1.00	pcs
1070	054365	de: Deckel Pelletsbehälter BW2T	1.00	pcs
75	054348	de: Deckel Pelletsbehälter Klassik BW2T	1.00	pcs
140	053887	de: Flachkopfschraube 5x10	1.00	pcs
160	054349	de: Fülldeckel Basaltgrau BW2T	1.00	pcs
285	054653	de: Kohlebürstenset (2Stk.) zu Motor-Saugturbine 230V ebetec für Pellets-Zuführung 15m BW2T	1.00	pcs
300	048970	de: Konsole Näherungsschalter BW2T	1.00	pcs

Pellet hopper (A000130)

Item no.	Article no.	Description	Quantity	Unit
315	054424	de: L-Wi. Abdeckblende BW2T	1.00	pcs
350	006242	de: Motor -Saugturbine 15m, 230V, 1450W BW2T	1.00	pcs
360	007635	de: Näherungsschalter kapazitiv EC 3025 NPAPL mit Anschlußkabel 0,3m	1.00	pcs
520	048971	de: Schutzblech für Pelletsschnecke BW2, BW2T	1.00	pcs
1020	054352	de: Seitenwand links Pelletsbehälter BW2T	1.00	pcs
1030	051752	de: Türlager oben Pelletsbehälter BW2T	1.00	pcs
890	054439	de: Verkleidungstür PB BW2T	1.00	pcs
1080	054449	de: Zwischenplatte Gebläse montiert BW2, BW2T	1.00	pcs
430	018309	Disc 5 DIN134	1.00	pcs
440	031753	Disc 6 ISO 7093	1.00	pcs
120	031256	Distance bolt	1.00	pcs
960	051753	Door mounting, bottom	1.00	pcs
60	048974	Fastening bracket	1.00	pcs
10	042452	Feed axle	1.00	pcs
150	051114	Flange, auger motor	1.00	pcs
250	031257	Flap seal	1.00	pcs
1040	012600	Gas spring 4534DS 0100 N	1.00	pcs
770	003208	Grommet 10x17.5x1.2	1.00	pcs
390	012499	Grooved ball bearing	1.00	pcs
190	053540	Half-collar auger tube	1.00	pcs
570	016586	Hexagon nut M5 DIN 934	1.00	pcs
560	016565	Hexagon nut M5 with flange and gearing (not illustrated)	1.00	pcs

Pellet hopper (A000130)

Item no.	Article no.	Description	Quantity	Unit
580	016594	Hexagon nut M6 DIN 934	1.00	pcs
590	016553	Hexagon nut M8 with flange and gearing	1.00	pcs
550	016567	Hexagon nut M10 with flange and gearing (not illustrated)	1.00	pcs
600	031545	Hexagon screw M5x12 DIN 7500 (not ilustrated)	1.00	pcs
610	017051	Hexagon screw M6x12 DIN 933 (not illustrated)	1.00	pcs
620	021504	Hexagon screw M6x45 DIN933	1.00	pcs
630	015134	Hexagon screw M8x16 DIN 933	1.00	pcs
640	017086	Hexagon screw M8x20 DIN 933 (not illustrated)	1.00	pcs
410	050990	Hinge M345	1.00	pcs
450	008915	Hose 7x2	1.00	m
470	006875	Hose clip 40-60	1.00	pcs
460	006874	Hose clip ABA 11	1.00	pcs
1060	051751	L-bracket	1.00	pcs
970	009990	Leg M10 x 40	1.00	pcs
690	016171	Locking ring Ø20x1.2	1.00	pcs
680	016727	Lock nut M5	1.00	pcs
700	006897	Lock washer Ø 6	1.00	pcs
930	001760	Magnetic lock, black - VW, LWP18-50, LWK	1.00	pcs
980	051773	Magnetic sheet	1.00	pcs
920	051754	Maintenance cover BioWIN2	1.00	pcs
20	006340	Mount connections PG9	1.00	pcs
375	005026	OKE9281 Cable protection plate	1.00	pcs

Pellet hopper (A000130)

Item no.	Article no.	Description	Quantity	Unit
510	045951	Partition plate	1.00	pcs
510	052480	Partition plate	1.00	pcs
1010	051614	Pedestal	1.00	pcs
800	048986	Pellet container cladding	1.00	pcs
290	042035	Piston	1.00	pcs
540	051397	Protection cover GPN 690	1.00	pcs
515	051790	Protection plate for cable BW2	1.00	pcs
305	051786	Proximity switch bracket lid	1.00	pcs
370	006832	Proximity switch M12, inductive	1.00	pcs
240	045955	Receptacle flap	1.00	pcs
105	053465	Reserve supply container seal	1.00	pcs
200	048976	Retaining bracket, pellet tank	1.00	pcs
180	009559	Rubber grommet DK 6-9-12-7	1.00	pcs
100	031254	Seal frame	1.00	pcs
107	053467	Seal profile reserve supply container 200 kg	1.00	pcs
110	042232	Seal section	1.00	pcs
840	048903	Shaft seal ring DIN 3760AS AD52 ID20	1.00	pcs
710	045949	Sieve with eye	1.00	pcs
940	000299	Silicone buffer	1.00	pcs
1050	044802	Southco hinge	1.00	pcs
740	009546	Spring lock	1.00	pcs
750	050869	Spur gear M2 Z36	1.00	pcs

Pellet hopper (A000130)

Item no.	Article no.	Description	Quantity	Unit
760	045771	Spur gear M2 Z45	1.00	pcs
985	052482	Suction pipe	1.00	pcs
50	006851	Support plate, motor	1.00	pcs
260	000965	Terminal, 3-pin	1.00	pcs
420	018058	U-washer	1.00	pcs
780	013749	Union nut 3/8"	1.00	pcs
790	006351	Union nut ML8 GV	1.00	pcs
30	006877	Water connection	1.00	pcs
830	050379	Water tank	1.00	pcs
40	051107	Water tank support	1.00	pcs
1000	051771	Water tank support	1.00	pcs

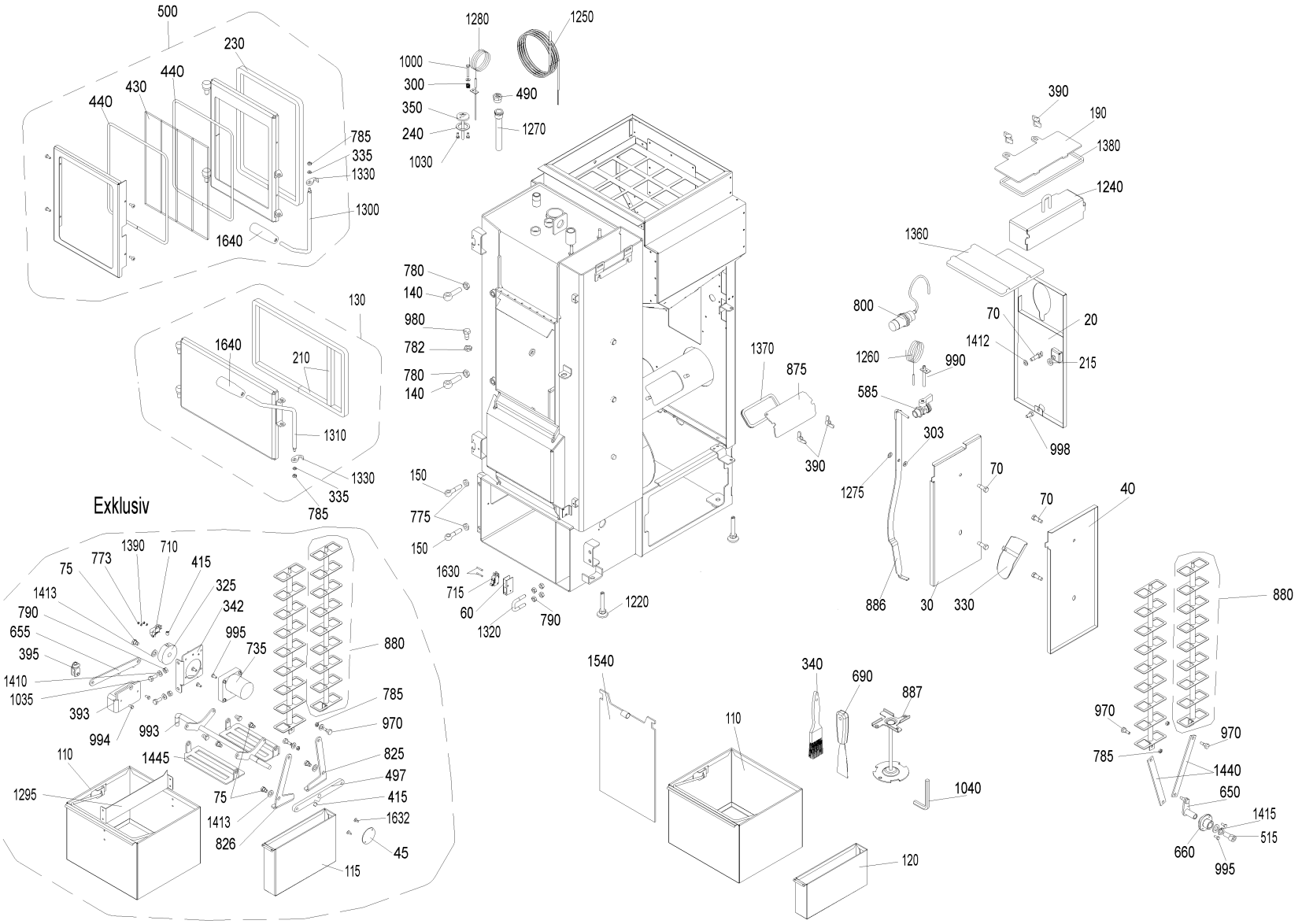
500
230
440
430
440
785
335
1330
1300
1640
130
1640
210
1310
1330
335
785
Exklusiv
1390
710
773
75
415
325
1413
342
790
995
655
735
395
880
1410
785
1035
970
393
994
993
825
110
1445
497
1295
75
415
1413
1632
826
45
115
1280
1250
1000
300
490
350
240
1270
1030
780
140
980
782
780
140
1370
875
390
150
775
150
1630
715
60
1320
790
1220
390
190
1380
1240
1360
800
70
20
1412
1260
990
215
585
998
303
1275
70
886
30
330
70
40
880
970
785
970
1440
650
1415
515
660
995
1540
340
690
887
110
1040
120

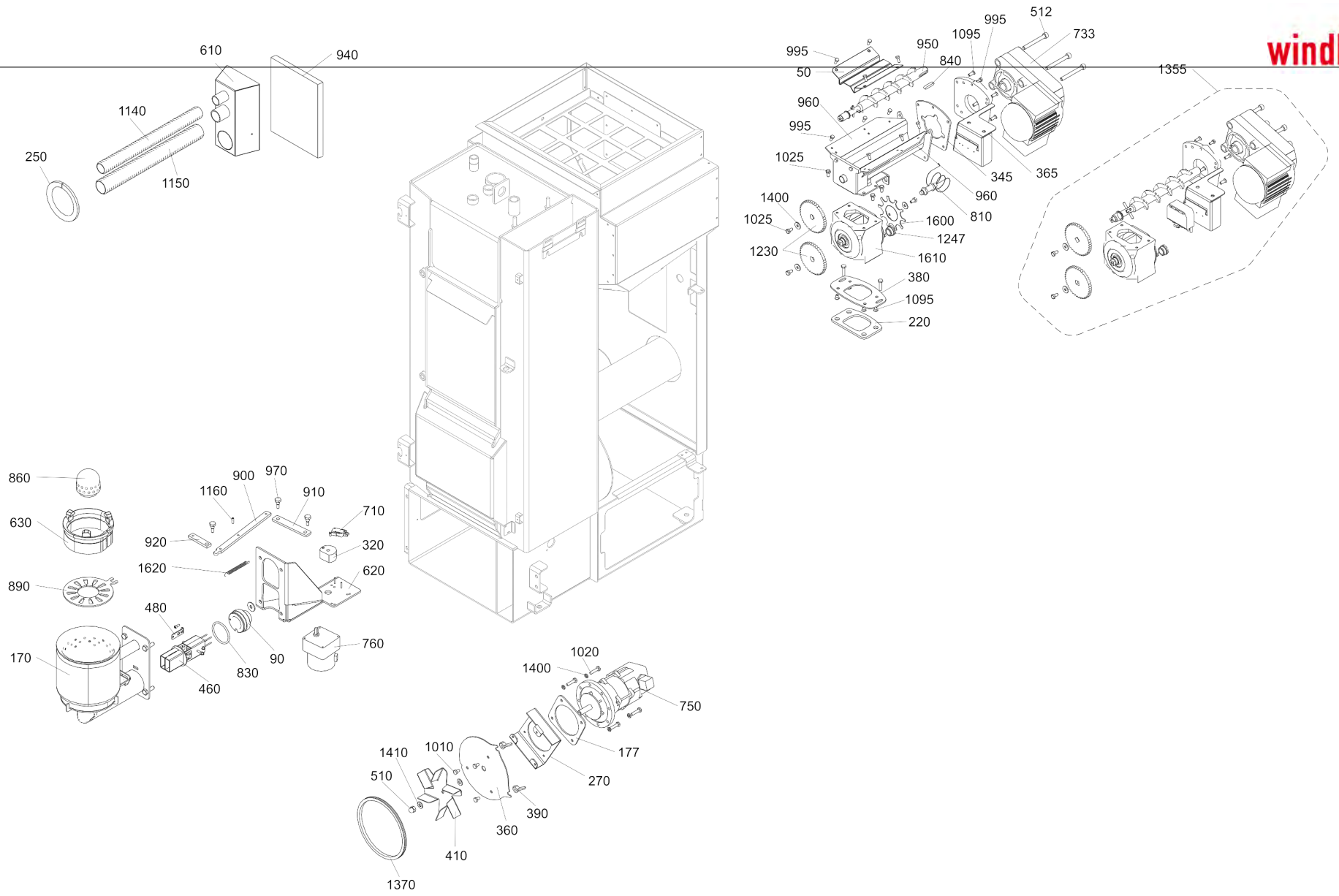
610
940
1140
250
1150
995
50
950
840
995
1095
512
733
960
995
1025
345
365
960
810
1400
1025
1600
1247
1230
1610
380
1095
220
1355
860
630
890
900
970
1160
910
710
920
320
1620
620
480
760
170
460
830
90
1020
1400
750
177
270
1410
1010
510
390
360
410
1370

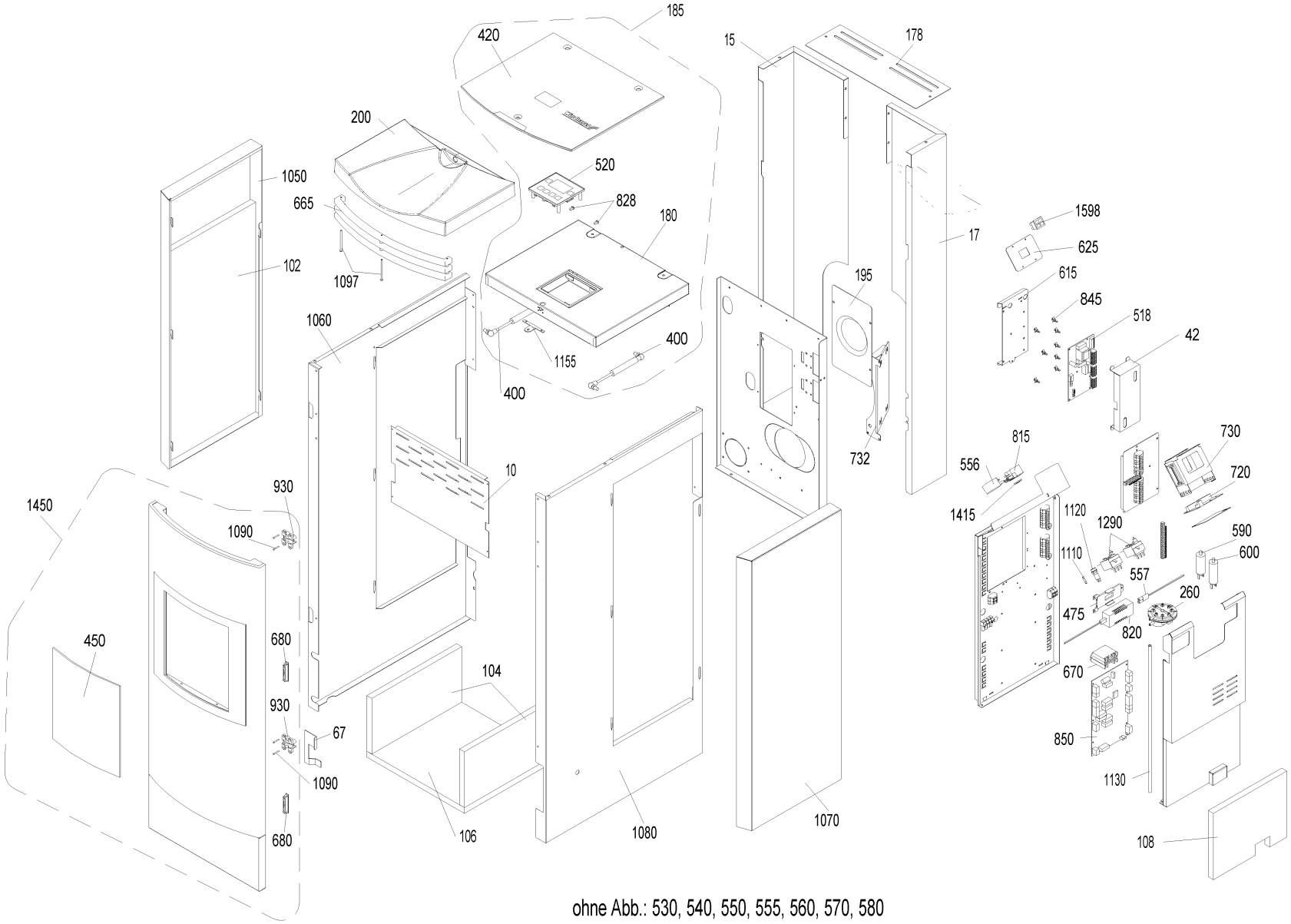

ohne Abb.: 530, 540, 550, 555, 560, 570, 580

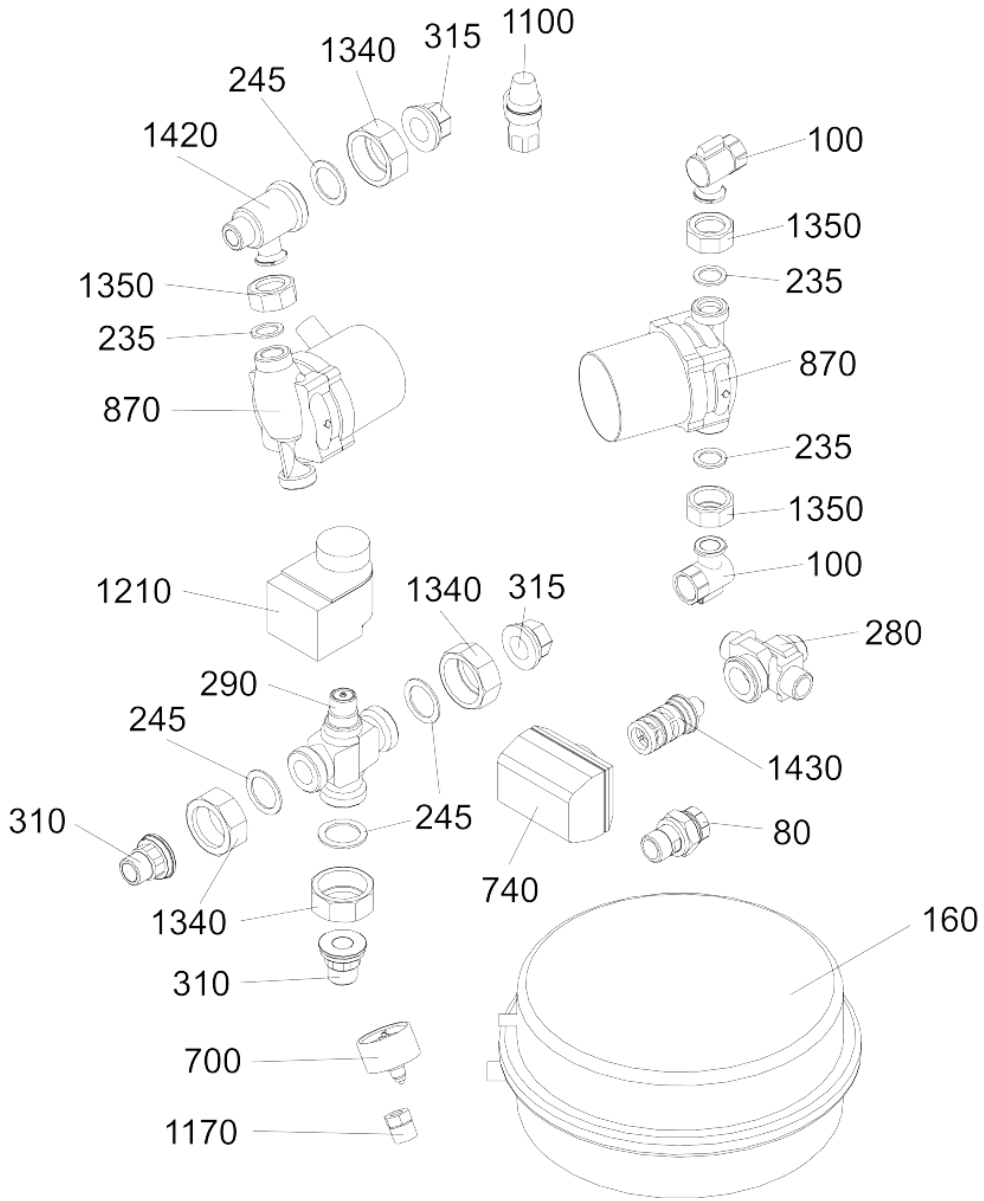
1100
315
1340
245
1420
100
1350
235
870
1350
235
870
235
1350
100
280
1210
1340
315
290
245
1430
245
310
80
740
1340
160
310
700
1170

Item no.	Article no.	Description	Serialnumber from	Serialnumber t
10	044581	Front cover plate for FireWIN	0	200501999
15	045631	Left cover platinum silver for FireWIN	0	200501999
15	045757	Left cover quartz beige for FireWIN	0	200501999
17	045633	Right cover plate platinum silver for FireWIN	0	200501999
17	045758	Right cover plate quartz beige for FireWIN	0	200501999
20	044861	Rear cover plate FireWIN	0	200501999
30	044626	Left cover for VarioWIN, FireWIN	0	200501999
40	044368	Right cover for VarioWIN, FireWIN	0	200501999
42	051690	Cover BUML incl. Sticker	0	200501999
45	044518	Base cover for VarioWIN, FireWIN	0	200501999
50	044376	Auger cover for VarioWIN, FireWIN	0	200501999
60	044526	Cover door safety switch for FireWIN	0	200501999
65	016397	Drainage line 18x1 for FireWIN	0	200501999
67	045037	Adapter plate door switch - Only for batch 1 ! - for FireWIN	0	200501999
70	013804	Collar screw M8x27 for VarioWIN, FireWIN	0	200501999
75	012502	Collar screw	0	200501999
80	012091	Connection coupling 3/4“ with Aqua-Stop for male thread for VarioWIN, FireWIN	0	200501999
90	007647	Connection piece, primary air for VarioWIN, FireWIN	0	200501999
100	012063	Connection bracket 1“-3/4“ for VarioWIN, FireWIN	0	200501999
101	502869	FIRE090 Fresh air flap control for FireWIN, VarioWIN	0	200501999
102	031248	Absorption mat 715 x 351 x 20 material: S490-020 for FireWIN	0	200501999
104	031247	Absorption mat 354 x 190 x 20 material: S490-020 for FireWIN	0	200501999
106	031246	Absorption mat 385 x 354 x 20 material: S280-020 for FireWIN	0	200501999
108	031245	Absorption mat for control panel 290 x 226 material: S490-020 for FireWIN	0	200501999
110	046233	Ash pan for FireWIN/VarioWIN - classic/premium/exclusive	0	200501999
115	045622	Coasting surface ash pan, exclusive for VarioWIN, FireWIN	0	200501999
120	503366	Coasting surface ash pan, Classic/ Premium for VarioWIN, FireWIN	0	200501999
130	044895	Ash door, complete for VarioWIN, FireWIN	0	200501999
135	045919	Driving rod seating bracket for VarioWIN, BioWIN 10-26 from batch 30, FireWIN	0	200501999
140	033432	Eyebolt similar to DIN 444 - B M10x50 - 4.6 - bright for VarioWIN, FireWIN, VestoWIN Premium 200-202, VestoWIN Klassik 170-220	0	200501999
150	033433	Eyebolt similar to DIN 444 - B M12x50 - 4.6 - bright for VarioWIN, FireWIN,EasyWIN Klassik/Premium 180,LogWIN Premium 180-505	0	200501999
160	003610	Expansion tank DXM 12 G3/8“ for FireWIN, VarioWIN	0	200501999
165	012538	Cover Ø17 for FireWIn from batch 10	0	200501999
170	044700	Burner FireWIN	0	200501999
172	002519	Long bend - 1/2“ - No. 3 - black for VarioWIN, FireWIN, GKX	0	200501999
175	070324	Socket, 3-pin, black	0	200501999
177	031244	Blower motor damping mat material: S400-003 for FireWIN, VarioWIN	0	200501999
178	045759	Top cover plate platinum silver for FireWIN	0	200501999
178	045760	Top cover plate quartz beige for FireWIN	0	200501999
180	044906	Rear cover complete granite for VarioWIN	0	200501999
180	044907	Rear cover complete titanium for FireWIN	0	200501999
180	044908	Rear cover complete garnet for FireWIN	0	200501999
180	044909	Rear cover complete pearl white for FireWIN	0	200501999
185	044890	FIRE74 Rear cover mounted granite for reservoir for FireWIN	0	200501999
185	044891	FIRE78 Rear cover mounted garnet for reservoir for FireWIN	0	200501999
185	044892	FIRE80 Rear cover mounted pearl white for reservoir for FireWIN	0	200501999
185	044929	FIRE76 Rear cover mounted titanium for reservoir for FireWIN	0	200501999
190	044477	heating surface cover for FireWIN, VarioWIN	0	200501999
195	044516	Rear wall cover for FireWIN, VarioWIN	0	200501999
200	044901	Front cover complete granite for FireWIN	0	200501999
200	044902	Front cover complete titanium for FireWIN	0	200501999

Item no.	Article no.	Description	Serialnumber from	Serialnumber
200	044904	Front cover complete pearl white for FireWIN	0	200501999
200	044913	Front cover complete garnet for FireWIN	0	200501999
210	006840	Seal 16x15 mm	0	200501999
215	013426	Seal 20 x 10 x 3 KP1260/220 for FireWIN	0	200501999
220	031241	Downpipe seal 115.5x73.7x5 for FireWIN, VarioWIN	0	200501999
230	044586	Heating door seal for FireWIN	0	200501999
235	016152	ZH 094 Klingerit seal 1/2" (30x21x2mm) for AccuWIN, AccuWIN Solar, VarioWIN, FireWIN	0	200501999
240	003019	Seal flange combustion chamber sensor VarioWIN and FireWIN	0	200501999
240	016160	Klingerit seal 3/4“ (38x27x2 mm) for VarioWIN, FireWIN	0	200501999
245	016179	Gasket 1“ 44 x 3 x 2 mm for VarioWIN, FireWIN	0	200501999
250	044905	Seal section 461 0069 for FireWIN, VarioWIN	0	200501999
260	045404	Differential pressure watchdog	0	200501999
270	044490	Spacer plate for FireWIN, VarioWIN	0	200501999
280	000397	Three-way valve 3/4” male thread AG VCZMG6000E for FireWIN, MIRA, Xenta	0	200501999
290	012092	Three-way valve VXG 48.20 3/4" for FireWIN, VarioWIN	0	200501999
300	002453	Compression spring 1DXDA10, 3X20X6,5 female thread IG WST.1.4310 for FireWIN, VarioWIN	0	200501999
310	044202	Insert 3/4“ - No. 371 - flat-turned for FireWIN, VarioWIN	0	200501999
315	012633	Insert 372 1"-3/4" FW	0	200501999
317	000109	Screw-in part 3/4“ - No. 370 - black for VarioWIN, FireWIN	0	200501999
320	006010	Eccentric vibration BioWIN, FireWIN	0	200501999
325	012504	Ash compactor eccentric disc for FireWIN, VarioWIN	0	200501999
330	044607	Down chute for FireWIN, VarioWIN	0	200501999
335	020362	Fan disc M6	0	200501999
340	017094	WERL056 Flat brush 1 1/2" NO. 72753 for FireWIN, VarioWIN, BioWIN10-26, BioWIN XL 35-60	0	200501999
342	045615	Ash compactor flange for FireWIN, VarioWIN	0	200501999
345	031243	Auger motor flange seal (S400-003) for FireWIN, VarioWIN	0	200501999
350	051479	Sensor pipe flange FireWIN, VarioWIN	0	200501999
360	044489	Blower flange for FireWIN, VarioWIN	0	200501999
365	045986	Auger motor flange plate for FireWIN from batch 6, VarioWIN	0	200501999
370	044372	Auger flange for FireWIN, VarioWIN	0	200501999
380	044487	Rotary feeder flange for FireWIN, VarioWIN	0	200501999
390	019415	Wing nut DIN 315 - M8 - brass for FAX, FireWIN, VarioWIN, BioWIN 10, EasyWIN Premium 180	0	200501999
393	045614	Ash compactor guide plate for FireWIN, VarioWIN	0	200501999
395	012501	Fork head M8xL1 16mm / L2 32mm for FireWIN, VarioWIN	0	200501999
400	012600	Gas spring 4534DS 0100 N	0	200501999
410	040875	Blower wheel Ø140 for PMX 15, BioWIN10/15, FireWIN to batch 9, VarioWIN	0	200501999
415	033112	Setscrew M8x10 DIN916	0	200501999
420	044910	Rear glass cover for FireWIN	0	200501999
430	004665	Glass panel heating door 315x246x5 for FireWIN	0	200501999
440	004928	Glass fibre cord 5/5mm for FireWIN, ZHN, VestoWIN Premium 200-202	0	200501999
450	004652	Glass panel cladding door GEB.AT 311X266 for FireWIN	0	200501999
460	053851	de: Zündelement inkl. Kabel beigelegt.	0	200501999
460	055201	Ignition element BioWIN10-26, FireWIN from lot 15, VarioWIN from lot 15 BioWIN XL, LWK	0	200501999
460	055202	Modifications set ignition	0	200501999
470	001438	Semicircular ring for corrugated tube 3/4“ for FireWIN, NBE, HMX, VarioWIN	0	200501999
475	002050	Power supply unit 002049 holding plate for VarioWIN, FireWIN, BioWIN 10-26, BioWIN XL 35-60, LogWIN Premium 180-505	0	200501999
480	044697	Glow ignition holding bracket FireWIN	0	200501999
490	004870	EKX901 Manually operated bleeder 1/2" with slotted screw for AccuWIN, AccuWIN Solar, VarioWIN, FireWIN	0	200501999
495	001058	ASL001 Manually operated bleeder VFR 1/4“ for OE/KN/M,GKX,ASN,ASL,OEX, MIRA, fittings cabinet Vesto 200, VarioWIN, FireWIN	0	200501999
497	045613	Coasting surface lever for NHF for ash compactor for FireWIN, VestoWIN, VarioWIN	0	200501999
500	044894	Heating door complete for FireWIN	0	200501999

Item no.	Article no.	Description	Serialnumber from	Serialnumber
510	025967	Cap nut DIN 1587 - M8 - 6 - galvanised for FAX, FireWIN, VarioWIN, BioWIN 10-26, EasyWIN Klassik/Premium 180	0	200501999
512	017049	Cylinder-head screw, hexagon socket ISO 4762 - M8x70 - 8.8 - galva. (DIN 912) for VarioWIN, FireWIN, BioWIN XL 35-60	0	200501999
515	020117	Cylinder-head screw, hexagon socket ISO 4762 - M12x25 - 8.8 - galva. (DIN 912) for VarioWIN, FireWIN, BioWIN10-26, LogWIN Premium	0	200501999
518	051541	Modification set BUML TTL to BUML TTL 2Z	0	200501999
520	006723	InfoWIN angled	0	200501999
530	044729	Cable for ash compactor motor X7 for FireWIN, VarioWIN	0	200501999
540	044722	Cable for combustion chamber door X15 for FireWIN, VarioWIN	0	200501999
545	053643	Cable - ignition element for BW1, BW2, FireWIN and VarioWIN	0	200501999
550	000395	Three-way valve cable for FireWIN,GMX,MIRA,GENIO/MultiWIN,VarioWIN	0	200501999
552	045066	Differential pressure watchdog cable X10 for FireWIN	0	200501999
556	045575	Power supply cable complete for FireWINF	0	200501999
557	002051	Power supply unit cable FRIWO (primary power line) for VarioWIN, FireWIN, BioWIN 10-26, BioWIN XL 35-60, LogWIN Premium 180-505	0	200501999
559	046045	Ribbon cable set	0	200501999
560	044730	Cable for shaker motor limit X14 switch for FireWIN, VarioWIN	0	200501999
570	044727	Cable for shaker motor X5 for FireWIN, VarioWIN	0	200501999
575	045095	Cable set REG for FireWIN	0	200501999
580	044728	Cable for ignition element X6 for FireWIN, VarioWIN	0	200501999
585	004385	KFE cock	0	200501999
590	007330	Condenser for motor MAB 500V, 3µF for HMX,PMX,SWK,BioWIN10-26,FireWIN,VarioWIN,BioWIN XL 35-60, EasyWIN Premium 180,LogWIN Premiu	0	200501999
600	007332	Condenser 4µF for auger motor for PMX150,BioWIN10/15,FireWIN,VarioWIN, BioWIN XL 35-60	0	200501999
610	044785	Bracket for external combustion intake air for FireWIN	0	200501999
615	045761	BUML interface bracket for FireWIN, VarioWIN	0	200501999
620	041734	Shaker motor bracket BioWIN 10-26	0	200501999
625	044172	Rocker switch bracket for FireWIN, VarioWIN	0	200501999
630	006711	Cone BioWIN 10/15 to lot 29, FireWIN to lot 9	0	200501999
650	044619	Heating surface cleaning crank for FireWIN, VarioWIN	0	200501999
655	045619	Ash compactor bearing arm for FireWIN, VarioWIN	0	200501999
660	005111	Heating surface cleaning bearing block for FireWIN, VestoWIN Klassik 170-220, VarioWIN, VestoWIN Premium 200-202	0	200501999
661	007125	Bearing for vibrating drive	0	200501999
662	002296	Long nipple 3/4“x60 mm, brass for VarioWIN, FireWIN	0	200501999
665	044858	Ventilation ribs platinum silver 059/90551 ga. for FireWIN	0	200501999
665	044869	Ventilation ribs granite tiger 089/71480 ga. for FireWIN	0	200501999
665	044878	Ventilation ribs pearl white Tiger 089/10990 ga. for FireWIN	0	200501999
670	005025	Power relay OMRON G7L-2A-BUB 200/240AC for PMX,BioWIN XL, BioWIN10-26,FireWIN,VarioWIN, BioWIN XL 35-60	0	200501999
680	001759	Magnetic lock No. 246.41 for GKW,NBE,GKX,GWX,GTX,PMX,HMX,FireWIN,VarioWIN, BioWIN 10-26	0	200501999
690	009540	Spatula	0	200501999
700	001066	ASL002 Pressure gauge TYP101 Ø50 for OEX,OE/KN/M,GKW,ASN,ASL,GKX,GKA/E,MIRA,FireWIN,VarioWIN,fittings cabinet Vesto 200	0	200501999
705	020035	Measuring hole plug for BioWIN 10-26	0	200501999
710	009277	Air control microswitch	0	200501999
715	005141	Microswitch Z-15GW4-B for heating door for FAX,HMX,PMX, SilvaWIN, FireWIN	0	200501999
720	044572	Module connection PCB for FireWIN, VarioWIN	0	200501999
730	041036	Module guide complete for FireWIN, VarioWIN	0	200501999
732	045630	Mounting plate for steel pipes for FireWIN	0	200501999
733	007106	Gearmotor with connection cable, type: FGA 53 / 4DEKG 56 # for VarioWIN, FireWIN from batch 6, BioWIN XL 35-60	0	200501999
735	046972	Ash compaction motor, coasting surface cleaning for FireWIN, VarioWIN	0	200501999
740	000212	de: Motor Dreiwegeventil (200-240VAC) VC4012 mit Molexanschluß	0	200501999
750	044158	Blower motor with cable for blower for SilvaWIN, LogWIN, FireWIN, BioWIN XL 35-60, EasyWIN Premium 180, LogWIN Premium 180-505	0	200501999
760	044943	Vibrating motor FireWIN	0	200501999
770	045907	Modification package for FireWIN motor - consists of: Parts of the modification package no. 046203 and motor no.007106	0	200501999
773	016551	Hexagon nut M3 DIN 934	0	200501999
775	031156	Hexagon nut M10 DIN 439	0	200501999

Item no.	Article no.	Description	Serialnumber from	Serialnumber
780	033097	Nut (low) DIN 439 - B M12 - 04 - galvanised	0	200501999
782	016624	Nut DIN 934 - M12 - 8 - galvanised for VarioWIN, FireWIN, EasyWIN Klassik/Premium 180, LogWIN Premium 180-505	0	200501999
785	016594	Hexagon nut M6 DIN 934	0	200501999
790	015992	Nut M8 DIN 934 V2 - LogWIN Klassik pellet ready	0	200501999
800	006821	Proximity switch, capacitive	0	200501999
805	009342	Proximity switch, inductive M8x1 for VarioWIN, FireWIN, BioWIN 10-26	0	200501999
810	006832	Proximity switch M12, inductive	0	200501999
815	041430	Mains connection socket 3-pin for MIRA,ETX,PMX,BioWIN10-26,LogWIN Premium 180-505,EasyWIN Premium 180,BioWIN XL 35-60, FireWIN	0	200501999
820	051645	Power supply unit 12V	0	200501999
825	045611	Ash compactor coasting surface plate, rear for FireWIN, VarioWIN	0	200501999
826	045612	Ash compactor coasting surface plate, front for FireWIN, VarioWIN	0	200501999
828	005646	WAX888 Plastic rivet PL-NI 12568 SW for WAX/LAX, MIRA, FireWIN	0	200501999
830	006849	O-ring FPM70 45 x 4	0	200501999
835	017048	Shoulder screw M8 10x25 ISO 7379	0	200501999
840	006766	Feather key, without tightening DIN6885 A 6x6x28 mm for PMX, BioWIN10-26, FireWIN, VarioWIN, BioWIN XL 35-60	0	200501999
845	007609	PCB holder	0	200501999
850	006713	FMF board FireWIN	0	200501999
860	047774	Primary air pin for BioWIN10-26 FireWIN bis Los9 und PMX 21-26	0	200501999
870	006399	HUPA pump 15-4.0 U130mm for AccuWIN, AccuWIN Solar, VarioWIN, FireWIN	0	200501999
871	006419	Pump HEP 15-4.0 E 130 mm - Energy savings pump for FireWIN, VarioWIN	0	200501999
872	012139	Pump screw connection DN3/4“-1“ - brass for FireWIN, VarioWIN	0	200501999
875	044494	Cleaning cover FireWIN	0	200501999
880	044912	Clearer flat, complete for FireWIN, VarioWIN	0	200501999
885	045025	Reduction nipple 3/8“-3/4“, turned for FireWIN, VarioWIN	0	200501999
887	043803	Cone lifter BioWIN 10/15 to lot 29, FireWIN to lot 9	0	200501999
890	044694	Grate plate, top FireWIN to lot 9	0	200501999
895	044205	Return complete for FireWIN, VarioWIN	0	200501999
896	044201	Return pipe for FireWIN, VarioWIN	0	200501999
897	012140	Gravity brake SBM 3/4“ G1 IG/AG for VarioWIN	0	200501999
900	044693	Shaker lever FireWIN	0	200501999
910	042536	Shaker lever 1 PMX 21/26, BioWIN 10-26, FireWIN	0	200501999
920	044529	Shaker lever linkage	0	200501999
930	007049	Hinge “Stabilo 72”, vn for FireWIN	0	200501999
940	031251	Sound insulation 190 x 180 x 20 material: S200 for FireWIN	0	200501999
950	044612	Daily use container auger for FireWIN, VarioWIN	0	200501999
960	044896	Auger tube with friction bearing for daily use container, cpl., mounted for FireWIN, VarioWIN	0	200501999
970	045076	Screw M6 (with U-washer and nut) for heating surface cleaning complete for PMX, BioWIN10-26, FireWIN, VarioWIN	0	200501999
980	009219	Screw door handle bearing M12 (WAF17/30) - galvanised for HMX, BioWIN10-26, FireWIN, VarioWIN, EasyWIN Klassik/Premium 180	0	200501999
983	045223	Inner driving rod for BioWIN 10-26 from batch 30, VarioWIN, FireWIN	0	200501999
985	045232	Driving rod, complete for BioWIN10-26 à partir de lot 30 , FireWIn à partir de lot 10, VarioWIN	0	200501999
990	041498	Protective tube for exhaust gas sensor	0	200501999
993	045617	Swivel shaft complete, ash compactor for FireWIN, VarioWIN	0	200501999
994	016756	Hexagon screw M5x10 DIN 933	0	200501999
995	031545	Hexagon screw M5x12 DIN 7500 (not ilustrated)	0	200501999
998	017873	Hexagon screw DIN 933 - M8x20 - A2 for VarioWIN, FireWIN	0	200501999
1000	015059	Hexagon screw DIN 933 - M5x35 - 8.8 - galvanised for VarioWIN, FireWIN	0	200501999
1010	015026	Hexagon screw DIN 933 - M6x10 - 8.8 - galvanised for VarioWIN, FireWIN	0	200501999
1020	015041	Hexagon screw DIN 933 - M6x25 - 8.8 - galvanised for VarioWIN, FireWIN	0	200501999
1025	017051	Hexagon screw M6x12 DIN 933 (not illustrated)	0	200501999
1030	017020	Hexagon screw Niro DIN 933 - M5x12 - A2 for HMX, FireWIN, VarioWIN	0	200501999
1035	017086	Hexagon screw M8x20 DIN 933 (not illustrated)	0	200501999

Item no.	Article no.	Description	Serialnumber from	Serialnumber t
1040	027391	Hexagon pin screwdriver 10 mm DIN 911	0	200501999
1050	044854	Rear left side panel titanium Tiger 029/40782 be. for FireWIN	0	200501999
1050	044864	Rear left side panel garnet RAL 3011 tigre 089/30196 be. for FireWIN	0	200501999
1050	044867	Rear left side panel granite RAL 7016 tigre 089/71480 be. for FireWIN	0	200501999
1050	044876	Rear left side panel pearl white RAL 1013 tigre 089/10990 be. for FireWIN	0	200501999
1060	044852	Rear left side panel platinum silver Tiger 059/90551 be. for FireWIN	0	200501999
1060	044874	Rear left side panel quartz beige RAL1001 Tiger 089/15420 be. for FireWIN	0	200501999
1070	044853	Rear right side panel titanium 029/40782 for FireWIN	0	200501999
1070	044863	Rear right side panel garnet RAL3011 089/30196 for FireWIN	0	200501999
1070	044866	Rear right side panel granite RAL7016 089/71480 be. for FireWIN	0	200501999
1070	044875	Rear right side panel pearl white Tiger RAL1013 089/10990 be. for FireWIN	0	200501999
1080	046197	Rear right side panel platinum silver for FireWIN	0	200501999
1080	046198	Rear right side panel quartz beige for FireWIN	0	200501999
1090	017222	Countersinking screw DIN 965 - M3x12 - galvanised with cross slot for VarioWIN, FireWIN, EasyWIN Klassik/Premium 180	0	200501999
1095	016863	Countersinking screw M6x16	0	200501999
1097	017223	Countersinking screw DIN 965 - M4x70 - galvanised with cross slot for VarioWIN, FireWIN	0	200501999
1100	001031	ASL004 Safety valve 1/2“ 2.5 bar for GWX,OEX,OE/KN/M,ASL,GKW,GTX,ASN,GKA/E,MIRA,FireWIN,Vesto Art.Nr.:49292, VarioWIN, fittings ca	0	200501999
1110	003228	6.3A fuse (not illustrated)	0	200501999
1120	003663	Fuse holder	0	200501999
1130	016022	Silicone hose 5 x 8mm for FireWIN	0	200501999
1140	016025	Silicone hose PU1, diameter 25x320, secondary air, independent of room air for FireWIN, VarioWIN	0	200501999
1150	016026	Silicone hose SG1M, diameter 32x330, primary air, independent of room air for FireWIN, VarioWIN	0	200501999
1155	045028	Cover clamping plate for FireWIN, VarioWIN	0	200501999
1160	018184	Clamping pin DIN 1481 - Ø 5x14 for VarioWIN	0	200501999
1170	010286	ASL0021 Shut-off valve 1/4“ internal for pressure gauge R1/2“ for ASL/M,ÖR,SH,OEM,OEN,GTX,ASN,OEX,MIRA,FireWIN,fittings cabinet Ve	0	200501999
1175	045405	de: Spule 0,5mH mit Klemmleisten f.XB=Motor Förderschnecke u. X4=Rechtslauf u. X24=Linkslauf vorm.	0	200501999
1180	005010	Steel collar 3/4“x50, black for VarioWIN, FireWIN	0	200501999
1185	070323	Plug, 3-pin, black	0	200501999
1190	070162	Plug, 4-pin, black for auger motor for VarioWIN, FireWIN	0	200501999
1200	070374	Plug, 7-pin (3-pin black, 4-pin brown) for blower motor for FireWIN, VarioWIN	0	200501999
1210	012240	Positioning drive SSY319 (230V, 50 Hz, 150s) for VarioWIN, FireWIN	0	200501999
1220	009992	Leg - JTB30 - M10x60 with slot for OEX, NBA, MIRA, VarioWIN, FireWIN	0	200501999
1230	044613	Spur gear Z=32; m=2.5 for FireWIN from batch 6, VarioWIN - For units up to batch 5 009465 and 044612 must be replaced! -	0	200501999
1235	047115	Spur gear Z=28; m=1.5, for shake-out drive for FireWIN from batch 10, BioWIN 10/15 from batch 30, VarioWIN	0	200501999
1240	044778	Jet protection plate, complete for FireWIN, VarioWIN	0	200501999
1245	000353	KSN091 WAF Plug 1/2“ - no. 290 1- black No. 49304 for KSN, OEK, VestoWIN Klassik 170-220, FireWIN, VarioWIN	0	200501999
1247	012042	Plug 1/2“ MS, self-sealing, brass VER923 for VarioWIN, FireWIN	0	200501999
1250	502186	MES009M Immersion sensor	0	200501999
1260	006820	MES007 Immersion sensor (exhaust gas sensor) Pt 1000 for PMX, FireWIN, VarioWIN, BioWIN 10-26, BioWIN XL 35-60	0	200501999
1270	005452	OK-915 Immersion sleeve (129 mm) No.55501.04 for EKX,OK/E,GWX,KSN,ZHN,OK-915,ETX,SNX,FKX,MIRA,FireWIN,VestoWIN Klassik 170-220,	0	200501999
1280	007626	Thermocouple	0	200501999
1290	005672	Thermostat LS1+100-6U	0	200501999
1295	045623	Ash pan partition plate for FireWIN, VarioWIN	0	200501999
1300	009549	Heating door handle rod for FireWIN, VarioWIN	0	200501999
1310	009553	Ash door handle rod for FireWIN, VarioWIN	0	200501999
1320	044588	Door locking bar for FireWIN, VarioWIN	0	200501999
1330	044591	Door locking latch for FireWIN, VarioWIN	0	200501999
1335	000092	T-piece 3/4“ - no. 130 - black for VarioWIN, FireWIN	0	200501999
1340	012548	Union nut no. 374 1"	0	200501999
1350	000566	NBE964 Union nut 1/2” black no. 374 for NBE, HMX, FireWIN	0	200501999
1355	045907	Modification package for FireWIN motor - consists of: Parts of the modification package no. 046203 and motor no.007106	0	200501999

Item no.	Article no.	Description	Serialnumber from	Serialnumber
1360	006721	Baffle plate for FireWIN, VarioWIN	0	200501999
1370	046057	U-section silicone 6x7 5x500mm FireWIN	0	200501999
1380	006012	Silicone U-section, approx. 7x8.5 mm for VarioWIN, FireWIN, BioWIN 10-26	0	200501999
1390	020397	Washer M6, DIN125, polyamide, 6.6 for BioWIN 10-26,BioWIN XL 35-60	0	200501999
1400	020540	U-Washer DIN 134 - M6 - galvanised for VarioWIN, FireWIN	0	200501999
1410	031755	Disc 8 ISO 7093	0	200501999
1412	024780	Disc 10 ISO7089	0	200501999
1413	018058	U-washer	0	200501999
1415	017183	U-Washer DIN 125B - M12 - galvanised for VarioWIN, FireWIN, BioWIN XL 35-60	0	200501999
1420	012103	Return flow temperature increase valve 60 °C for FireWIN	0	200501999
1430	000446	Valve insert for three-way valve 3/4“ from the VC-Serie, VCZZ6000B for VarioWIN, FireWIN	0	200501999
1440	044782	Connecting piece HFR, coasting surface cleaning for FireWIN, VarioWIN	0	200501999
1445	045610	Compactor plate, ash compaction for FireWIN, VarioWIN	0	200501999
1450	044897	Cladding door complete granite for FireWIN	0	200501999
1450	044898	Cladding door complete titanium for FireWIN	0	200501999
1450	044899	Cladding door complete garnet for FireWIN	0	200501999
1450	044900	Cladding door complete pearl white for FireWIN	0	200501999
1460	007528	de: Verschraubung 3/4" für Pumpe FireWIN	0	200501999
1461	001306	Screw connection male thread D 1402, 3/4“x18 mm AG18 for FireWIN, VarioWIN	0	200501999
1462	007055	Flow pipe for FireWIN, VarioWIN	0	200501999
1464	045023	Hot water tank flow pipe 3/4“x118.5 mm - black for FireWIN, VarioWIN	0	200501999
1470	009966	Wago terminal block 261; 11-pin orange extra-low voltage Extnd. for VarioWIN, FireWIN, BioWIN XL 35-60	0	200501999
1480	009968	Wago terminal block 261; 13-pin orange extra-low voltage (no. 1-13), for VarioWIN, FireWIN, BioWIN 10-26, BioWIN XL 35-60 (*not il	0	200501999
1490	006833	Wago terminal block 261; 4-pin "12V GND"	0	200501999
1500	009948	Wago terminal block 261; 2-pin WMS 1-2, 3-piece for VarioWIN, FireWIN	0	200501999
1510	006834	Wago terminal block 261; 4-pin "safety 1-4"	0	200501999
1520	009960	Wago terminal block 261; 8-pin 230V extnd. for VarioWIN, FireWIN, BioWIN10-26, BioWIN XL 35-60 (*not illustrated)	0	200501999
1530	009891	Wago terminal block 261; 11-pin safety 1-11 for FireWIN, VarioWIN	0	200501999
1540	503367	FIRE023 Heat shield-cover for front window to reduce heat radiation during summer operation for FireWIN	0	200501999
1550	006217	Corrugated tube stainless steel DN16 x 320 with 3/4” union nuts + seals for FireWIN	0	200501999
1560	006218	Corrugated tube stainless steel DN16 x 500 with 3/4” union nuts + seals for FireWIN	0	200501999
1570	006213	Stainless steel corrugated tube, DN16x600 mm, 2 union nuts 3/4“, seals for VarioWIN, FireWIN	0	200501999
1580	000140	Stainless steel corrugated tube, DN16x680 mm, 2 union nuts 3/4“, seals for VarioWIN, FireWIN	0	200501999
1590	006298	Flexible stainless steel tube 3/4"x150mm	0	200501999
1593	045216	Limit switch bracket for BioWIN 10-26 from batch 30, VarioWIN, FireWIN	0	200501999
1595	044198	Pipe for mixer group 3/4“x81.5 mm - black for FireWIN, VarioWIN	0	200501999
1598	005563	Rocker switch SW/GR 0-1	0	200501999
1600	044614	Toothed washer for FireWIN, BioWIN XL 35-60, VarioWIN	0	200501999
1610	009465	Rotary feeder for FireWIN from batch 6, VarioWIN	0	200501999
1620	002444	Tension spring 9,8x8,7 DAx98x39IF 1.4310 WAX/LAX,FW WAX976	0	200501999
1630	016769	Cyl. screw M3 x 20 galvanized DIN 7985 A for FireWIN	0	200501999
1631	016780	Cylinder screw M4x12 DIN 7985	0	200501999
1632	018139	Cylinder screw 4.2x13 DIN7981SP (not illustrated)	0	200501999
1633	016950	Cyl. screw M5x12, galvanised, with cross slot, ISO 7045 (DIN 7985) for VarioWIN, FireWIN	0	200501999
1635	017884	Cylinder screw M5x12 TT, DIN 7500C for VestoWIN Premium 200-202	0	200501999
1640	009567	Cylindrical button 519-28-M10 for FireWIN, VarioWIN	0	200501999

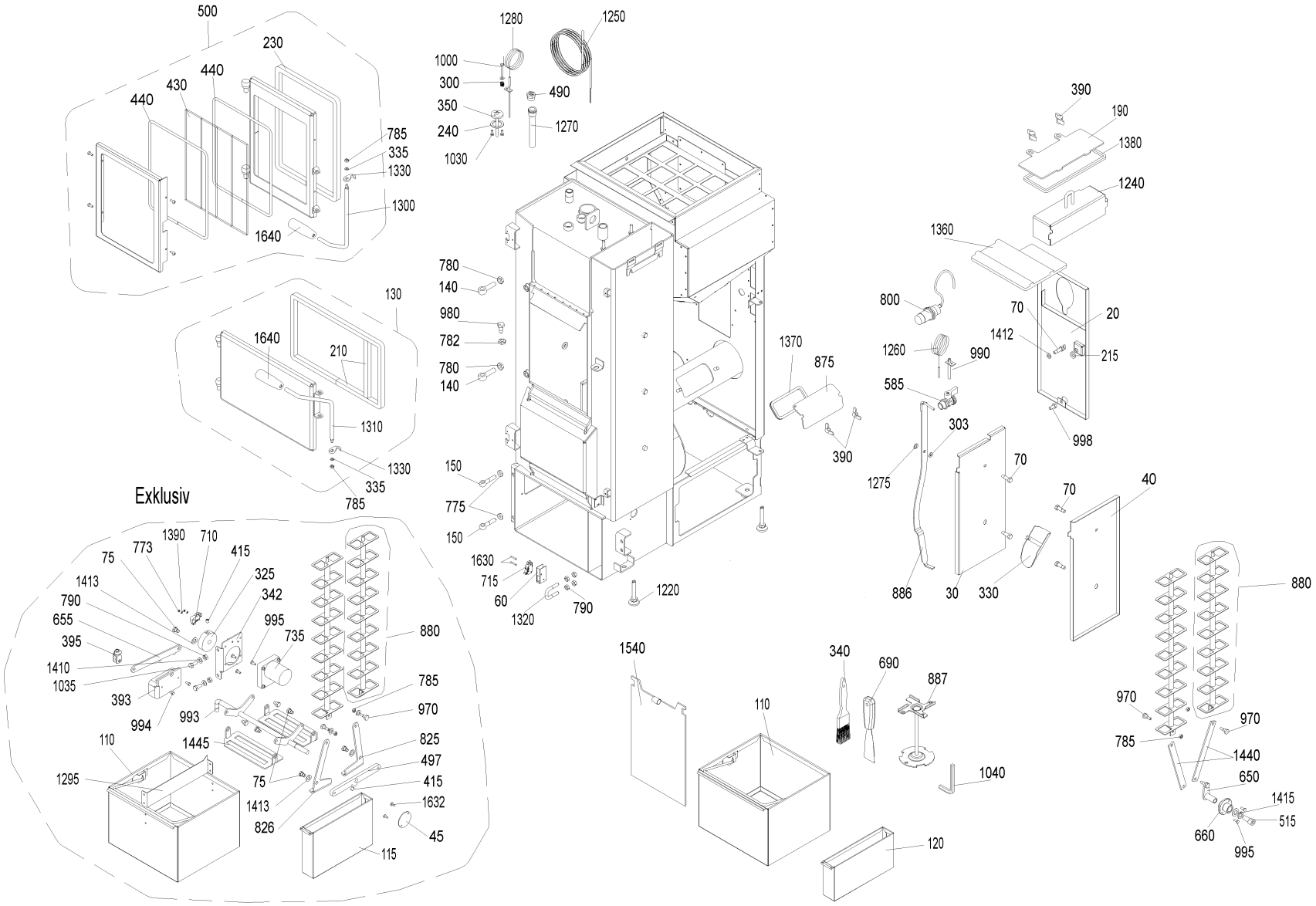
500
230
440
430
440
785
335
1330
1300
1640
130
1640
210
1310
1330
335
785
Exklusiv
1390
710
773
75
415
325
1413
342
790
995
655
735
395
880
1410
785
1035
970
393
994
993
825
110
1445
497
1295
75
415
1413
1632
826
45
115
1280
1250
1000
300
490
350
240
1270
1030
780
140
980
782
780
140
150
775
150
1630
715
60
1320
790
1220
1370
875
390
390
190
1380
1240
1360
800
70
20
1412
1260
990
215
585
998
303
1275
70
886
30
330
70
40
880
970
785
970
1440
650
1415
515
660
995
1540
110
340
690
887
1040
120

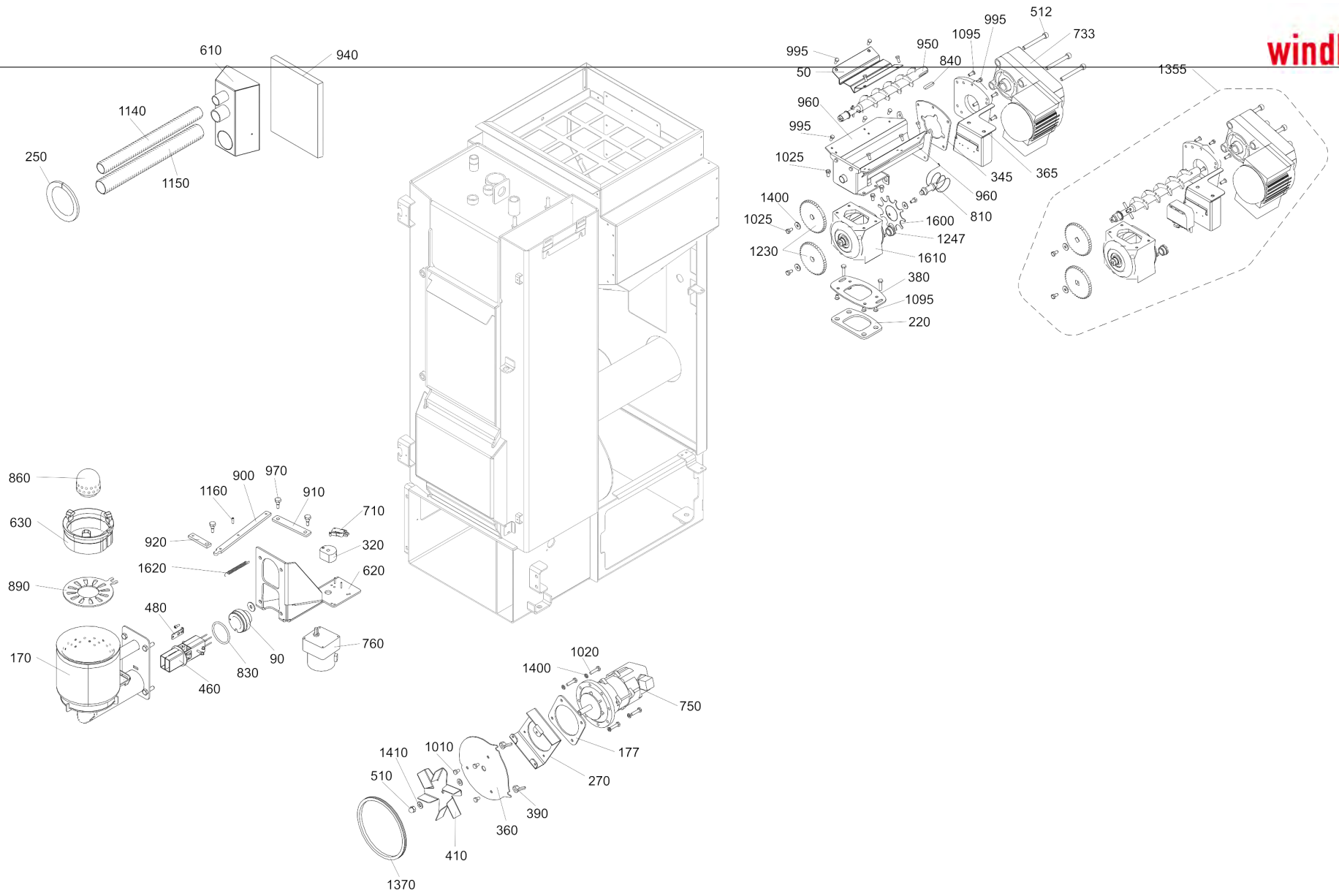
610
940
1140
250
1150
995
50
950
840
995
1095
512
733
960
995
1025
345
365
1355
1400
1025
1600
1247
1230
1610
960
810
380
1095
220
860
630
890
900
970
1160
910
710
920
320
1620
620
480
760
170
460
830
90
1020
1400
750
177
270
1410
1010
510
390
360
410
1370

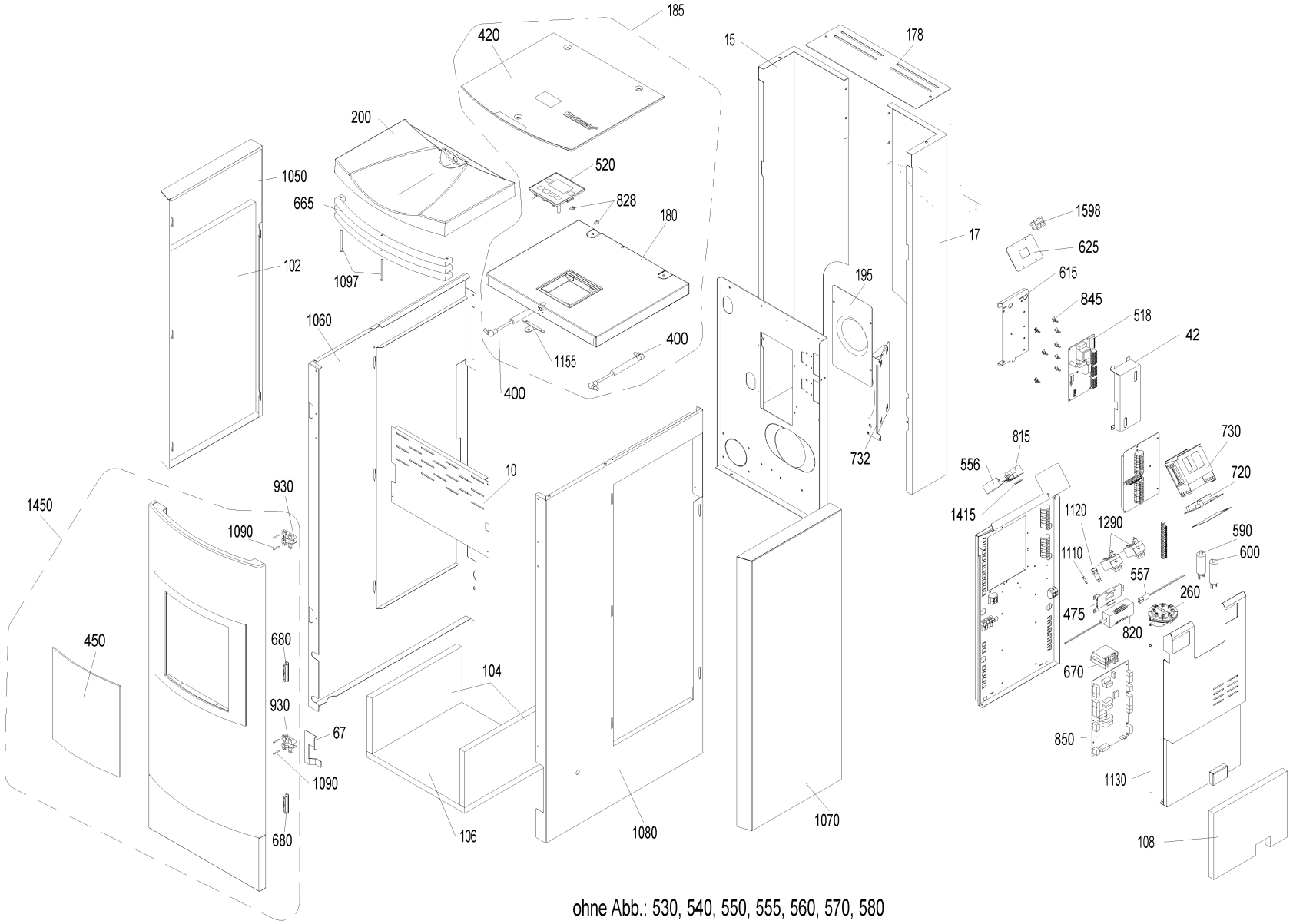

ohne Abb.: 530, 540, 550, 555, 560, 570, 580

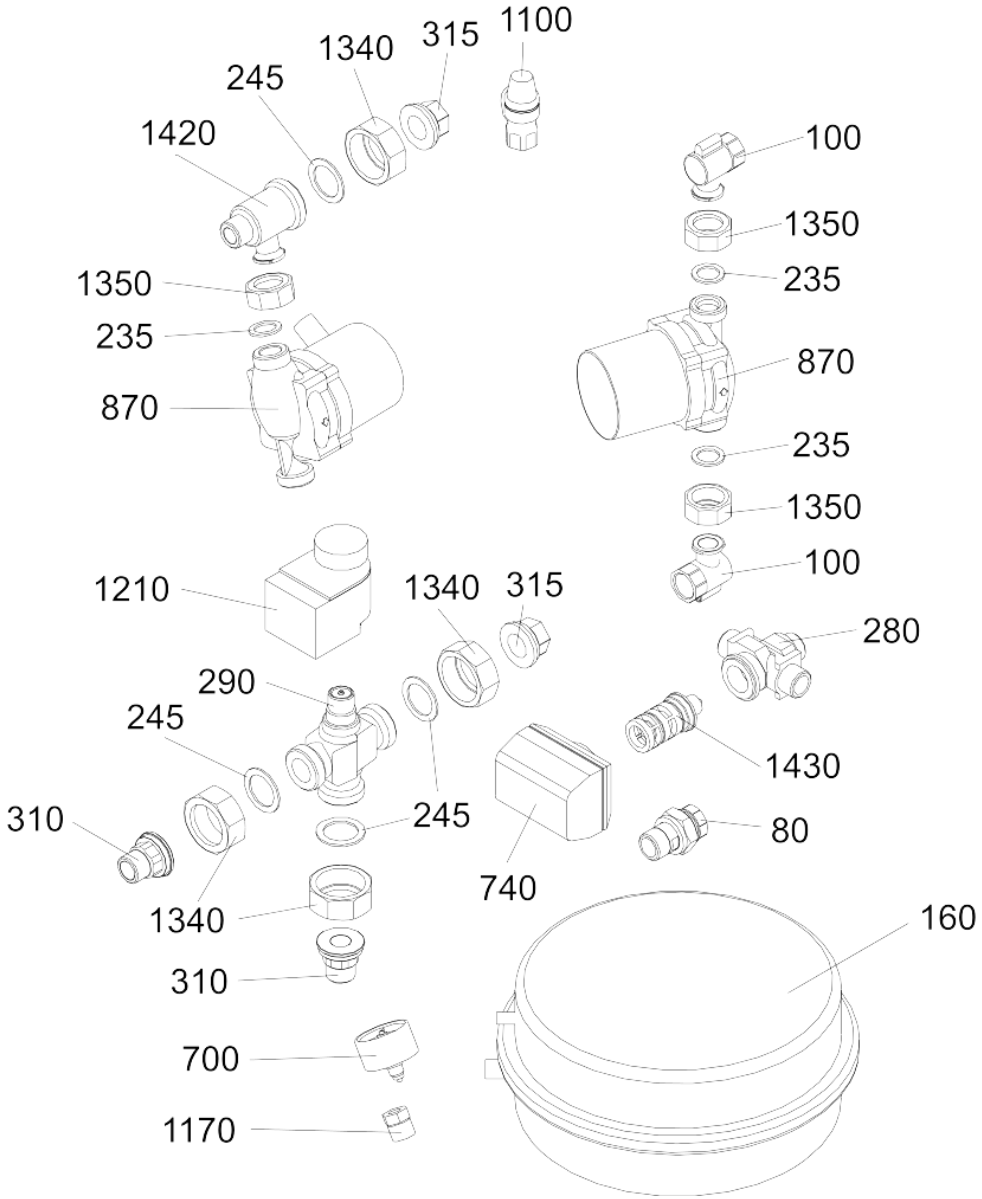
1100
315
1340
245
1420
100
1350
235
870
1350
235
870
235
1350
100
280
1210
1340
315
290
245
1430
245
310
80
740
1340
160
310
700
1170

Item no.	Article no.	Description	Serialnumber from	Serialnumber t
10	044581	Front cover plate for FireWIN	0	200501999
15	045631	Left cover platinum silver for FireWIN	0	200501999
15	045757	Left cover quartz beige for FireWIN	0	200501999
17	045633	Right cover plate platinum silver for FireWIN	0	200501999
17	045758	Right cover plate quartz beige for FireWIN	0	200501999
20	044861	Rear cover plate FireWIN	0	200501999
30	044626	Left cover for VarioWIN, FireWIN	0	200501999
40	044368	Right cover for VarioWIN, FireWIN	0	200501999
42	051690	Cover BUML incl. Sticker	0	200501999
45	044518	Base cover for VarioWIN, FireWIN	0	200501999
50	044376	Auger cover for VarioWIN, FireWIN	0	200501999
60	044526	Cover door safety switch for FireWIN	0	200501999
65	016397	Drainage line 18x1 for FireWIN	0	200501999
67	045037	Adapter plate door switch - Only for batch 1 ! - for FireWIN	0	200501999
70	013804	Collar screw M8x27 for VarioWIN, FireWIN	0	200501999
75	012502	Collar screw	0	200501999
80	012091	Connection coupling 3/4“ with Aqua-Stop for male thread for VarioWIN, FireWIN	0	200501999
90	007647	Connection piece, primary air for VarioWIN, FireWIN	0	200501999
100	012063	Connection bracket 1“-3/4“ for VarioWIN, FireWIN	0	200501999
101	502869	FIRE090 Fresh air flap control for FireWIN, VarioWIN	0	200501999
102	031248	Absorption mat 715 x 351 x 20 material: S490-020 for FireWIN	0	200501999
104	031247	Absorption mat 354 x 190 x 20 material: S490-020 for FireWIN	0	200501999
106	031246	Absorption mat 385 x 354 x 20 material: S280-020 for FireWIN	0	200501999
108	031245	Absorption mat for control panel 290 x 226 material: S490-020 for FireWIN	0	200501999
110	046233	Ash pan for FireWIN/VarioWIN - classic/premium/exclusive	0	200501999
115	045622	Coasting surface ash pan, exclusive for VarioWIN, FireWIN	0	200501999
120	503366	Coasting surface ash pan, Classic/ Premium for VarioWIN, FireWIN	0	200501999
130	044895	Ash door, complete for VarioWIN, FireWIN	0	200501999
135	045919	Driving rod seating bracket for VarioWIN, BioWIN 10-26 from batch 30, FireWIN	0	200501999
140	033432	Eyebolt similar to DIN 444 - B M10x50 - 4.6 - bright for VarioWIN, FireWIN, VestoWIN Premium 200-202, VestoWIN Klassik 170-220	0	200501999
150	033433	Eyebolt similar to DIN 444 - B M12x50 - 4.6 - bright for VarioWIN, FireWIN,EasyWIN Klassik/Premium 180,LogWIN Premium 180-505	0	200501999
160	003610	Expansion tank DXM 12 G3/8“ for FireWIN, VarioWIN	0	200501999
165	012538	Cover Ø17 for FireWIn from batch 10	0	200501999
170	044700	Burner FireWIN	0	200501999
172	002519	Long bend - 1/2“ - No. 3 - black for VarioWIN, FireWIN, GKX	0	200501999
175	070324	Socket, 3-pin, black	0	200501999
177	031244	Blower motor damping mat material: S400-003 for FireWIN, VarioWIN	0	200501999
178	045759	Top cover plate platinum silver for FireWIN	0	200501999
178	045760	Top cover plate quartz beige for FireWIN	0	200501999
180	044906	Rear cover complete granite for VarioWIN	0	200501999
180	044907	Rear cover complete titanium for FireWIN	0	200501999
180	044908	Rear cover complete garnet for FireWIN	0	200501999
180	044909	Rear cover complete pearl white for FireWIN	0	200501999
185	044890	FIRE74 Rear cover mounted granite for reservoir for FireWIN	0	200501999
185	044891	FIRE78 Rear cover mounted garnet for reservoir for FireWIN	0	200501999
185	044892	FIRE80 Rear cover mounted pearl white for reservoir for FireWIN	0	200501999
185	044929	FIRE76 Rear cover mounted titanium for reservoir for FireWIN	0	200501999
190	044477	heating surface cover for FireWIN, VarioWIN	0	200501999
195	044516	Rear wall cover for FireWIN, VarioWIN	0	200501999
200	044901	Front cover complete granite for FireWIN	0	200501999
200	044902	Front cover complete titanium for FireWIN	0	200501999

Item no.	Article no.	Description	Serialnumber from	Serialnumber
200	044904	Front cover complete pearl white for FireWIN	0	200501999
200	044913	Front cover complete garnet for FireWIN	0	200501999
210	006840	Seal 16x15 mm	0	200501999
215	013426	Seal 20 x 10 x 3 KP1260/220 for FireWIN	0	200501999
220	031241	Downpipe seal 115.5x73.7x5 for FireWIN, VarioWIN	0	200501999
230	044586	Heating door seal for FireWIN	0	200501999
235	016152	ZH 094 Klingerit seal 1/2" (30x21x2mm) for AccuWIN, AccuWIN Solar, VarioWIN, FireWIN	0	200501999
240	003019	Seal flange combustion chamber sensor VarioWIN and FireWIN	0	200501999
240	016160	Klingerit seal 3/4“ (38x27x2 mm) for VarioWIN, FireWIN	0	200501999
245	016179	Gasket 1“ 44 x 3 x 2 mm for VarioWIN, FireWIN	0	200501999
250	044905	Seal section 461 0069 for FireWIN, VarioWIN	0	200501999
260	045404	Differential pressure watchdog	0	200501999
270	044490	Spacer plate for FireWIN, VarioWIN	0	200501999
280	000397	Three-way valve 3/4” male thread AG VCZMG6000E for FireWIN, MIRA, Xenta	0	200501999
290	012092	Three-way valve VXG 48.20 3/4" for FireWIN, VarioWIN	0	200501999
300	002453	Compression spring 1DXDA10, 3X20X6,5 female thread IG WST.1.4310 for FireWIN, VarioWIN	0	200501999
310	044202	Insert 3/4“ - No. 371 - flat-turned for FireWIN, VarioWIN	0	200501999
315	012633	Insert 372 1"-3/4" FW	0	200501999
317	000109	Screw-in part 3/4“ - No. 370 - black for VarioWIN, FireWIN	0	200501999
320	006010	Eccentric vibration BioWIN, FireWIN	0	200501999
325	012504	Ash compactor eccentric disc for FireWIN, VarioWIN	0	200501999
330	044607	Down chute for FireWIN, VarioWIN	0	200501999
335	020362	Fan disc M6	0	200501999
340	017094	WERL056 Flat brush 1 1/2" NO. 72753 for FireWIN, VarioWIN, BioWIN10-26, BioWIN XL 35-60	0	200501999
342	045615	Ash compactor flange for FireWIN, VarioWIN	0	200501999
345	031243	Auger motor flange seal (S400-003) for FireWIN, VarioWIN	0	200501999
350	051479	Sensor pipe flange FireWIN, VarioWIN	0	200501999
360	044489	Blower flange for FireWIN, VarioWIN	0	200501999
365	045986	Auger motor flange plate for FireWIN from batch 6, VarioWIN	0	200501999
370	044372	Auger flange for FireWIN, VarioWIN	0	200501999
380	044487	Rotary feeder flange for FireWIN, VarioWIN	0	200501999
390	019415	Wing nut DIN 315 - M8 - brass for FAX, FireWIN, VarioWIN, BioWIN 10, EasyWIN Premium 180	0	200501999
393	045614	Ash compactor guide plate for FireWIN, VarioWIN	0	200501999
395	012501	Fork head M8xL1 16mm / L2 32mm for FireWIN, VarioWIN	0	200501999
400	012600	Gas spring 4534DS 0100 N	0	200501999
410	040875	Blower wheel Ø140 for PMX 15, BioWIN10/15, FireWIN to batch 9, VarioWIN	0	200501999
415	033112	Setscrew M8x10 DIN916	0	200501999
420	044910	Rear glass cover for FireWIN	0	200501999
430	004665	Glass panel heating door 315x246x5 for FireWIN	0	200501999
440	004928	Glass fibre cord 5/5mm for FireWIN, ZHN, VestoWIN Premium 200-202	0	200501999
450	004652	Glass panel cladding door GEB.AT 311X266 for FireWIN	0	200501999
460	053851	de: Zündelement inkl. Kabel beigelegt.	0	200501999
460	055201	Ignition element BioWIN10-26, FireWIN from lot 15, VarioWIN from lot 15 BioWIN XL, LWK	0	200501999
460	055202	Modifications set ignition	0	200501999
470	001438	Semicircular ring for corrugated tube 3/4“ for FireWIN, NBE, HMX, VarioWIN	0	200501999
475	002050	Power supply unit 002049 holding plate for VarioWIN, FireWIN, BioWIN 10-26, BioWIN XL 35-60, LogWIN Premium 180-505	0	200501999
480	044697	Glow ignition holding bracket FireWIN	0	200501999
490	004870	EKX901 Manually operated bleeder 1/2" with slotted screw for AccuWIN, AccuWIN Solar, VarioWIN, FireWIN	0	200501999
495	001058	ASL001 Manually operated bleeder VFR 1/4“ for OE/KN/M,GKX,ASN,ASL,OEX, MIRA, fittings cabinet Vesto 200, VarioWIN, FireWIN	0	200501999
497	045613	Coasting surface lever for NHF for ash compactor for FireWIN, VestoWIN, VarioWIN	0	200501999
500	044894	Heating door complete for FireWIN	0	200501999

Item no.	Article no.	Description	Serialnumber from	Serialnumber t
510	025967	Cap nut DIN 1587 - M8 - 6 - galvanised for FAX, FireWIN, VarioWIN, BioWIN 10-26, EasyWIN Klassik/Premium 180	0	200501999
512	017049	Cylinder-head screw, hexagon socket ISO 4762 - M8x70 - 8.8 - galva. (DIN 912) for VarioWIN, FireWIN, BioWIN XL 35-60	0	200501999
515	020117	Cylinder-head screw, hexagon socket ISO 4762 - M12x25 - 8.8 - galva. (DIN 912) for VarioWIN, FireWIN, BioWIN10-26, LogWIN Premium	0	200501999
518	051541	Modification set BUML TTL to BUML TTL 2Z	0	200501999
520	006723	InfoWIN angled	0	200501999
530	044729	Cable for ash compactor motor X7 for FireWIN, VarioWIN	0	200501999
540	044722	Cable for combustion chamber door X15 for FireWIN, VarioWIN	0	200501999
545	053643	Cable - ignition element for BW1, BW2, FireWIN and VarioWIN	0	200501999
550	000395	Three-way valve cable for FireWIN,GMX,MIRA,GENIO/MultiWIN,VarioWIN	0	200501999
552	045066	Differential pressure watchdog cable X10 for FireWIN	0	200501999
556	045575	Power supply cable complete for FireWINF	0	200501999
557	002051	Power supply unit cable FRIWO (primary power line) for VarioWIN, FireWIN, BioWIN 10-26, BioWIN XL 35-60, LogWIN Premium 180-505	0	200501999
559	046045	Ribbon cable set	0	200501999
560	044730	Cable for shaker motor limit X14 switch for FireWIN, VarioWIN	0	200501999
570	044727	Cable for shaker motor X5 for FireWIN, VarioWIN	0	200501999
575	045095	Cable set REG for FireWIN	0	200501999
580	044728	Cable for ignition element X6 for FireWIN, VarioWIN	0	200501999
585	004385	KFE cock	0	200501999
590	007330	Condenser for motor MAB 500V, 3µF for HMX,PMX,SWK,BioWIN10-26,FireWIN,VarioWIN,BioWIN XL 35-60, EasyWIN Premium 180,LogWIN Premiu	0	200501999
600	007332	Condenser 4µF for auger motor for PMX150,BioWIN10/15,FireWIN,VarioWIN, BioWIN XL 35-60	0	200501999
610	044785	Bracket for external combustion intake air for FireWIN	0	200501999
615	045761	BUML interface bracket for FireWIN, VarioWIN	0	200501999
620	041734	Shaker motor bracket BioWIN 10-26	0	200501999
625	044172	Rocker switch bracket for FireWIN, VarioWIN	0	200501999
630	006711	Cone BioWIN 10/15 to lot 29, FireWIN to lot 9	0	200501999
650	044619	Heating surface cleaning crank for FireWIN, VarioWIN	0	200501999
655	045619	Ash compactor bearing arm for FireWIN, VarioWIN	0	200501999
660	005111	Heating surface cleaning bearing block for FireWIN, VestoWIN Klassik 170-220, VarioWIN, VestoWIN Premium 200-202	0	200501999
661	007125	Bearing for vibrating drive	0	200501999
662	002296	Long nipple 3/4“x60 mm, brass for VarioWIN, FireWIN	0	200501999
665	044858	Ventilation ribs platinum silver 059/90551 ga. for FireWIN	0	200501999
665	044869	Ventilation ribs granite tiger 089/71480 ga. for FireWIN	0	200501999
665	044878	Ventilation ribs pearl white Tiger 089/10990 ga. for FireWIN	0	200501999
670	005025	Power relay OMRON G7L-2A-BUB 200/240AC for PMX,BioWIN XL, BioWIN10-26,FireWIN,VarioWIN, BioWIN XL 35-60	0	200501999
680	001759	Magnetic lock No. 246.41 for GKW,NBE,GKX,GWX,GTX,PMX,HMX,FireWIN,VarioWIN, BioWIN 10-26	0	200501999
690	009540	Spatula	0	200501999
700	001066	ASL002 Pressure gauge TYP101 Ø50 for OEX,OE/KN/M,GKW,ASN,ASL,GKX,GKA/E,MIRA,FireWIN,VarioWIN,fittings cabinet Vesto 200	0	200501999
705	020035	Measuring hole plug for BioWIN 10-26	0	200501999
710	009277	Air control microswitch	0	200501999
715	005141	Microswitch Z-15GW4-B for heating door for FAX,HMX,PMX, SilvaWIN, FireWIN	0	200501999
720	044572	Module connection PCB for FireWIN, VarioWIN	0	200501999
730	041036	Module guide complete for FireWIN, VarioWIN	0	200501999
732	045630	Mounting plate for steel pipes for FireWIN	0	200501999
733	007106	Gearmotor with connection cable, type: FGA 53 / 4DEKG 56 # for VarioWIN, FireWIN from batch 6, BioWIN XL 35-60	0	200501999
735	046972	Ash compaction motor, coasting surface cleaning for FireWIN, VarioWIN	0	200501999
740	000212	de: Motor Dreiwegeventil (200-240VAC) VC4012 mit Molexanschluß	0	200501999
750	044158	Blower motor with cable for blower for SilvaWIN, LogWIN, FireWIN, BioWIN XL 35-60, EasyWIN Premium 180, LogWIN Premium 180-505	0	200501999
760	044943	Vibrating motor FireWIN	0	200501999
770	045907	Modification package for FireWIN motor - consists of: Parts of the modification package no. 046203 and motor no.007106	0	200501999
773	016551	Hexagon nut M3 DIN 934	0	200501999
775	031156	Hexagon nut M10 DIN 439	0	200501999

Item no.	Article no.	Description	Serialnumber from	Serialnumber t
780	033097	Nut (low) DIN 439 - B M12 - 04 - galvanised	0	200501999
782	016624	Nut DIN 934 - M12 - 8 - galvanised for VarioWIN, FireWIN, EasyWIN Klassik/Premium 180, LogWIN Premium 180-505	0	200501999
785	016594	Hexagon nut M6 DIN 934	0	200501999
790	015992	Nut M8 DIN 934 V2 - LogWIN Klassik pellet ready	0	200501999
800	006821	Proximity switch, capacitive	0	200501999
805	009342	Proximity switch, inductive M8x1 for VarioWIN, FireWIN, BioWIN 10-26	0	200501999
810	006832	Proximity switch M12, inductive	0	200501999
815	041430	Mains connection socket 3-pin for MIRA,ETX,PMX,BioWIN10-26,LogWIN Premium 180-505,EasyWIN Premium 180,BioWIN XL 35-60, FireWIN	0	200501999
820	051645	Power supply unit 12V	0	200501999
825	045611	Ash compactor coasting surface plate, rear for FireWIN, VarioWIN	0	200501999
826	045612	Ash compactor coasting surface plate, front for FireWIN, VarioWIN	0	200501999
828	005646	WAX888 Plastic rivet PL-NI 12568 SW for WAX/LAX, MIRA, FireWIN	0	200501999
830	006849	O-ring FPM70 45 x 4	0	200501999
835	017048	Shoulder screw M8 10x25 ISO 7379	0	200501999
840	006766	Feather key, without tightening DIN6885 A 6x6x28 mm for PMX, BioWIN10-26, FireWIN, VarioWIN, BioWIN XL 35-60	0	200501999
845	007609	PCB holder	0	200501999
850	006713	FMF board FireWIN	0	200501999
860	047774	Primary air pin for BioWIN10-26 FireWIN bis Los9 und PMX 21-26	0	200501999
870	006399	HUPA pump 15-4.0 U130mm for AccuWIN, AccuWIN Solar, VarioWIN, FireWIN	0	200501999
871	006419	Pump HEP 15-4.0 E 130 mm - Energy savings pump for FireWIN, VarioWIN	0	200501999
872	012139	Pump screw connection DN3/4“-1“ - brass for FireWIN, VarioWIN	0	200501999
875	044494	Cleaning cover FireWIN	0	200501999
880	044912	Clearer flat, complete for FireWIN, VarioWIN	0	200501999
885	045025	Reduction nipple 3/8“-3/4“, turned for FireWIN, VarioWIN	0	200501999
887	043803	Cone lifter BioWIN 10/15 to lot 29, FireWIN to lot 9	0	200501999
890	044694	Grate plate, top FireWIN to lot 9	0	200501999
895	044205	Return complete for FireWIN, VarioWIN	0	200501999
896	044201	Return pipe for FireWIN, VarioWIN	0	200501999
897	012140	Gravity brake SBM 3/4“ G1 IG/AG for VarioWIN	0	200501999
900	044693	Shaker lever FireWIN	0	200501999
910	042536	Shaker lever 1 PMX 21/26, BioWIN 10-26, FireWIN	0	200501999
920	044529	Shaker lever linkage	0	200501999
930	007049	Hinge “Stabilo 72”, vn for FireWIN	0	200501999
940	031251	Sound insulation 190 x 180 x 20 material: S200 for FireWIN	0	200501999
950	044612	Daily use container auger for FireWIN, VarioWIN	0	200501999
960	044896	Auger tube with friction bearing for daily use container, cpl., mounted for FireWIN, VarioWIN	0	200501999
970	045076	Screw M6 (with U-washer and nut) for heating surface cleaning complete for PMX, BioWIN10-26, FireWIN, VarioWIN	0	200501999
980	009219	Screw door handle bearing M12 (WAF17/30) - galvanised for HMX, BioWIN10-26, FireWIN, VarioWIN, EasyWIN Klassik/Premium 180	0	200501999
983	045223	Inner driving rod for BioWIN 10-26 from batch 30, VarioWIN, FireWIN	0	200501999
985	045232	Driving rod, complete for BioWIN10-26 à partir de lot 30 , FireWIn à partir de lot 10, VarioWIN	0	200501999
990	041498	Protective tube for exhaust gas sensor	0	200501999
993	045617	Swivel shaft complete, ash compactor for FireWIN, VarioWIN	0	200501999
994	016756	Hexagon screw M5x10 DIN 933	0	200501999
995	031545	Hexagon screw M5x12 DIN 7500 (not ilustrated)	0	200501999
998	017873	Hexagon screw DIN 933 - M8x20 - A2 for VarioWIN, FireWIN	0	200501999
1000	015059	Hexagon screw DIN 933 - M5x35 - 8.8 - galvanised for VarioWIN, FireWIN	0	200501999
1010	015026	Hexagon screw DIN 933 - M6x10 - 8.8 - galvanised for VarioWIN, FireWIN	0	200501999
1020	015041	Hexagon screw DIN 933 - M6x25 - 8.8 - galvanised for VarioWIN, FireWIN	0	200501999
1025	017051	Hexagon screw M6x12 DIN 933 (not illustrated)	0	200501999
1030	017020	Hexagon screw Niro DIN 933 - M5x12 - A2 for HMX, FireWIN, VarioWIN	0	200501999
1035	017086	Hexagon screw M8x20 DIN 933 (not illustrated)	0	200501999

Item no.	Article no.	Description	Serialnumber from	Serialnumber t
1040	027391	Hexagon pin screwdriver 10 mm DIN 911	0	200501999
1050	044854	Rear left side panel titanium Tiger 029/40782 be. for FireWIN	0	200501999
1050	044864	Rear left side panel garnet RAL 3011 tigre 089/30196 be. for FireWIN	0	200501999
1050	044867	Rear left side panel granite RAL 7016 tigre 089/71480 be. for FireWIN	0	200501999
1050	044876	Rear left side panel pearl white RAL 1013 tigre 089/10990 be. for FireWIN	0	200501999
1060	044852	Rear left side panel platinum silver Tiger 059/90551 be. for FireWIN	0	200501999
1060	044874	Rear left side panel quartz beige RAL1001 Tiger 089/15420 be. for FireWIN	0	200501999
1070	044853	Rear right side panel titanium 029/40782 for FireWIN	0	200501999
1070	044863	Rear right side panel garnet RAL3011 089/30196 for FireWIN	0	200501999
1070	044866	Rear right side panel granite RAL7016 089/71480 be. for FireWIN	0	200501999
1070	044875	Rear right side panel pearl white Tiger RAL1013 089/10990 be. for FireWIN	0	200501999
1080	046197	Rear right side panel platinum silver for FireWIN	0	200501999
1080	046198	Rear right side panel quartz beige for FireWIN	0	200501999
1090	017222	Countersinking screw DIN 965 - M3x12 - galvanised with cross slot for VarioWIN, FireWIN, EasyWIN Klassik/Premium 180	0	200501999
1095	016863	Countersinking screw M6x16	0	200501999
1097	017223	Countersinking screw DIN 965 - M4x70 - galvanised with cross slot for VarioWIN, FireWIN	0	200501999
1100	001031	ASL004 Safety valve 1/2“ 2.5 bar for GWX,OEX,OE/KN/M,ASL,GKW,GTX,ASN,GKA/E,MIRA,FireWIN,Vesto Art.Nr.:49292, VarioWIN, fittings ca	0	200501999
1110	003228	6.3A fuse (not illustrated)	0	200501999
1120	003663	Fuse holder	0	200501999
1130	016022	Silicone hose 5 x 8mm for FireWIN	0	200501999
1140	016025	Silicone hose PU1, diameter 25x320, secondary air, independent of room air for FireWIN, VarioWIN	0	200501999
1150	016026	Silicone hose SG1M, diameter 32x330, primary air, independent of room air for FireWIN, VarioWIN	0	200501999
1155	045028	Cover clamping plate for FireWIN, VarioWIN	0	200501999
1160	018184	Clamping pin DIN 1481 - Ø 5x14 for VarioWIN	0	200501999
1170	010286	ASL0021 Shut-off valve 1/4“ internal for pressure gauge R1/2“ for ASL/M,ÖR,SH,OEM,OEN,GTX,ASN,OEX,MIRA,FireWIN,fittings cabinet Ve	0	200501999
1175	045405	de: Spule 0,5mH mit Klemmleisten f.XB=Motor Förderschnecke u. X4=Rechtslauf u. X24=Linkslauf vorm.	0	200501999
1180	005010	Steel collar 3/4“x50, black for VarioWIN, FireWIN	0	200501999
1185	070323	Plug, 3-pin, black	0	200501999
1190	070162	Plug, 4-pin, black for auger motor for VarioWIN, FireWIN	0	200501999
1200	070374	Plug, 7-pin (3-pin black, 4-pin brown) for blower motor for FireWIN, VarioWIN	0	200501999
1210	012240	Positioning drive SSY319 (230V, 50 Hz, 150s) for VarioWIN, FireWIN	0	200501999
1220	009992	Leg - JTB30 - M10x60 with slot for OEX, NBA, MIRA, VarioWIN, FireWIN	0	200501999
1230	044613	Spur gear Z=32; m=2.5 for FireWIN from batch 6, VarioWIN - For units up to batch 5 009465 and 044612 must be replaced! -	0	200501999
1235	047115	Spur gear Z=28; m=1.5, for shake-out drive for FireWIN from batch 10, BioWIN 10/15 from batch 30, VarioWIN	0	200501999
1240	044778	Jet protection plate, complete for FireWIN, VarioWIN	0	200501999
1245	000353	KSN091 WAF Plug 1/2“ - no. 290 1- black No. 49304 for KSN, OEK, VestoWIN Klassik 170-220, FireWIN, VarioWIN	0	200501999
1247	012042	Plug 1/2“ MS, self-sealing, brass VER923 for VarioWIN, FireWIN	0	200501999
1250	502186	MES009M Immersion sensor	0	200501999
1260	006820	MES007 Immersion sensor (exhaust gas sensor) Pt 1000 for PMX, FireWIN, VarioWIN, BioWIN 10-26, BioWIN XL 35-60	0	200501999
1270	005452	OK-915 Immersion sleeve (129 mm) No.55501.04 for EKX,OK/E,GWX,KSN,ZHN,OK-915,ETX,SNX,FKX,MIRA,FireWIN,VestoWIN Klassik 170-220,	0	200501999
1280	007626	Thermocouple	0	200501999
1290	005672	Thermostat LS1+100-6U	0	200501999
1295	045623	Ash pan partition plate for FireWIN, VarioWIN	0	200501999
1300	009549	Heating door handle rod for FireWIN, VarioWIN	0	200501999
1310	009553	Ash door handle rod for FireWIN, VarioWIN	0	200501999
1320	044588	Door locking bar for FireWIN, VarioWIN	0	200501999
1330	044591	Door locking latch for FireWIN, VarioWIN	0	200501999
1335	000092	T-piece 3/4“ - no. 130 - black for VarioWIN, FireWIN	0	200501999
1340	012548	Union nut no. 374 1"	0	200501999
1350	000566	NBE964 Union nut 1/2” black no. 374 for NBE, HMX, FireWIN	0	200501999
1355	045907	Modification package for FireWIN motor - consists of: Parts of the modification package no. 046203 and motor no.007106	0	200501999

Item no.	Article no.	Description	Serialnumber from	Serialnumber
1360	006721	Baffle plate for FireWIN, VarioWIN	0	200501999
1370	046057	U-section silicone 6x7 5x500mm FireWIN	0	200501999
1380	006012	Silicone U-section, approx. 7x8.5 mm for VarioWIN, FireWIN, BioWIN 10-26	0	200501999
1390	020397	Washer M6, DIN125, polyamide, 6.6 for BioWIN 10-26,BioWIN XL 35-60	0	200501999
1400	020540	U-Washer DIN 134 - M6 - galvanised for VarioWIN, FireWIN	0	200501999
1410	031755	Disc 8 ISO 7093	0	200501999
1412	024780	Disc 10 ISO7089	0	200501999
1413	018058	U-washer	0	200501999
1415	017183	U-Washer DIN 125B - M12 - galvanised for VarioWIN, FireWIN, BioWIN XL 35-60	0	200501999
1420	012103	Return flow temperature increase valve 60 °C for FireWIN	0	200501999
1430	000446	Valve insert for three-way valve 3/4“ from the VC-Serie, VCZZ6000B for VarioWIN, FireWIN	0	200501999
1440	044782	Connecting piece HFR, coasting surface cleaning for FireWIN, VarioWIN	0	200501999
1445	045610	Compactor plate, ash compaction for FireWIN, VarioWIN	0	200501999
1450	044897	Cladding door complete granite for FireWIN	0	200501999
1450	044898	Cladding door complete titanium for FireWIN	0	200501999
1450	044899	Cladding door complete garnet for FireWIN	0	200501999
1450	044900	Cladding door complete pearl white for FireWIN	0	200501999
1460	007528	de: Verschraubung 3/4" für Pumpe FireWIN	0	200501999
1461	001306	Screw connection male thread D 1402, 3/4“x18 mm AG18 for FireWIN, VarioWIN	0	200501999
1462	007055	Flow pipe for FireWIN, VarioWIN	0	200501999
1464	045023	Hot water tank flow pipe 3/4“x118.5 mm - black for FireWIN, VarioWIN	0	200501999
1470	009966	Wago terminal block 261; 11-pin orange extra-low voltage Extnd. for VarioWIN, FireWIN, BioWIN XL 35-60	0	200501999
1480	009968	Wago terminal block 261; 13-pin orange extra-low voltage (no. 1-13), for VarioWIN, FireWIN, BioWIN 10-26, BioWIN XL 35-60 (*not il	0	200501999
1490	006833	Wago terminal block 261; 4-pin "12V GND"	0	200501999
1500	009948	Wago terminal block 261; 2-pin WMS 1-2, 3-piece for VarioWIN, FireWIN	0	200501999
1510	006834	Wago terminal block 261; 4-pin "safety 1-4"	0	200501999
1520	009960	Wago terminal block 261; 8-pin 230V extnd. for VarioWIN, FireWIN, BioWIN10-26, BioWIN XL 35-60 (*not illustrated)	0	200501999
1530	009891	Wago terminal block 261; 11-pin safety 1-11 for FireWIN, VarioWIN	0	200501999
1540	503367	FIRE023 Heat shield-cover for front window to reduce heat radiation during summer operation for FireWIN	0	200501999
1550	006217	Corrugated tube stainless steel DN16 x 320 with 3/4” union nuts + seals for FireWIN	0	200501999
1560	006218	Corrugated tube stainless steel DN16 x 500 with 3/4” union nuts + seals for FireWIN	0	200501999
1570	006213	Stainless steel corrugated tube, DN16x600 mm, 2 union nuts 3/4“, seals for VarioWIN, FireWIN	0	200501999
1580	000140	Stainless steel corrugated tube, DN16x680 mm, 2 union nuts 3/4“, seals for VarioWIN, FireWIN	0	200501999
1590	006298	Flexible stainless steel tube 3/4"x150mm	0	200501999
1593	045216	Limit switch bracket for BioWIN 10-26 from batch 30, VarioWIN, FireWIN	0	200501999
1595	044198	Pipe for mixer group 3/4“x81.5 mm - black for FireWIN, VarioWIN	0	200501999
1598	005563	Rocker switch SW/GR 0-1	0	200501999
1600	044614	Toothed washer for FireWIN, BioWIN XL 35-60, VarioWIN	0	200501999
1610	009465	Rotary feeder for FireWIN from batch 6, VarioWIN	0	200501999
1620	002444	Tension spring 9,8x8,7 DAx98x39IF 1.4310 WAX/LAX,FW WAX976	0	200501999
1630	016769	Cyl. screw M3 x 20 galvanized DIN 7985 A for FireWIN	0	200501999
1631	016780	Cylinder screw M4x12 DIN 7985	0	200501999
1632	018139	Cylinder screw 4.2x13 DIN7981SP (not illustrated)	0	200501999
1633	016950	Cyl. screw M5x12, galvanised, with cross slot, ISO 7045 (DIN 7985) for VarioWIN, FireWIN	0	200501999
1635	017884	Cylinder screw M5x12 TT, DIN 7500C for VestoWIN Premium 200-202	0	200501999
1640	009567	Cylindrical button 519-28-M10 for FireWIN, VarioWIN	0	200501999

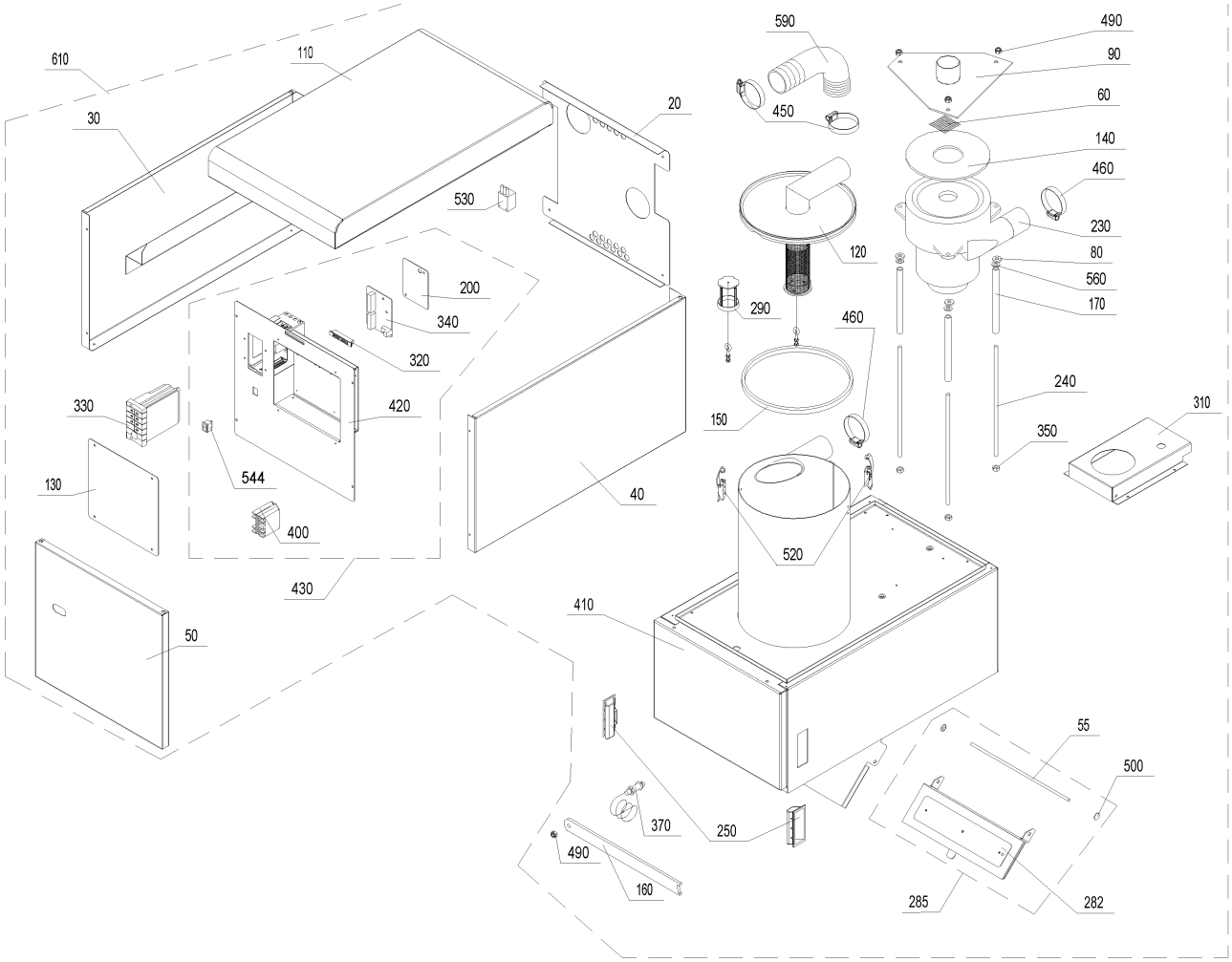
610
110
30
20
530
200
340
320
330
420
544
130
400
40
430
50
590
450
490
90
60
140
460
230
80
560
170
120
290
460
240
310
350
150
520
410
55
500
370
250
490
160
285
282

Item no.	Article no.	Description	Serialnumber from	Serialnumber to
20	042140	de: Abdeckung hinten PMX Zuführung	0	99999999999999999
30	042136	de: Abdeckung links PMX Zuführung	0	99999999999999999
40	042138	de: Abdeckung rechts PMX Zuführung	0	99999999999999999
50	042132	de: Abdeckung vorne PMX Zuführung	0	99999999999999999
55	042452	Feed axle	0	99999999999999999
60	041999	de: Ansauggitter PMX-Zuführung	0	99999999999999999
80	006851	Support plate, motor	0	99999999999999999
90	041862	de: Befestigungsplatte Gebläsemotor PMX-Zuführung	0	99999999999999999
110	042139	de: Deckel PMX Zuführung	0	99999999999999999
120	042133	de: Deckel Sammelkasten(Zyklon) kpl.mit Kolben Zuführung PMX,BioWIN	0	99999999999999999
130	041860	de: Deckel Schalterblende PMX Zuführung	0	99999999999999999
140	006847	Seal for turbine PMX 80x5mm	0	99999999999999999
150	042232	Seal section	0	99999999999999999
160	041527	de: Distanzhalter PMX-Zuführung	0	99999999999999999
170	041861	de: Distanzrohr PMX-Zuführung	0	99999999999999999
200	006879	de: Fiberplatte Modul-AP PMX-Zuf.100x75x	0	99999999999999999
230	044667	Blower motor 122151-12 for feed Conversion instructions for use with PMX 15-26 are enclosed! for BioWIN 10-26, PMX,BioWIN XL 35-6	0	99999999999999999
240	006863	de: Gewindestange DIN 975 8.8 M8x285 (PMX)	0	99999999999999999
250	009544	de: Griffmulde HMX,PMX,OKB,GSX	0	99999999999999999
282	042533	de: Klappe kpl. PMX/BioWIN-Zuführung (bei BioWIN bis einschließl. Los 29)	0	99999999999999999
285	042532	de: Klappengarnitur Pelletszuführung PMX Los1 bis Los10	0	99999999999999999
290	042230	de: Kolben kpl. montiert Zuführung PMX, BioWIN (BioWIN bis einschl. Los 30)	0	99999999999999999
310	041500	de: Luftkanal PMX-Zuführung	0	99999999999999999
320	001759	Magnetic lock No. 246.41 for GKW,NBE,GKX,GWX,GTX,PMX,HMX,FireWIN,VarioWIN, BioWIN 10-26	0	99999999999999999
330	006808	de: MES PZS-Modul Pelletszuführung PMX	0	99999999999999999
340	042004	de: Modul-Anschlußplatine PMX-Zuführung	0	99999999999999999
350	015992	Nut M8 DIN 934 V2 - LogWIN Klassik pellet ready	0	99999999999999999
370	006832	Proximity switch M12, inductive	0	99999999999999999
400	045087	Conversion kit relay	0	99999999999999999
420	042003	de: Schalterblende kpl. PMX Zuführung	0	99999999999999999
430	042003	de: Schalterblende kpl. PMX Zuführung	0	99999999999999999
450	006864	Hose clips 57/20 N SK W2	0	99999999999999999
460	006875	Hose clip 40-60	0	99999999999999999
490	016729	de: Sicherungsmutter DIN 985 - M 8 - 8 - verzinkt	0	99999999999999999
500	006897	Lock washer Ø 6	0	99999999999999999
520	009546	Spring lock	0	99999999999999999
530	070323	Plug, 3-pin, black	0	99999999999999999
544	005653	de: Wippschalter schwarz W 1pol 4A Rastbef.4,8	0	99999999999999999
560	018066	Washer DIN 134 - 8 - galvanised for VarioWIN	0	99999999999999999
590	042135	de: Verbindung Sammelkasten (Zyklon) Pelletszuführung, BioWIN auf 250mm kürzen	0	99999999999999999
610	042001	PMX0102 Feeding unit with control for PMX	0	99999999999999999

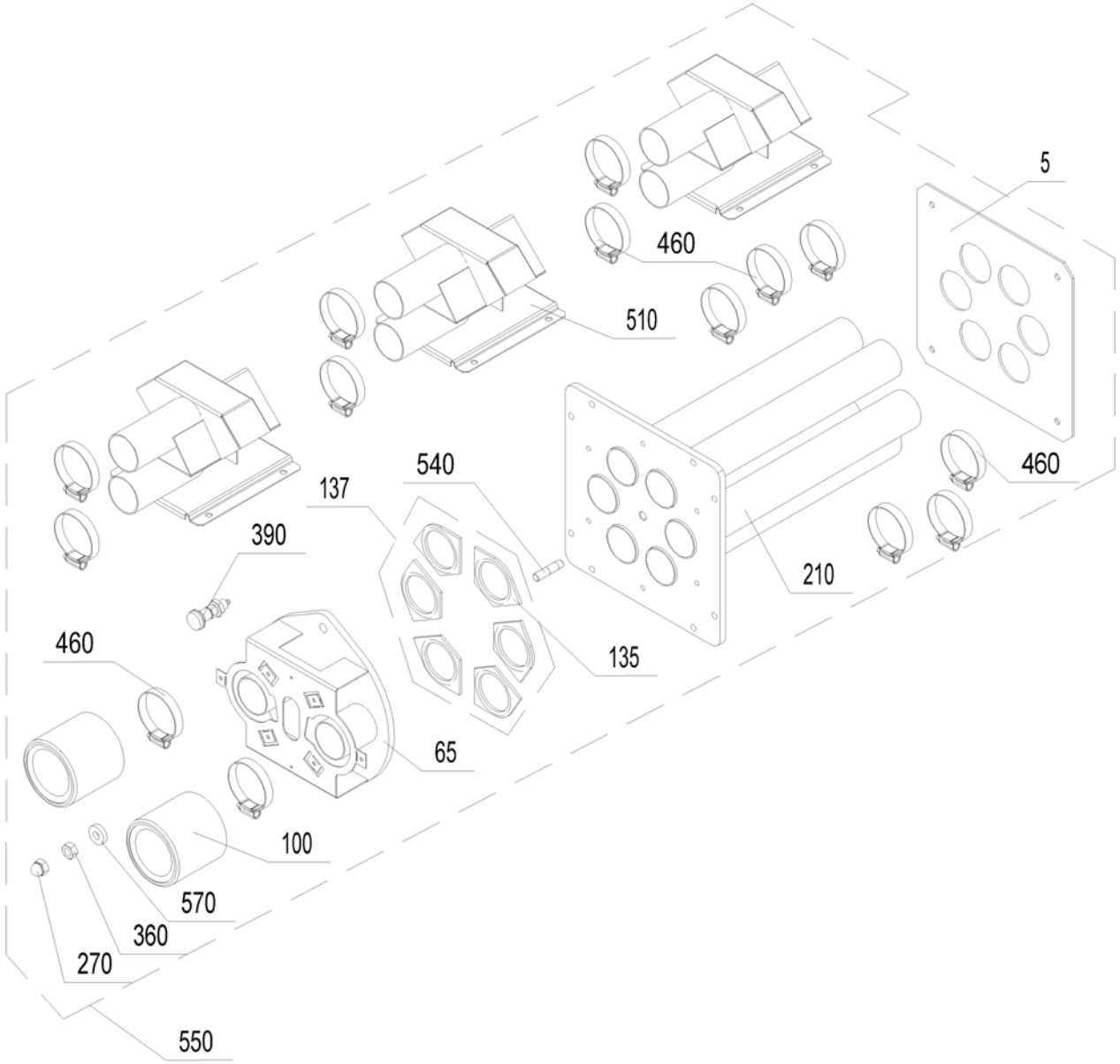
5
460
510
460
540
137
390
210
460
135
65
100
570
360
270
550

Item no.	Article no.	Description	Serialnumber from	Serialnumber to
5	041806	Changeover unit cover PMX041	0	99999999999999999
65	041799	Mounting plate	0	99999999999999999
100	042537	Fire protection collar	0	99999999999999999
105	503330	BIO010 Fire protection collars (2x) for masonry attachment for 3-way changeover unit	0	99999999999999999
135	006884	Seal ring for 3-way changeover unit	0	99999999999999999
137	042534	Seal set for feed, for 3-way changeover unit for PMX	0	99999999999999999
210	041800	Flange plate	0	99999999999999999
270	025966	Cap nut M10 DIN1587	0	99999999999999999
360	016616	Hexagon nut M10, DIN934 for 3-way changeover unit	0	99999999999999999
390	006870	Locking bolt GN 617-6-AK	0	99999999999999999
460	006875	Hose clip 40-60	0	99999999999999999
510	045304	Pellet feed probe for 3-way changeover unit	0	99999999999999999
540	016348	Stud screw M10x43 zinced	0	99999999999999999
550	042231	de: Umschalteinheit kpl.für PMX Zuführung	0	99999999999999999
570	006740	Washer MS25/10,5/6	0	99999999999999999

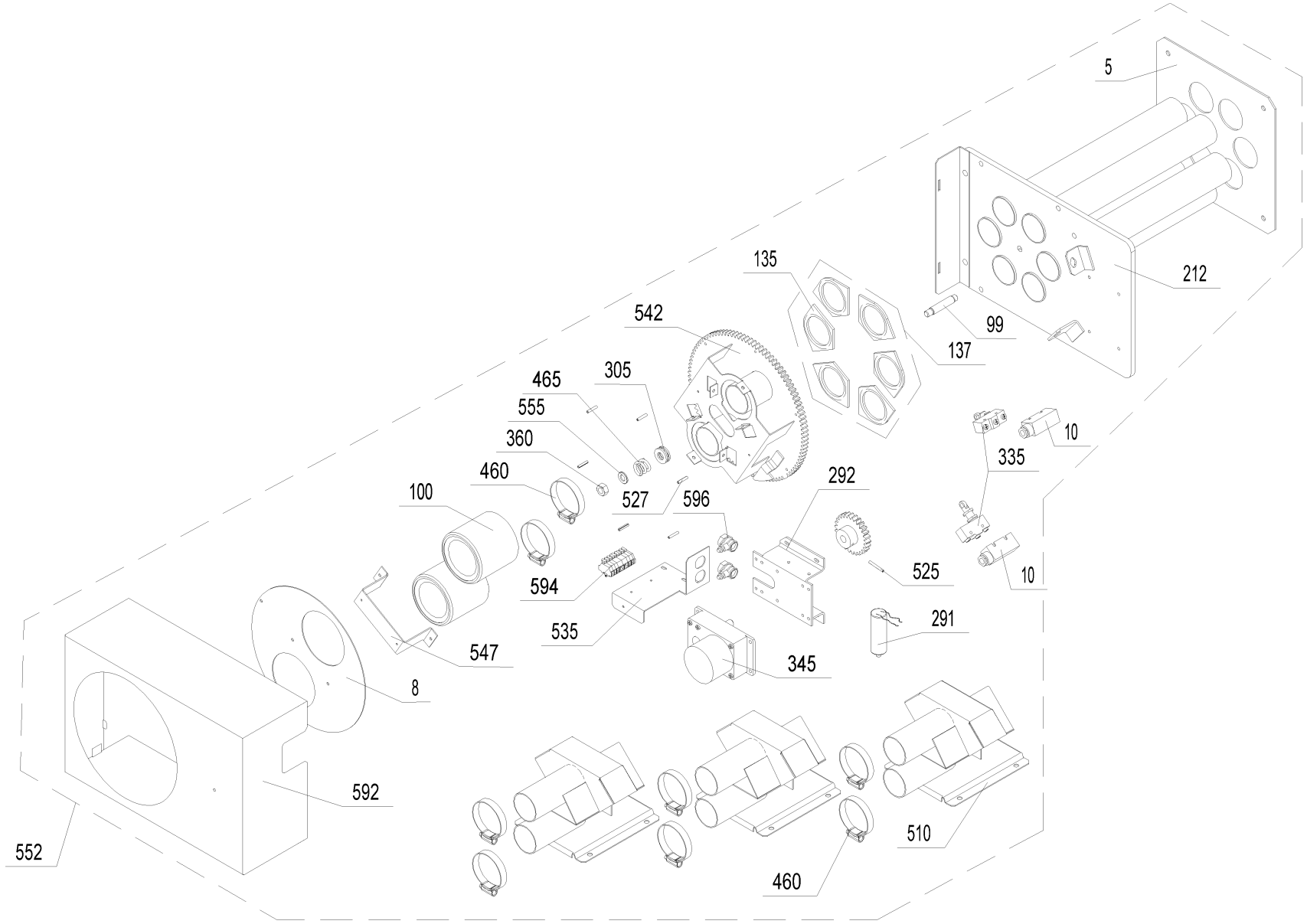
5
212
135
542
99
137
465
305
555
360
460
100
527
596
292
10
335
525
10
594
535
291
547
345
8
592
552
510
460

Item no.	Article no.	Description	Serialnumber from	Serialnumber to
5	041806	Changeover unit cover PMX041	0	99999999999999999
8	042444	PMX042, BIO020 Cover disc for fire protection	0	99999999999999999
10	005159	Cover APB-PG (PHM)	0	99999999999999999
85	042541	Zero point release bracket for PMX042	0	99999999999999999
99	006927	Bolt for mounting for 3-way changeover unit for PMX	0	99999999999999999
100	042537	Fire protection collar	0	99999999999999999
105	503330	BIO010 Fire protection collars (2x) for masonry attachment for 3-way changeover unit	0	99999999999999999
135	006884	Seal ring for 3-way changeover unit	0	99999999999999999
137	042534	Seal set for feed, for 3-way changeover unit for PMX	0	99999999999999999
212	042426	Flange plate	0	99999999999999999
291	007328	Capacitor for motor 0.68µF for PMX from batch 11, BioWIN XL 35-60	0	99999999999999999
292	042441	Motor bracket for 3-way changeover unit	0	99999999999999999
294	042427	Bracket microswitch	0	99999999999999999
296	042540	Bracket for zero point automatic changeover unit PMX	0	99999999999999999
305	006925	Axial ball bearing, for 3-way changeover unit for PMX from batch 11	0	99999999999999999
335	006936	Ash removal microswitch Z-15GQ21-B for 3-way changeover unit for PMX, BioWIN XL 35-60	0	99999999999999999
345	046617	Gear motor with condense, for 3-way changeover unit for BioWIN XL 35-60	0	99999999999999999
460	006875	Hose clip 40-60	0	99999999999999999
465	006926	Spiral spring, for 3-way changeover unit for PMX from batch 11	0	99999999999999999
510	045304	Pellet feed probe for 3-way changeover unit	0	99999999999999999
525	018665	Clamping pin 4x30, DIN 1481, for 3-way changeover unit for BioWIN XL 35-60 * not illustrated	0	99999999999999999
527	018666	Clamping pin DIN 1481 - Ø4x20, for 3-way changeover unit for PMX, VarioWIN (* not illustrated), VestoWIN Premium 200-202, VestoWIN	0	99999999999999999
535	045332	Connector bracket for 3-way changeover unit	0	99999999999999999
541	006930	Galvanised spur gear for 3-way changeover unit * not illustrated	0	99999999999999999
542	042422	End disc	0	99999999999999999
547	042446	U-bracket for automatic changeover unit PMX	0	99999999999999999
552	045976	BIO020 Fully automated changeover unit with 3 suction wands without fire protection collars	0	99999999999999999
555	018058	U-washer	0	99999999999999999
592	045331	Changeover unit cladding	0	99999999999999999
594	006921	Wago terminal block 261, 9-pin for 3-way changeover unit	0	99999999999999999
596	005479	Strain relief PG11	0	99999999999999999

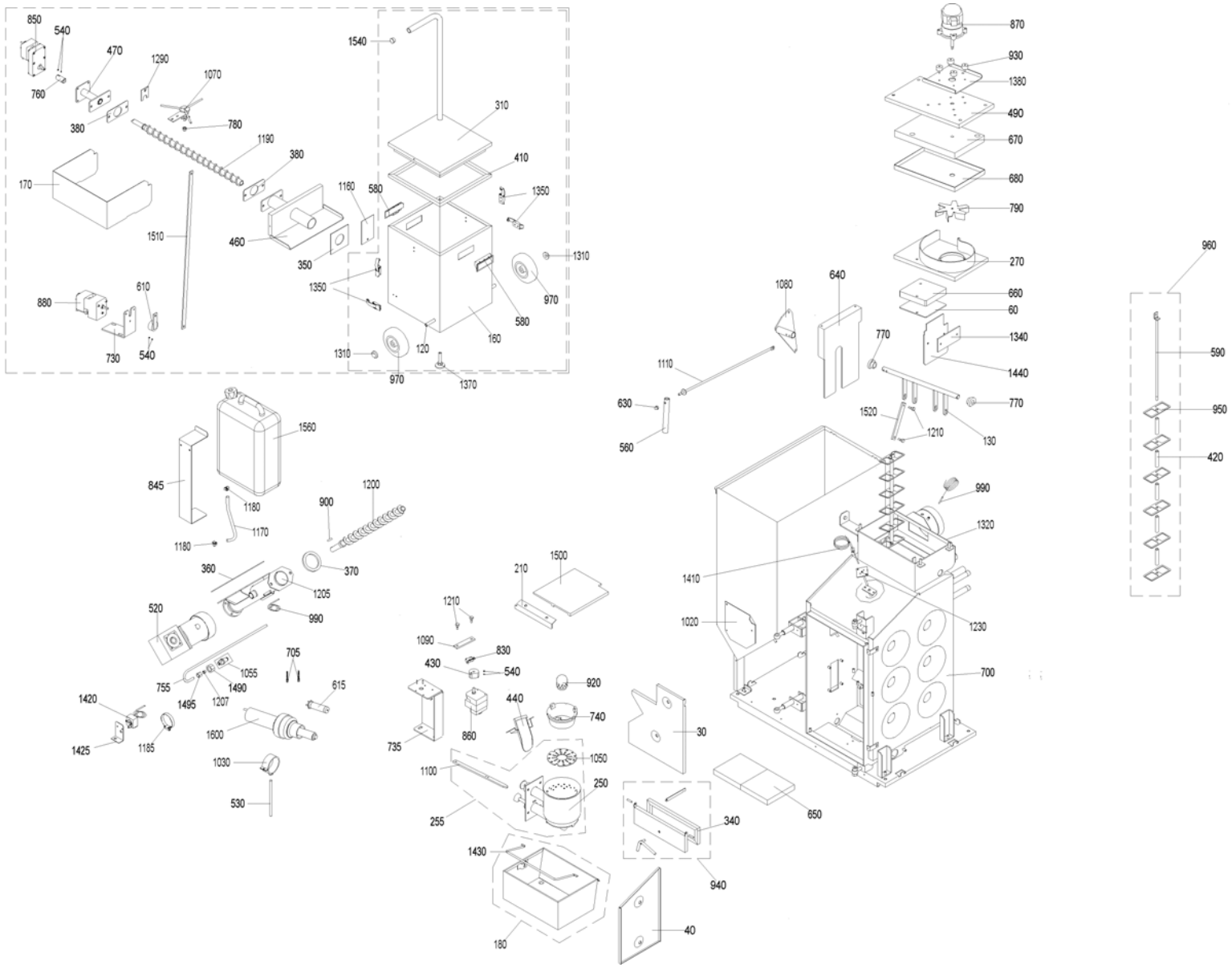
850
540
470
1290
1070
760
380
780
1190
380
170
1540
310
410
1160
580
1350
1510
460
350
1310
1350
970
880
610
580
160
730
540
1310
120
970
1370
870
930
1380
490
670
680
790
270
660
60
1340
1440
1080
640
770
1110
630
560
1520
1210
130
770
960
590
950
420
1560
845
1180
1170
1180
1200
900
370
360
1205
990
520
1500
210
1210
1090
830
430
540
920
440
740
860
735
1050
1100
250
255
1430
180
30
340
940
650
40
990
1320
1410
1020
1230
700
705
1055
755
1490
1495
1207
615
1420
1425
1185
1600
1030
530

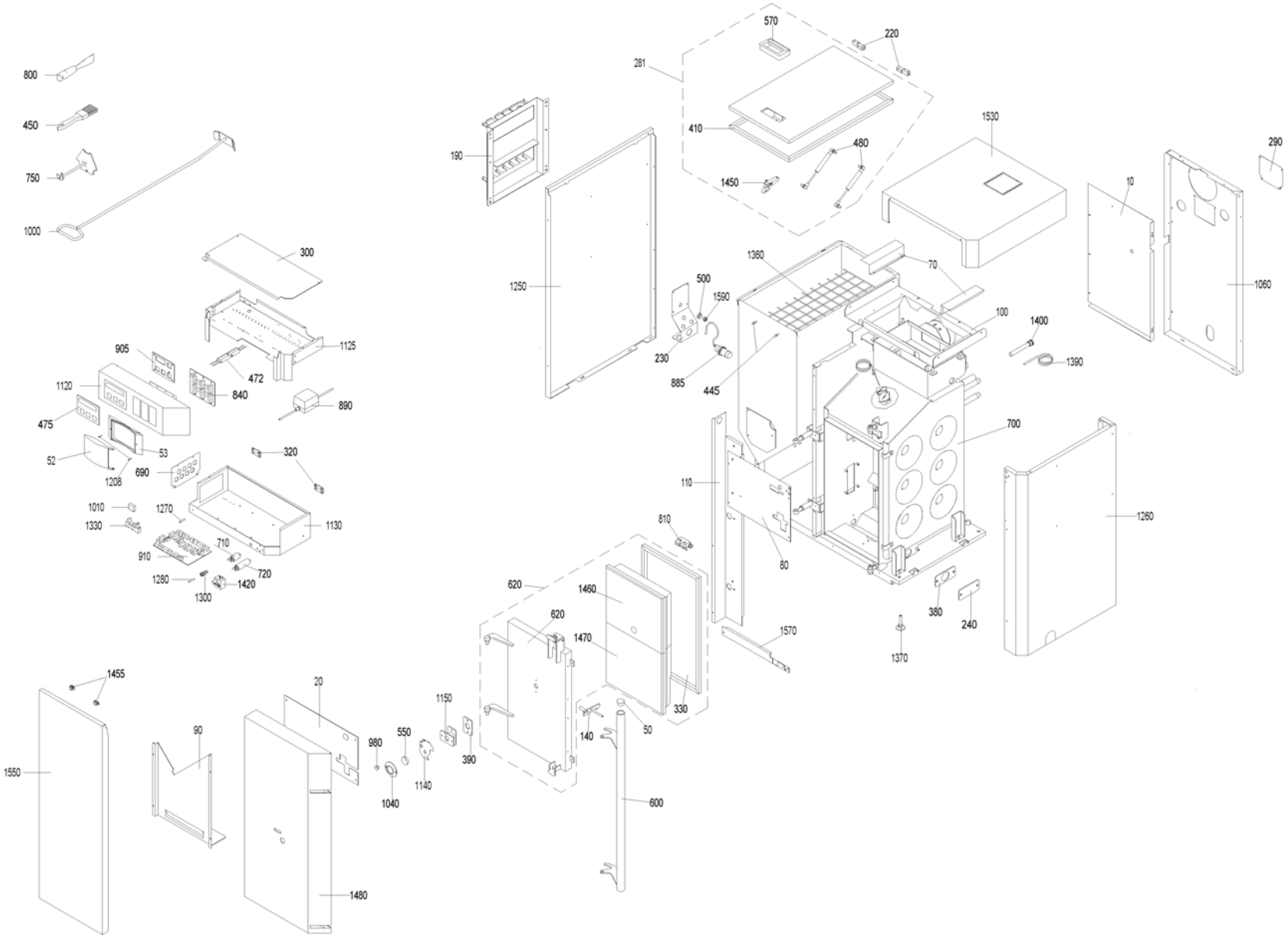
800
450
750
1000
300
1125
905
472
840
1120
890
475
53
52
1208
690
320
1010
1270
1130
1330
710
910
720
1280
1420
1300
1455
1550
90
20
980
550
1150
390
1140
1040
1480
570
220
281
410
480
1450
190
1250
1530
290
10
1060
1360
70
500
1590
100
1400
1390
230
885
445
700
110
1260
810
80
620
1460
620
1470
380
240
1570
1370
330
140
50
600

Item no.	Article no.	Description	Serialnumber from	Serialnumber t
10	040619	de: Abdeckblech Behälter hinten PMX	0	199902999
20	040714	de: Abdeckblech Heiztür PMX	0	199902999
30	041250	Rear cover plate for PMX, BioWIN10-26	0	199902999
40	041251	Right cover plate for PMX, BioWIN 10-26	0	199902999
50	004995	Cover for HMX, PMX, VestoWIN Premium 200-202, VestoWIN Klassik 170-220	0	199902999
52	009448	Cover MES	0	199902999
53	009446	Housing cover MES	0	199902999
60	041241	de: Abdeckung Isolierstein Gebläsekasten PMX	0	199902999
70	041538	de: Abdeckung Kabelschacht PMX	0	199902999
80	042013	de: Abdeckung für Kessel vorne PMX	0	199902999
90	042031	de: Abdeckung für Pelletsbehälter unten ab Los 3	0	199902999
100	040853	de: Abdeckung oben PMX	0	199902999
110	040699	de: Abdeckung vorne PMX Los 1+2	0	199902999
110	042587	de: Abdeckung vorne rot PMX ab Los3 PMX	0	199902999
130	041003	de: Achse Heizflächenreinigung PMX	0	199902999
140	041759	de: Anlüftsicherung PMX	0	199902999
165	042675	de: Aschebehälter kpl. PMX PMX	0	199902999
180	040650	de: Aschelade kpl.PMX	0	199902999
190	040438	de: Aufhängeleiste Reinigungsgeräte HMX,PMX	0	199902999
200	040616	de: Auflageblech Schallisolierung PMX Los 1+2	0	199902999
210	041249	Support rail for baffle plate for PMX, BioWIN 10-26	0	199902999
220	044802	Southco hinge	0	199902999
230	041189	de: Blech Füllstandschalter PMX	0	199902999
240	041717	Blind flange for ash removal for PMX, BioWIN10-26 - Only BioWIN Klassik/Premium -	0	199902999
250	042074	de: Brenner kpl.mont.(inkl.Rostplatte ob.u.Rüttelh.) PMX150	0	199902999
255	042074	de: Brenner kpl.mont.(inkl.Rostplatte ob.u.Rüttelh.) PMX150	0	199902999
260	042713	de: Bügel Zündgebläse PMX	0	199902999
270	040895	Cover for coasting surface for BioWIN10-26, PMX	0	199902999
281	042123	de: PMX10 Deckel Vorratsbehälter PMX150 und PMX150K	0	199902999
290	041539	Cover for rear wall for PMX, BioWIN 10-26	0	199902999
300	040854	de: Deckel Schaltkasten PMX	0	199902999
320	000067	de: Deckelscharnier GMX	0	199902999
330	041150	de: Dichtschnur Heiztür PMX	0	199902999
340	041258	de: Dichtschnur Putzklappe PMX	0	199902999
360	006842	Auger tube/reserve supply container seal 178x178x3mm for PMX, BioWIN 10-26, BioWIN XL35-60	0	199902999
370	006841	Auger tube/boiler seal for PMX, BioWIN 10-26	0	199902999
380	006848	Seal AAT 120x56x2	0	199902999
390	006844	Seal inspection hole 80x50x3 mm PMX	0	199902999
410	051412	de: Dichtung Deckel Asche/-Pellets-Behälter u.Zuführung PMX (16x15x2050mm)	0	199902999
420	900099	de: Artikel ausgelaufen - nicht mehr lieferbar	0	199902999
425	042510	Burn-back protection completely assembled for PMX, BioWIN 10-26	0	199902999
430	006762	de: Exzenter Rostrüttelung, vz PMX	0	199902999
440	041027	Down chute for pellets for PMX150, BioWIN 10/15	0	199902999
445	000191	KSL029 Forming screw, diameter 8x26/M5 for NBS,OEX,ASN,PMX,fittings cabinet Vesto 200, VarioWIN	0	199902999
450	017094	WERL056 Flat brush 1 1/2" NO. 72753 for FireWIN, VarioWIN, BioWIN10-26, BioWIN XL 35-60	0	199902999
472	006923	de: Funkentstörfilter F011-162/012 PMX	0	199902999
475	006837	BDM plate HMX/PMX	0	199902999
480	012600	Gas spring 4534DS 0100 N	0	199902999
490	040882	Blower cover for PMX, BioWIN 10-26	0	199902999
500	006339	de: Gegenmutter 209 MS NI	0	199902999
520	044663	Geared motor for auger 4rpm, pluggable conversion instructions for use are enclosed by PMX15 for BioWIN 10/15	0	199902999

Item no.	Article no.	Description	Serialnumber from	Serialnumber
530	900099	de: Artikel ausgelaufen - nicht mehr lieferbar	0	199902999
540	033098	de: Gewindestift M4x6 DIN 916 schwarz HMX,PMX	0	199902999
550	000307	de: Glasscheibe BOROFLOAT Ø 45/4 mm) GWX,FAX,GKW,HMX	0	199902999
570	009543	de: Griffmulde P1-30 PMX	0	199902999
590	900099	de: Artikel ausgelaufen - nicht mehr lieferbar	0	199902999
600	041149	de: Handgriff Heiztür PMX	0	199902999
615	006819	de: Heizelement 230V/1550W Zündgerät (Triac S Eco) PMX	0	199902999
615	010950	de: Heizelement 230V/1550W Zündgerät (Igniter) PMX	0	199902999
620	042947	de: Heiztür kpl. PMX	0	199902999
630	025967	Cap nut DIN 1587 - M8 - 6 - galvanised for FAX, FireWIN, VarioWIN, BioWIN 10-26, EasyWIN Klassik/Premium 180	0	199902999
640	041537	de: Isolierblech Heizflächenreinigung PMX	0	199902999
650	006790	de: Isolierstein Boden hinten 155x155x25 SN 450 PMX	0	199902999
670	006770	Insulation for blower cover RBP-9 (313x194x30) for PMX, BioWIN10-26	0	199902999
680	040887	Insulation support for blower cover for PMX, BioWIN 10-26	0	199902999
685	051685	de: Kabel zu Leistergebläse PMX	0	199902999
690	040618	de: Kabelführung Schaltkasten PMX	0	199902999
702	004385	KFE cock	0	199902999
705	045077	de: Kohlebürstenset (2Stk.) Zündgerät (Triac u. Igniter) PMX	0	199902999
710	007330	Condenser for motor MAB 500V, 3µF for HMX,PMX,SWK,BioWIN10-26,FireWIN,VarioWIN,BioWIN XL 35-60, EasyWIN Premium 180,LogWIN Premiu	0	199902999
720	007332	Condenser 4µF for auger motor for PMX150,BioWIN10/15,FireWIN,VarioWIN, BioWIN XL 35-60	0	199902999
735	041304	de: Konsole Rüttelmotor PMX	0	199902999
740	006710	de: Konus PMX150 aus Werkstoff 1.4855	0	199902999
750	041826	de: Konusheber PMX150	0	199902999
755	042091	de: Kupferleitung Rückbrandsicherung PMX	0	199902999
770	006758	Bearing for heating surface cleaning for PMX, BioWIN 10-26	0	199902999
790	040875	Blower wheel Ø140 for PMX 15, BioWIN10/15, FireWIN to batch 9, VarioWIN	0	199902999
795	007304	Magnet, complete, glued for motor for PMX, HMX from lot 24, BioWIN 10-26	0	199902999
800	009540	Spatula	0	199902999
810	005141	Microswitch Z-15GW4-B for heating door for FAX,HMX,PMX, SilvaWIN, FireWIN	0	199902999
830	009277	Air control microswitch	0	199902999
840	041429	de: Platine MES Module m.Litzen gelötet PMX,HMX	0	199902999
845	042090	de: Montagewinkel Wasserbehälter PMX	0	199902999
860	006794	de: Isolierstein Gebläsekasten 139x139x25 SN 450 PMX	0	199902999
860	006812	de: Motor Ascherüttelung PMX	0	199902999
870	044666	Motor for blower, ET new Conversion instructions for use with PMX 15-26 are enclosed! for BioWIN 10-26	0	199902999
885	006821	Proximity switch, capacitive	0	199902999
890	051645	Power supply unit 12V	0	199902999
900	006766	Feather key, without tightening DIN6885 A 6x6x28 mm for PMX, BioWIN10-26, FireWIN, VarioWIN, BioWIN XL 35-60	0	199902999
905	006804	de: Platine Bedienmodul inkl.Flachbandkabel PMX,HMX ab Los13/00	0	199902999
910	006800	de: Platine Feuerungsmodul PMX	0	199902999
920	006799	de: Primärluftdorn SiSiC (Keramik) PMX150	0	199902999
930	009283	de: Puffer (SM 20292 a B d25/h15 M6 65° Shore) Motor HMX,PMX	0	199902999
940	042015	de: Putzklappe kpl. PMX	0	199902999
960	042016	Clearer flat, complete for PMX, BioWIN 10-26	0	199902999
980	007638	de: Rändelmutter GN 530 M5 SW	0	199902999
990	006820	MES007 Immersion sensor (exhaust gas sensor) Pt 1000 for PMX, FireWIN, VarioWIN, BioWIN 10-26, BioWIN XL 35-60	0	199902999
1000	040328	Cleaning rake for HMX,PMX, EasyWIN Klassik/Premium 180, LogWIN Premium 180-505	0	199902999
1010	005026	OKE9281 Cable protection plate	0	199902999
1020	042014	de: Revisionsdeckel Pelletsbehälter kpl.	0	199902999
1030	042713	de: Bügel Zündgebläse PMX	0	199902999
1040	087300	de: Rosette für Schauglas für GKW,FAX,PMX,HMX GKW871	0	199902999

Item no.	Article no.	Description	Serialnumber from	Serialnumber t
1050	042076	de: Rostplatte oben PMX150	0	199902999
1055	042510	Burn-back protection completely assembled for PMX, BioWIN 10-26	0	199902999
1060	042012	de: Rückwand schwarz kpl.für PMX150	0	199902999
1080	041014	de: Rüttelarm Heizflächenreinigung PMX	0	199902999
1090	041303	de: Rüttelhebel 1 PMX	0	199902999
1100	041137	de: Rüttelhebel 2 PMX150, BioWIN 10-26	0	199902999
1110	900099	de: Artikel ausgelaufen - nicht mehr lieferbar	0	199902999
1120	042964	de: Schalterblende schwarz PMX	0	199902999
1125	040771	de: Schaltkasten Oberteil PMX	0	199902999
1130	040769	de: Schaltkasten Unterteil PMX	0	199902999
1140	041248	de: Schaulochabdeckung PMX	0	199902999
1150	041245	de: Schaulochflansch PMX	0	199902999
1170	008915	Hose 7x2	0	199902999
1180	006874	Hose clip ABA 11	0	199902999
1185	006905	Hose clip 50-70/9 C71 for PMX, BioWIN 10-26	0	199902999
1200	041139	Auger, complete for pellets for PMX, BioWIN 10-26	0	199902999
1205	042679	Sealed auger tube, new ET for PMX, BioWIN 10-26	0	199902999
1207	006378	Cutting ring DL8 07-151	0	199902999
1208	019836	Cylinder screw 2.9x16 (not illustrated)	0	199902999
1210	045076	Screw M6 (with U-washer and nut) for heating surface cleaning complete for PMX, BioWIN10-26, FireWIN, VarioWIN	0	199902999
1230	081761	de: Schutzrohr für Fühler für HMX,PMX	0	199902999
1240	900099	de: Artikel ausgelaufen - nicht mehr lieferbar	0	199902999
1250	042011	de: Seitenwand links für PMX	0	199902999
1260	042589	de: Seitenwand rechts rot PMX PMX	0	199902999
1270	006900	Fuse 1 A T 5x20 ceramic tube	0	199902999
1280	003228	6.3A fuse (not illustrated)	0	199902999
1300	003663	Fuse holder	0	199902999
1320	046056	de: U-Profildichtung Silikon 6x7,5x1300mm PMX,HMX	0	199902999
1330	005043	Base for relay	0	199902999
1340	041699	de: Spannblech PMX15	0	199902999
1360	006839	de: Stahlgitter vz, 608 x 337 mm, MW 50/50/4 mm PMX	0	199902999
1370	009990	Leg M10 x 40	0	199902999
1380	042387	de: Strahlschutzblech für PMX	0	199902999
1390	502186	MES009M Immersion sensor	0	199902999
1400	005452	OK-915 Immersion sleeve (129 mm) No.55501.04 for EKX,OK/E,GWX,KSN,ZHN,OK-915,ETX,SNX,FKX,MIRA,FireWIN,VestoWIN Klassik 170-220,	0	199902999
1410	007626	Thermocouple	0	199902999
1420	046451	Safety thermostat LS1+100/-6, Auger for FireWIN, BioWIN 10-26, BioWIN XL 35-60	0	199902999
1425	042081	de: Thermostatkonsole Sicherheitsthermostat PMX	0	199902999
1430	040452	de: Tragebügel für Aschelade 70X25X1,5	0	199902999
1450	061840	KSN022 Door catch for KSN,ZHN,PMX, VestoWIN Premium 200-202, VestoWIN Klassik 170-220	0	199902999
1455	000507	KSL022 Door catch GP3-78/444, No.300.223 for NBS,ASL/N,OEN/M/X,ZHL,KSL,PMX,OKN/M,OKE/S, fittings cabinet Vesto 200	0	199902999
1460	006792	de: Türstein oben 344x289x80 SF450 m.Schrauben (4x016719) PMX	0	199902999
1470	006793	de: Türstein unten 344x319x80 SF450 m.Schrauben (4x016719) PMX	0	199902999
1480	042010	de: Türverkleidung für PMX	0	199902999
1490	013749	Union nut 3/8"	0	199902999
1495	006351	Union nut ML8 GV	0	199902999
1500	006850	Baffle plate for PMX, BioWIN 10-26	0	199902999
1520	041004	de: Verbindungsstück Heizflächenreinigung PMX	0	199902999
1530	042590	de: Verkleidungsdeckel rechts rot PMX	0	199902999
1550	040683	de: Vorderwand PMX Los 1+2	0	199902999
1560	042064	de: Wasserbehälter kpl. PMX	0	199902999

Item no.	Article no.	Description	Serialnumber from	Serialnumber t
1570	041528	de: Winkel Isolierung Kessel unten PMX	0	199902999
1590	006338	de: Dichtungsstopfen PG9 Füllstandschalter PMX	0	199902999
1600	051697	de: Zündgerät (Leister Gebläse) Umbausatz PMX ab SN:113000	0	199902999
1600	053852	de: Zündgerät inkl. Kabel beigelegt.	0	199902999

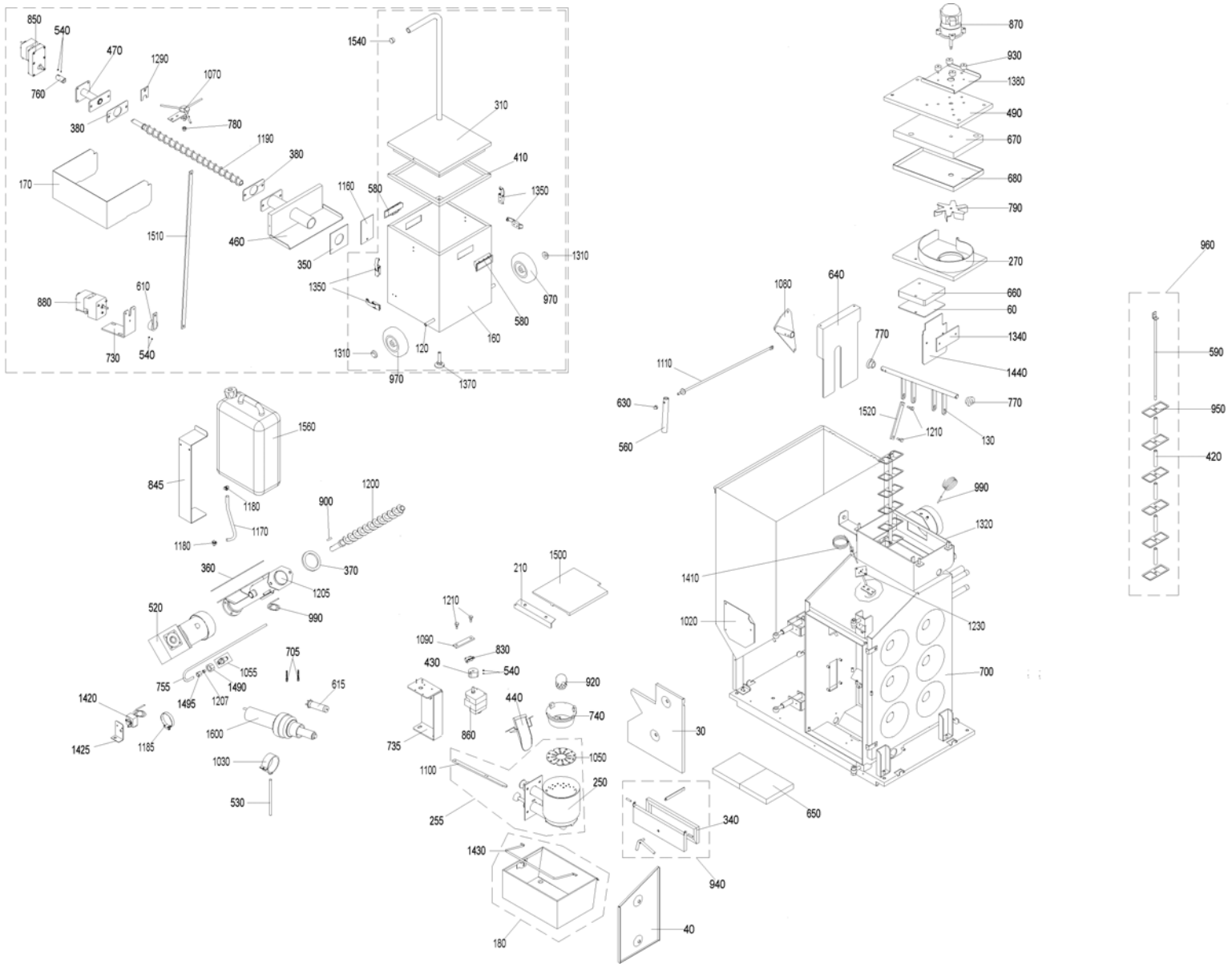
850
540
470
1290
1070
760
380
780
1190
380
170
1510
460
1160
580
350
1540
310
410
1350
1310
970
580
160
120
1310
970
1370
1350
880
610
730
540
1560
845
1180
1170
1180
1200
900
370
360
1205
990
520
705
1055
1490
1495
1207
755
615
1420
1425
1185
1600
1030
530
1500
210
1210
1090
830
430
540
920
440
740
860
735
1050
1100
250
255
1430
180
30
340
940
40
650
870
930
1380
490
670
680
790
270
660
60
1340
1440
770
1080
640
1110
630
560
1520
1210
130
770
990
1320
1410
1020
1230
700
960
590
950
420

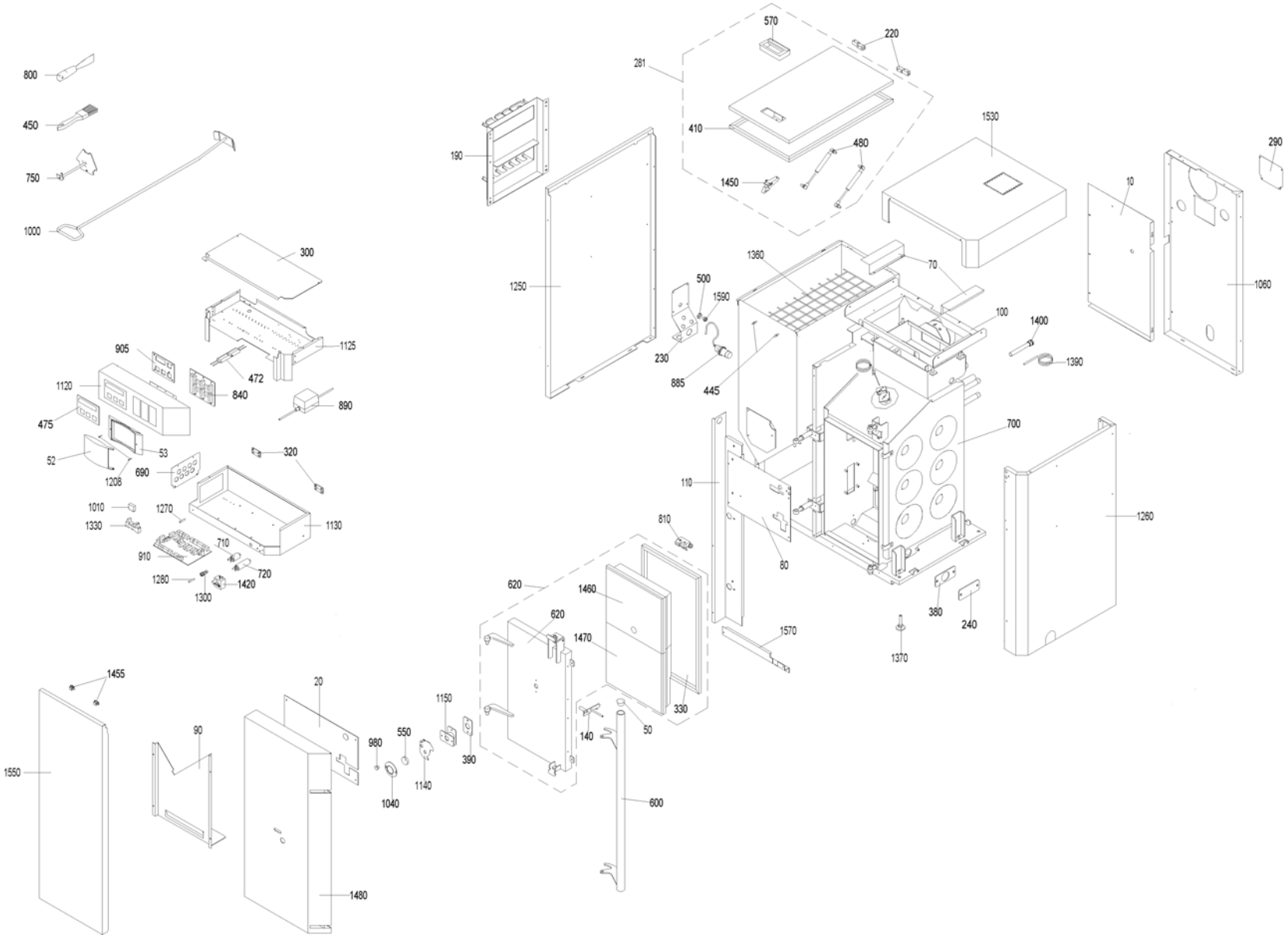
800
450
750
1000
300
1125
905
472
840
1120
890
475
53
52
1208
690
320
1010
1270
1130
1330
710
910
720
1280
1420
1300
1455
1550
90
20
980
550
1150
390
1140
1040
1480
570
220
281
410
480
1450
190
1250
1530
290
10
1060
1360
70
500
1590
100
1400
1390
230
885
445
700
110
1260
810
80
620
1460
620
1470
380
240
1570
1370
330
140
50
600

Item no.	Article no.	Description	Serialnumber from	Serialnumber t
10	040619	de: Abdeckblech Behälter hinten PMX	0	199902999
20	040714	de: Abdeckblech Heiztür PMX	0	199902999
30	041250	Rear cover plate for PMX, BioWIN10-26	0	199902999
40	041251	Right cover plate for PMX, BioWIN 10-26	0	199902999
50	004995	Cover for HMX, PMX, VestoWIN Premium 200-202, VestoWIN Klassik 170-220	0	199902999
52	009448	Cover MES	0	199902999
53	009446	Housing cover MES	0	199902999
60	041241	de: Abdeckung Isolierstein Gebläsekasten PMX	0	199902999
70	041538	de: Abdeckung Kabelschacht PMX	0	199902999
80	042013	de: Abdeckung für Kessel vorne PMX	0	199902999
90	042031	de: Abdeckung für Pelletsbehälter unten ab Los 3	0	199902999
100	040853	de: Abdeckung oben PMX	0	199902999
110	040699	de: Abdeckung vorne PMX Los 1+2	0	199902999
110	042587	de: Abdeckung vorne rot PMX ab Los3 PMX	0	199902999
120	041889	de: Achse Aschebehälterrad PMX	0	199902999
130	041003	de: Achse Heizflächenreinigung PMX	0	199902999
140	041759	de: Anlüftsicherung PMX	0	199902999
160	042675	de: Aschebehälter kpl. PMX PMX	0	199902999
165	042675	de: Aschebehälter kpl. PMX PMX	0	199902999
170	041920	de: Ascheblech für Ascheaustragung PMX	0	199902999
190	040438	de: Aufhängeleiste Reinigungsgeräte HMX,PMX	0	199902999
200	040616	de: Auflageblech Schallisolierung PMX Los 1+2	0	199902999
210	041249	Support rail for baffle plate for PMX, BioWIN 10-26	0	199902999
220	044802	Southco hinge	0	199902999
230	041189	de: Blech Füllstandschalter PMX	0	199902999
240	041717	Blind flange for ash removal for PMX, BioWIN10-26 - Only BioWIN Klassik/Premium -	0	199902999
250	042074	de: Brenner kpl.mont.(inkl.Rostplatte ob.u.Rüttelh.) PMX150	0	199902999
255	042074	de: Brenner kpl.mont.(inkl.Rostplatte ob.u.Rüttelh.) PMX150	0	199902999
260	042713	de: Bügel Zündgebläse PMX	0	199902999
270	040895	Cover for coasting surface for BioWIN10-26, PMX	0	199902999
281	042123	de: PMX10 Deckel Vorratsbehälter PMX150 und PMX150K	0	199902999
290	041539	Cover for rear wall for PMX, BioWIN 10-26	0	199902999
300	040854	de: Deckel Schaltkasten PMX	0	199902999
310	041886	de: Deckel kpl. Aschebehälter PMX	0	199902999
320	000067	de: Deckelscharnier GMX	0	199902999
330	041150	de: Dichtschnur Heiztür PMX	0	199902999
340	041258	de: Dichtschnur Putzklappe PMX	0	199902999
350	006843	Ash conveyor seal Ø72x48,3x2mm PMX,BioWIN	0	199902999
360	006842	Auger tube/reserve supply container seal 178x178x3mm for PMX, BioWIN 10-26, BioWIN XL35-60	0	199902999
370	006841	Auger tube/boiler seal for PMX, BioWIN 10-26	0	199902999
380	006848	Seal AAT 120x56x2	0	199902999
390	006844	Seal inspection hole 80x50x3 mm PMX	0	199902999
410	051412	de: Dichtung Deckel Asche/-Pellets-Behälter u.Zuführung PMX (16x15x2050mm)	0	199902999
420	900099	de: Artikel ausgelaufen - nicht mehr lieferbar	0	199902999
425	042510	Burn-back protection completely assembled for PMX, BioWIN 10-26	0	199902999
430	006762	de: Exzenter Rostrüttelung, vz PMX	0	199902999
440	041027	Down chute for pellets for PMX150, BioWIN 10/15	0	199902999
445	000191	KSL029 Forming screw, diameter 8x26/M5 for NBS,OEX,ASN,PMX,fittings cabinet Vesto 200, VarioWIN	0	199902999
450	017094	WERL056 Flat brush 1 1/2" NO. 72753 for FireWIN, VarioWIN, BioWIN10-26, BioWIN XL 35-60	0	199902999
460	041715	de: Flansch Aschebehälter PMX	0	199902999
470	041710	de: Flansch Motor (Ascheaustragung) PMX	0	199902999

Item no.	Article no.	Description	Serialnumber from	Serialnumber t
472	006923	de: Funkentstörfilter F011-162/012 PMX	0	199902999
475	006837	BDM plate HMX/PMX	0	199902999
480	012600	Gas spring 4534DS 0100 N	0	199902999
490	040882	Blower cover for PMX, BioWIN 10-26	0	199902999
500	006339	de: Gegenmutter 209 MS NI	0	199902999
520	044663	Geared motor for auger 4rpm, pluggable conversion instructions for use are enclosed by PMX15 for BioWIN 10/15	0	199902999
530	900099	de: Artikel ausgelaufen - nicht mehr lieferbar	0	199902999
540	033098	de: Gewindestift M4x6 DIN 916 schwarz HMX,PMX	0	199902999
550	000307	de: Glasscheibe BOROFLOAT Ø 45/4 mm) GWX,FAX,GKW,HMX	0	199902999
570	009543	de: Griffmulde P1-30 PMX	0	199902999
590	900099	de: Artikel ausgelaufen - nicht mehr lieferbar	0	199902999
600	041149	de: Handgriff Heiztür PMX	0	199902999
615	006819	de: Heizelement 230V/1550W Zündgerät (Triac S Eco) PMX	0	199902999
615	010950	de: Heizelement 230V/1550W Zündgerät (Igniter) PMX	0	199902999
620	042947	de: Heiztür kpl. PMX	0	199902999
640	041537	de: Isolierblech Heizflächenreinigung PMX	0	199902999
650	006790	de: Isolierstein Boden hinten 155x155x25 SN 450 PMX	0	199902999
660	006794	de: Isolierstein Gebläsekasten 139x139x25 SN 450 PMX	0	199902999
670	006770	Insulation for blower cover RBP-9 (313x194x30) for PMX, BioWIN10-26	0	199902999
680	040887	Insulation support for blower cover for PMX, BioWIN 10-26	0	199902999
685	051685	de: Kabel zu Leistergebläse PMX	0	199902999
690	040618	de: Kabelführung Schaltkasten PMX	0	199902999
702	004385	KFE cock	0	199902999
705	045077	de: Kohlebürstenset (2Stk.) Zündgerät (Triac u. Igniter) PMX	0	199902999
710	007330	Condenser for motor MAB 500V, 3µF for HMX,PMX,SWK,BioWIN10-26,FireWIN,VarioWIN,BioWIN XL 35-60, EasyWIN Premium 180,LogWIN Premiu	0	199902999
720	007332	Condenser 4µF for auger motor for PMX150,BioWIN10/15,FireWIN,VarioWIN, BioWIN XL 35-60	0	199902999
735	041304	de: Konsole Rüttelmotor PMX	0	199902999
740	006710	de: Konus PMX150 aus Werkstoff 1.4855	0	199902999
750	041826	de: Konusheber PMX150	0	199902999
755	042091	de: Kupferleitung Rückbrandsicherung PMX	0	199902999
760	006749	de: Kupplung Ascheaustragung PMX	0	199902999
770	006758	Bearing for heating surface cleaning for PMX, BioWIN 10-26	0	199902999
780	006745	Ash conveyor bearing bush	0	199902999
790	040875	Blower wheel Ø140 for PMX 15, BioWIN10/15, FireWIN to batch 9, VarioWIN	0	199902999
795	007304	Magnet, complete, glued for motor for PMX, HMX from lot 24, BioWIN 10-26	0	199902999
800	009540	Spatula	0	199902999
810	005141	Microswitch Z-15GW4-B for heating door for FAX,HMX,PMX, SilvaWIN, FireWIN	0	199902999
830	009277	Air control microswitch	0	199902999
840	041429	de: Platine MES Module m.Litzen gelötet PMX,HMX	0	199902999
845	042090	de: Montagewinkel Wasserbehälter PMX	0	199902999
850	044665	Motor	0	199902999
860	006812	de: Motor Ascherüttelung PMX	0	199902999
870	044666	Motor for blower, ET new Conversion instructions for use with PMX 15-26 are enclosed! for BioWIN 10-26	0	199902999
885	006821	Proximity switch, capacitive	0	199902999
890	051645	Power supply unit 12V	0	199902999
900	006766	Feather key, without tightening DIN6885 A 6x6x28 mm for PMX, BioWIN10-26, FireWIN, VarioWIN, BioWIN XL 35-60	0	199902999
905	006804	de: Platine Bedienmodul inkl.Flachbandkabel PMX,HMX ab Los13/00	0	199902999
910	006800	de: Platine Feuerungsmodul PMX	0	199902999
920	006799	de: Primärluftdorn SiSiC (Keramik) PMX150	0	199902999
930	009283	de: Puffer (SM 20292 a B d25/h15 M6 65° Shore) Motor HMX,PMX	0	199902999
940	042015	de: Putzklappe kpl. PMX	0	199902999

Item no.	Article no.	Description	Serialnumber from	Serialnumber t
960	042016	Clearer flat, complete for PMX, BioWIN 10-26	0	199902999
970	006888	Wheel AG 125-12	0	199902999
980	007638	de: Rändelmutter GN 530 M5 SW	0	199902999
990	006820	MES007 Immersion sensor (exhaust gas sensor) Pt 1000 for PMX, FireWIN, VarioWIN, BioWIN 10-26, BioWIN XL 35-60	0	199902999
1000	040328	Cleaning rake for HMX,PMX, EasyWIN Klassik/Premium 180, LogWIN Premium 180-505	0	199902999
1010	005026	OKE9281 Cable protection plate	0	199902999
1020	042014	de: Revisionsdeckel Pelletsbehälter kpl.	0	199902999
1030	042713	de: Bügel Zündgebläse PMX	0	199902999
1040	087300	de: Rosette für Schauglas für GKW,FAX,PMX,HMX GKW871	0	199902999
1050	042076	de: Rostplatte oben PMX150	0	199902999
1055	042510	Burn-back protection completely assembled for PMX, BioWIN 10-26	0	199902999
1060	042012	de: Rückwand schwarz kpl.für PMX150	0	199902999
1070	041705	de: Rührwerk PMX	0	199902999
1080	041014	de: Rüttelarm Heizflächenreinigung PMX	0	199902999
1090	041303	de: Rüttelhebel 1 PMX	0	199902999
1100	041137	de: Rüttelhebel 2 PMX150, BioWIN 10-26	0	199902999
1120	042964	de: Schalterblende schwarz PMX	0	199902999
1125	040771	de: Schaltkasten Oberteil PMX	0	199902999
1130	040769	de: Schaltkasten Unterteil PMX	0	199902999
1140	041248	de: Schaulochabdeckung PMX	0	199902999
1150	041245	de: Schaulochflansch PMX	0	199902999
1160	041888	de: Schieber Aschebehälter PMX	0	199902999
1170	008915	Hose 7x2	0	199902999
1180	006874	Hose clip ABA 11	0	199902999
1185	006905	Hose clip 50-70/9 C71 for PMX, BioWIN 10-26	0	199902999
1190	041712	de: Schnecke Ascheaustragung PMX	0	199902999
1200	041139	Auger, complete for pellets for PMX, BioWIN 10-26	0	199902999
1205	042679	Sealed auger tube, new ET for PMX, BioWIN 10-26	0	199902999
1207	006378	Cutting ring DL8 07-151	0	199902999
1208	019836	Cylinder screw 2.9x16 (not illustrated)	0	199902999
1210	045076	Screw M6 (with U-washer and nut) for heating surface cleaning complete for PMX, BioWIN10-26, FireWIN, VarioWIN	0	199902999
1230	081761	de: Schutzrohr für Fühler für HMX,PMX	0	199902999
1240	900099	de: Artikel ausgelaufen - nicht mehr lieferbar	0	199902999
1250	042011	de: Seitenwand links für PMX	0	199902999
1260	042589	de: Seitenwand rechts rot PMX PMX	0	199902999
1270	006900	Fuse 1 A T 5x20 ceramic tube	0	199902999
1280	003228	6.3A fuse (not illustrated)	0	199902999
1290	041716	de: Sicherungsblech Schnecke PMX	0	199902999
1300	003663	Fuse holder	0	199902999
1310	006889	Washer Ø12	0	199902999
1320	046056	de: U-Profildichtung Silikon 6x7,5x1300mm PMX,HMX	0	199902999
1330	005043	Base for relay	0	199902999
1340	041699	de: Spannblech PMX15	0	199902999
1350	009546	Spring lock	0	199902999
1360	006839	de: Stahlgitter vz, 608 x 337 mm, MW 50/50/4 mm PMX	0	199902999
1370	009990	Leg M10 x 40	0	199902999
1380	042387	de: Strahlschutzblech für PMX	0	199902999
1390	502186	MES009M Immersion sensor	0	199902999
1400	005452	OK-915 Immersion sleeve (129 mm) No.55501.04 for EKX,OK/E,GWX,KSN,ZHN,OK-915,ETX,SNX,FKX,MIRA,FireWIN,VestoWIN Klassik 170-220,	0	199902999
1410	007626	Thermocouple	0	199902999
1420	046451	Safety thermostat LS1+100/-6, Auger for FireWIN, BioWIN 10-26, BioWIN XL 35-60	0	199902999

Item no.	Article no.	Description	Serialnumber from	Serialnumber t
1425	042081	de: Thermostatkonsole Sicherheitsthermostat PMX	0	199902999
1440	041263	de: Trennblech PMX15	0	199902999
1450	061840	KSN022 Door catch for KSN,ZHN,PMX, VestoWIN Premium 200-202, VestoWIN Klassik 170-220	0	199902999
1455	000507	KSL022 Door catch GP3-78/444, No.300.223 for NBS,ASL/N,OEN/M/X,ZHL,KSL,PMX,OKN/M,OKE/S, fittings cabinet Vesto 200	0	199902999
1460	006792	de: Türstein oben 344x289x80 SF450 m.Schrauben (4x016719) PMX	0	199902999
1470	006793	de: Türstein unten 344x319x80 SF450 m.Schrauben (4x016719) PMX	0	199902999
1480	042010	de: Türverkleidung für PMX	0	199902999
1490	013749	Union nut 3/8"	0	199902999
1495	006351	Union nut ML8 GV	0	199902999
1500	006850	Baffle plate for PMX, BioWIN 10-26	0	199902999
1510	041604	de: Verbindungsschiene Heizflächenreinigung PMX	0	199902999
1520	041004	de: Verbindungsstück Heizflächenreinigung PMX	0	199902999
1530	042590	de: Verkleidungsdeckel rechts rot PMX	0	199902999
1540	003263	de: Verschlußstopfen schwarz GPN 300 F14 KSN,ZHN,PMX	0	199902999
1550	040683	de: Vorderwand PMX Los 1+2	0	199902999
1560	042064	de: Wasserbehälter kpl. PMX	0	199902999
1570	041528	de: Winkel Isolierung Kessel unten PMX	0	199902999
1590	006338	de: Dichtungsstopfen PG9 Füllstandschalter PMX	0	199902999
1600	051697	de: Zündgerät (Leister Gebläse) Umbausatz PMX ab SN:113000	0	199902999
1600	053852	de: Zündgerät inkl. Kabel beigelegt.	0	199902999

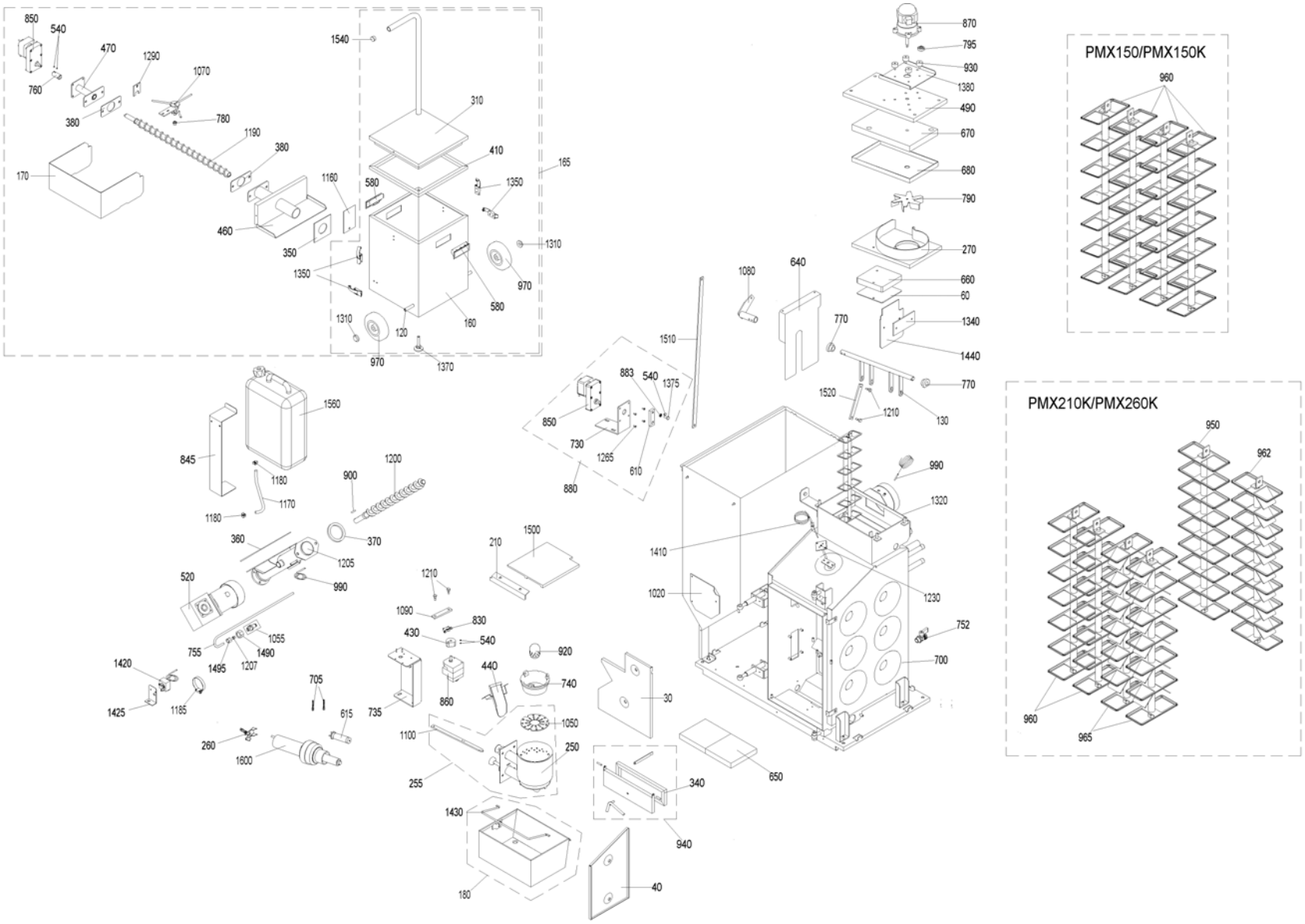
PMX150/PMX150K
PMX210K/PMX260K

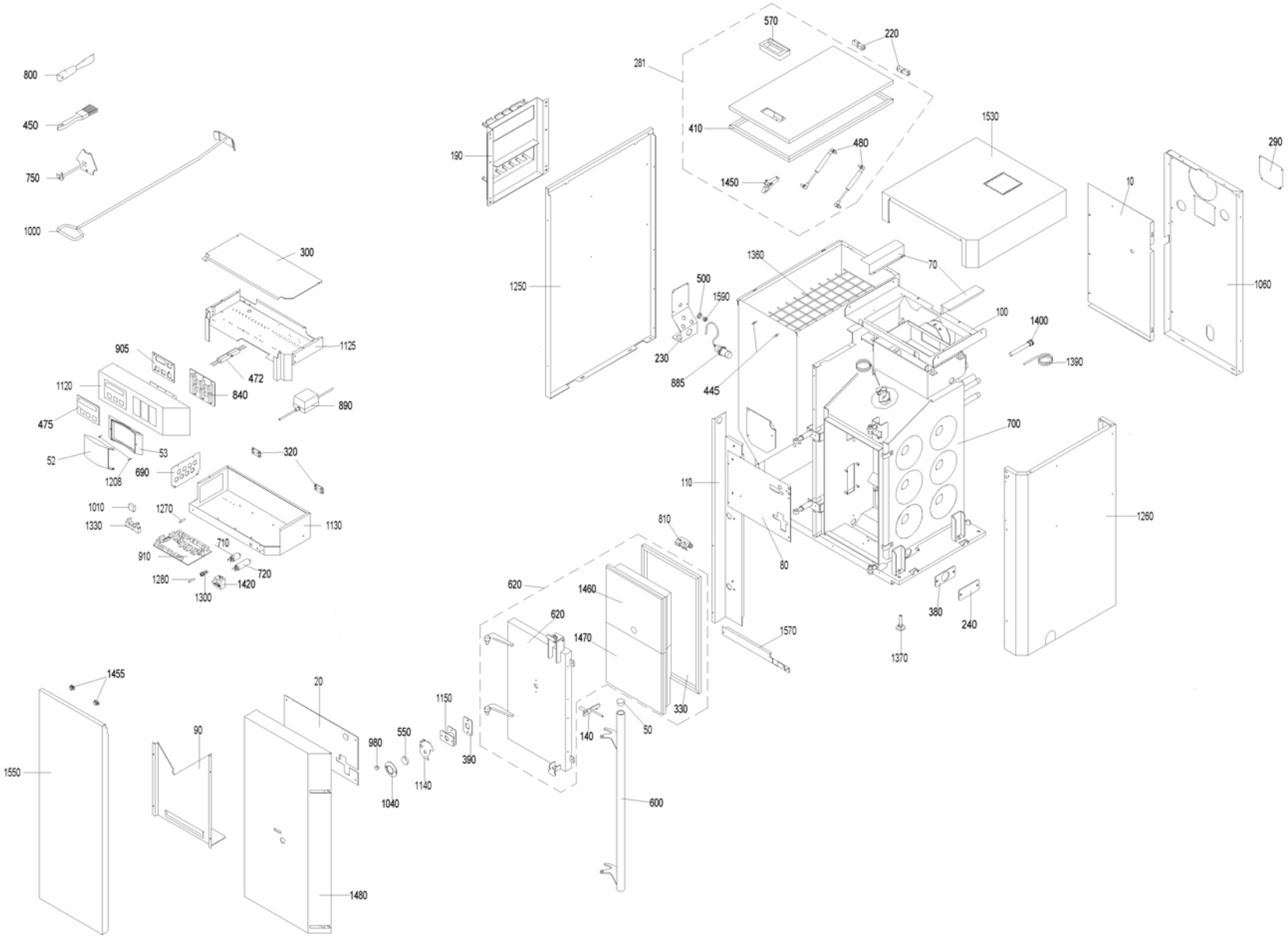
800
450
750
1000
300
1125
905
472
840
1120
890
475
53
52
1208
690
320
1010
1270
1130
1330
710
910
720
1280
1420
1300
1455
1550
90
20
980
550
1150
390
1140
1040
1480
570
220
281
410
480
1450
190
1250
1530
290
10
1060
1360
70
500
1590
100
1400
1390
230
885
445
700
110
1260
810
80
620
1460
620
1470
380
240
1570
1370
330
140
50
600

Item no.	Article no.	Description	Serialnumber from	Serialnumber t
10	040619	de: Abdeckblech Behälter hinten PMX	199903000	9999999999999
20	040714	de: Abdeckblech Heiztür PMX	199903000	9999999999999
30	041250	Rear cover plate for PMX, BioWIN10-26	199903000	9999999999999
40	041251	Right cover plate for PMX, BioWIN 10-26	199903000	9999999999999
50	004995	Cover for HMX, PMX, VestoWIN Premium 200-202, VestoWIN Klassik 170-220	199903000	9999999999999
52	009448	Cover MES	199903000	9999999999999
53	009446	Housing cover MES	199903000	9999999999999
60	042375	Cover for insulating stone/blower box for PMX 210/260, BioWIN 10-26	199903000	9999999999999
70	041538	de: Abdeckung Kabelschacht PMX	199903000	9999999999999
80	042013	de: Abdeckung für Kessel vorne PMX	199903000	9999999999999
90	042031	de: Abdeckung für Pelletsbehälter unten ab Los 3	199903000	9999999999999
100	040853	de: Abdeckung oben PMX	199903000	9999999999999
110	040699	de: Abdeckung vorne PMX Los 1+2	199903000	9999999999999
110	042587	de: Abdeckung vorne rot PMX ab Los3 PMX	199903000	9999999999999
120	041889	de: Achse Aschebehälterrad PMX	199903000	9999999999999
130	042372	de: Achse Heizflächenreinigung zu PMX210/260	199903000	9999999999999
140	041759	de: Anlüftsicherung PMX	199903000	9999999999999
160	042675	de: Aschebehälter kpl. PMX PMX	199903000	9999999999999
165	042675	de: Aschebehälter kpl. PMX PMX	199903000	9999999999999
170	041920	de: Ascheblech für Ascheaustragung PMX	199903000	9999999999999
190	040438	de: Aufhängeleiste Reinigungsgeräte HMX,PMX	199903000	9999999999999
210	041249	Support rail for baffle plate for PMX, BioWIN 10-26	199903000	9999999999999
220	044802	Southco hinge	199903000	9999999999999
230	041189	de: Blech Füllstandschalter PMX	199903000	9999999999999
240	041717	Blind flange for ash removal for PMX, BioWIN10-26 - Only BioWIN Klassik/Premium -	199903000	9999999999999
250	042712	de: Brenner kpl.mont.(inkl.Rostplatte ob.u.Rüttelh.) PMX210/260	199903000	9999999999999
255	042712	de: Brenner kpl.mont.(inkl.Rostplatte ob.u.Rüttelh.) PMX210/260	199903000	9999999999999
260	042713	de: Bügel Zündgebläse PMX	199903000	9999999999999
270	040895	Cover for coasting surface for BioWIN10-26, PMX	199903000	9999999999999
281	042123	de: PMX10 Deckel Vorratsbehälter PMX150 und PMX150K	199903000	9999999999999
290	041539	Cover for rear wall for PMX, BioWIN 10-26	199903000	9999999999999
300	040854	de: Deckel Schaltkasten PMX	199903000	9999999999999
310	041886	de: Deckel kpl. Aschebehälter PMX	199903000	9999999999999
320	000067	de: Deckelscharnier GMX	199903000	9999999999999
330	041150	de: Dichtschnur Heiztür PMX	199903000	9999999999999
340	041258	de: Dichtschnur Putzklappe PMX	199903000	9999999999999
350	006843	Ash conveyor seal Ø72x48,3x2mm PMX,BioWIN	199903000	9999999999999
360	006842	Auger tube/reserve supply container seal 178x178x3mm for PMX, BioWIN 10-26, BioWIN XL35-60	199903000	9999999999999
370	006841	Auger tube/boiler seal for PMX, BioWIN 10-26	199903000	9999999999999
380	006848	Seal AAT 120x56x2	199903000	9999999999999
390	006844	Seal inspection hole 80x50x3 mm PMX	199903000	9999999999999
410	051412	de: Dichtung Deckel Asche/-Pellets-Behälter u.Zuführung PMX (16x15x2050mm)	199903000	9999999999999
420	900099	de: Artikel ausgelaufen - nicht mehr lieferbar	199903000	9999999999999
425	042510	Burn-back protection completely assembled for PMX, BioWIN 10-26	199903000	9999999999999
430	006762	de: Exzenter Rostrüttelung, vz PMX	199903000	9999999999999
440	042106	Down chute for pellets for PMX210/260,BioWIN21-26	199903000	9999999999999
445	000191	KSL029 Forming screw, diameter 8x26/M5 for NBS,OEX,ASN,PMX,fittings cabinet Vesto 200, VarioWIN	199903000	9999999999999
450	017094	WERL056 Flat brush 1 1/2" NO. 72753 for FireWIN, VarioWIN, BioWIN10-26, BioWIN XL 35-60	199903000	9999999999999
460	041715	de: Flansch Aschebehälter PMX	199903000	9999999999999
470	041710	de: Flansch Motor (Ascheaustragung) PMX	199903000	9999999999999
472	006923	de: Funkentstörfilter F011-162/012 PMX	199903000	9999999999999

Item no.	Article no.	Description	Serialnumber from	Serialnumber t
475	006837	BDM plate HMX/PMX	199903000	9999999999999
480	012600	Gas spring 4534DS 0100 N	199903000	9999999999999
490	040882	Blower cover for PMX, BioWIN 10-26	199903000	9999999999999
500	006339	de: Gegenmutter 209 MS NI	199903000	9999999999999
520	044664	Geared motor for auger 7,8 RPM, pluggable conversion instructions for use are enclosed by PMX21/26 for BioWIN 21/26, BioWIN XL 35-	199903000	9999999999999
530	900099	de: Artikel ausgelaufen - nicht mehr lieferbar	199903000	9999999999999
540	033098	de: Gewindestift M4x6 DIN 916 schwarz HMX,PMX	199903000	9999999999999
550	000307	de: Glasscheibe BOROFLOAT Ø 45/4 mm) GWX,FAX,GKW,HMX	199903000	9999999999999
570	009543	de: Griffmulde P1-30 PMX	199903000	9999999999999
580	009544	de: Griffmulde HMX,PMX,OKB,GSX	199903000	9999999999999
590	900099	de: Artikel ausgelaufen - nicht mehr lieferbar	199903000	9999999999999
600	041149	de: Handgriff Heiztür PMX	199903000	9999999999999
610	041605	de: Hebel unten Heizflächenreinigung PMX bis Los30	199903000	9999999999999
610	041735	de: Hebel unten Heizflächenreinigung PMX ab Los31	199903000	9999999999999
615	006819	de: Heizelement 230V/1550W Zündgerät (Triac S Eco) PMX	199903000	9999999999999
615	010950	de: Heizelement 230V/1550W Zündgerät (Igniter) PMX	199903000	9999999999999
620	042947	de: Heiztür kpl. PMX	199903000	9999999999999
640	041537	de: Isolierblech Heizflächenreinigung PMX	199903000	9999999999999
650	006917	Insulating stone for rear floor 225 x 155 x 25 for PMX21/26, BioWIN 10-26 (Only BioWIN Klassik/Premium)	199903000	9999999999999
660	006916	Blower box insulating stone 190 x 139 x 25 SN450 for PMX21/26,BioWIN10-26	199903000	9999999999999
670	006770	Insulation for blower cover RBP-9 (313x194x30) for PMX, BioWIN10-26	199903000	9999999999999
680	040887	Insulation support for blower cover for PMX, BioWIN 10-26	199903000	9999999999999
685	051685	de: Kabel zu Leistergebläse PMX	199903000	9999999999999
690	040618	de: Kabelführung Schaltkasten PMX	199903000	9999999999999
700	042360	de: kiotel Lager-re-hi Alu	199903000	9999999999999
702	004385	KFE cock	199903000	9999999999999
705	045077	de: Kohlebürstenset (2Stk.) Zündgerät (Triac u. Igniter) PMX	199903000	9999999999999
710	007330	Condenser for motor MAB 500V, 3µF for HMX,PMX,SWK,BioWIN10-26,FireWIN,VarioWIN,BioWIN XL 35-60, EasyWIN Premium 180,LogWIN Premiu	199903000	9999999999999
720	007334	Capacitor 8µF for auger motor, MAB MKP8 for PMX21/26, BioWIN 21/26, BioWIN XL 35-60	199903000	9999999999999
730	041603	de: Konsole Motor (Heizflächenreinigung) PMX bis Los30	199903000	9999999999999
730	041737	de: Konsole Motor Heizflächenreinigung PMX ab Los 31	199903000	9999999999999
735	042104	de: Konsole für Rüttelmotor PMX210/260	199903000	9999999999999
740	006911	Cone top part/cone for PMX 21/26, BioWIN21/26	199903000	9999999999999
750	042421	de: Konusheber PMX210/260,BioWIN210/260 bis Los 29	199903000	9999999999999
752	004385	KFE cock	199903000	9999999999999
755	042091	de: Kupferleitung Rückbrandsicherung PMX	199903000	9999999999999
760	006749	de: Kupplung Ascheaustragung PMX	199903000	9999999999999
770	006758	Bearing for heating surface cleaning for PMX, BioWIN 10-26	199903000	9999999999999
780	006745	Ash conveyor bearing bush	199903000	9999999999999
790	043892	Blower wheel Ø150mm for BioWIN 21/26	199903000	9999999999999
795	007304	Magnet, complete, glued for motor for PMX, HMX from lot 24, BioWIN 10-26	199903000	9999999999999
800	009540	Spatula	199903000	9999999999999
810	005141	Microswitch Z-15GW4-B for heating door for FAX,HMX,PMX, SilvaWIN, FireWIN	199903000	9999999999999
830	009277	Air control microswitch	199903000	9999999999999
840	041429	de: Platine MES Module m.Litzen gelötet PMX,HMX	199903000	9999999999999
845	042090	de: Montagewinkel Wasserbehälter PMX	199903000	9999999999999
850	044665	Motor	199903000	9999999999999
860	006812	de: Motor Ascherüttelung PMX	199903000	9999999999999
870	044666	Motor for blower, ET new Conversion instructions for use with PMX 15-26 are enclosed! for BioWIN 10-26	199903000	9999999999999
880	006814	de: Austauschmotor Heizflächenreinigung PMX bis Los30	199903000	9999999999999
880	006814	de: Austauschmotor Heizflächenreinigung PMX bis Los30	199903000	9999999999999

Item no.	Article no.	Description	Serialnumber from	Serialnumber t
880	044665	Motor	199903000	9999999999999
883	016659	Hexagon nut M8 DIN434	199903000	9999999999999
885	006821	Proximity switch, capacitive	199903000	9999999999999
890	051645	Power supply unit 12V	199903000	9999999999999
900	006766	Feather key, without tightening DIN6885 A 6x6x28 mm for PMX, BioWIN10-26, FireWIN, VarioWIN, BioWIN XL 35-60	199903000	9999999999999
905	006804	de: Platine Bedienmodul inkl.Flachbandkabel PMX,HMX ab Los13/00	199903000	9999999999999
910	006800	de: Platine Feuerungsmodul PMX	199903000	9999999999999
920	047774	Primary air pin for BioWIN10-26 FireWIN bis Los9 und PMX 21-26	199903000	9999999999999
930	009283	de: Puffer (SM 20292 a B d25/h15 M6 65° Shore) Motor HMX,PMX	199903000	9999999999999
940	042015	de: Putzklappe kpl. PMX	199903000	9999999999999
950	042715	Clearer flat, complete rear downdraft for PMX21/26, BioWIN 21/26	199903000	9999999999999
960	042016	Clearer flat, complete for PMX, BioWIN 10-26	199903000	9999999999999
962	042716	Clearer flat, complete rear updraft for PMX21/26, BioWIN21/26	199903000	9999999999999
965	042717	Clearer flat, complete front updraft for PMX 21/26, BioWIN21/26	199903000	9999999999999
970	006888	Wheel AG 125-12	199903000	9999999999999
980	007638	de: Rändelmutter GN 530 M5 SW	199903000	9999999999999
990	006820	MES007 Immersion sensor (exhaust gas sensor) Pt 1000 for PMX, FireWIN, VarioWIN, BioWIN 10-26, BioWIN XL 35-60	199903000	9999999999999
1000	040328	Cleaning rake for HMX,PMX, EasyWIN Klassik/Premium 180, LogWIN Premium 180-505	199903000	9999999999999
1010	005026	OKE9281 Cable protection plate	199903000	9999999999999
1020	042014	de: Revisionsdeckel Pelletsbehälter kpl.	199903000	9999999999999
1030	042713	de: Bügel Zündgebläse PMX	199903000	9999999999999
1040	087300	de: Rosette für Schauglas für GKW,FAX,PMX,HMX GKW871	199903000	9999999999999
1050	006912	Grate plate, top PMX210/260	199903000	9999999999999
1055	042510	Burn-back protection completely assembled for PMX, BioWIN 10-26	199903000	9999999999999
1060	042711	de: Rückwand kpl. PMX210/260	199903000	9999999999999
1070	041705	de: Rührwerk PMX	199903000	9999999999999
1080	041014	de: Rüttelarm Heizflächenreinigung PMX	199903000	9999999999999
1090	042536	Shaker lever 1 PMX 21/26, BioWIN 10-26, FireWIN	199903000	9999999999999
1100	042103	Shaker lever 2 PMX21/26,BioWIN10-26	199903000	9999999999999
1120	042964	de: Schalterblende schwarz PMX	199903000	9999999999999
1125	040771	de: Schaltkasten Oberteil PMX	199903000	9999999999999
1130	040769	de: Schaltkasten Unterteil PMX	199903000	9999999999999
1140	041248	de: Schaulochabdeckung PMX	199903000	9999999999999
1150	041245	de: Schaulochflansch PMX	199903000	9999999999999
1160	041888	de: Schieber Aschebehälter PMX	199903000	9999999999999
1170	008915	Hose 7x2	199903000	9999999999999
1180	006874	Hose clip ABA 11	199903000	9999999999999
1185	006905	Hose clip 50-70/9 C71 for PMX, BioWIN 10-26	199903000	9999999999999
1190	041712	de: Schnecke Ascheaustragung PMX	199903000	9999999999999
1200	041139	Auger, complete for pellets for PMX, BioWIN 10-26	199903000	9999999999999
1205	042679	Sealed auger tube, new ET for PMX, BioWIN 10-26	199903000	9999999999999
1207	006378	Cutting ring DL8 07-151	199903000	9999999999999
1208	019836	Cylinder screw 2.9x16 (not illustrated)	199903000	9999999999999
1210	045076	Screw M6 (with U-washer and nut) for heating surface cleaning complete for PMX, BioWIN10-26, FireWIN, VarioWIN	199903000	9999999999999
1230	081761	de: Schutzrohr für Fühler für HMX,PMX	199903000	9999999999999
1250	042011	de: Seitenwand links für PMX	199903000	9999999999999
1260	042589	de: Seitenwand rechts rot PMX PMX	199903000	9999999999999
1265	031097	de: Senkschraube M5x10, DIN 965, schwarz chrom., m. KS	199903000	9999999999999
1270	006900	Fuse 1 A T 5x20 ceramic tube	199903000	9999999999999
1280	003228	6.3A fuse (not illustrated)	199903000	9999999999999
1290	041716	de: Sicherungsblech Schnecke PMX	199903000	9999999999999

Item no.	Article no.	Description	Serialnumber from	Serialnumber t
1300	003663	Fuse holder	199903000	9999999999999
1310	006889	Washer Ø12	199903000	9999999999999
1320	046056	de: U-Profildichtung Silikon 6x7,5x1300mm PMX,HMX	199903000	9999999999999
1330	005043	Base for relay	199903000	9999999999999
1340	042369	Clamping plate for PMX21/26, BioWIN 10-26	199903000	9999999999999
1350	009546	Spring lock	199903000	9999999999999
1360	006839	de: Stahlgitter vz, 608 x 337 mm, MW 50/50/4 mm PMX	199903000	9999999999999
1370	009990	Leg M10 x 40	199903000	9999999999999
1375	016721	Hexagon screw M8x16 DIN 933	199903000	9999999999999
1380	042387	de: Strahlschutzblech für PMX	199903000	9999999999999
1390	502186	MES009M Immersion sensor	199903000	9999999999999
1400	005452	OK-915 Immersion sleeve (129 mm) No.55501.04 for EKX,OK/E,GWX,KSN,ZHN,OK-915,ETX,SNX,FKX,MIRA,FireWIN,VestoWIN Klassik 170-220,	199903000	9999999999999
1410	007626	Thermocouple	199903000	9999999999999
1420	046451	Safety thermostat LS1+100/-6, Auger for FireWIN, BioWIN 10-26, BioWIN XL 35-60	199903000	9999999999999
1425	042081	de: Thermostatkonsole Sicherheitsthermostat PMX	199903000	9999999999999
1440	042368	Partition plate for PMX21/26,BioWIN10-26	199903000	9999999999999
1450	061840	KSN022 Door catch for KSN,ZHN,PMX, VestoWIN Premium 200-202, VestoWIN Klassik 170-220	199903000	9999999999999
1455	000507	KSL022 Door catch GP3-78/444, No.300.223 for NBS,ASL/N,OEN/M/X,ZHL,KSL,PMX,OKN/M,OKE/S, fittings cabinet Vesto 200	199903000	9999999999999
1460	006792	de: Türstein oben 344x289x80 SF450 m.Schrauben (4x016719) PMX	199903000	9999999999999
1470	006793	de: Türstein unten 344x319x80 SF450 m.Schrauben (4x016719) PMX	199903000	9999999999999
1480	042010	de: Türverkleidung für PMX	199903000	9999999999999
1490	013749	Union nut 3/8"	199903000	9999999999999
1495	006351	Union nut ML8 GV	199903000	9999999999999
1500	006850	Baffle plate for PMX, BioWIN 10-26	199903000	9999999999999
1510	041604	de: Verbindungsschiene Heizflächenreinigung PMX	199903000	9999999999999
1520	041004	de: Verbindungsstück Heizflächenreinigung PMX	199903000	9999999999999
1530	042590	de: Verkleidungsdeckel rechts rot PMX	199903000	9999999999999
1540	003263	de: Verschlußstopfen schwarz GPN 300 F14 KSN,ZHN,PMX	199903000	9999999999999
1550	042073	de: Vorderwand kpl.für PMX ab Los 3	199903000	9999999999999
1560	042064	de: Wasserbehälter kpl. PMX	199903000	9999999999999
1570	041528	de: Winkel Isolierung Kessel unten PMX	199903000	9999999999999
1590	006338	de: Dichtungsstopfen PG9 Füllstandschalter PMX	199903000	9999999999999
1600	051697	de: Zündgerät (Leister Gebläse) Umbausatz PMX ab SN:113000	199903000	9999999999999
1600	053852	de: Zündgerät inkl. Kabel beigelegt.	199903000	9999999999999

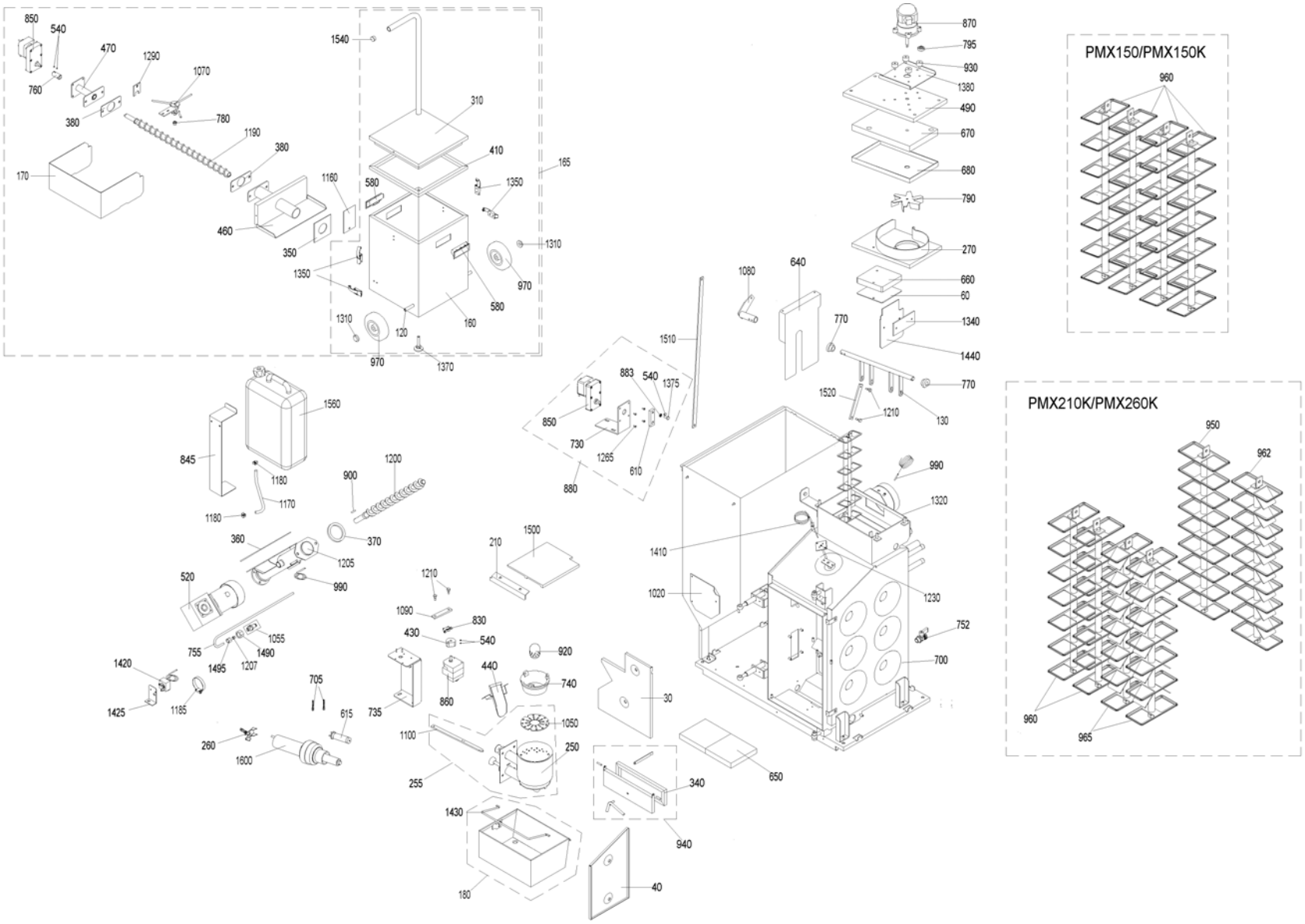
PMX150/PMX150K
PMX210K/PMX260K

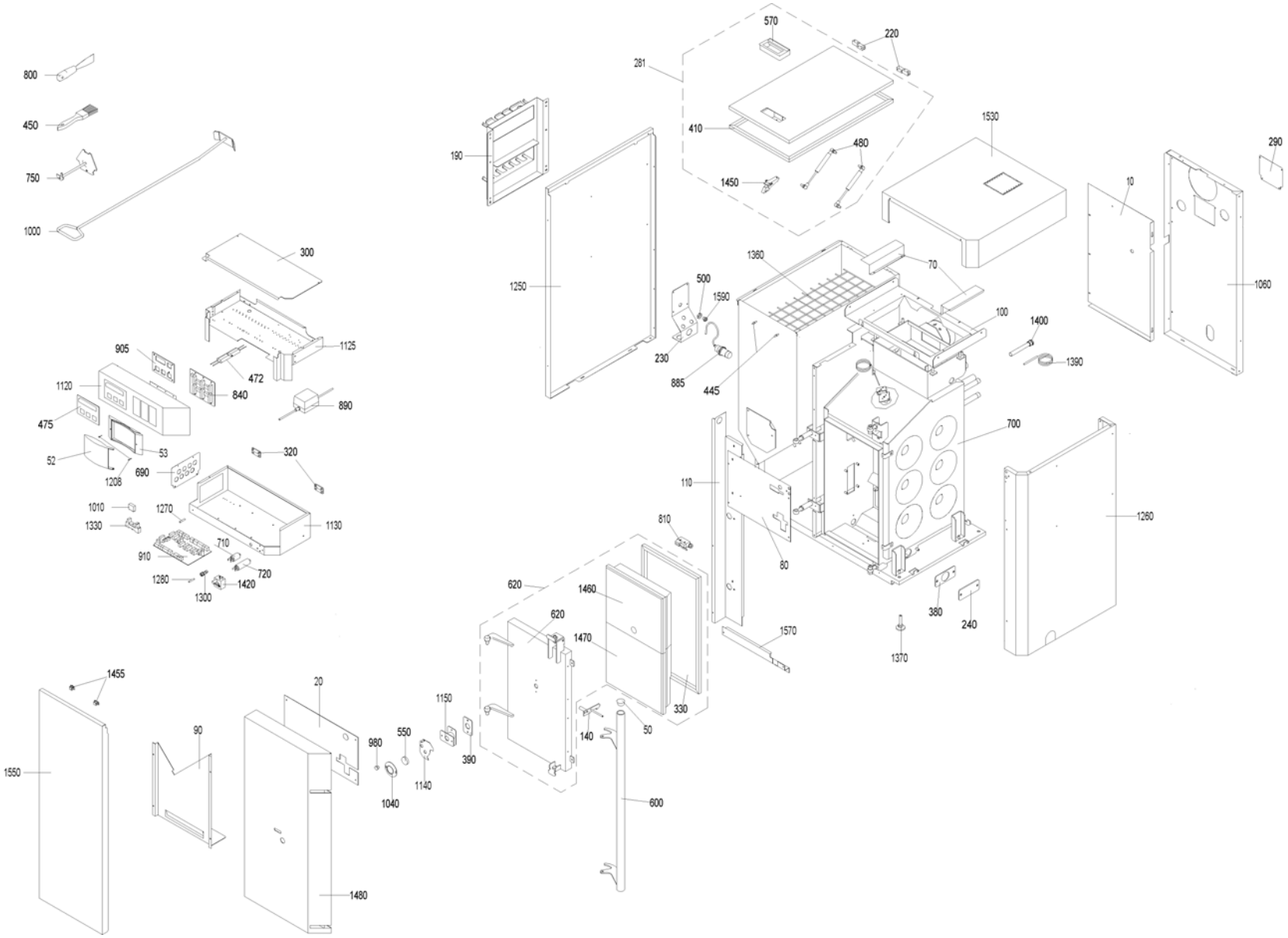
800
450
750
1000
300
1125
905
472
840
1120
890
475
53
52
1208
690
320
1010
1270
1130
1330
710
910
720
1280
1420
1300
1455
1550
90
20
980
550
1150
390
1140
1040
1480
570
220
281
410
480
1450
190
1250
1530
290
10
1060
1360
70
500
1590
100
1400
1390
230
885
445
700
110
1260
810
80
620
1460
620
1470
380
240
1570
1370
330
140
50
600

Item no.	Article no.	Description	Serialnumber from	Serialnumber t
10	040619	de: Abdeckblech Behälter hinten PMX	199903000	9999999999999
20	040714	de: Abdeckblech Heiztür PMX	199903000	9999999999999
30	041250	Rear cover plate for PMX, BioWIN10-26	199903000	9999999999999
40	041251	Right cover plate for PMX, BioWIN 10-26	199903000	9999999999999
50	004995	Cover for HMX, PMX, VestoWIN Premium 200-202, VestoWIN Klassik 170-220	199903000	9999999999999
52	009448	Cover MES	199903000	9999999999999
53	009446	Housing cover MES	199903000	9999999999999
60	042375	Cover for insulating stone/blower box for PMX 210/260, BioWIN 10-26	199903000	9999999999999
70	041538	de: Abdeckung Kabelschacht PMX	199903000	9999999999999
80	042013	de: Abdeckung für Kessel vorne PMX	199903000	9999999999999
90	042031	de: Abdeckung für Pelletsbehälter unten ab Los 3	199903000	9999999999999
100	040853	de: Abdeckung oben PMX	199903000	9999999999999
110	040699	de: Abdeckung vorne PMX Los 1+2	199903000	9999999999999
110	042587	de: Abdeckung vorne rot PMX ab Los3 PMX	199903000	9999999999999
120	041889	de: Achse Aschebehälterrad PMX	199903000	9999999999999
130	042372	de: Achse Heizflächenreinigung zu PMX210/260	199903000	9999999999999
140	041759	de: Anlüftsicherung PMX	199903000	9999999999999
160	042675	de: Aschebehälter kpl. PMX PMX	199903000	9999999999999
165	042675	de: Aschebehälter kpl. PMX PMX	199903000	9999999999999
170	041920	de: Ascheblech für Ascheaustragung PMX	199903000	9999999999999
190	040438	de: Aufhängeleiste Reinigungsgeräte HMX,PMX	199903000	9999999999999
210	041249	Support rail for baffle plate for PMX, BioWIN 10-26	199903000	9999999999999
220	044802	Southco hinge	199903000	9999999999999
230	041189	de: Blech Füllstandschalter PMX	199903000	9999999999999
240	041717	Blind flange for ash removal for PMX, BioWIN10-26 - Only BioWIN Klassik/Premium -	199903000	9999999999999
250	042712	de: Brenner kpl.mont.(inkl.Rostplatte ob.u.Rüttelh.) PMX210/260	199903000	9999999999999
255	042712	de: Brenner kpl.mont.(inkl.Rostplatte ob.u.Rüttelh.) PMX210/260	199903000	9999999999999
260	042713	de: Bügel Zündgebläse PMX	199903000	9999999999999
270	040895	Cover for coasting surface for BioWIN10-26, PMX	199903000	9999999999999
281	042123	de: PMX10 Deckel Vorratsbehälter PMX150 und PMX150K	199903000	9999999999999
290	041539	Cover for rear wall for PMX, BioWIN 10-26	199903000	9999999999999
300	040854	de: Deckel Schaltkasten PMX	199903000	9999999999999
310	041886	de: Deckel kpl. Aschebehälter PMX	199903000	9999999999999
320	000067	de: Deckelscharnier GMX	199903000	9999999999999
330	041150	de: Dichtschnur Heiztür PMX	199903000	9999999999999
340	041258	de: Dichtschnur Putzklappe PMX	199903000	9999999999999
350	006843	Ash conveyor seal Ø72x48,3x2mm PMX,BioWIN	199903000	9999999999999
360	006842	Auger tube/reserve supply container seal 178x178x3mm for PMX, BioWIN 10-26, BioWIN XL35-60	199903000	9999999999999
370	006841	Auger tube/boiler seal for PMX, BioWIN 10-26	199903000	9999999999999
380	006848	Seal AAT 120x56x2	199903000	9999999999999
390	006844	Seal inspection hole 80x50x3 mm PMX	199903000	9999999999999
410	051412	de: Dichtung Deckel Asche/-Pellets-Behälter u.Zuführung PMX (16x15x2050mm)	199903000	9999999999999
420	900099	de: Artikel ausgelaufen - nicht mehr lieferbar	199903000	9999999999999
425	042510	Burn-back protection completely assembled for PMX, BioWIN 10-26	199903000	9999999999999
430	006762	de: Exzenter Rostrüttelung, vz PMX	199903000	9999999999999
440	042106	Down chute for pellets for PMX210/260,BioWIN21-26	199903000	9999999999999
445	000191	KSL029 Forming screw, diameter 8x26/M5 for NBS,OEX,ASN,PMX,fittings cabinet Vesto 200, VarioWIN	199903000	9999999999999
450	017094	WERL056 Flat brush 1 1/2" NO. 72753 for FireWIN, VarioWIN, BioWIN10-26, BioWIN XL 35-60	199903000	9999999999999
460	041715	de: Flansch Aschebehälter PMX	199903000	9999999999999
470	041710	de: Flansch Motor (Ascheaustragung) PMX	199903000	9999999999999
472	006923	de: Funkentstörfilter F011-162/012 PMX	199903000	9999999999999

Item no.	Article no.	Description	Serialnumber from	Serialnumber t
475	006837	BDM plate HMX/PMX	199903000	9999999999999
480	012600	Gas spring 4534DS 0100 N	199903000	9999999999999
490	040882	Blower cover for PMX, BioWIN 10-26	199903000	9999999999999
500	006339	de: Gegenmutter 209 MS NI	199903000	9999999999999
520	044664	Geared motor for auger 7,8 RPM, pluggable conversion instructions for use are enclosed by PMX21/26 for BioWIN 21/26, BioWIN XL 35-	199903000	9999999999999
530	900099	de: Artikel ausgelaufen - nicht mehr lieferbar	199903000	9999999999999
540	033098	de: Gewindestift M4x6 DIN 916 schwarz HMX,PMX	199903000	9999999999999
550	000307	de: Glasscheibe BOROFLOAT Ø 45/4 mm) GWX,FAX,GKW,HMX	199903000	9999999999999
570	009543	de: Griffmulde P1-30 PMX	199903000	9999999999999
580	009544	de: Griffmulde HMX,PMX,OKB,GSX	199903000	9999999999999
590	900099	de: Artikel ausgelaufen - nicht mehr lieferbar	199903000	9999999999999
600	041149	de: Handgriff Heiztür PMX	199903000	9999999999999
610	041605	de: Hebel unten Heizflächenreinigung PMX bis Los30	199903000	9999999999999
610	041735	de: Hebel unten Heizflächenreinigung PMX ab Los31	199903000	9999999999999
615	006819	de: Heizelement 230V/1550W Zündgerät (Triac S Eco) PMX	199903000	9999999999999
615	010950	de: Heizelement 230V/1550W Zündgerät (Igniter) PMX	199903000	9999999999999
620	042947	de: Heiztür kpl. PMX	199903000	9999999999999
640	041537	de: Isolierblech Heizflächenreinigung PMX	199903000	9999999999999
650	006917	Insulating stone for rear floor 225 x 155 x 25 for PMX21/26, BioWIN 10-26 (Only BioWIN Klassik/Premium)	199903000	9999999999999
660	006916	Blower box insulating stone 190 x 139 x 25 SN450 for PMX21/26,BioWIN10-26	199903000	9999999999999
670	006770	Insulation for blower cover RBP-9 (313x194x30) for PMX, BioWIN10-26	199903000	9999999999999
680	040887	Insulation support for blower cover for PMX, BioWIN 10-26	199903000	9999999999999
685	051685	de: Kabel zu Leistergebläse PMX	199903000	9999999999999
690	040618	de: Kabelführung Schaltkasten PMX	199903000	9999999999999
700	042360	de: kiotel Lager-re-hi Alu	199903000	9999999999999
702	004385	KFE cock	199903000	9999999999999
705	045077	de: Kohlebürstenset (2Stk.) Zündgerät (Triac u. Igniter) PMX	199903000	9999999999999
710	007330	Condenser for motor MAB 500V, 3µF for HMX,PMX,SWK,BioWIN10-26,FireWIN,VarioWIN,BioWIN XL 35-60, EasyWIN Premium 180,LogWIN Premiu	199903000	9999999999999
720	007334	Capacitor 8µF for auger motor, MAB MKP8 for PMX21/26, BioWIN 21/26, BioWIN XL 35-60	199903000	9999999999999
730	041603	de: Konsole Motor (Heizflächenreinigung) PMX bis Los30	199903000	9999999999999
730	041737	de: Konsole Motor Heizflächenreinigung PMX ab Los 31	199903000	9999999999999
735	042104	de: Konsole für Rüttelmotor PMX210/260	199903000	9999999999999
740	006911	Cone top part/cone for PMX 21/26, BioWIN21/26	199903000	9999999999999
750	042421	de: Konusheber PMX210/260,BioWIN210/260 bis Los 29	199903000	9999999999999
752	004385	KFE cock	199903000	9999999999999
755	042091	de: Kupferleitung Rückbrandsicherung PMX	199903000	9999999999999
760	006749	de: Kupplung Ascheaustragung PMX	199903000	9999999999999
770	006758	Bearing for heating surface cleaning for PMX, BioWIN 10-26	199903000	9999999999999
780	006745	Ash conveyor bearing bush	199903000	9999999999999
790	043892	Blower wheel Ø150mm for BioWIN 21/26	199903000	9999999999999
795	007304	Magnet, complete, glued for motor for PMX, HMX from lot 24, BioWIN 10-26	199903000	9999999999999
800	009540	Spatula	199903000	9999999999999
810	005141	Microswitch Z-15GW4-B for heating door for FAX,HMX,PMX, SilvaWIN, FireWIN	199903000	9999999999999
830	009277	Air control microswitch	199903000	9999999999999
840	041429	de: Platine MES Module m.Litzen gelötet PMX,HMX	199903000	9999999999999
845	042090	de: Montagewinkel Wasserbehälter PMX	199903000	9999999999999
850	044665	Motor	199903000	9999999999999
860	006812	de: Motor Ascherüttelung PMX	199903000	9999999999999
870	044666	Motor for blower, ET new Conversion instructions for use with PMX 15-26 are enclosed! for BioWIN 10-26	199903000	9999999999999
880	006814	de: Austauschmotor Heizflächenreinigung PMX bis Los30	199903000	9999999999999
880	006814	de: Austauschmotor Heizflächenreinigung PMX bis Los30	199903000	9999999999999

Item no.	Article no.	Description	Serialnumber from	Serialnumber t
880	044665	Motor	199903000	9999999999999
883	016659	Hexagon nut M8 DIN434	199903000	9999999999999
885	006821	Proximity switch, capacitive	199903000	9999999999999
890	051645	Power supply unit 12V	199903000	9999999999999
900	006766	Feather key, without tightening DIN6885 A 6x6x28 mm for PMX, BioWIN10-26, FireWIN, VarioWIN, BioWIN XL 35-60	199903000	9999999999999
905	006804	de: Platine Bedienmodul inkl.Flachbandkabel PMX,HMX ab Los13/00	199903000	9999999999999
910	006800	de: Platine Feuerungsmodul PMX	199903000	9999999999999
920	047774	Primary air pin for BioWIN10-26 FireWIN bis Los9 und PMX 21-26	199903000	9999999999999
930	009283	de: Puffer (SM 20292 a B d25/h15 M6 65° Shore) Motor HMX,PMX	199903000	9999999999999
940	042015	de: Putzklappe kpl. PMX	199903000	9999999999999
950	042715	Clearer flat, complete rear downdraft for PMX21/26, BioWIN 21/26	199903000	9999999999999
960	042016	Clearer flat, complete for PMX, BioWIN 10-26	199903000	9999999999999
962	042716	Clearer flat, complete rear updraft for PMX21/26, BioWIN21/26	199903000	9999999999999
965	042717	Clearer flat, complete front updraft for PMX 21/26, BioWIN21/26	199903000	9999999999999
970	006888	Wheel AG 125-12	199903000	9999999999999
980	007638	de: Rändelmutter GN 530 M5 SW	199903000	9999999999999
990	006820	MES007 Immersion sensor (exhaust gas sensor) Pt 1000 for PMX, FireWIN, VarioWIN, BioWIN 10-26, BioWIN XL 35-60	199903000	9999999999999
1000	040328	Cleaning rake for HMX,PMX, EasyWIN Klassik/Premium 180, LogWIN Premium 180-505	199903000	9999999999999
1010	005026	OKE9281 Cable protection plate	199903000	9999999999999
1020	042014	de: Revisionsdeckel Pelletsbehälter kpl.	199903000	9999999999999
1030	042713	de: Bügel Zündgebläse PMX	199903000	9999999999999
1040	087300	de: Rosette für Schauglas für GKW,FAX,PMX,HMX GKW871	199903000	9999999999999
1050	006912	Grate plate, top PMX210/260	199903000	9999999999999
1055	042510	Burn-back protection completely assembled for PMX, BioWIN 10-26	199903000	9999999999999
1060	042711	de: Rückwand kpl. PMX210/260	199903000	9999999999999
1070	041705	de: Rührwerk PMX	199903000	9999999999999
1080	041014	de: Rüttelarm Heizflächenreinigung PMX	199903000	9999999999999
1090	042536	Shaker lever 1 PMX 21/26, BioWIN 10-26, FireWIN	199903000	9999999999999
1100	042103	Shaker lever 2 PMX21/26,BioWIN10-26	199903000	9999999999999
1120	042964	de: Schalterblende schwarz PMX	199903000	9999999999999
1125	040771	de: Schaltkasten Oberteil PMX	199903000	9999999999999
1130	040769	de: Schaltkasten Unterteil PMX	199903000	9999999999999
1140	041248	de: Schaulochabdeckung PMX	199903000	9999999999999
1150	041245	de: Schaulochflansch PMX	199903000	9999999999999
1160	041888	de: Schieber Aschebehälter PMX	199903000	9999999999999
1170	008915	Hose 7x2	199903000	9999999999999
1180	006874	Hose clip ABA 11	199903000	9999999999999
1185	006905	Hose clip 50-70/9 C71 for PMX, BioWIN 10-26	199903000	9999999999999
1190	041712	de: Schnecke Ascheaustragung PMX	199903000	9999999999999
1200	041139	Auger, complete for pellets for PMX, BioWIN 10-26	199903000	9999999999999
1205	042679	Sealed auger tube, new ET for PMX, BioWIN 10-26	199903000	9999999999999
1207	006378	Cutting ring DL8 07-151	199903000	9999999999999
1208	019836	Cylinder screw 2.9x16 (not illustrated)	199903000	9999999999999
1210	045076	Screw M6 (with U-washer and nut) for heating surface cleaning complete for PMX, BioWIN10-26, FireWIN, VarioWIN	199903000	9999999999999
1230	081761	de: Schutzrohr für Fühler für HMX,PMX	199903000	9999999999999
1250	042011	de: Seitenwand links für PMX	199903000	9999999999999
1260	042589	de: Seitenwand rechts rot PMX PMX	199903000	9999999999999
1265	031097	de: Senkschraube M5x10, DIN 965, schwarz chrom., m. KS	199903000	9999999999999
1270	006900	Fuse 1 A T 5x20 ceramic tube	199903000	9999999999999
1280	003228	6.3A fuse (not illustrated)	199903000	9999999999999
1290	041716	de: Sicherungsblech Schnecke PMX	199903000	9999999999999

Item no.	Article no.	Description	Serialnumber from	Serialnumber t
1300	003663	Fuse holder	199903000	9999999999999
1310	006889	Washer Ø12	199903000	9999999999999
1320	046056	de: U-Profildichtung Silikon 6x7,5x1300mm PMX,HMX	199903000	9999999999999
1330	005043	Base for relay	199903000	9999999999999
1340	042369	Clamping plate for PMX21/26, BioWIN 10-26	199903000	9999999999999
1350	009546	Spring lock	199903000	9999999999999
1360	006839	de: Stahlgitter vz, 608 x 337 mm, MW 50/50/4 mm PMX	199903000	9999999999999
1370	009990	Leg M10 x 40	199903000	9999999999999
1375	016721	Hexagon screw M8x16 DIN 933	199903000	9999999999999
1380	042387	de: Strahlschutzblech für PMX	199903000	9999999999999
1390	502186	MES009M Immersion sensor	199903000	9999999999999
1400	005452	OK-915 Immersion sleeve (129 mm) No.55501.04 for EKX,OK/E,GWX,KSN,ZHN,OK-915,ETX,SNX,FKX,MIRA,FireWIN,VestoWIN Klassik 170-220,	199903000	9999999999999
1410	007626	Thermocouple	199903000	9999999999999
1420	046451	Safety thermostat LS1+100/-6, Auger for FireWIN, BioWIN 10-26, BioWIN XL 35-60	199903000	9999999999999
1425	042081	de: Thermostatkonsole Sicherheitsthermostat PMX	199903000	9999999999999
1440	042368	Partition plate for PMX21/26,BioWIN10-26	199903000	9999999999999
1450	061840	KSN022 Door catch for KSN,ZHN,PMX, VestoWIN Premium 200-202, VestoWIN Klassik 170-220	199903000	9999999999999
1455	000507	KSL022 Door catch GP3-78/444, No.300.223 for NBS,ASL/N,OEN/M/X,ZHL,KSL,PMX,OKN/M,OKE/S, fittings cabinet Vesto 200	199903000	9999999999999
1460	006792	de: Türstein oben 344x289x80 SF450 m.Schrauben (4x016719) PMX	199903000	9999999999999
1470	006793	de: Türstein unten 344x319x80 SF450 m.Schrauben (4x016719) PMX	199903000	9999999999999
1480	042010	de: Türverkleidung für PMX	199903000	9999999999999
1490	013749	Union nut 3/8"	199903000	9999999999999
1495	006351	Union nut ML8 GV	199903000	9999999999999
1500	006850	Baffle plate for PMX, BioWIN 10-26	199903000	9999999999999
1510	041604	de: Verbindungsschiene Heizflächenreinigung PMX	199903000	9999999999999
1520	041004	de: Verbindungsstück Heizflächenreinigung PMX	199903000	9999999999999
1530	042590	de: Verkleidungsdeckel rechts rot PMX	199903000	9999999999999
1540	003263	de: Verschlußstopfen schwarz GPN 300 F14 KSN,ZHN,PMX	199903000	9999999999999
1550	042073	de: Vorderwand kpl.für PMX ab Los 3	199903000	9999999999999
1560	042064	de: Wasserbehälter kpl. PMX	199903000	9999999999999
1570	041528	de: Winkel Isolierung Kessel unten PMX	199903000	9999999999999
1590	006338	de: Dichtungsstopfen PG9 Füllstandschalter PMX	199903000	9999999999999
1600	051697	de: Zündgerät (Leister Gebläse) Umbausatz PMX ab SN:113000	199903000	9999999999999
1600	053852	de: Zündgerät inkl. Kabel beigelegt.	199903000	9999999999999

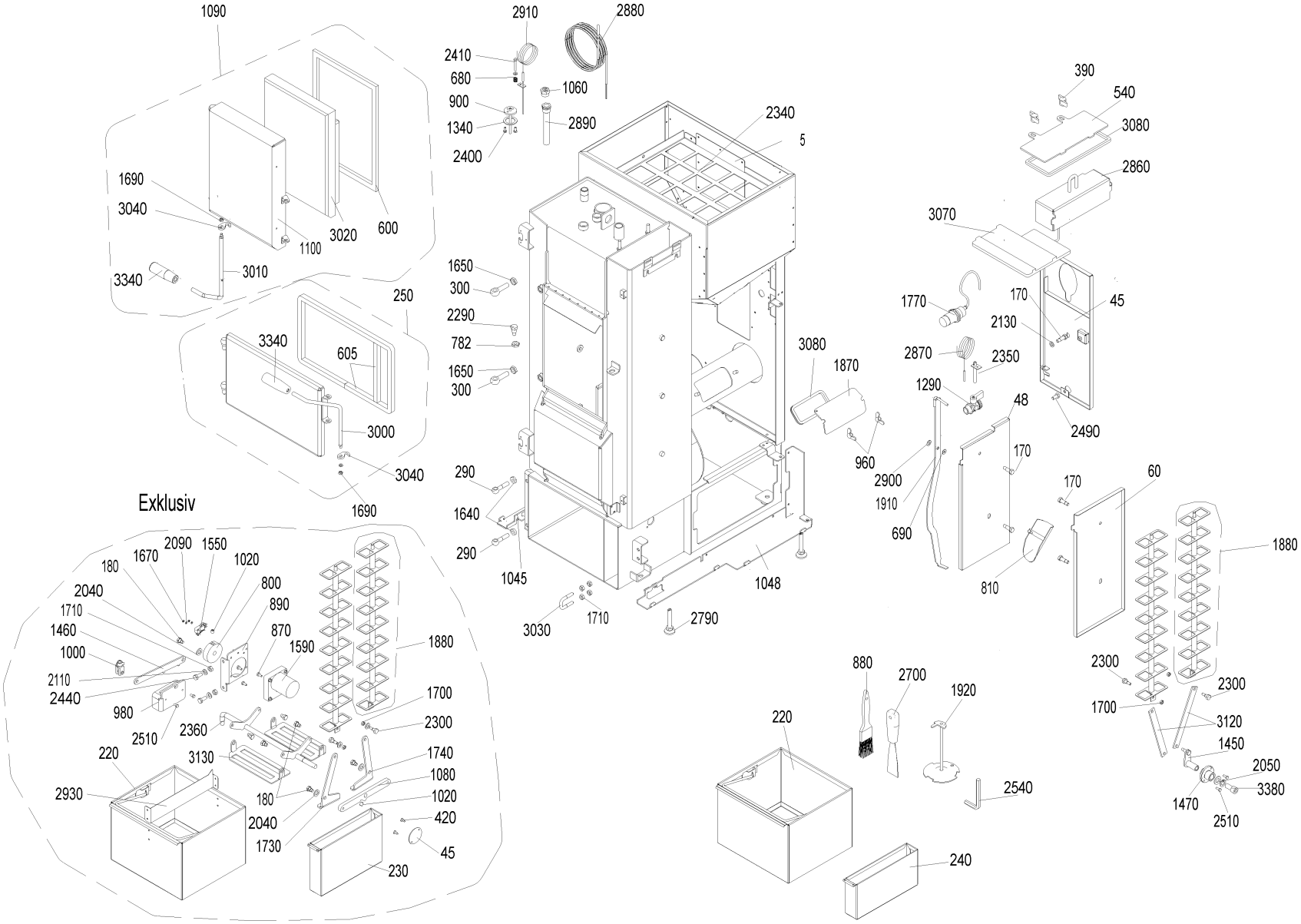
1090
1690
3040
3020
600
1100
3340
3010
250
3340
605
3000
3040
1690
Exklusiv
2090
1550
1670
1020
180
800
2040
890
1710
870
1460
1590
1000
1880
2110
1700
2440
2300
980
1740
2510
2360
1080
3130
1020
220
420
2930
180
45
2040
1730
230
2910
2880
2410
680
1060
900
2890
1340
2400
2340
5
1650
300
2290
782
1650
300
3080
1870
290
960
1640
290
1045
1048
3030
1710
2790
390
540
3080
2860
3070
1770
170
45
2130
2870
2350
1290
48
2490
2900
170
1910
690
810
170
60
1880
2300
2300
1700
3120
1450
2050
3380
1470
2510
880
2700
1920
220
2540
240

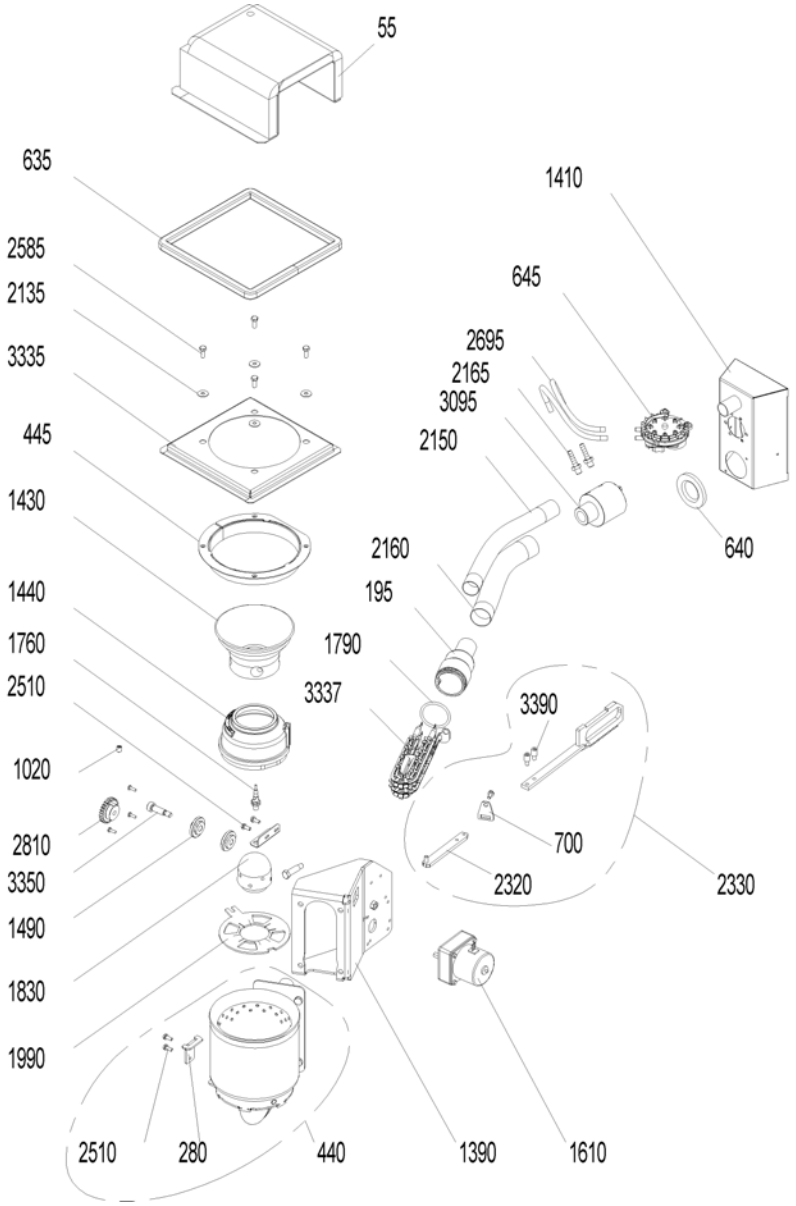
55
635
2585
2135
3335
445
1430
1440
1760
2510
1020
2810
3350
1490
1830
1990
2510
280
440
1390
1610
1410
645
2695
2165
3095
2150
2160
195
1790
3337
3390
700
2320
2330
640

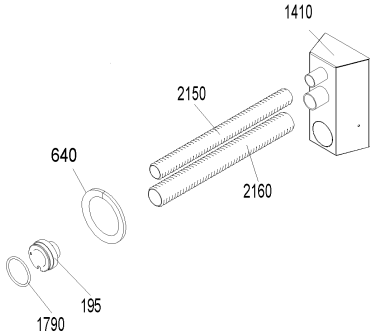
1410
2150
640
2160
195
1790

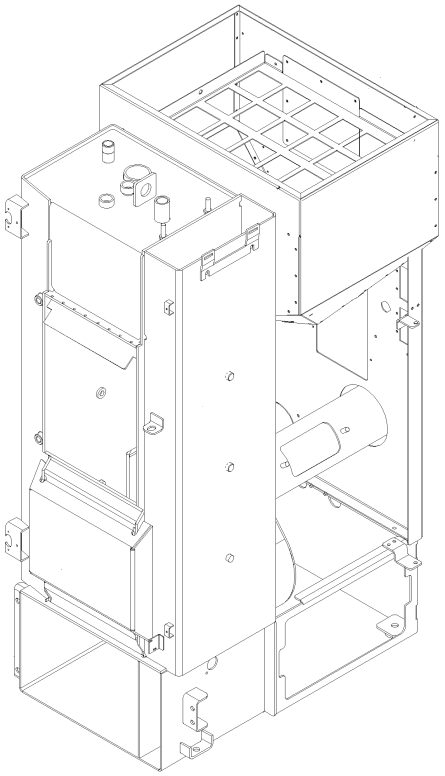

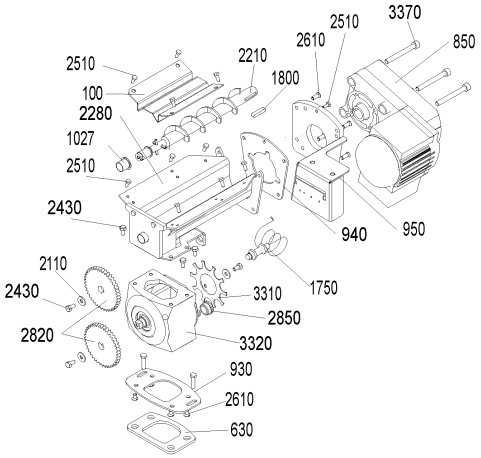
3370
2510
2610
850
2510
2210
1800
100
2280
1027
2510
2430
940
950
2110
2430
1750
3310
2850
2820
3320
930
2610
630

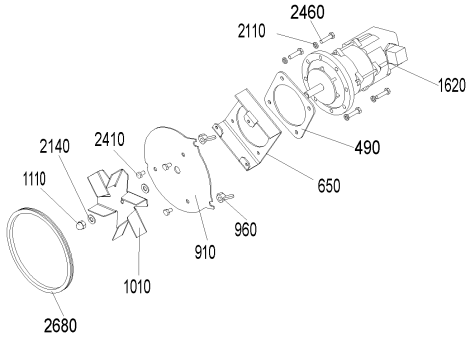
2460
2110
1620
490
2140
2410
650
1110
960
910
1010
2680

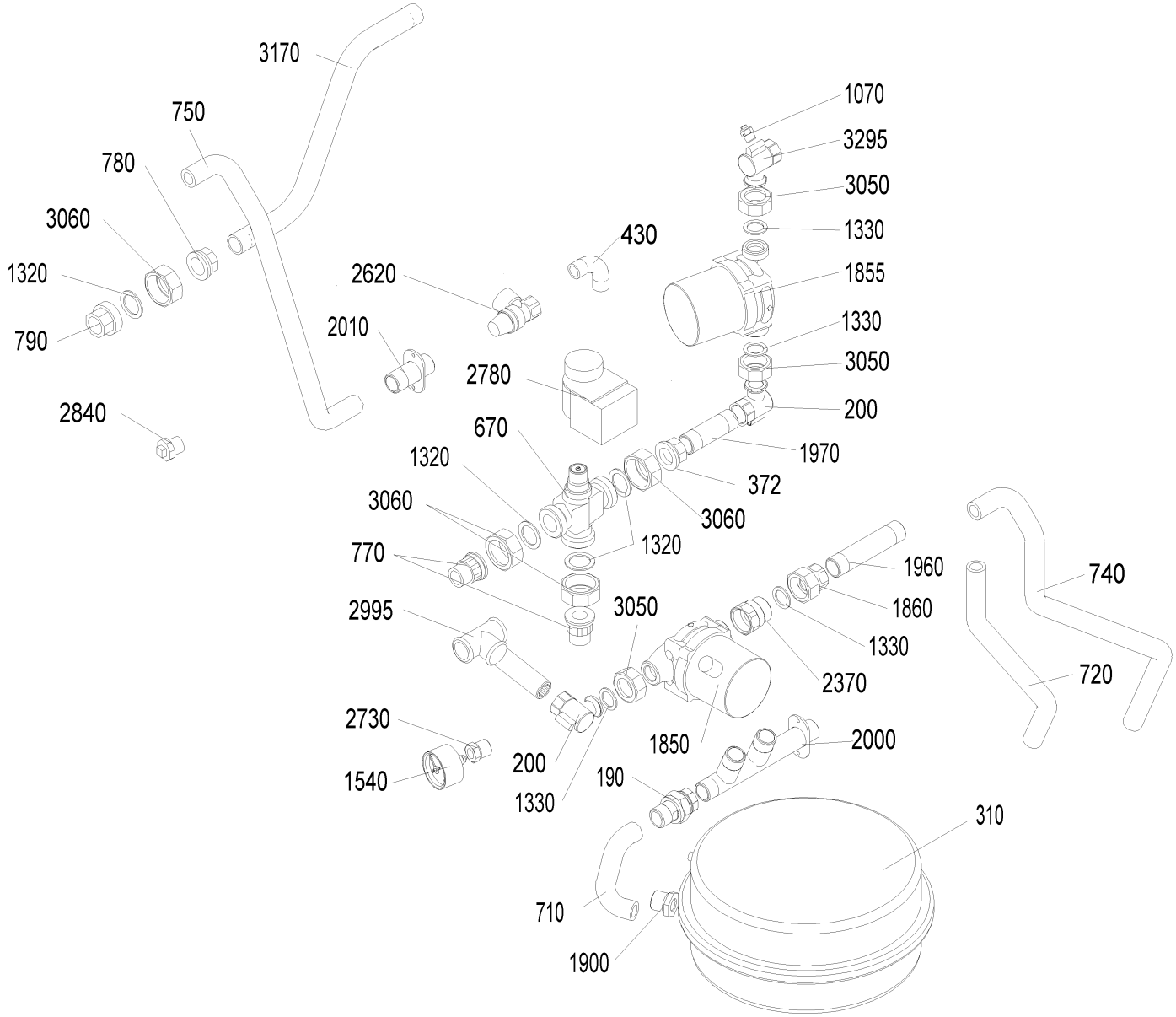
3170
750
780
3060
1320
790
2840
2620
2010
430
2780
670
1320
3060
770
2995
2730
1540
200
1330
1850
190
1070
3295
3050
1330
1855
1330
3050
200
1970
372
3060
1320
3050
1960
1860
1330
2370
2000
740
720
310
710
1900

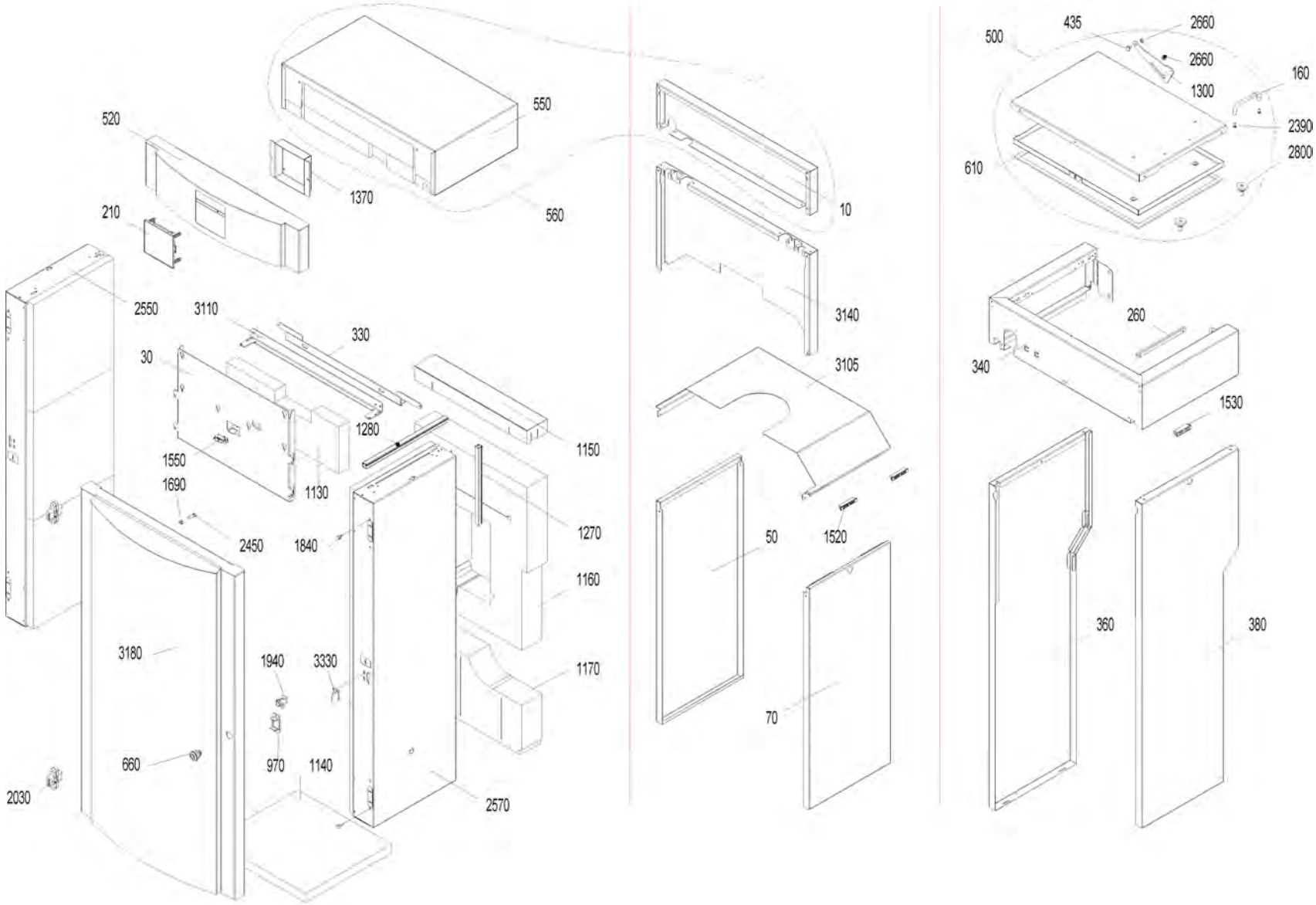
550
520
1370
560
210
2550
3110
330
30
1280
1150
1550
1690
1130
1270
2450
1840
1160
3180
1940
3330
1170
660
970
1140
2030
2570
10
3140
3105
50
1520
70
500
435
2660
2660
1300
160
2390
2800
610
260
340
1530
360
380

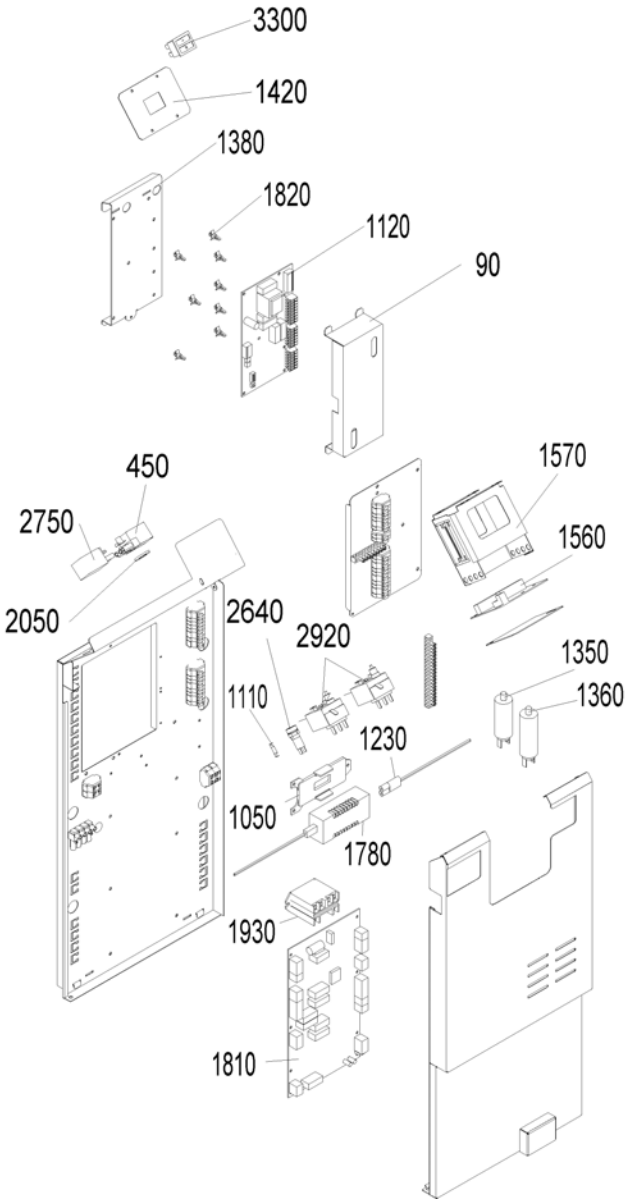
3300
1420
1380
1820
1120
90
450
2750
2050
2640
2920
1570
1560
1350
1360
1110
1230
1050
1780
1930
1810

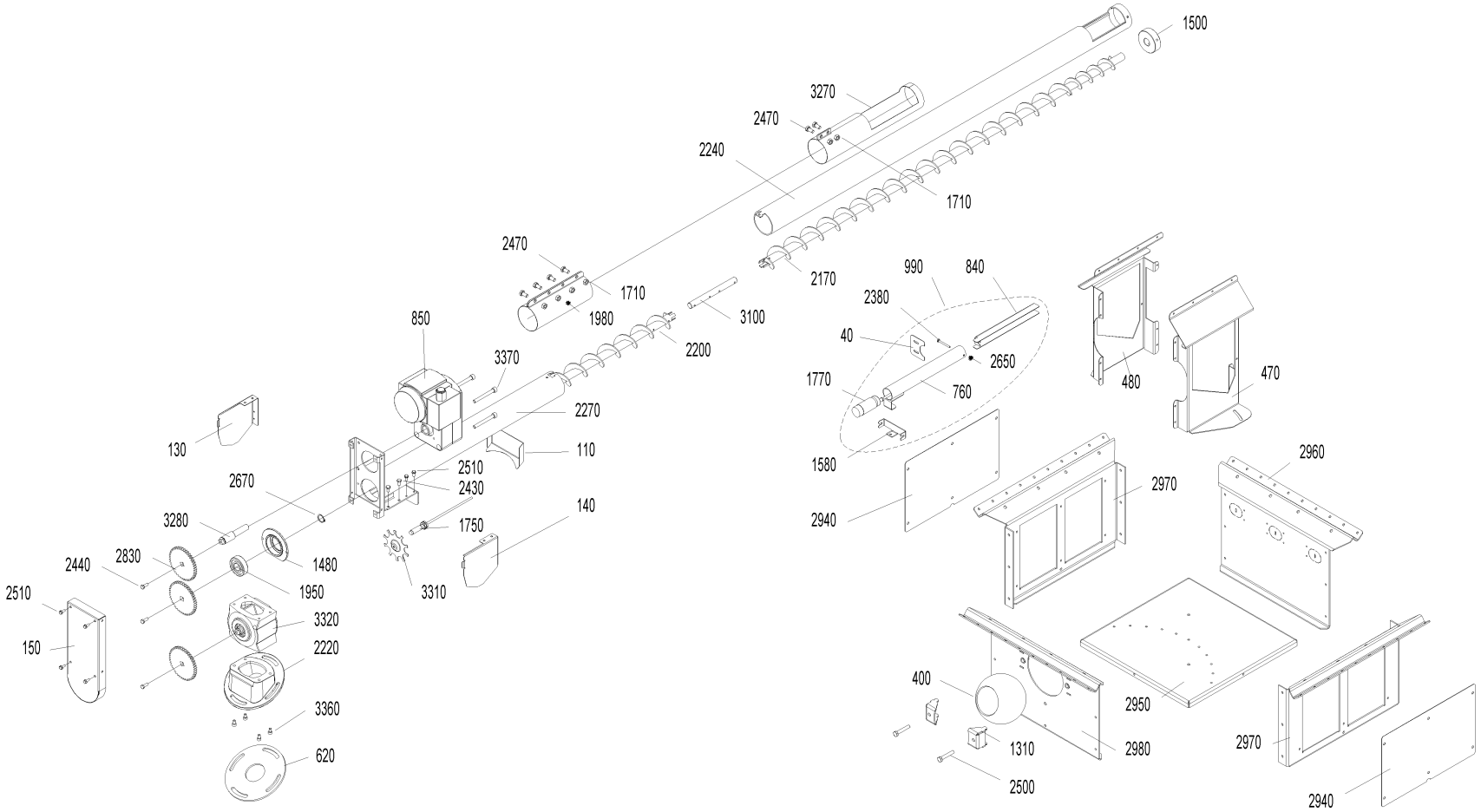
1500
3270
2470
2240
1710
2170
2470
1710
1980
2200
3100
850
3370
2270
110
130
2510
2430
2670
1750
140
3280
2830
2440
1480
1950
2510
3320
150
2220
3360
620
3310
990
840
2380
40
2650
1770
760
1580
2940
480
470
2960
2970
2950
2980
400
1310
2500
2970
2940

Item no.	Article no.	Description	Serialnumber from	Serialnumber t
5	044620	Tank cover plate for FireWIN, VarioWIN	0	9999999999999
10	046287	Rear cover plate, white for VarioWIN	0	9999999999999
10	046544	Rear cover plate, grey RAL7044 for VarioWIN	0	9999999999999
30	046281	Front cover plate for VarioWIN	0	9999999999999
40	046414	Cover, level indicator, funnel for VarioWIN	0	9999999999999
45	048733	Rear cover plate kpl. with isulation	0	9999999999999
48	048732	Cover plate left/right kpl. with isulation VAE/P60	0	9999999999999
50	046293	Left cover, white for VarioWIN	0	9999999999999
50	046547	Left cover, red for VarioWIN	0	9999999999999
55	048731	Top cover plate kpl. with isulation	0	9999999999999
60	048732	Cover plate left/right kpl. with isulation VAE/P60	0	9999999999999
70	046505	Right cover, red for VarioWIN	0	9999999999999
70	046506	Right cover, white for VarioWIN	0	9999999999999
90	051690	Cover BUML incl. Sticker	0	9999999999999
100	044376	Auger cover for VarioWIN, FireWIN	0	9999999999999
110	046419	Auger cover 30° for VarioWIN	0	9999999999999
110	046420	Auger cover 20° for VarioWIN	0	9999999999999
130	046298	Auger cover, left for VarioWIN	0	9999999999999
140	046418	Auger cover, right for VarioWIN	0	9999999999999
145	044518	Base cover for VarioWIN, FireWIN	0	9999999999999
150	046417	Gear cover for VarioWIN	0	9999999999999
160	000477	Aluminium handle for VarioWIN	0	9999999999999
170	013813	Collar screw	0	9999999999999
180	012502	Collar screw	0	9999999999999
190	012091	Connection coupling 3/4“ with Aqua-Stop for male thread for VarioWIN, FireWIN	0	9999999999999
195	007647	Connection piece, primary air for VarioWIN, FireWIN	0	9999999999999
200	012063	Connection bracket 1“-3/4“ for VarioWIN, FireWIN	0	9999999999999
210	011986	InfoWIN plus HW B4 SW V 4.10 VarioWIN and FireWIN from lot 0	0	9999999999999
220	047799	Ash pan left	0	9999999999999
230	047796	Ash pan left - coasting surfaces VarioWIN Exklusive 6kW	0	9999999999999
250	047792	Ash door, complete VarioWIN6	0	9999999999999
255	042743	Holder for cleaning equipments for VarioWIN, LogWIN Premium 180-505,SilvaWIN,BioWIN XL35-60,EasWIN Klassik/Premium 180	0	9999999999999
260	046410	Support, white for VarioWIN	0	9999999999999
260	046495	Support, grey for VarioWIN	0	9999999999999
280	045919	Driving rod seating bracket for VarioWIN, BioWIN 10-26 from batch 30, FireWIN	0	9999999999999
290	033432	Eyebolt similar to DIN 444 - B M10x50 - 4.6 - bright for VarioWIN, FireWIN, VestoWIN Premium 200-202, VestoWIN Klassik 170-220	0	9999999999999
300	033433	Eyebolt similar to DIN 444 - B M12x50 - 4.6 - bright for VarioWIN, FireWIN,EasyWIN Klassik/Premium 180,LogWIN Premium 180-505	0	9999999999999
310	003610	Expansion tank DXM 12 G3/8“ for FireWIN, VarioWIN	0	9999999999999
330	045766	Lower retaining bracket for VarioWIN	0	9999999999999
340	046402	Top container apron, white for VarioWIN	0	9999999999999
340	046483	Top container apron, grey for VarioWIN	0	9999999999999
360	046404	Bottom left container apron, white for VarioWIN	0	9999999999999
360	046487	Bottom left container apron, red for VarioWIN	0	9999999999999
380	046663	Bottom right container apron, red for VarioWIN	0	9999999999999
380	046664	Bottom right container apron, white for VarioWIN	0	9999999999999
390	019415	Wing nut DIN 315 - M8 - brass for FAX, FireWIN, VarioWIN, BioWIN 10, EasyWIN Premium 180	0	9999999999999
400	046283	Sheet metal ball for VarioWIN	0	9999999999999
410	019836	Cylinder screw 2.9x16 (not illustrated)	0	9999999999999
420	018139	Cylinder screw 4.2x13 DIN7981SP (not illustrated)	0	9999999999999
430	002519	Long bend - 1/2“ - No. 3 - black for VarioWIN, FireWIN, GKX	0	9999999999999
435	033091	Bolt DIN 1445 - 8h11 x 4 x 10 - St - galvanised for VarioWIN, FireWIN, BioWIN 10-26, BioWIN XL 35-60	0	9999999999999

Item no.	Article no.	Description	Serialnumber from	Serialnumber
440	046574	Burner for FireWIN from batch 10, VarioWIN - For VarioWIN the cover of the secondary-air-tube has to be removed! -	0	9999999999999
445	048734	Bride burner with seal	0	9999999999999
450	070324	Socket, 3-pin, black	0	9999999999999
460	009792	Socket, 4-pin, black for VarioWIN	0	9999999999999
470	046440	Auger roof sheeting, left for VarioWIN	0	9999999999999
480	046445	Auger roof sheeting, right for VarioWIN	0	9999999999999
490	031244	Blower motor damping mat material: S400-003 for FireWIN, VarioWIN	0	9999999999999
500	046503	Container cover, complete, grey for VarioWIN	0	9999999999999
500	046504	Container cover, complete, white for VarioWIN	0	9999999999999
520	046446	InfoWIN cover, white for VarioWIN	0	9999999999999
520	046540	InfoWIN cover, grey for VarioWIN	0	9999999999999
540	044477	heating surface cover for FireWIN, VarioWIN	0	9999999999999
550	046514	Top cover, white for VarioWIN	0	9999999999999
550	046515	Top cover, grey for VarioWIN	0	9999999999999
560	046666	Top cover with rear cover, white for VarioWIN	0	9999999999999
560	046667	Top cover with rear cover, grey for VarioWIN	0	9999999999999
590	044516	Rear wall cover for FireWIN, VarioWIN	0	9999999999999
600	045096	Heating door rope seal (glass fibre packing 16 x 10) for VarioWIN	0	9999999999999
605	046998	Ash door rope seal (glass fibre packing 16 x 16) for VarioWIN	0	9999999999999
610	046665	Container seal	0	9999999999999
620	031269	Downpipe seal 165 X 53 X 5 mm for Vario WIN	0	9999999999999
630	031241	Downpipe seal 115.5x73.7x5 for FireWIN, VarioWIN	0	9999999999999
635	046616	Glass fibre packing deflector plate burner 16x16x850 mm	0	9999999999999
640	044905	Seal section 461 0069 for FireWIN, VarioWIN	0	9999999999999
645	003362	de: Differenzdruckschalter Sicherheit VarioWIN 6kW	0	9999999999999
650	044490	Spacer plate for FireWIN, VarioWIN	0	9999999999999
660	012256	Turning bolt	0	9999999999999
670	012092	Three-way valve VXG 48.20 3/4" for FireWIN, VarioWIN	0	9999999999999
680	002453	Compression spring 1DXDA10, 3X20X6,5 female thread IG WST.1.4310 for FireWIN, VarioWIN	0	9999999999999
690	046171	Cleaning linkage pressure piece for FireWIN from batch 10, VarioWIN	0	9999999999999
700	046160	Driving rod feed-through for FireWIN from batch 10, VarioWIN	0	9999999999999
710	000214	Stainless steel corrugated tube, DN16x145 mm, 2 union nuts 3/4“, seals for VarioWIN, FireWIN	0	9999999999999
720	000139	Stainless steel corrugated tube, DN16x400 mm, 2 union nuts 3/4“, seals for VarioWIN	0	9999999999999
740	006213	Stainless steel corrugated tube, DN16x600 mm, 2 union nuts 3/4“, seals for VarioWIN, FireWIN	0	9999999999999
750	000140	Stainless steel corrugated tube, DN16x680 mm, 2 union nuts 3/4“, seals for VarioWIN, FireWIN	0	9999999999999
760	046269	Insertion tube for VarioWIN	0	9999999999999
770	044202	Insert 3/4“ - No. 371 - flat-turned for FireWIN, VarioWIN	0	9999999999999
780	011762	Insert 3/4“ - No. 372 - black for VarioWIN, FireWIN	0	9999999999999
782	033097	Nut (low) DIN 439 - B M12 - 04 - galvanised	0	9999999999999
790	000109	Screw-in part 3/4“ - No. 370 - black for VarioWIN, FireWIN	0	9999999999999
800	012504	Ash compactor eccentric disc for FireWIN, VarioWIN	0	9999999999999
810	046463	Down chute compl. VarioWIN	0	9999999999999
815	045038	Down channel for FireWIN, VarioWIN	0	9999999999999
820	000191	KSL029 Forming screw, diameter 8x26/M5 for NBS,OEX,ASN,PMX,fittings cabinet Vesto 200, VarioWIN	0	9999999999999
830	017029	Spring shackle for VarioWIN	0	9999999999999
840	045916	Proximity switch attachment for VarioWIN	0	9999999999999
850	007106	Gearmotor with connection cable, type: FGA 53 / 4DEKG 56 # for VarioWIN, FireWIN from batch 6, BioWIN XL 35-60	0	9999999999999
860	016780	Cylinder screw M4x12 DIN 7985	0	9999999999999
870	016950	Cyl. screw M5x12, galvanised, with cross slot, ISO 7045 (DIN 7985) for VarioWIN, FireWIN	0	9999999999999
880	017094	WERL056 Flat brush 1 1/2" NO. 72753 for FireWIN, VarioWIN, BioWIN10-26, BioWIN XL 35-60	0	9999999999999
890	045615	Ash compactor flange for FireWIN, VarioWIN	0	9999999999999

Item no.	Article no.	Description	Serialnumber from	Serialnumber t
900	051479	Sensor pipe flange FireWIN, VarioWIN	0	9999999999999
910	044489	Blower flange for FireWIN, VarioWIN	0	9999999999999
920	044372	Auger flange for FireWIN, VarioWIN	0	9999999999999
930	044487	Rotary feeder flange for FireWIN, VarioWIN	0	9999999999999
940	031243	Auger motor flange seal (S400-003) for FireWIN, VarioWIN	0	9999999999999
950	045986	Auger motor flange plate for FireWIN from batch 6, VarioWIN	0	9999999999999
960	019415	Wing nut DIN 315 - M8 - brass for FAX, FireWIN, VarioWIN, BioWIN 10, EasyWIN Premium 180	0	9999999999999
970	046473	Guide plate for VarioWIN	0	9999999999999
980	045614	Ash compactor guide plate for FireWIN, VarioWIN	0	9999999999999
990	046270	Sheet steel tank fill level switch for VarioWIN	0	9999999999999
1000	012501	Fork head M8xL1 16mm / L2 32mm for FireWIN, VarioWIN	0	9999999999999
1010	046471	Blower wheel for FireWIN from batch 10, VarioWIN	0	9999999999999
1020	033112	Setscrew M8x10 DIN916	0	9999999999999
1040	001438	Semicircular ring for corrugated tube 3/4“ for FireWIN, NBE, HMX, VarioWIN	0	9999999999999
1045	046262	Left retaining plate for VarioWIN	0	9999999999999
1048	046260	Right retaining plate for VarioWIN	0	9999999999999
1050	002050	Power supply unit 002049 holding plate for VarioWIN, FireWIN, BioWIN 10-26, BioWIN XL 35-60, LogWIN Premium 180-505	0	9999999999999
1060	004870	EKX901 Manually operated bleeder 1/2" with slotted screw for AccuWIN, AccuWIN Solar, VarioWIN, FireWIN	0	9999999999999
1070	001058	ASL001 Manually operated bleeder VFR 1/4“ for OE/KN/M,GKX,ASN,ASL,OEX, MIRA, fittings cabinet Vesto 200, VarioWIN, FireWIN	0	9999999999999
1080	045613	Coasting surface lever for NHF for ash compactor for FireWIN, VestoWIN, VarioWIN	0	9999999999999
1090	046565	Heating door complete for VarioWIN	0	9999999999999
1100	044979	Heating door for VarioWIN	0	9999999999999
1110	025967	Cap nut DIN 1587 - M8 - 6 - galvanised for FAX, FireWIN, VarioWIN, BioWIN 10-26, EasyWIN Klassik/Premium 180	0	9999999999999
1120	051541	Modification set BUML TTL to BUML TTL 2Z	0	9999999999999
1130	011139	Front cover plate insulation 40x157x440 for VarioWIN	0	9999999999999
1140	011138	Floor insulation 30x337x367 for VarioWIN	0	9999999999999
1150	011137	Top rear insulation 2 80x46x440 for VarioWIN	0	9999999999999
1160	011140	Top rear insulation 1 80x440x562,5 for VarioWIN	0	9999999999999
1170	011144	Bottom rear insulation 80x232x388 for VarioWIN	0	9999999999999
1180	044994	Insulating panel for VarioWIN	0	9999999999999
1190	044722	Cable for combustion chamber door X15 for FireWIN, VarioWIN	0	9999999999999
1200	000395	Three-way valve cable for FireWIN,GMX,MIRA,GENIO/MultiWIN,VarioWIN	0	9999999999999
1210	044730	Cable for shaker motor limit X14 switch for FireWIN, VarioWIN	0	9999999999999
1220	044729	Cable for ash compactor motor X7 for FireWIN, VarioWIN	0	9999999999999
1230	002051	Power supply unit cable FRIWO (primary power line) for VarioWIN, FireWIN, BioWIN 10-26, BioWIN XL 35-60, LogWIN Premium 180-505	0	9999999999999
1240	044727	Cable for shaker motor X5 for FireWIN, VarioWIN	0	9999999999999
1250	044728	Cable for ignition element X6 for FireWIN, VarioWIN	0	9999999999999
1255	053643	Cable - ignition element for BW1, BW2, FireWIN and VarioWIN	0	9999999999999
1260	009542	Cable feed-through	0	9999999999999
1270	046508	Rear cable duct 15x15x260 mm for VarioWIN	0	9999999999999
1280	046507	Top cable duct 15x15x320 mm for VarioWIN	0	9999999999999
1290	004385	KFE cock	0	9999999999999
1300	046415	Folding support for VarioWIN	0	9999999999999
1310	046433	Clamp for VarioWIN	0	9999999999999
1320	016179	Gasket 1“ 44 x 3 x 2 mm for VarioWIN, FireWIN	0	9999999999999
1330	016152	ZH 094 Klingerit seal 1/2" (30x21x2mm) for AccuWIN, AccuWIN Solar, VarioWIN, FireWIN	0	9999999999999
1340	003019	Seal flange combustion chamber sensor VarioWIN and FireWIN	0	9999999999999
1340	016160	Klingerit seal 3/4“ (38x27x2 mm) for VarioWIN, FireWIN	0	9999999999999
1350	007330	Condenser for motor MAB 500V, 3µF for HMX,PMX,SWK,BioWIN10-26,FireWIN,VarioWIN,BioWIN XL 35-60, EasyWIN Premium 180,LogWIN Premiu	0	9999999999999
1360	007332	Condenser 4µF for auger motor for PMX150,BioWIN10/15,FireWIN,VarioWIN, BioWIN XL 35-60	0	9999999999999
1365	045035	Down channel bracket for VarioWIN	0	9999999999999

Item no.	Article no.	Description	Serialnumber from	Serialnumber t
1370	046254	InfoWIN bracket for VarioWIN	0	9999999999999
1380	045761	BUML interface bracket for FireWIN, VarioWIN	0	9999999999999
1390	045215	Shake-out motor bracket for BioWIN 10-26 from batch 30, FireWIN from batch 10, VarioWIN	0	9999999999999
1400	045001	Mains power plug bracket for VarioWIN	0	9999999999999
1410	047809	Bracket compl. (independently of the room air) VarioWIN6	0	9999999999999
1420	044172	Rocker switch bracket for FireWIN, VarioWIN	0	9999999999999
1430	007324	Cone top part VarioWIN XS	0	9999999999999
1440	007322	Cone bottom part	0	9999999999999
1460	045619	Ash compactor bearing arm for FireWIN, VarioWIN	0	9999999999999
1480	007086	Bearing bush, diameter 92x17mm for VarioWIN, BioWIN XL 35-60	0	9999999999999
1490	007125	Bearing for vibrating drive	0	9999999999999
1500	007090	Auger bearing diameter 62.5x20 mm for VarioWIN	0	9999999999999
1510	002296	Long nipple 3/4“x60 mm, brass for VarioWIN, FireWIN	0	9999999999999
1520	001759	Magnetic lock No. 246.41 for GKW,NBE,GKX,GWX,GTX,PMX,HMX,FireWIN,VarioWIN, BioWIN 10-26	0	9999999999999
1530	001760	Magnetic lock, black - VW, LWP18-50, LWK	0	9999999999999
1540	001066	ASL002 Pressure gauge TYP101 Ø50 for OEX,OE/KN/M,GKW,ASN,ASL,GKX,GKA/E,MIRA,FireWIN,VarioWIN,fittings cabinet Vesto 200	0	9999999999999
1550	009277	Air control microswitch	0	9999999999999
1560	044572	Module connection PCB for FireWIN, VarioWIN	0	9999999999999
1570	041036	Module guide complete for FireWIN, VarioWIN	0	9999999999999
1580	046394	Proximity switch mounting bracket for VarioWIN	0	9999999999999
1590	046972	Ash compaction motor, coasting surface cleaning for FireWIN, VarioWIN	0	9999999999999
1610	012530	Grate shaking motor mounted replacement: 012517 for BioWIN10-26, FireWIN, VarioWIN	0	9999999999999
1620	044158	Blower motor with cable for blower for SilvaWIN, LogWIN, FireWIN, BioWIN XL 35-60, EasyWIN Premium 180, LogWIN Premium 180-505	0	9999999999999
1630	044944	Auger motor mounted replacement ET: 045907 for FireWIN, VarioWIN	0	9999999999999
1640	031156	Hexagon nut M10 DIN 439	0	9999999999999
1650	033097	Nut (low) DIN 439 - B M12 - 04 - galvanised	0	9999999999999
1660	016624	Nut DIN 934 - M12 - 8 - galvanised for VarioWIN, FireWIN, EasyWIN Klassik/Premium 180, LogWIN Premium 180-505	0	9999999999999
1670	016551	Hexagon nut M3 DIN 934	0	9999999999999
1680	016586	Hexagon nut M5 DIN 934	0	9999999999999
1690	016594	Hexagon nut M6 DIN 934	0	9999999999999
1700	016596	Nut DIN 934 - M6 - A2 for VarioWIN, FireWIN, BioWIN10-26, BioWIN XL 35-60	0	9999999999999
1710	015992	Nut M8 DIN 934 V2 - LogWIN Klassik pellet ready	0	9999999999999
1720	016565	Hexagon nut M5 with flange and gearing (not illustrated)	0	9999999999999
1730	045612	Ash compactor coasting surface plate, front for FireWIN, VarioWIN	0	9999999999999
1740	045611	Ash compactor coasting surface plate, rear for FireWIN, VarioWIN	0	9999999999999
1750	006832	Proximity switch M12, inductive	0	9999999999999
1760	009342	Proximity switch, inductive M8x1 for VarioWIN, FireWIN, BioWIN 10-26	0	9999999999999
1770	006821	Proximity switch, capacitive	0	9999999999999
1780	051645	Power supply unit 12V	0	9999999999999
1790	006849	O-ring FPM70 45 x 4	0	9999999999999
1800	006766	Feather key, without tightening DIN6885 A 6x6x28 mm for PMX, BioWIN10-26, FireWIN, VarioWIN, BioWIN XL 35-60	0	9999999999999
1810	011997	de: Platine FMP -V V6.50 VarioWIN	0	9999999999999
1820	007609	PCB holder	0	9999999999999
1830	007206	Primary air pin 6VW	0	9999999999999
1840	000299	Silicone buffer	0	9999999999999
1850	006399	HUPA pump 15-4.0 U130mm for AccuWIN, AccuWIN Solar, VarioWIN, FireWIN	0	9999999999999
1855	006419	Pump HEP 15-4.0 E 130 mm - Energy savings pump for FireWIN, VarioWIN	0	9999999999999
1860	012139	Pump screw connection DN3/4“-1“ - brass for FireWIN, VarioWIN	0	9999999999999
1870	044780	Exhaust pipe cleaning cover for FireWIN, VarioWIN	0	9999999999999
1880	044912	Clearer flat, complete for FireWIN, VarioWIN	0	9999999999999
1890	007655	Knurled nut with through-hole thread M5 SW for VarioWIN, FireWIN,BioWIN10-26	0	9999999999999

Item no.	Article no.	Description	Serialnumber from	Serialnumber t
1895	002023	Reduction nipple 1“-3/4“ for VarioWIN	0	9999999999999
1900	045025	Reduction nipple 3/8“-3/4“, turned for FireWIN, VarioWIN	0	9999999999999
1910	046158	Cleaning linkage, complete for FireWIN from batch 10, VarioWIN	0	9999999999999
1920	046570	Cleaning tool / removal device for cone for BioWIN 10 from batch30, VarioWIN	0	9999999999999
1930	005025	Power relay OMRON G7L-2A-BUB 200/240AC for PMX,BioWIN XL, BioWIN10-26,FireWIN,VarioWIN, BioWIN XL 35-60	0	9999999999999
1940	046474	Catch for panelling for VarioWIN	0	9999999999999
1950	012499	Grooved ball bearing	0	9999999999999
1960	045023	Hot water tank flow pipe 3/4“x118.5 mm - black for FireWIN, VarioWIN	0	9999999999999
1970	044198	Pipe for mixer group 3/4“x81.5 mm - black for FireWIN, VarioWIN	0	9999999999999
1980	046437	Pipe clamp,Ø 68x200 for VarioWIN	0	9999999999999
1990	045212	Grate plate, top for BioWIN 10/15 from batch 30, FireWIN from batch 10, VarioWIN	0	9999999999999
2000	044205	Return complete for FireWIN, VarioWIN	0	9999999999999
2010	044201	Return pipe for FireWIN, VarioWIN	0	9999999999999
2020	046282	Rear wall for VarioWIN	0	9999999999999
2030	007103	Cladding door hinge for LogWIN Premium 180-505, VarioWIN, BioWIN XL 35-60	0	9999999999999
2040	018058	U-washer	0	9999999999999
2050	017183	U-Washer DIN 125B - M12 - galvanised for VarioWIN, FireWIN, BioWIN XL 35-60	0	9999999999999
2060	024765	Washer DIN 125 - 5 - galvanised for VarioWIN	0	9999999999999
2070	024766	Washer DIN 125 - 6 - galvanised for VarioWIN	0	9999999999999
2080	024767	Washer DIN 125 - M8 - galvanised, ISO 7089 for VarioWIN, BioWIN 10-26, BioWIN XL 35-60, EasyWIN Premium 180	0	9999999999999
2090	021474	Disc 3 DIN134	0	9999999999999
2100	018309	Disc 5 DIN134	0	9999999999999
2110	020540	U-Washer DIN 134 - M6 - galvanised for VarioWIN, FireWIN	0	9999999999999
2120	018066	Washer DIN 134 - 8 - galvanised for VarioWIN	0	9999999999999
2130	024780	Disc 10 ISO7089	0	9999999999999
2135	031753	Disc 6 ISO 7093	0	9999999999999
2140	031755	Disc 8 ISO 7093	0	9999999999999
2150	016025	Silicone hose PU1, diameter 25x320, secondary air, independent of room air for FireWIN, VarioWIN	0	9999999999999
2160	016026	Silicone hose SG1M, diameter 32x330, primary air, independent of room air for FireWIN, VarioWIN	0	9999999999999
2165	010688	Hose sleeve 1/8"x 6 mm, Ms FireWin	0	9999999999999
2170	046239	Auger 1307 mm for VarioWIN	0	9999999999999
2170	046240	Auger 761 mm for VarioWIN	0	9999999999999
2170	046241	Auger 1853 mm for VarioWIN	0	9999999999999
2200	045093	Direct auger for VarioWIN	0	9999999999999
2210	044612	Daily use container auger for FireWIN, VarioWIN	0	9999999999999
2220	012520	Auger flange 30° pour VarioWIN	0	9999999999999
2220	012529	Auger flange 20° for VarioWIN	0	9999999999999
2240	046441	Auger tube 773,5 mm for VarioWIN	0	9999999999999
2240	046465	Auger tube 1320 mm for VarioWIN	0	9999999999999
2240	046466	Auger tube 1865 mm for VarioWIN	0	9999999999999
2270	045094	Direct auger tube for VarioWIN	0	9999999999999
2280	044896	Auger tube with friction bearing for daily use container, cpl., mounted for FireWIN, VarioWIN	0	9999999999999
2290	009219	Screw door handle bearing M12 (WAF17/30) - galvanised for HMX, BioWIN10-26, FireWIN, VarioWIN, EasyWIN Klassik/Premium 180	0	9999999999999
2300	045076	Screw M6 (with U-washer and nut) for heating surface cleaning complete for PMX, BioWIN10-26, FireWIN, VarioWIN	0	9999999999999
2320	045223	Inner driving rod for BioWIN 10-26 from batch 30, VarioWIN, FireWIN	0	9999999999999
2330	045232	Driving rod, complete for BioWIN10-26 à partir de lot 30 , FireWIn à partir de lot 10, VarioWIN	0	9999999999999
2340	046090	Container protective grille for VarioWIN	0	9999999999999
2350	041498	Protective tube for exhaust gas sensor	0	9999999999999
2360	047803	Swivel shaft complete 6VW	0	9999999999999
2370	012140	Gravity brake SBM 3/4“ G1 IG/AG for VarioWIN	0	9999999999999
2380	016752	Hexagon screw DIN 933 - M4x40 - 8.8 - galvanised for VarioWIN	0	9999999999999

Item no.	Article no.	Description	Serialnumber from	Serialnumber t
2390	016756	Hexagon screw M5x10 DIN 933	0	9999999999999
2400	017020	Hexagon screw Niro DIN 933 - M5x12 - A2 for HMX, FireWIN, VarioWIN	0	9999999999999
2410	015059	Hexagon screw DIN 933 - M5x35 - 8.8 - galvanised for VarioWIN, FireWIN	0	9999999999999
2420	015026	Hexagon screw DIN 933 - M6x10 - 8.8 - galvanised for VarioWIN, FireWIN	0	9999999999999
2430	017051	Hexagon screw M6x12 DIN 933 (not illustrated)	0	9999999999999
2440	024759	Hexagon screw DIN 933 - M6x16 - 8.8 - galvanised for VarioWIN	0	9999999999999
2450	015471	Hexagon screw M6x20 DIN 933	0	9999999999999
2460	015041	Hexagon screw DIN 933 - M6x25 - 8.8 - galvanised for VarioWIN, FireWIN	0	9999999999999
2470	015134	Hexagon screw M8x16 DIN 933	0	9999999999999
2480	017086	Hexagon screw M8x20 DIN 933 (not illustrated)	0	9999999999999
2490	017873	Hexagon screw DIN 933 - M8x20 - A2 for VarioWIN, FireWIN	0	9999999999999
2500	032654	Hexagon screw DIN 933 - M8x45 - 8.8 - galvanised for VarioWIN	0	9999999999999
2510	031545	Hexagon screw M5x12 DIN 7500 (not ilustrated)	0	9999999999999
2520	031549	Hexagon screw M6x12 DIN 7500	0	9999999999999
2530	017882	Thread-rolling hexagon screw DIN 7500 - M8x16 TT - galvanised for VarioWIN, EasyWIN Klassik/Premium 180	0	9999999999999
2540	027392	Hexagon pin key with T-handle 10x200 for VarioWIN, BioWIN XL 35-60	0	9999999999999
2550	046510	Left side panel, white for VarioWIN	0	9999999999999
2550	046511	Left side panel, red for VarioWIN	0	9999999999999
2570	046512	Right side panel, white for VarioWIN	0	9999999999999
2570	046513	Right side panel, red for VarioWIN	0	9999999999999
2585	024768	Hexagon screw M6x16, DIN 993 for BioWIN XL 35-60	0	9999999999999
2590	017222	Countersinking screw DIN 965 - M3x12 - galvanised with cross slot for VarioWIN, FireWIN, EasyWIN Klassik/Premium 180	0	9999999999999
2600	017223	Countersinking screw DIN 965 - M4x70 - galvanised with cross slot for VarioWIN, FireWIN	0	9999999999999
2610	016863	Countersinking screw M6x16	0	9999999999999
2620	001031	ASL004 Safety valve 1/2“ 2.5 bar for GWX,OEX,OE/KN/M,ASL,GKW,GTX,ASN,GKA/E,MIRA,FireWIN,Vesto Art.Nr.:49292, VarioWIN, fittings ca	0	9999999999999
2630	003228	6.3A fuse (not illustrated)	0	9999999999999
2640	003663	Fuse holder	0	9999999999999
2650	016724	Lock nut DIN 985 - M4 - galvanised for VarioWIN	0	9999999999999
2660	016732	Lock nut DIN 985 - M6 - galvanised for VarioWIN	0	9999999999999
2670	016171	Locking ring Ø20x1.2	0	9999999999999
2680	009231	Silicone U-section, black 6x7,5 replacement:046057 (FW) or 046056 (HMX,PMX) for HMX, PMX, FireWIN, VarioWIN	0	9999999999999
2690	016073	WERV013 Silicone seal, black 310ml	0	9999999999999
2695	016022	Silicone hose 5 x 8mm for FireWIN	0	9999999999999
2700	009540	Spatula	0	9999999999999
2710	018666	Clamping pin DIN 1481 - Ø4x20, for 3-way changeover unit for PMX, VarioWIN (* not illustrated), VestoWIN Premium 200-202, VestoWIN	0	9999999999999
2720	018184	Clamping pin DIN 1481 - Ø 5x14 for VarioWIN	0	9999999999999
2730	010286	ASL0021 Shut-off valve 1/4“ internal for pressure gauge R1/2“ for ASL/M,ÖR,SH,OEM,OEN,GTX,ASN,OEX,MIRA,FireWIN,fittings cabinet Ve	0	9999999999999
2740	005010	Steel collar 3/4“x50, black for VarioWIN, FireWIN	0	9999999999999
2750	070323	Plug, 3-pin, black	0	9999999999999
2760	070162	Plug, 4-pin, black for auger motor for VarioWIN, FireWIN	0	9999999999999
2770	070374	Plug, 7-pin (3-pin black, 4-pin brown) for blower motor for FireWIN, VarioWIN	0	9999999999999
2780	012240	Positioning drive SSY319 (230V, 50 Hz, 150s) for VarioWIN, FireWIN	0	9999999999999
2790	009992	Leg - JTB30 - M10x60 with slot for OEX, NBA, MIRA, VarioWIN, FireWIN	0	9999999999999
2800	009991	Leg - JTLO 38 - M8x16 for VarioWIN	0	9999999999999
2810	047115	Spur gear Z=28; m=1.5, for shake-out drive for FireWIN from batch 10, BioWIN 10/15 from batch 30, VarioWIN	0	9999999999999
2820	044613	Spur gear Z=32; m=2.5 for FireWIN from batch 6, VarioWIN - For units up to batch 5 009465 and 044612 must be replaced! -	0	9999999999999
2830	045771	Spur gear M2 Z45	0	9999999999999
2840	000353	KSN091 WAF Plug 1/2“ - no. 290 1- black No. 49304 for KSN, OEK, VestoWIN Klassik 170-220, FireWIN, VarioWIN	0	9999999999999
2850	012042	Plug 1/2“ MS, self-sealing, brass VER923 for VarioWIN, FireWIN	0	9999999999999
2860	044778	Jet protection plate, complete for FireWIN, VarioWIN	0	9999999999999
2870	006820	MES007 Immersion sensor (exhaust gas sensor) Pt 1000 for PMX, FireWIN, VarioWIN, BioWIN 10-26, BioWIN XL 35-60	0	9999999999999

Item no.	Article no.	Description	Serialnumber from	Serialnumber t
2880	502186	MES009M Immersion sensor	0	9999999999999
2890	000027	KSL332 Immersion sleeve 130 mm long for KSL/ZHL,GKA/E,fittings cabinet Vesto200, VarioWIN	0	9999999999999
2900	012536	Disc spring DIN2093 - 16x8.2x0.6 for VarioWIN, FireWIN	0	9999999999999
2910	007626	Thermocouple	0	9999999999999
2920	005672	Thermostat LS1+100-6U	0	9999999999999
2930	045623	Ash pan partition plate for FireWIN, VarioWIN	0	9999999999999
2940	046556	Funnel cover, left/right for VarioWIN	0	9999999999999
2950	039750	Funnel base for VarioWIN	0	9999999999999
2960	039754	Funnel side panel, rear for VarioWIN	0	9999999999999
2970	039752	Funnel side panel, right/left for VarioWIN	0	9999999999999
2980	039753	Funnel side panel, front for VarioWIN	0	9999999999999
2990	000092	T-piece 3/4“ - no. 130 - black for VarioWIN, FireWIN	0	9999999999999
2995	002024	T-piece, brass for FireWIN, VarioWINF	0	9999999999999
2997	003208	Grommet 10x17.5x1.2	0	9999999999999
3000	009553	Ash door handle rod for FireWIN, VarioWIN	0	9999999999999
3010	009549	Heating door handle rod for FireWIN, VarioWIN	0	9999999999999
3020	007083	Door stone for heating door for VarioWIN	0	9999999999999
3030	044588	Door locking bar for FireWIN, VarioWIN	0	9999999999999
3040	044591	Door locking latch for FireWIN, VarioWIN	0	9999999999999
3050	012052	Union nut 1/2“ - brass for VarioWIN, VestoWIN Klassik 170-220	0	9999999999999
3060	011770	Union nut 3/4“ - no. 374 - black WAX933 for VarioWIN, FireWIN	0	9999999999999
3080	006012	Silicone U-section, approx. 7x8.5 mm for VarioWIN, FireWIN, BioWIN 10-26	0	9999999999999
3090	000446	Valve insert for three-way valve 3/4“ from the VC-Serie, VCZZ6000B for VarioWIN, FireWIN	0	9999999999999
3095	012540	Venturi nozzle 6VW	0	9999999999999
3100	012528	Auger connector, Ø15.9, h10x165 mm for VarioWIN	0	9999999999999
3105	046285	Connecting plate, coated, white for VarioWIN	0	9999999999999
3105	046546	Connecting plate, coated, red for VarioWIN	0	9999999999999
3110	046279	Connecting plate, top for VarioWIN	0	9999999999999
3120	044782	Connecting piece HFR, coasting surface cleaning for FireWIN, VarioWIN	0	9999999999999
3130	047806	Compactor plate 6VW	0	9999999999999
3140	046290	Rear cladding, white for VarioWIN	0	9999999999999
3140	046545	Rear cladding, red for VarioWIN	0	9999999999999
3160	001306	Screw connection male thread D 1402, 3/4“x18 mm AG18 for FireWIN, VarioWIN	0	9999999999999
3170	007055	Flow pipe for FireWIN, VarioWIN	0	9999999999999
3180	046244	White panelling for VarioWIN	0	9999999999999
3180	046553	Red/grey panelling for VarioWIN	0	9999999999999
3200	009948	Wago terminal block 261; 2-pin WMS 1-2, 3-piece for VarioWIN, FireWIN	0	9999999999999
3210	006833	Wago terminal block 261; 4-pin "12V GND"	0	9999999999999
3220	006834	Wago terminal block 261; 4-pin "safety 1-4"	0	9999999999999
3230	009960	Wago terminal block 261; 8-pin 230V extnd. for VarioWIN, FireWIN, BioWIN10-26, BioWIN XL 35-60 (*not illustrated)	0	9999999999999
3240	009891	Wago terminal block 261; 11-pin safety 1-11 for FireWIN, VarioWIN	0	9999999999999
3250	009966	Wago terminal block 261; 11-pin orange extra-low voltage Extnd. for VarioWIN, FireWIN, BioWIN XL 35-60	0	9999999999999
3260	009968	Wago terminal block 261; 13-pin orange extra-low voltage (no. 1-13), for VarioWIN, FireWIN, BioWIN 10-26, BioWIN XL 35-60 (*not il	0	9999999999999
3270	046439	Maintenance pipe for VarioWIN	0	9999999999999
3280	012516	Shaft for motor, Ø = 20 h7x96.3mm for VarioWIN	0	9999999999999
3290	045216	Limit switch bracket for BioWIN 10-26 from batch 30, VarioWIN, FireWIN	0	9999999999999
3295	045024	Elbow adapter with G 14“ for VarioWIN	0	9999999999999
3300	005563	Rocker switch SW/GR 0-1	0	9999999999999
3310	044614	Toothed washer for FireWIN, BioWIN XL 35-60, VarioWIN	0	9999999999999
3320	009465	Rotary feeder for FireWIN from batch 6, VarioWIN	0	9999999999999
3330	046435	Centring plate for VarioWIN	0	9999999999999

Item no.	Article no.	Description	Serialnumber from	Serialnumber t
3335	046614	de: Schottblech Brenner VarioWIN 6	0	9999999999999
3337	053851	de: Zündelement inkl. Kabel beigelegt.	0	9999999999999
3337	055201	Ignition element BioWIN10-26, FireWIN from lot 15, VarioWIN from lot 15 BioWIN XL, LWK	0	9999999999999
3337	055202	Modifications set ignition	0	9999999999999
3340	009567	Cylindrical button 519-28-M10 for FireWIN, VarioWIN	0	9999999999999
3350	017048	Shoulder screw M8 10x25 ISO 7379	0	9999999999999
3360	033531	Cylinder-head screw, hexagon socket ISO 4762 - M6x10 - 8.8 - (DIN 912) for VarioWIN, BioWIN 10-26	0	9999999999999
3370	017049	Cylinder-head screw, hexagon socket ISO 4762 - M8x70 - 8.8 - galva. (DIN 912) for VarioWIN, FireWIN, BioWIN XL 35-60	0	9999999999999
3380	020117	Cylinder-head screw, hexagon socket ISO 4762 - M12x25 - 8.8 - galva. (DIN 912) for VarioWIN, FireWIN, BioWIN10-26, LogWIN Premium	0	9999999999999
3390	012537	Cylinder-head screw, hexagon socket M6x10, special version with tall head for VarioWIN, FireWIN	0	9999999999999

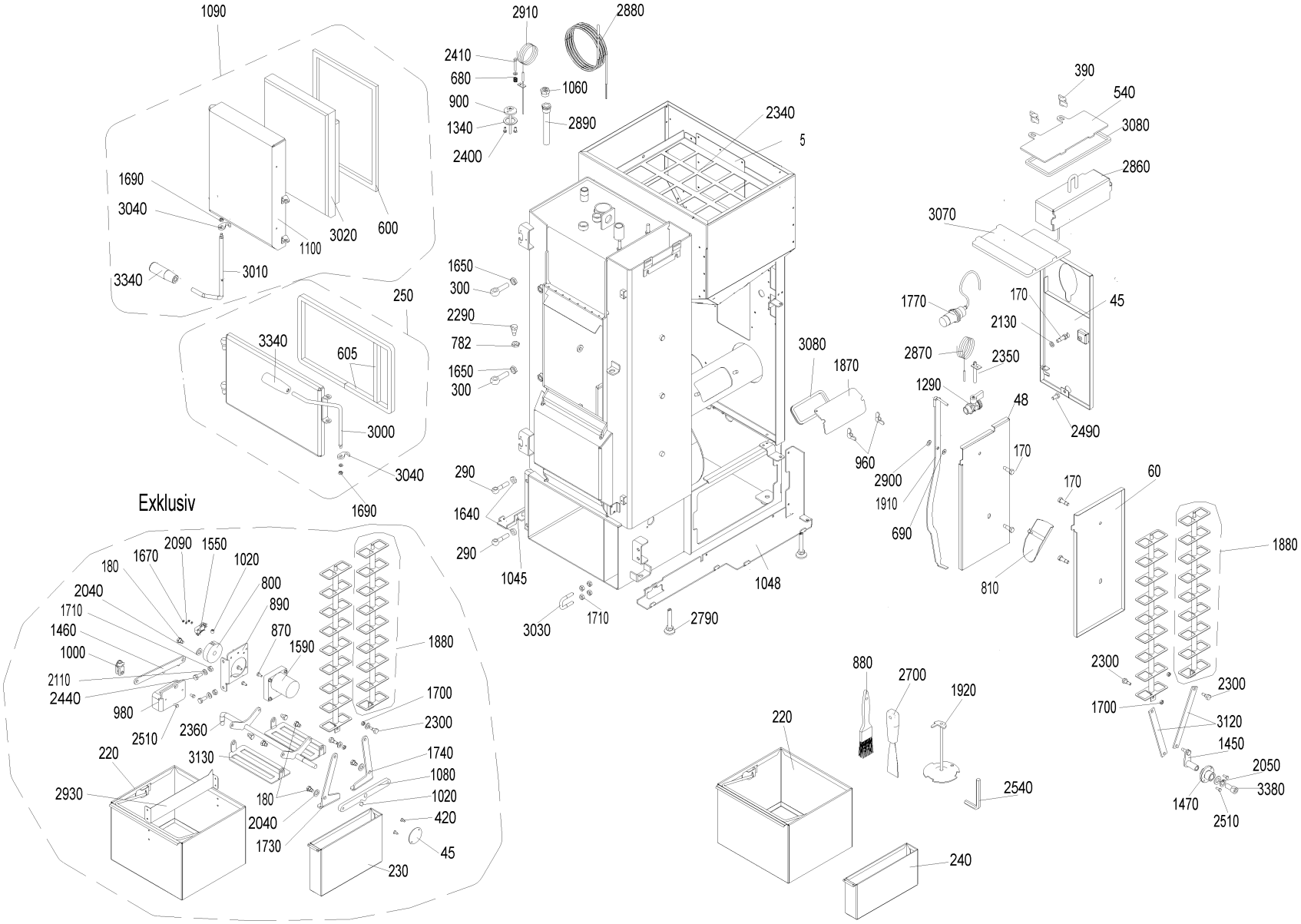
1090
1690
3040
3020
600
1100
3340
3010
250
3340
605
3000
3040
1690
Exklusiv
2090
1550
1670
1020
180
800
2040
890
1710
870
1460
1590
1000
1880
2110
1700
2440
2300
980
2510
2360
1740
220
3130
1080
2930
1020
180
420
2040
45
1730
230
2910
2880
2410
680
1060
900
2890
1340
2400
2340
5
1650
300
2290
782
1650
300
290
1640
290
1045
3030
1710
2790
1048
3080
1870
960
390
540
3080
2860
3070
1770
170
45
2130
2870
2350
1290
48
2490
2900
170
1910
690
810
170
60
1880
2300
2300
1700
3120
1450
2050
3380
1470
2510
880
2700
1920
220
2540
240

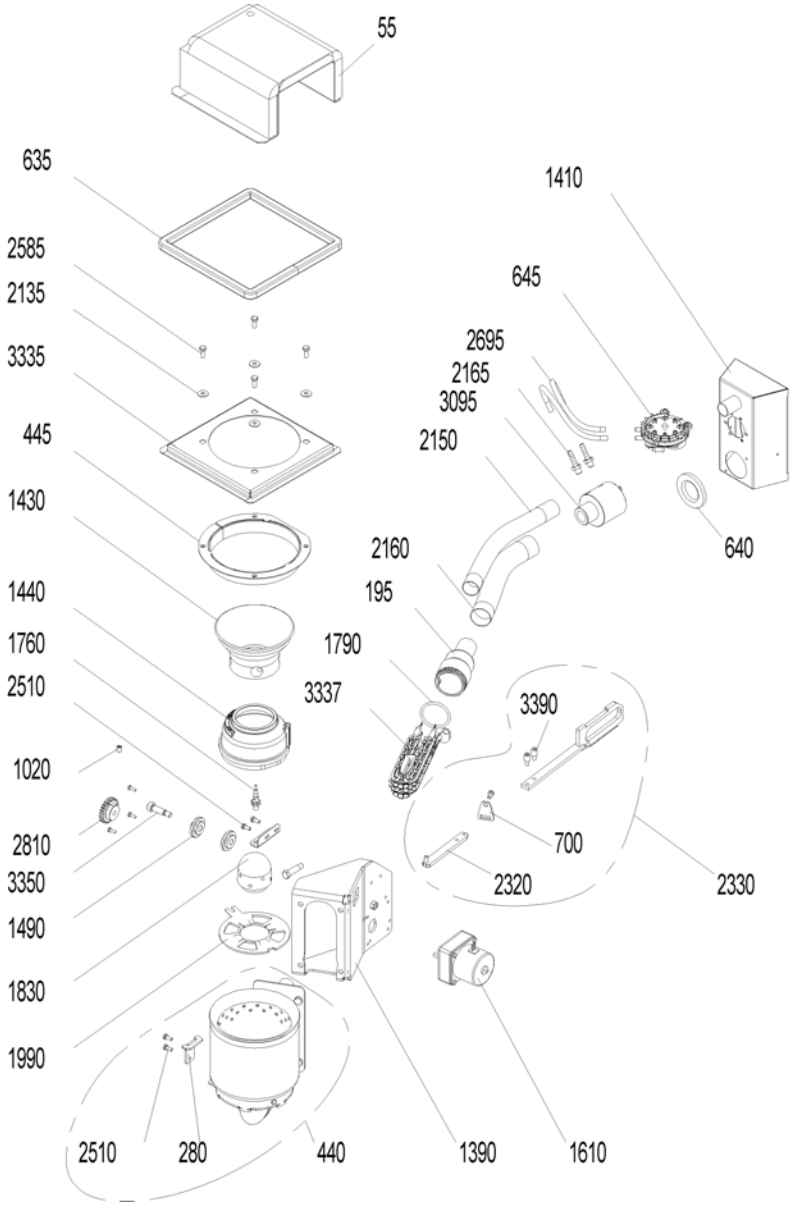
55
635
2585
2135
3335
445
1430
1440
1760
2510
1020
2810
3350
1490
1830
1990
2510
280
440
1390
1610
1410
645
2695
2165
3095
2150
2160
195
1790
3337
3390
700
2320
2330
640

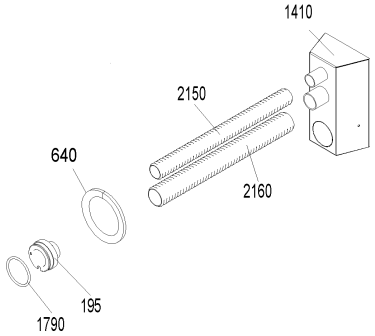
1410
2150
640
2160
195
1790

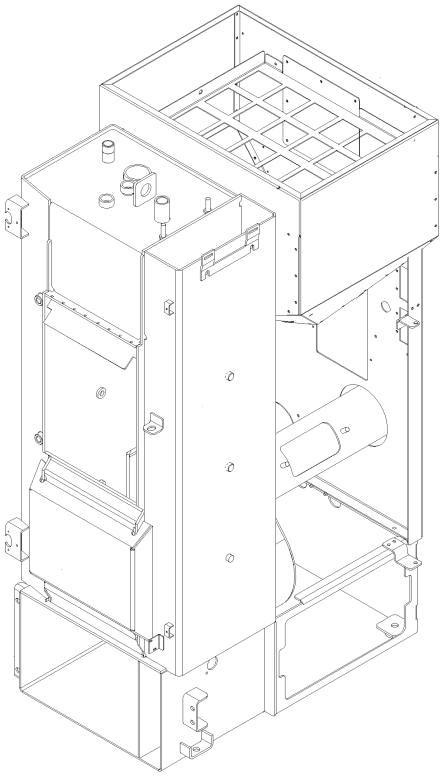

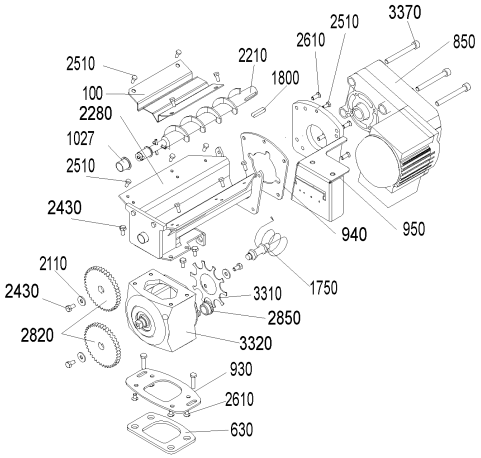
2510
3370
2610
850
2510
2210
1800
100
2280
1027
2510
2430
940
950
2110
2430
1750
3310
2850
2820
3320
930
2610
630

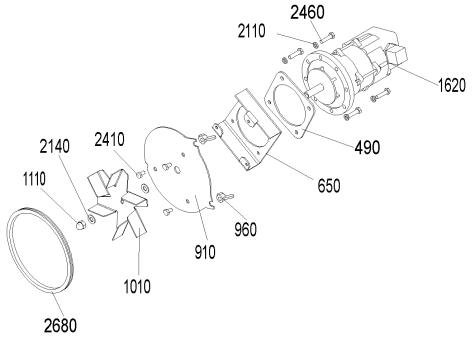
2460
2110
1620
490
2140
2410
650
1110
960
910
1010
2680

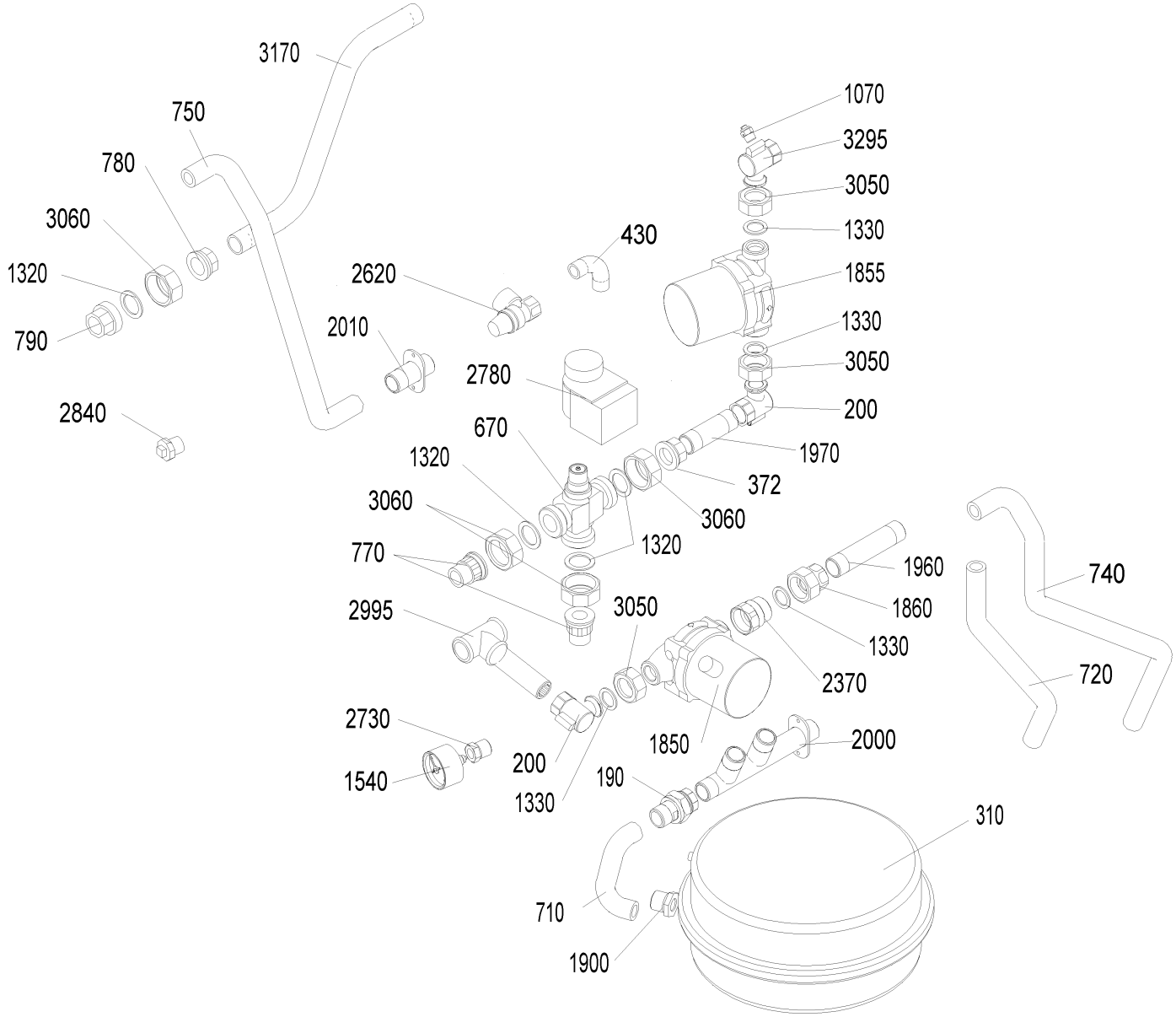
3170
750
780
3060
1320
790
2840
2620
2010
430
2780
670
1320
3060
770
2995
2730
1540
1070
3295
3050
1330
1855
1330
3050
200
1970
372
3060
1320
3050
200
1330
1850
190
2000
1960
1860
1330
2370
740
720
310
710
1900

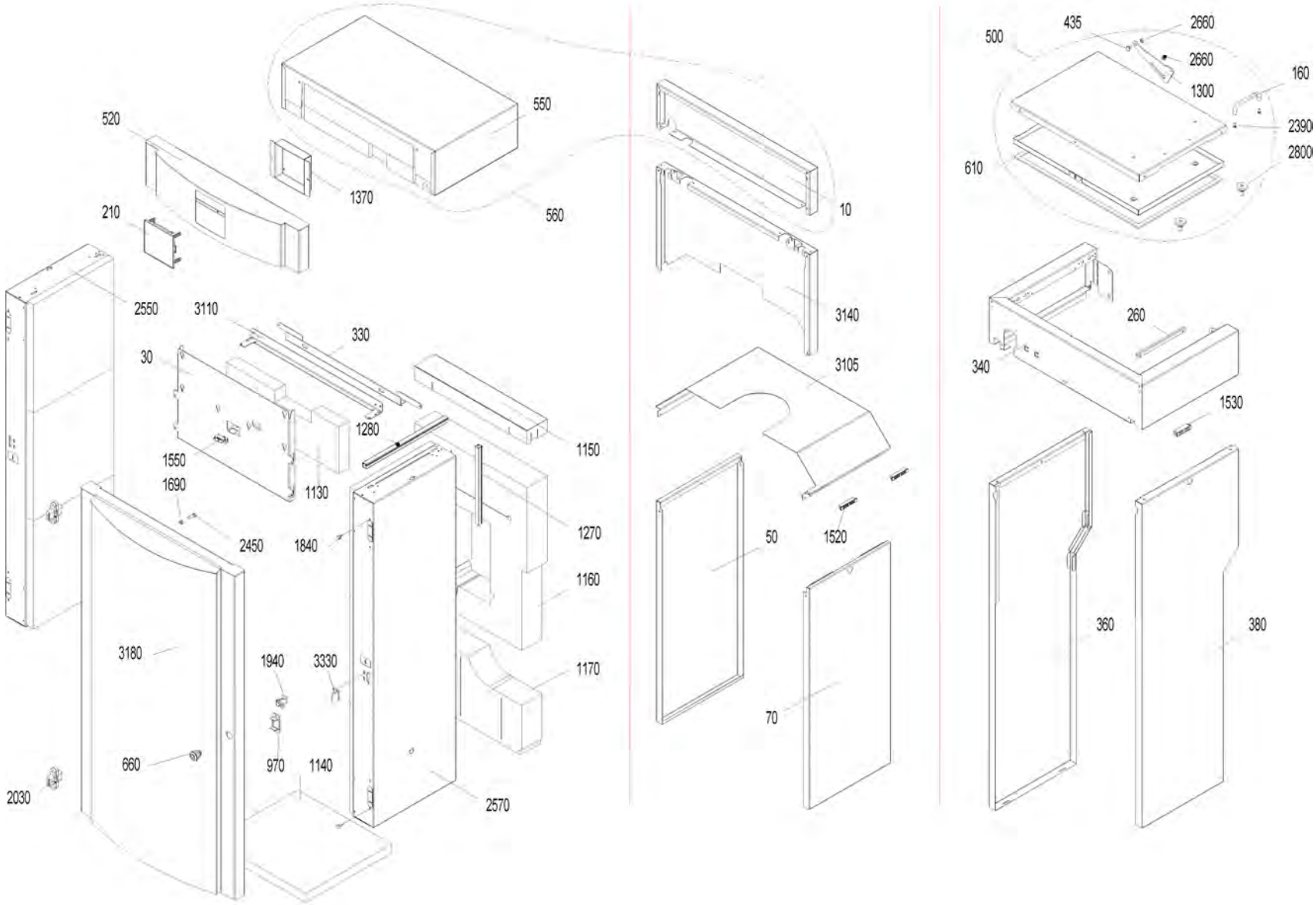
520
550
1370
560
210
2550
3110
330
30
1280
1150
1550
1690
1130
1270
2450
1840
1160
3180
1940
3330
1170
660
970
1140
2030
2570
10
3140
3105
50
1520
70
500
435
2660
2660
1300
160
2390
2800
610
260
340
1530
360
380

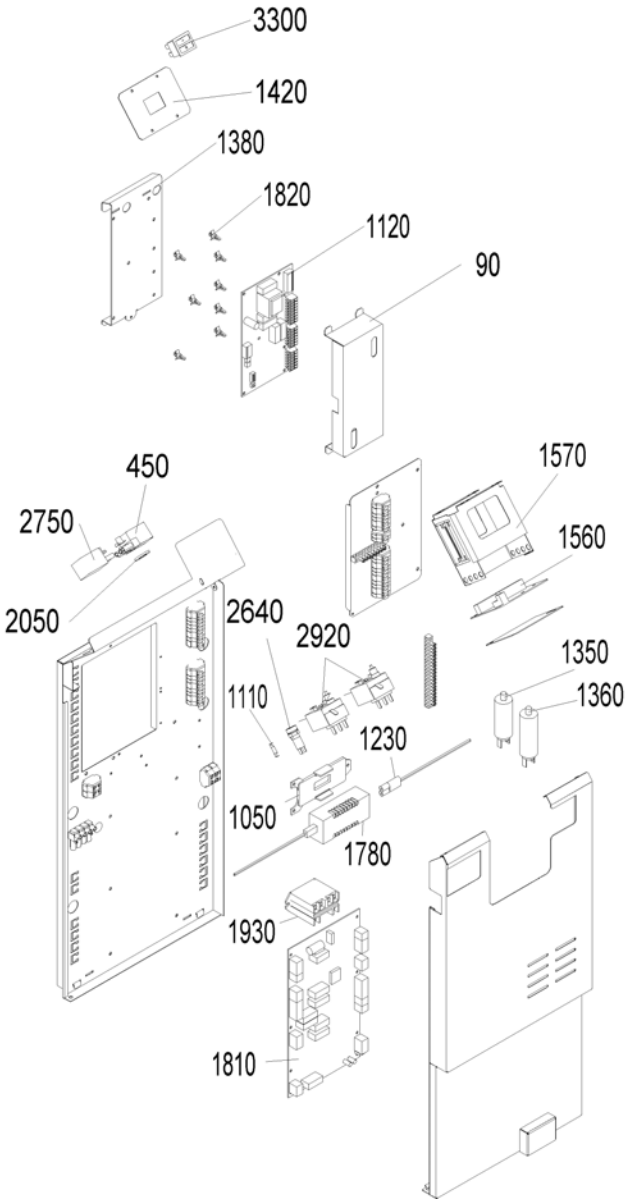
3300
1420
1380
1820
1120
90
450
2750
2050
2640
2920
1570
1560
1350
1360
1110
1230
1050
1780
1930
1810

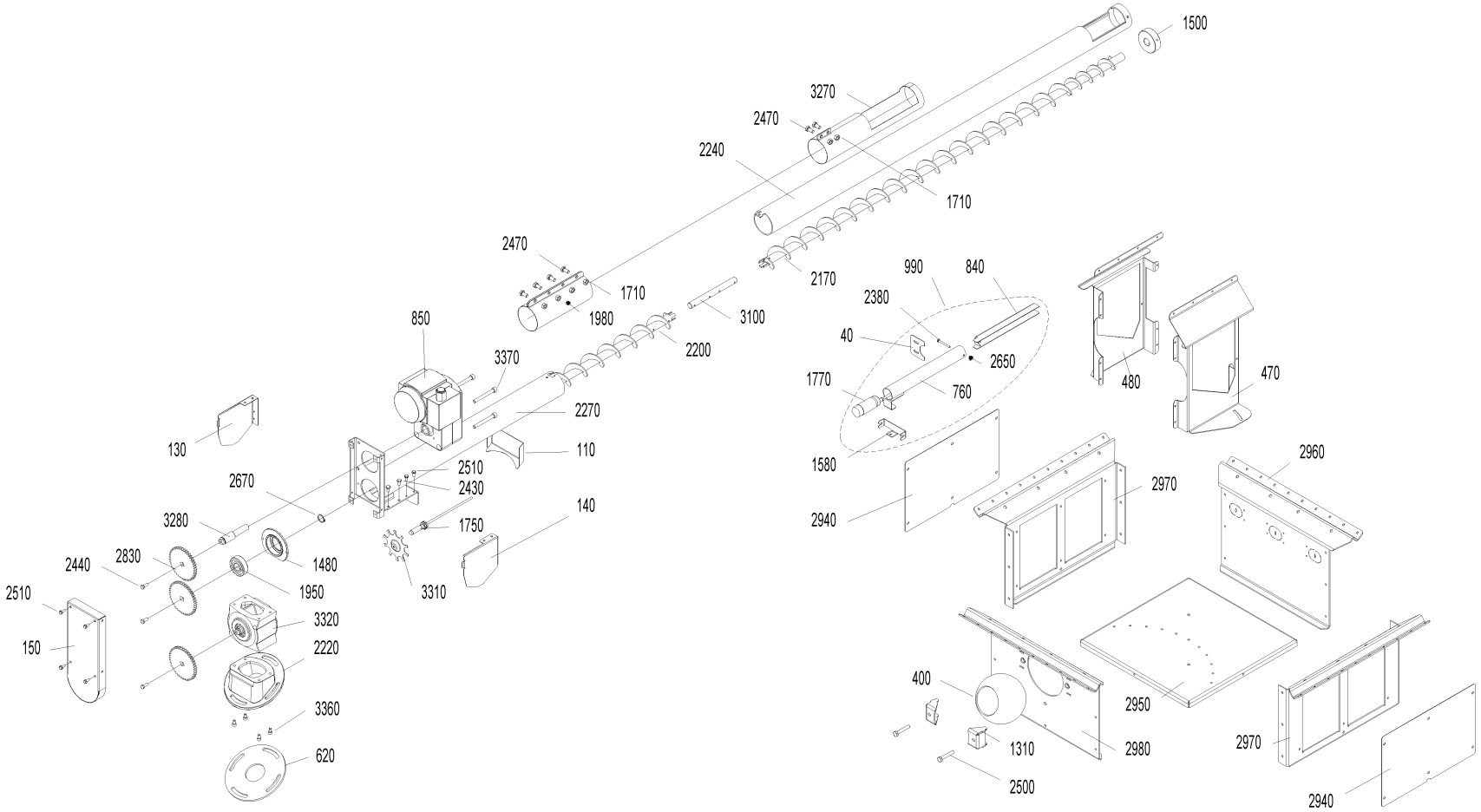
1500
3270
2470
2240
1710
2170
2470
1710
1980
2200
3100
850
3370
2270
110
130
2510
2430
2670
1750
140
3280
2830
2440
1480
1950
2510
3320
150
2220
3360
620
3310
990
840
2380
40
2650
1770
760
1580
2940
480
470
2960
2970
2950
2980
400
1310
2500
2970
2940

Item no.	Article no.	Description	Serialnumber from	Serialnumber t
5	044620	Tank cover plate for FireWIN, VarioWIN	0	9999999999999
10	046287	Rear cover plate, white for VarioWIN	0	9999999999999
10	046544	Rear cover plate, grey RAL7044 for VarioWIN	0	9999999999999
30	046281	Front cover plate for VarioWIN	0	9999999999999
40	046414	Cover, level indicator, funnel for VarioWIN	0	9999999999999
45	048733	Rear cover plate kpl. with isulation	0	9999999999999
48	048732	Cover plate left/right kpl. with isulation VAE/P60	0	9999999999999
50	046293	Left cover, white for VarioWIN	0	9999999999999
50	046547	Left cover, red for VarioWIN	0	9999999999999
55	048731	Top cover plate kpl. with isulation	0	9999999999999
60	048732	Cover plate left/right kpl. with isulation VAE/P60	0	9999999999999
70	046505	Right cover, red for VarioWIN	0	9999999999999
70	046506	Right cover, white for VarioWIN	0	9999999999999
90	051690	Cover BUML incl. Sticker	0	9999999999999
100	044376	Auger cover for VarioWIN, FireWIN	0	9999999999999
110	046419	Auger cover 30° for VarioWIN	0	9999999999999
110	046420	Auger cover 20° for VarioWIN	0	9999999999999
130	046298	Auger cover, left for VarioWIN	0	9999999999999
140	046418	Auger cover, right for VarioWIN	0	9999999999999
145	044518	Base cover for VarioWIN, FireWIN	0	9999999999999
150	046417	Gear cover for VarioWIN	0	9999999999999
160	000477	Aluminium handle for VarioWIN	0	9999999999999
170	013813	Collar screw	0	9999999999999
180	012502	Collar screw	0	9999999999999
190	012091	Connection coupling 3/4“ with Aqua-Stop for male thread for VarioWIN, FireWIN	0	9999999999999
195	007647	Connection piece, primary air for VarioWIN, FireWIN	0	9999999999999
200	012063	Connection bracket 1“-3/4“ for VarioWIN, FireWIN	0	9999999999999
210	011986	InfoWIN plus HW B4 SW V 4.10 VarioWIN and FireWIN from lot 0	0	9999999999999
220	047799	Ash pan left	0	9999999999999
230	047796	Ash pan left - coasting surfaces VarioWIN Exklusive 6kW	0	9999999999999
250	047792	Ash door, complete VarioWIN6	0	9999999999999
255	042743	Holder for cleaning equipments for VarioWIN, LogWIN Premium 180-505,SilvaWIN,BioWIN XL35-60,EasWIN Klassik/Premium 180	0	9999999999999
260	046410	Support, white for VarioWIN	0	9999999999999
260	046495	Support, grey for VarioWIN	0	9999999999999
280	045919	Driving rod seating bracket for VarioWIN, BioWIN 10-26 from batch 30, FireWIN	0	9999999999999
290	033432	Eyebolt similar to DIN 444 - B M10x50 - 4.6 - bright for VarioWIN, FireWIN, VestoWIN Premium 200-202, VestoWIN Klassik 170-220	0	9999999999999
300	033433	Eyebolt similar to DIN 444 - B M12x50 - 4.6 - bright for VarioWIN, FireWIN,EasyWIN Klassik/Premium 180,LogWIN Premium 180-505	0	9999999999999
310	003610	Expansion tank DXM 12 G3/8“ for FireWIN, VarioWIN	0	9999999999999
330	045766	Lower retaining bracket for VarioWIN	0	9999999999999
340	046402	Top container apron, white for VarioWIN	0	9999999999999
340	046483	Top container apron, grey for VarioWIN	0	9999999999999
360	046404	Bottom left container apron, white for VarioWIN	0	9999999999999
360	046487	Bottom left container apron, red for VarioWIN	0	9999999999999
380	046663	Bottom right container apron, red for VarioWIN	0	9999999999999
380	046664	Bottom right container apron, white for VarioWIN	0	9999999999999
390	019415	Wing nut DIN 315 - M8 - brass for FAX, FireWIN, VarioWIN, BioWIN 10, EasyWIN Premium 180	0	9999999999999
400	046283	Sheet metal ball for VarioWIN	0	9999999999999
410	019836	Cylinder screw 2.9x16 (not illustrated)	0	9999999999999
420	018139	Cylinder screw 4.2x13 DIN7981SP (not illustrated)	0	9999999999999
430	002519	Long bend - 1/2“ - No. 3 - black for VarioWIN, FireWIN, GKX	0	9999999999999
435	033091	Bolt DIN 1445 - 8h11 x 4 x 10 - St - galvanised for VarioWIN, FireWIN, BioWIN 10-26, BioWIN XL 35-60	0	9999999999999

Item no.	Article no.	Description	Serialnumber from	Serialnumber
440	046574	Burner for FireWIN from batch 10, VarioWIN - For VarioWIN the cover of the secondary-air-tube has to be removed! -	0	9999999999999
445	048734	Bride burner with seal	0	9999999999999
450	070324	Socket, 3-pin, black	0	9999999999999
460	009792	Socket, 4-pin, black for VarioWIN	0	9999999999999
470	046440	Auger roof sheeting, left for VarioWIN	0	9999999999999
480	046445	Auger roof sheeting, right for VarioWIN	0	9999999999999
490	031244	Blower motor damping mat material: S400-003 for FireWIN, VarioWIN	0	9999999999999
500	046503	Container cover, complete, grey for VarioWIN	0	9999999999999
500	046504	Container cover, complete, white for VarioWIN	0	9999999999999
520	046446	InfoWIN cover, white for VarioWIN	0	9999999999999
520	046540	InfoWIN cover, grey for VarioWIN	0	9999999999999
540	044477	heating surface cover for FireWIN, VarioWIN	0	9999999999999
550	046514	Top cover, white for VarioWIN	0	9999999999999
550	046515	Top cover, grey for VarioWIN	0	9999999999999
560	046666	Top cover with rear cover, white for VarioWIN	0	9999999999999
560	046667	Top cover with rear cover, grey for VarioWIN	0	9999999999999
590	044516	Rear wall cover for FireWIN, VarioWIN	0	9999999999999
600	045096	Heating door rope seal (glass fibre packing 16 x 10) for VarioWIN	0	9999999999999
605	046998	Ash door rope seal (glass fibre packing 16 x 16) for VarioWIN	0	9999999999999
610	046665	Container seal	0	9999999999999
620	031269	Downpipe seal 165 X 53 X 5 mm for Vario WIN	0	9999999999999
630	031241	Downpipe seal 115.5x73.7x5 for FireWIN, VarioWIN	0	9999999999999
635	046616	Glass fibre packing deflector plate burner 16x16x850 mm	0	9999999999999
640	044905	Seal section 461 0069 for FireWIN, VarioWIN	0	9999999999999
645	003362	de: Differenzdruckschalter Sicherheit VarioWIN 6kW	0	9999999999999
650	044490	Spacer plate for FireWIN, VarioWIN	0	9999999999999
660	012256	Turning bolt	0	9999999999999
670	012092	Three-way valve VXG 48.20 3/4" for FireWIN, VarioWIN	0	9999999999999
680	002453	Compression spring 1DXDA10, 3X20X6,5 female thread IG WST.1.4310 for FireWIN, VarioWIN	0	9999999999999
690	046171	Cleaning linkage pressure piece for FireWIN from batch 10, VarioWIN	0	9999999999999
700	046160	Driving rod feed-through for FireWIN from batch 10, VarioWIN	0	9999999999999
710	000214	Stainless steel corrugated tube, DN16x145 mm, 2 union nuts 3/4“, seals for VarioWIN, FireWIN	0	9999999999999
720	000139	Stainless steel corrugated tube, DN16x400 mm, 2 union nuts 3/4“, seals for VarioWIN	0	9999999999999
740	006213	Stainless steel corrugated tube, DN16x600 mm, 2 union nuts 3/4“, seals for VarioWIN, FireWIN	0	9999999999999
750	000140	Stainless steel corrugated tube, DN16x680 mm, 2 union nuts 3/4“, seals for VarioWIN, FireWIN	0	9999999999999
760	046269	Insertion tube for VarioWIN	0	9999999999999
770	044202	Insert 3/4“ - No. 371 - flat-turned for FireWIN, VarioWIN	0	9999999999999
780	011762	Insert 3/4“ - No. 372 - black for VarioWIN, FireWIN	0	9999999999999
782	033097	Nut (low) DIN 439 - B M12 - 04 - galvanised	0	9999999999999
790	000109	Screw-in part 3/4“ - No. 370 - black for VarioWIN, FireWIN	0	9999999999999
800	012504	Ash compactor eccentric disc for FireWIN, VarioWIN	0	9999999999999
810	046463	Down chute compl. VarioWIN	0	9999999999999
815	045038	Down channel for FireWIN, VarioWIN	0	9999999999999
820	000191	KSL029 Forming screw, diameter 8x26/M5 for NBS,OEX,ASN,PMX,fittings cabinet Vesto 200, VarioWIN	0	9999999999999
830	017029	Spring shackle for VarioWIN	0	9999999999999
840	045916	Proximity switch attachment for VarioWIN	0	9999999999999
850	007106	Gearmotor with connection cable, type: FGA 53 / 4DEKG 56 # for VarioWIN, FireWIN from batch 6, BioWIN XL 35-60	0	9999999999999
860	016780	Cylinder screw M4x12 DIN 7985	0	9999999999999
870	016950	Cyl. screw M5x12, galvanised, with cross slot, ISO 7045 (DIN 7985) for VarioWIN, FireWIN	0	9999999999999
880	017094	WERL056 Flat brush 1 1/2" NO. 72753 for FireWIN, VarioWIN, BioWIN10-26, BioWIN XL 35-60	0	9999999999999
890	045615	Ash compactor flange for FireWIN, VarioWIN	0	9999999999999

Item no.	Article no.	Description	Serialnumber from	Serialnumber
900	051479	Sensor pipe flange FireWIN, VarioWIN	0	9999999999999
910	044489	Blower flange for FireWIN, VarioWIN	0	9999999999999
920	044372	Auger flange for FireWIN, VarioWIN	0	9999999999999
930	044487	Rotary feeder flange for FireWIN, VarioWIN	0	9999999999999
940	031243	Auger motor flange seal (S400-003) for FireWIN, VarioWIN	0	9999999999999
950	045986	Auger motor flange plate for FireWIN from batch 6, VarioWIN	0	9999999999999
960	019415	Wing nut DIN 315 - M8 - brass for FAX, FireWIN, VarioWIN, BioWIN 10, EasyWIN Premium 180	0	9999999999999
970	046473	Guide plate for VarioWIN	0	9999999999999
980	045614	Ash compactor guide plate for FireWIN, VarioWIN	0	9999999999999
990	046270	Sheet steel tank fill level switch for VarioWIN	0	9999999999999
1000	012501	Fork head M8xL1 16mm / L2 32mm for FireWIN, VarioWIN	0	9999999999999
1010	046471	Blower wheel for FireWIN from batch 10, VarioWIN	0	9999999999999
1020	033112	Setscrew M8x10 DIN916	0	9999999999999
1040	001438	Semicircular ring for corrugated tube 3/4“ for FireWIN, NBE, HMX, VarioWIN	0	9999999999999
1045	046262	Left retaining plate for VarioWIN	0	9999999999999
1048	046260	Right retaining plate for VarioWIN	0	9999999999999
1050	002050	Power supply unit 002049 holding plate for VarioWIN, FireWIN, BioWIN 10-26, BioWIN XL 35-60, LogWIN Premium 180-505	0	9999999999999
1060	004870	EKX901 Manually operated bleeder 1/2" with slotted screw for AccuWIN, AccuWIN Solar, VarioWIN, FireWIN	0	9999999999999
1070	001058	ASL001 Manually operated bleeder VFR 1/4“ for OE/KN/M,GKX,ASN,ASL,OEX, MIRA, fittings cabinet Vesto 200, VarioWIN, FireWIN	0	9999999999999
1080	045613	Coasting surface lever for NHF for ash compactor for FireWIN, VestoWIN, VarioWIN	0	9999999999999
1090	046565	Heating door complete for VarioWIN	0	9999999999999
1100	044979	Heating door for VarioWIN	0	9999999999999
1110	025967	Cap nut DIN 1587 - M8 - 6 - galvanised for FAX, FireWIN, VarioWIN, BioWIN 10-26, EasyWIN Klassik/Premium 180	0	9999999999999
1120	051541	Modification set BUML TTL to BUML TTL 2Z	0	9999999999999
1130	011139	Front cover plate insulation 40x157x440 for VarioWIN	0	9999999999999
1140	011138	Floor insulation 30x337x367 for VarioWIN	0	9999999999999
1150	011137	Top rear insulation 2 80x46x440 for VarioWIN	0	9999999999999
1160	011140	Top rear insulation 1 80x440x562,5 for VarioWIN	0	9999999999999
1170	011144	Bottom rear insulation 80x232x388 for VarioWIN	0	9999999999999
1180	044994	Insulating panel for VarioWIN	0	9999999999999
1190	044722	Cable for combustion chamber door X15 for FireWIN, VarioWIN	0	9999999999999
1200	000395	Three-way valve cable for FireWIN,GMX,MIRA,GENIO/MultiWIN,VarioWIN	0	9999999999999
1210	044730	Cable for shaker motor limit X14 switch for FireWIN, VarioWIN	0	9999999999999
1220	044729	Cable for ash compactor motor X7 for FireWIN, VarioWIN	0	9999999999999
1230	002051	Power supply unit cable FRIWO (primary power line) for VarioWIN, FireWIN, BioWIN 10-26, BioWIN XL 35-60, LogWIN Premium 180-505	0	9999999999999
1240	044727	Cable for shaker motor X5 for FireWIN, VarioWIN	0	9999999999999
1250	044728	Cable for ignition element X6 for FireWIN, VarioWIN	0	9999999999999
1255	053643	Cable - ignition element for BW1, BW2, FireWIN and VarioWIN	0	9999999999999
1260	009542	Cable feed-through	0	9999999999999
1270	046508	Rear cable duct 15x15x260 mm for VarioWIN	0	9999999999999
1280	046507	Top cable duct 15x15x320 mm for VarioWIN	0	9999999999999
1290	004385	KFE cock	0	9999999999999
1300	046415	Folding support for VarioWIN	0	9999999999999
1310	046433	Clamp for VarioWIN	0	9999999999999
1320	016179	Gasket 1“ 44 x 3 x 2 mm for VarioWIN, FireWIN	0	9999999999999
1330	016152	ZH 094 Klingerit seal 1/2" (30x21x2mm) for AccuWIN, AccuWIN Solar, VarioWIN, FireWIN	0	9999999999999
1340	003019	Seal flange combustion chamber sensor VarioWIN and FireWIN	0	9999999999999
1340	016160	Klingerit seal 3/4“ (38x27x2 mm) for VarioWIN, FireWIN	0	9999999999999
1350	007330	Condenser for motor MAB 500V, 3µF for HMX,PMX,SWK,BioWIN10-26,FireWIN,VarioWIN,BioWIN XL 35-60, EasyWIN Premium 180,LogWIN Premiu	0	9999999999999
1360	007332	Condenser 4µF for auger motor for PMX150,BioWIN10/15,FireWIN,VarioWIN, BioWIN XL 35-60	0	9999999999999
1365	045035	Down channel bracket for VarioWIN	0	9999999999999

Item no.	Article no.	Description	Serialnumber from	Serialnumber t
1370	046254	InfoWIN bracket for VarioWIN	0	9999999999999
1380	045761	BUML interface bracket for FireWIN, VarioWIN	0	9999999999999
1390	045215	Shake-out motor bracket for BioWIN 10-26 from batch 30, FireWIN from batch 10, VarioWIN	0	9999999999999
1400	045001	Mains power plug bracket for VarioWIN	0	9999999999999
1410	047809	Bracket compl. (independently of the room air) VarioWIN6	0	9999999999999
1420	044172	Rocker switch bracket for FireWIN, VarioWIN	0	9999999999999
1430	007324	Cone top part VarioWIN XS	0	9999999999999
1440	007322	Cone bottom part	0	9999999999999
1460	045619	Ash compactor bearing arm for FireWIN, VarioWIN	0	9999999999999
1480	007086	Bearing bush, diameter 92x17mm for VarioWIN, BioWIN XL 35-60	0	9999999999999
1490	007125	Bearing for vibrating drive	0	9999999999999
1500	007090	Auger bearing diameter 62.5x20 mm for VarioWIN	0	9999999999999
1510	002296	Long nipple 3/4“x60 mm, brass for VarioWIN, FireWIN	0	9999999999999
1520	001759	Magnetic lock No. 246.41 for GKW,NBE,GKX,GWX,GTX,PMX,HMX,FireWIN,VarioWIN, BioWIN 10-26	0	9999999999999
1530	001760	Magnetic lock, black - VW, LWP18-50, LWK	0	9999999999999
1540	001066	ASL002 Pressure gauge TYP101 Ø50 for OEX,OE/KN/M,GKW,ASN,ASL,GKX,GKA/E,MIRA,FireWIN,VarioWIN,fittings cabinet Vesto 200	0	9999999999999
1550	009277	Air control microswitch	0	9999999999999
1560	044572	Module connection PCB for FireWIN, VarioWIN	0	9999999999999
1570	041036	Module guide complete for FireWIN, VarioWIN	0	9999999999999
1580	046394	Proximity switch mounting bracket for VarioWIN	0	9999999999999
1590	046972	Ash compaction motor, coasting surface cleaning for FireWIN, VarioWIN	0	9999999999999
1610	012530	Grate shaking motor mounted replacement: 012517 for BioWIN10-26, FireWIN, VarioWIN	0	9999999999999
1620	044158	Blower motor with cable for blower for SilvaWIN, LogWIN, FireWIN, BioWIN XL 35-60, EasyWIN Premium 180, LogWIN Premium 180-505	0	9999999999999
1630	044944	Auger motor mounted replacement ET: 045907 for FireWIN, VarioWIN	0	9999999999999
1640	031156	Hexagon nut M10 DIN 439	0	9999999999999
1650	033097	Nut (low) DIN 439 - B M12 - 04 - galvanised	0	9999999999999
1660	016624	Nut DIN 934 - M12 - 8 - galvanised for VarioWIN, FireWIN, EasyWIN Klassik/Premium 180, LogWIN Premium 180-505	0	9999999999999
1670	016551	Hexagon nut M3 DIN 934	0	9999999999999
1680	016586	Hexagon nut M5 DIN 934	0	9999999999999
1690	016594	Hexagon nut M6 DIN 934	0	9999999999999
1700	016596	Nut DIN 934 - M6 - A2 for VarioWIN, FireWIN, BioWIN10-26, BioWIN XL 35-60	0	9999999999999
1710	015992	Nut M8 DIN 934 V2 - LogWIN Klassik pellet ready	0	9999999999999
1720	016565	Hexagon nut M5 with flange and gearing (not illustrated)	0	9999999999999
1730	045612	Ash compactor coasting surface plate, front for FireWIN, VarioWIN	0	9999999999999
1740	045611	Ash compactor coasting surface plate, rear for FireWIN, VarioWIN	0	9999999999999
1750	006832	Proximity switch M12, inductive	0	9999999999999
1760	009342	Proximity switch, inductive M8x1 for VarioWIN, FireWIN, BioWIN 10-26	0	9999999999999
1770	006821	Proximity switch, capacitive	0	9999999999999
1780	051645	Power supply unit 12V	0	9999999999999
1790	006849	O-ring FPM70 45 x 4	0	9999999999999
1800	006766	Feather key, without tightening DIN6885 A 6x6x28 mm for PMX, BioWIN10-26, FireWIN, VarioWIN, BioWIN XL 35-60	0	9999999999999
1810	011997	de: Platine FMP -V V6.50 VarioWIN	0	9999999999999
1820	007609	PCB holder	0	9999999999999
1830	007206	Primary air pin 6VW	0	9999999999999
1840	000299	Silicone buffer	0	9999999999999
1850	006399	HUPA pump 15-4.0 U130mm for AccuWIN, AccuWIN Solar, VarioWIN, FireWIN	0	9999999999999
1855	006419	Pump HEP 15-4.0 E 130 mm - Energy savings pump for FireWIN, VarioWIN	0	9999999999999
1860	012139	Pump screw connection DN3/4“-1“ - brass for FireWIN, VarioWIN	0	9999999999999
1870	044780	Exhaust pipe cleaning cover for FireWIN, VarioWIN	0	9999999999999
1880	044912	Clearer flat, complete for FireWIN, VarioWIN	0	9999999999999
1890	007655	Knurled nut with through-hole thread M5 SW for VarioWIN, FireWIN,BioWIN10-26	0	9999999999999

Item no.	Article no.	Description	Serialnumber from	Serialnumber t
1895	002023	Reduction nipple 1“-3/4“ for VarioWIN	0	9999999999999
1900	045025	Reduction nipple 3/8“-3/4“, turned for FireWIN, VarioWIN	0	9999999999999
1910	046158	Cleaning linkage, complete for FireWIN from batch 10, VarioWIN	0	9999999999999
1920	046570	Cleaning tool / removal device for cone for BioWIN 10 from batch30, VarioWIN	0	9999999999999
1930	005025	Power relay OMRON G7L-2A-BUB 200/240AC for PMX,BioWIN XL, BioWIN10-26,FireWIN,VarioWIN, BioWIN XL 35-60	0	9999999999999
1940	046474	Catch for panelling for VarioWIN	0	9999999999999
1950	012499	Grooved ball bearing	0	9999999999999
1960	045023	Hot water tank flow pipe 3/4“x118.5 mm - black for FireWIN, VarioWIN	0	9999999999999
1970	044198	Pipe for mixer group 3/4“x81.5 mm - black for FireWIN, VarioWIN	0	9999999999999
1980	046437	Pipe clamp,Ø 68x200 for VarioWIN	0	9999999999999
1990	045212	Grate plate, top for BioWIN 10/15 from batch 30, FireWIN from batch 10, VarioWIN	0	9999999999999
2000	044205	Return complete for FireWIN, VarioWIN	0	9999999999999
2010	044201	Return pipe for FireWIN, VarioWIN	0	9999999999999
2020	046282	Rear wall for VarioWIN	0	9999999999999
2030	007103	Cladding door hinge for LogWIN Premium 180-505, VarioWIN, BioWIN XL 35-60	0	9999999999999
2040	018058	U-washer	0	9999999999999
2050	017183	U-Washer DIN 125B - M12 - galvanised for VarioWIN, FireWIN, BioWIN XL 35-60	0	9999999999999
2060	024765	Washer DIN 125 - 5 - galvanised for VarioWIN	0	9999999999999
2070	024766	Washer DIN 125 - 6 - galvanised for VarioWIN	0	9999999999999
2080	024767	Washer DIN 125 - M8 - galvanised, ISO 7089 for VarioWIN, BioWIN 10-26, BioWIN XL 35-60, EasyWIN Premium 180	0	9999999999999
2090	021474	Disc 3 DIN134	0	9999999999999
2100	018309	Disc 5 DIN134	0	9999999999999
2110	020540	U-Washer DIN 134 - M6 - galvanised for VarioWIN, FireWIN	0	9999999999999
2120	018066	Washer DIN 134 - 8 - galvanised for VarioWIN	0	9999999999999
2130	024780	Disc 10 ISO7089	0	9999999999999
2135	031753	Disc 6 ISO 7093	0	9999999999999
2140	031755	Disc 8 ISO 7093	0	9999999999999
2150	016025	Silicone hose PU1, diameter 25x320, secondary air, independent of room air for FireWIN, VarioWIN	0	9999999999999
2160	016026	Silicone hose SG1M, diameter 32x330, primary air, independent of room air for FireWIN, VarioWIN	0	9999999999999
2165	010688	Hose sleeve 1/8"x 6 mm, Ms FireWin	0	9999999999999
2170	046239	Auger 1307 mm for VarioWIN	0	9999999999999
2170	046240	Auger 761 mm for VarioWIN	0	9999999999999
2170	046241	Auger 1853 mm for VarioWIN	0	9999999999999
2200	045093	Direct auger for VarioWIN	0	9999999999999
2210	044612	Daily use container auger for FireWIN, VarioWIN	0	9999999999999
2220	012520	Auger flange 30° pour VarioWIN	0	9999999999999
2220	012529	Auger flange 20° for VarioWIN	0	9999999999999
2240	046441	Auger tube 773,5 mm for VarioWIN	0	9999999999999
2240	046465	Auger tube 1320 mm for VarioWIN	0	9999999999999
2240	046466	Auger tube 1865 mm for VarioWIN	0	9999999999999
2270	045094	Direct auger tube for VarioWIN	0	9999999999999
2280	044896	Auger tube with friction bearing for daily use container, cpl., mounted for FireWIN, VarioWIN	0	9999999999999
2290	009219	Screw door handle bearing M12 (WAF17/30) - galvanised for HMX, BioWIN10-26, FireWIN, VarioWIN, EasyWIN Klassik/Premium 180	0	9999999999999
2300	045076	Screw M6 (with U-washer and nut) for heating surface cleaning complete for PMX, BioWIN10-26, FireWIN, VarioWIN	0	9999999999999
2320	045223	Inner driving rod for BioWIN 10-26 from batch 30, VarioWIN, FireWIN	0	9999999999999
2330	045232	Driving rod, complete for BioWIN10-26 à partir de lot 30 , FireWIn à partir de lot 10, VarioWIN	0	9999999999999
2340	046090	Container protective grille for VarioWIN	0	9999999999999
2350	041498	Protective tube for exhaust gas sensor	0	9999999999999
2360	047803	Swivel shaft complete 6VW	0	9999999999999
2370	012140	Gravity brake SBM 3/4“ G1 IG/AG for VarioWIN	0	9999999999999
2380	016752	Hexagon screw DIN 933 - M4x40 - 8.8 - galvanised for VarioWIN	0	9999999999999

Item no.	Article no.	Description	Serialnumber from	Serialnumber t
2390	016756	Hexagon screw M5x10 DIN 933	0	9999999999999
2400	017020	Hexagon screw Niro DIN 933 - M5x12 - A2 for HMX, FireWIN, VarioWIN	0	9999999999999
2410	015059	Hexagon screw DIN 933 - M5x35 - 8.8 - galvanised for VarioWIN, FireWIN	0	9999999999999
2420	015026	Hexagon screw DIN 933 - M6x10 - 8.8 - galvanised for VarioWIN, FireWIN	0	9999999999999
2430	017051	Hexagon screw M6x12 DIN 933 (not illustrated)	0	9999999999999
2440	024759	Hexagon screw DIN 933 - M6x16 - 8.8 - galvanised for VarioWIN	0	9999999999999
2450	015471	Hexagon screw M6x20 DIN 933	0	9999999999999
2460	015041	Hexagon screw DIN 933 - M6x25 - 8.8 - galvanised for VarioWIN, FireWIN	0	9999999999999
2470	015134	Hexagon screw M8x16 DIN 933	0	9999999999999
2480	017086	Hexagon screw M8x20 DIN 933 (not illustrated)	0	9999999999999
2490	017873	Hexagon screw DIN 933 - M8x20 - A2 for VarioWIN, FireWIN	0	9999999999999
2500	032654	Hexagon screw DIN 933 - M8x45 - 8.8 - galvanised for VarioWIN	0	9999999999999
2510	031545	Hexagon screw M5x12 DIN 7500 (not ilustrated)	0	9999999999999
2520	031549	Hexagon screw M6x12 DIN 7500	0	9999999999999
2530	017882	Thread-rolling hexagon screw DIN 7500 - M8x16 TT - galvanised for VarioWIN, EasyWIN Klassik/Premium 180	0	9999999999999
2540	027392	Hexagon pin key with T-handle 10x200 for VarioWIN, BioWIN XL 35-60	0	9999999999999
2550	046510	Left side panel, white for VarioWIN	0	9999999999999
2550	046511	Left side panel, red for VarioWIN	0	9999999999999
2570	046512	Right side panel, white for VarioWIN	0	9999999999999
2570	046513	Right side panel, red for VarioWIN	0	9999999999999
2585	024768	Hexagon screw M6x16, DIN 993 for BioWIN XL 35-60	0	9999999999999
2590	017222	Countersinking screw DIN 965 - M3x12 - galvanised with cross slot for VarioWIN, FireWIN, EasyWIN Klassik/Premium 180	0	9999999999999
2600	017223	Countersinking screw DIN 965 - M4x70 - galvanised with cross slot for VarioWIN, FireWIN	0	9999999999999
2610	016863	Countersinking screw M6x16	0	9999999999999
2620	001031	ASL004 Safety valve 1/2“ 2.5 bar for GWX,OEX,OE/KN/M,ASL,GKW,GTX,ASN,GKA/E,MIRA,FireWIN,Vesto Art.Nr.:49292, VarioWIN, fittings ca	0	9999999999999
2630	003228	6.3A fuse (not illustrated)	0	9999999999999
2640	003663	Fuse holder	0	9999999999999
2650	016724	Lock nut DIN 985 - M4 - galvanised for VarioWIN	0	9999999999999
2660	016732	Lock nut DIN 985 - M6 - galvanised for VarioWIN	0	9999999999999
2670	016171	Locking ring Ø20x1.2	0	9999999999999
2680	009231	Silicone U-section, black 6x7,5 replacement:046057 (FW) or 046056 (HMX,PMX) for HMX, PMX, FireWIN, VarioWIN	0	9999999999999
2690	016073	WERV013 Silicone seal, black 310ml	0	9999999999999
2695	016022	Silicone hose 5 x 8mm for FireWIN	0	9999999999999
2700	009540	Spatula	0	9999999999999
2710	018666	Clamping pin DIN 1481 - Ø4x20, for 3-way changeover unit for PMX, VarioWIN (* not illustrated), VestoWIN Premium 200-202, VestoWIN	0	9999999999999
2720	018184	Clamping pin DIN 1481 - Ø 5x14 for VarioWIN	0	9999999999999
2730	010286	ASL0021 Shut-off valve 1/4“ internal for pressure gauge R1/2“ for ASL/M,ÖR,SH,OEM,OEN,GTX,ASN,OEX,MIRA,FireWIN,fittings cabinet Ve	0	9999999999999
2740	005010	Steel collar 3/4“x50, black for VarioWIN, FireWIN	0	9999999999999
2750	070323	Plug, 3-pin, black	0	9999999999999
2760	070162	Plug, 4-pin, black for auger motor for VarioWIN, FireWIN	0	9999999999999
2770	070374	Plug, 7-pin (3-pin black, 4-pin brown) for blower motor for FireWIN, VarioWIN	0	9999999999999
2780	012240	Positioning drive SSY319 (230V, 50 Hz, 150s) for VarioWIN, FireWIN	0	9999999999999
2790	009992	Leg - JTB30 - M10x60 with slot for OEX, NBA, MIRA, VarioWIN, FireWIN	0	9999999999999
2800	009991	Leg - JTLO 38 - M8x16 for VarioWIN	0	9999999999999
2810	047115	Spur gear Z=28; m=1.5, for shake-out drive for FireWIN from batch 10, BioWIN 10/15 from batch 30, VarioWIN	0	9999999999999
2820	044613	Spur gear Z=32; m=2.5 for FireWIN from batch 6, VarioWIN - For units up to batch 5 009465 and 044612 must be replaced! -	0	9999999999999
2830	045771	Spur gear M2 Z45	0	9999999999999
2840	000353	KSN091 WAF Plug 1/2“ - no. 290 1- black No. 49304 for KSN, OEK, VestoWIN Klassik 170-220, FireWIN, VarioWIN	0	9999999999999
2850	012042	Plug 1/2“ MS, self-sealing, brass VER923 for VarioWIN, FireWIN	0	9999999999999
2860	044778	Jet protection plate, complete for FireWIN, VarioWIN	0	9999999999999
2870	006820	MES007 Immersion sensor (exhaust gas sensor) Pt 1000 for PMX, FireWIN, VarioWIN, BioWIN 10-26, BioWIN XL 35-60	0	9999999999999

Item no.	Article no.	Description	Serialnumber from	Serialnumber t
2880	502186	MES009M Immersion sensor	0	9999999999999
2890	000027	KSL332 Immersion sleeve 130 mm long for KSL/ZHL,GKA/E,fittings cabinet Vesto200, VarioWIN	0	9999999999999
2900	012536	Disc spring DIN2093 - 16x8.2x0.6 for VarioWIN, FireWIN	0	9999999999999
2910	007626	Thermocouple	0	9999999999999
2920	005672	Thermostat LS1+100-6U	0	9999999999999
2930	045623	Ash pan partition plate for FireWIN, VarioWIN	0	9999999999999
2940	046556	Funnel cover, left/right for VarioWIN	0	9999999999999
2950	039750	Funnel base for VarioWIN	0	9999999999999
2960	039754	Funnel side panel, rear for VarioWIN	0	9999999999999
2970	039752	Funnel side panel, right/left for VarioWIN	0	9999999999999
2980	039753	Funnel side panel, front for VarioWIN	0	9999999999999
2990	000092	T-piece 3/4“ - no. 130 - black for VarioWIN, FireWIN	0	9999999999999
2995	002024	T-piece, brass for FireWIN, VarioWINF	0	9999999999999
2997	003208	Grommet 10x17.5x1.2	0	9999999999999
3000	009553	Ash door handle rod for FireWIN, VarioWIN	0	9999999999999
3010	009549	Heating door handle rod for FireWIN, VarioWIN	0	9999999999999
3020	007083	Door stone for heating door for VarioWIN	0	9999999999999
3030	044588	Door locking bar for FireWIN, VarioWIN	0	9999999999999
3040	044591	Door locking latch for FireWIN, VarioWIN	0	9999999999999
3050	012052	Union nut 1/2“ - brass for VarioWIN, VestoWIN Klassik 170-220	0	9999999999999
3060	011770	Union nut 3/4“ - no. 374 - black WAX933 for VarioWIN, FireWIN	0	9999999999999
3080	006012	Silicone U-section, approx. 7x8.5 mm for VarioWIN, FireWIN, BioWIN 10-26	0	9999999999999
3090	000446	Valve insert for three-way valve 3/4“ from the VC-Serie, VCZZ6000B for VarioWIN, FireWIN	0	9999999999999
3095	012540	Venturi nozzle 6VW	0	9999999999999
3100	012528	Auger connector, Ø15.9, h10x165 mm for VarioWIN	0	9999999999999
3105	046285	Connecting plate, coated, white for VarioWIN	0	9999999999999
3105	046546	Connecting plate, coated, red for VarioWIN	0	9999999999999
3110	046279	Connecting plate, top for VarioWIN	0	9999999999999
3120	044782	Connecting piece HFR, coasting surface cleaning for FireWIN, VarioWIN	0	9999999999999
3130	047806	Compactor plate 6VW	0	9999999999999
3140	046290	Rear cladding, white for VarioWIN	0	9999999999999
3140	046545	Rear cladding, red for VarioWIN	0	9999999999999
3160	001306	Screw connection male thread D 1402, 3/4“x18 mm AG18 for FireWIN, VarioWIN	0	9999999999999
3170	007055	Flow pipe for FireWIN, VarioWIN	0	9999999999999
3180	046244	White panelling for VarioWIN	0	9999999999999
3180	046553	Red/grey panelling for VarioWIN	0	9999999999999
3200	009948	Wago terminal block 261; 2-pin WMS 1-2, 3-piece for VarioWIN, FireWIN	0	9999999999999
3210	006833	Wago terminal block 261; 4-pin "12V GND"	0	9999999999999
3220	006834	Wago terminal block 261; 4-pin "safety 1-4"	0	9999999999999
3230	009960	Wago terminal block 261; 8-pin 230V extnd. for VarioWIN, FireWIN, BioWIN10-26, BioWIN XL 35-60 (*not illustrated)	0	9999999999999
3240	009891	Wago terminal block 261; 11-pin safety 1-11 for FireWIN, VarioWIN	0	9999999999999
3250	009966	Wago terminal block 261; 11-pin orange extra-low voltage Extnd. for VarioWIN, FireWIN, BioWIN XL 35-60	0	9999999999999
3260	009968	Wago terminal block 261; 13-pin orange extra-low voltage (no. 1-13), for VarioWIN, FireWIN, BioWIN 10-26, BioWIN XL 35-60 (*not il	0	9999999999999
3270	046439	Maintenance pipe for VarioWIN	0	9999999999999
3280	012516	Shaft for motor, Ø = 20 h7x96.3mm for VarioWIN	0	9999999999999
3290	045216	Limit switch bracket for BioWIN 10-26 from batch 30, VarioWIN, FireWIN	0	9999999999999
3295	045024	Elbow adapter with G 14“ for VarioWIN	0	9999999999999
3300	005563	Rocker switch SW/GR 0-1	0	9999999999999
3310	044614	Toothed washer for FireWIN, BioWIN XL 35-60, VarioWIN	0	9999999999999
3320	009465	Rotary feeder for FireWIN from batch 6, VarioWIN	0	9999999999999
3330	046435	Centring plate for VarioWIN	0	9999999999999

Item no.	Article no.	Description	Serialnumber from	Serialnumber t
3335	046614	de: Schottblech Brenner VarioWIN 6	0	9999999999999
3337	053851	de: Zündelement inkl. Kabel beigelegt.	0	9999999999999
3337	055201	Ignition element BioWIN10-26, FireWIN from lot 15, VarioWIN from lot 15 BioWIN XL, LWK	0	9999999999999
3337	055202	Modifications set ignition	0	9999999999999
3340	009567	Cylindrical button 519-28-M10 for FireWIN, VarioWIN	0	9999999999999
3350	017048	Shoulder screw M8 10x25 ISO 7379	0	9999999999999
3360	033531	Cylinder-head screw, hexagon socket ISO 4762 - M6x10 - 8.8 - (DIN 912) for VarioWIN, BioWIN 10-26	0	9999999999999
3370	017049	Cylinder-head screw, hexagon socket ISO 4762 - M8x70 - 8.8 - galva. (DIN 912) for VarioWIN, FireWIN, BioWIN XL 35-60	0	9999999999999
3380	020117	Cylinder-head screw, hexagon socket ISO 4762 - M12x25 - 8.8 - galva. (DIN 912) for VarioWIN, FireWIN, BioWIN10-26, LogWIN Premium	0	9999999999999
3390	012537	Cylinder-head screw, hexagon socket M6x10, special version with tall head for VarioWIN, FireWIN	0	9999999999999

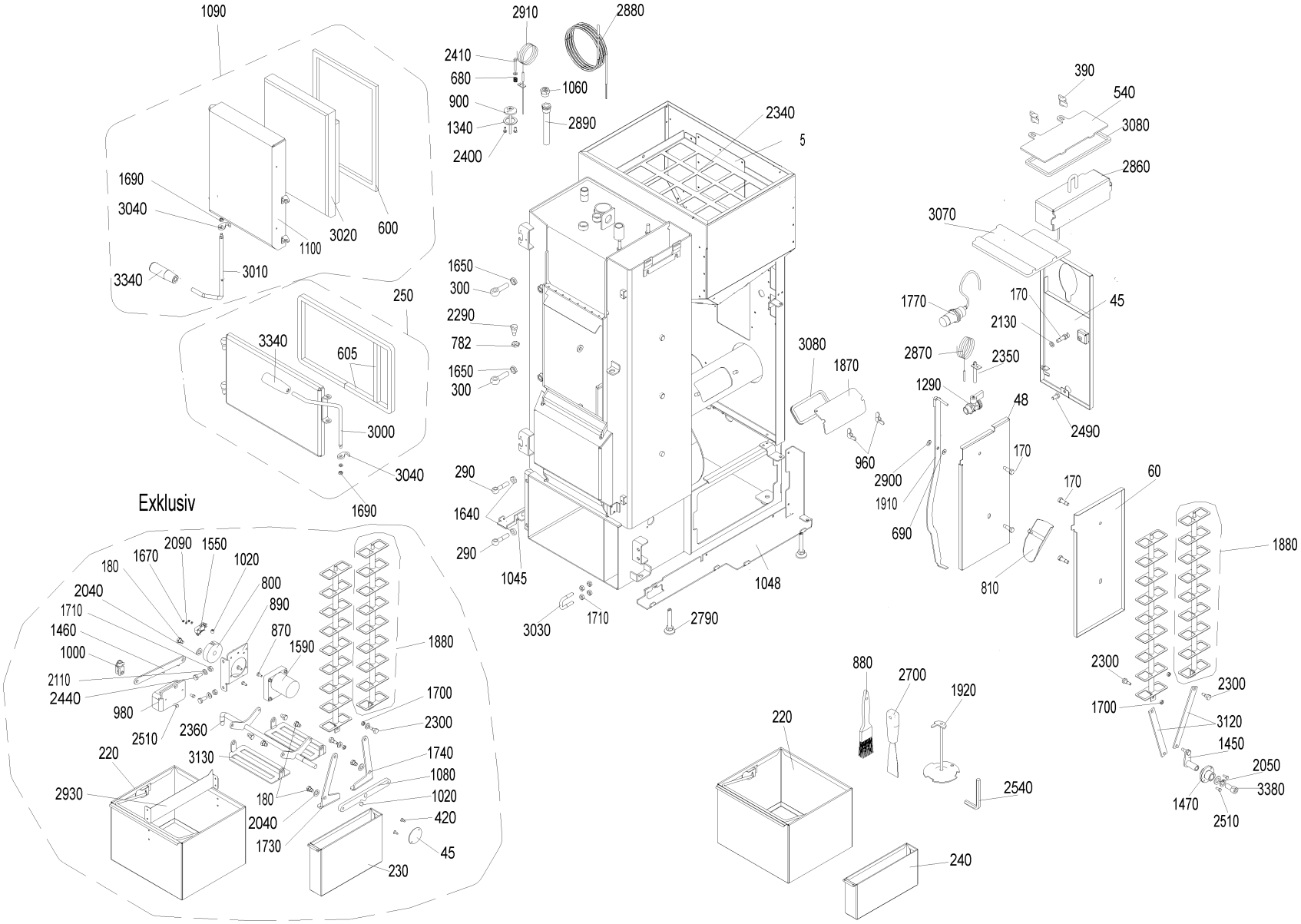
1090
1690
3040
3020
600
1100
3340
3010
250
3340
605
3000
3040
1690
Exklusiv
2090
1550
1670
1020
180
800
2040
890
1710
870
1460
1590
1000
1880
2110
1700
2440
2300
980
1740
2510
2360
1080
3130
1020
220
420
2930
180
45
2040
1730
230
2910
2880
2410
680
1060
900
2890
1340
2400
2340
5
1650
300
2290
782
1650
300
290
1640
290
1045
3030
1710
2790
1048
3080
1870
960
390
540
3080
2860
3070
1770
170
45
2130
2870
2350
1290
48
2490
2900
170
1910
690
810
170
60
1880
2300
2300
1700
3120
1450
2050
3380
1470
2510
880
2700
1920
220
2540
240

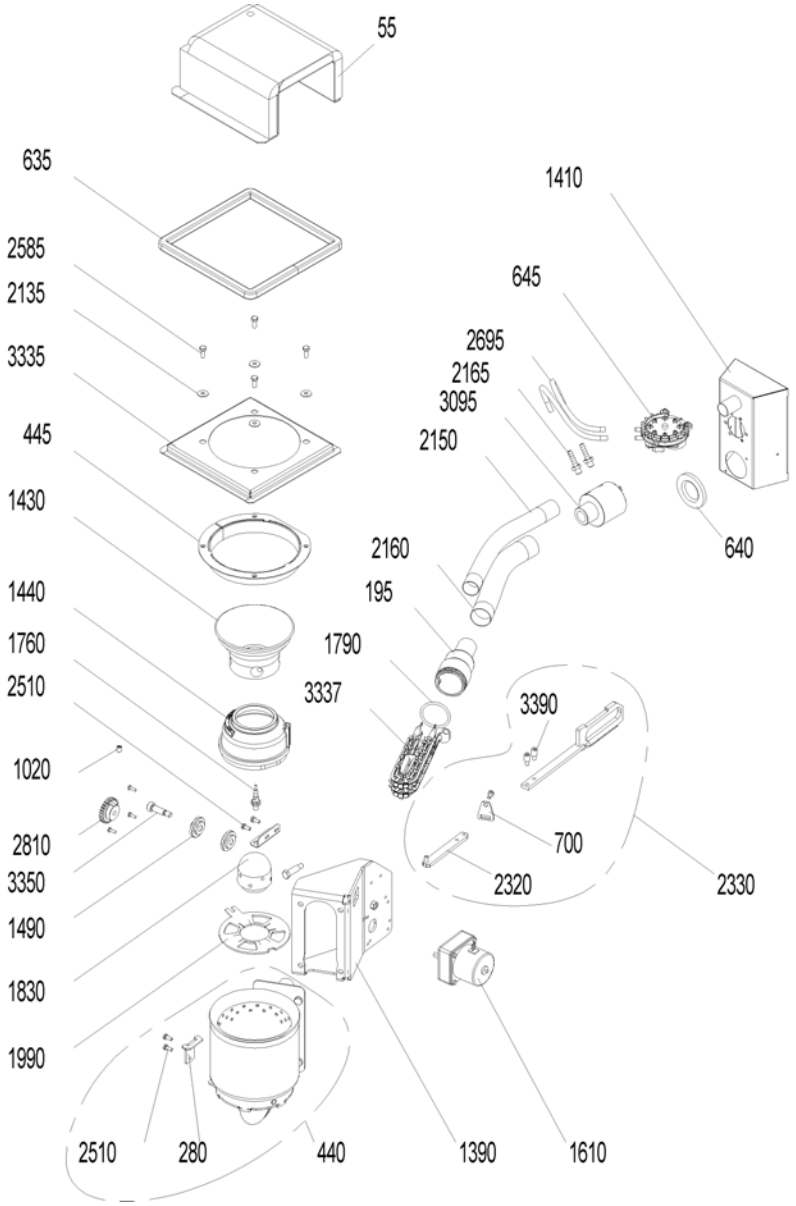
55
635
2585
2135
3335
445
1430
1440
1760
2510
1020
2810
3350
1490
1830
1990
2510
280
440
1390
1610
1410
645
2695
2165
3095
2150
2160
195
1790
3337
3390
700
2320
2330
640

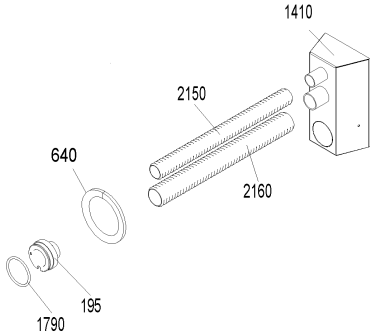
1410
2150
640
2160
195
1790

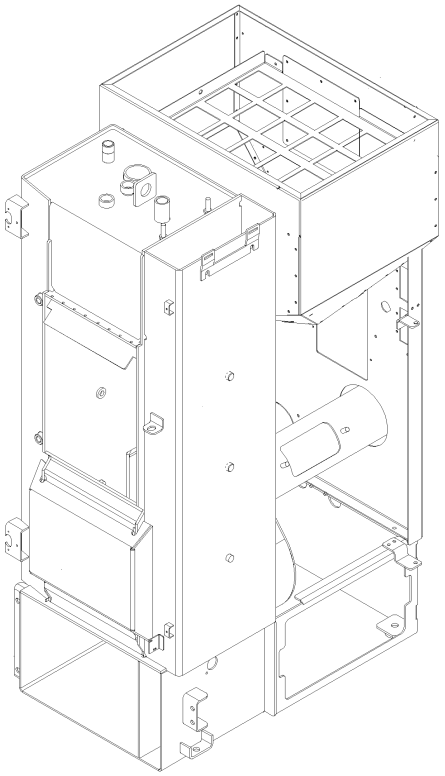

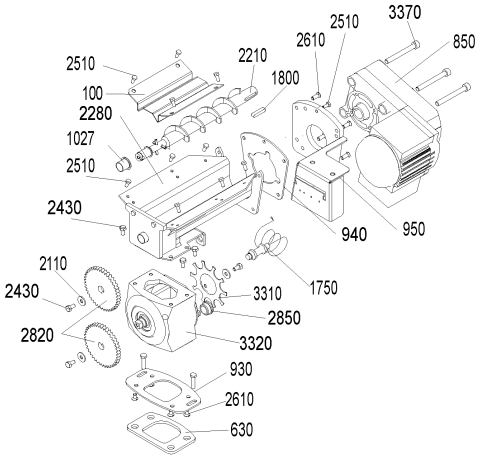
3370
2510
2610
850
2510
2210
1800
100
2280
1027
2510
2430
940
950
2110
2430
1750
3310
2850
2820
3320
930
2610
630

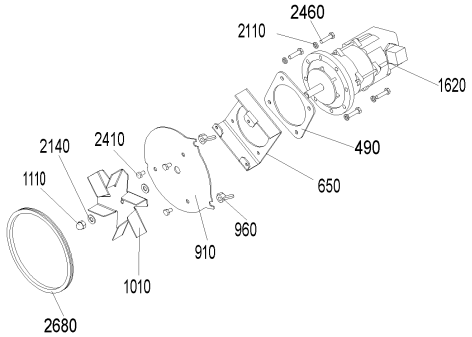
2460
2110
1620
490
2140
2410
650
1110
960
910
1010
2680

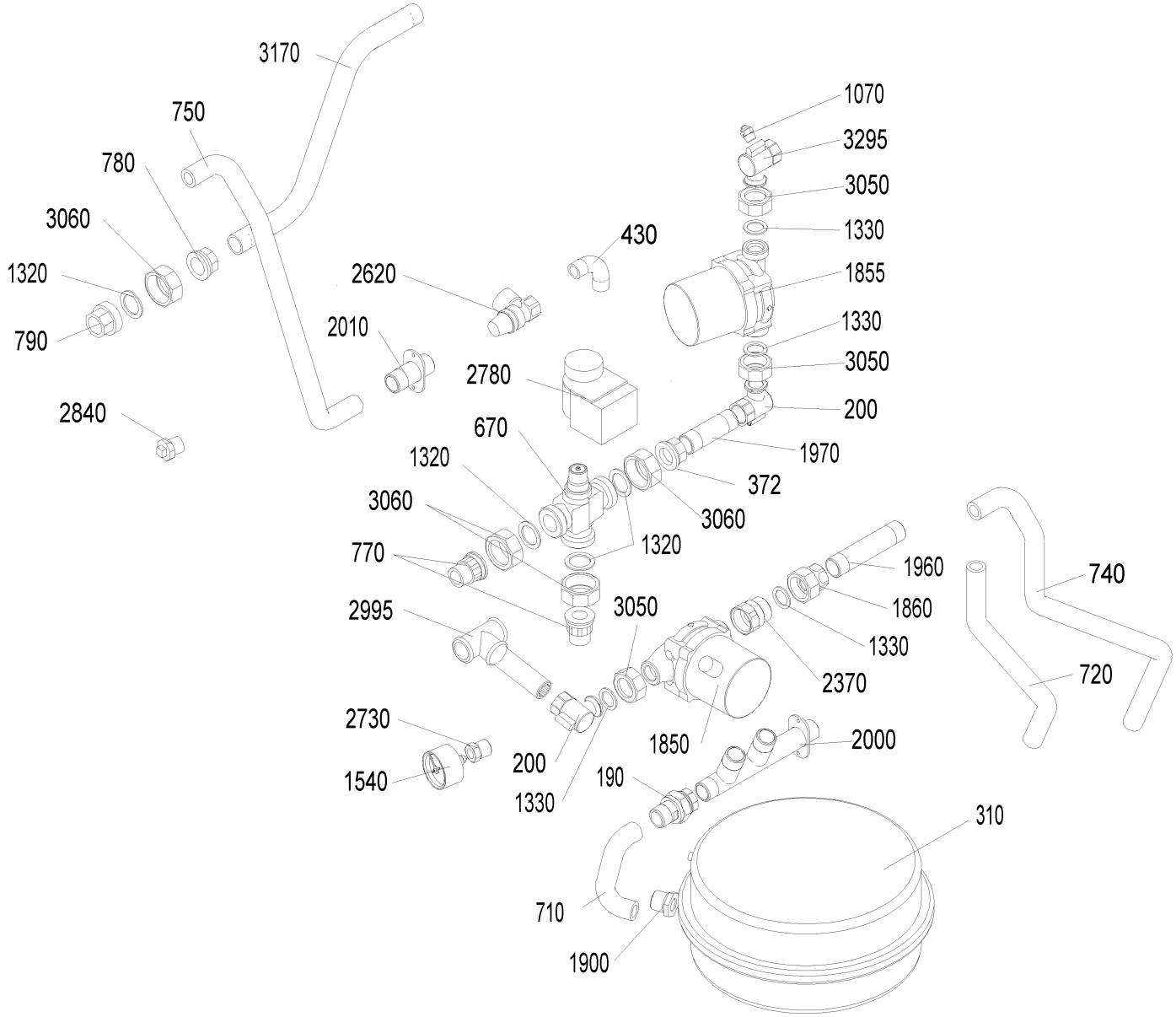
3170
750
780
3060
1320
790
2840
2620
2010
430
2780
670
1320
3060
770
2995
2730
1540
1070
3295
3050
1330
1855
1330
3050
200
1970
372
3060
1320
3050
200
1330
1850
190
2000
1960
1860
1330
2370
740
720
310
710
1900

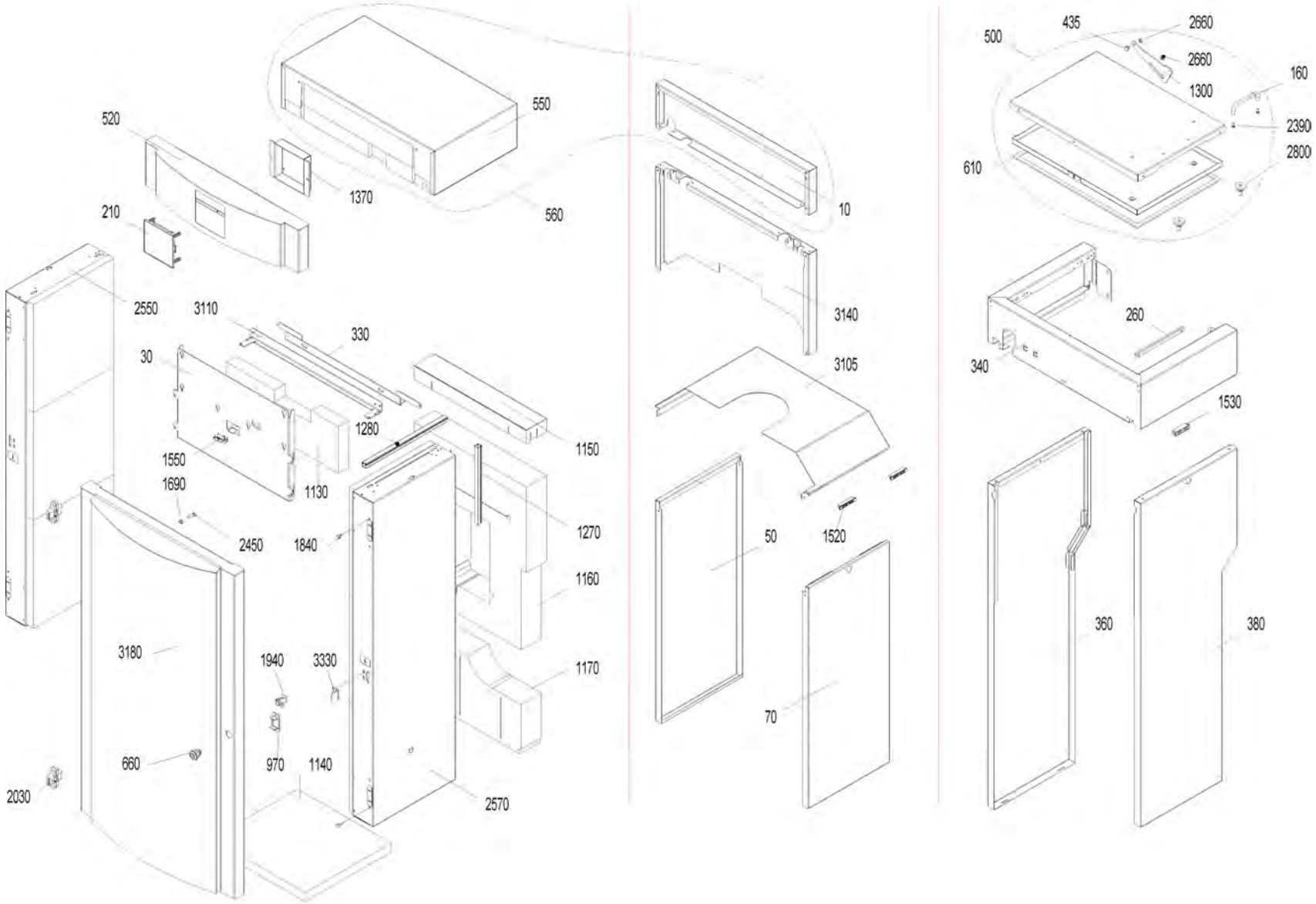
550
520
1370
560
210
2550
3110
330
30
1280
1150
1550
1690
1130
1270
2450
1840
1160
3180
1940
3330
1170
660
970
1140
2030
2570
10
3140
3105
50
1520
70
500
435
2660
2660
1300
160
2390
2800
610
260
340
1530
360
380

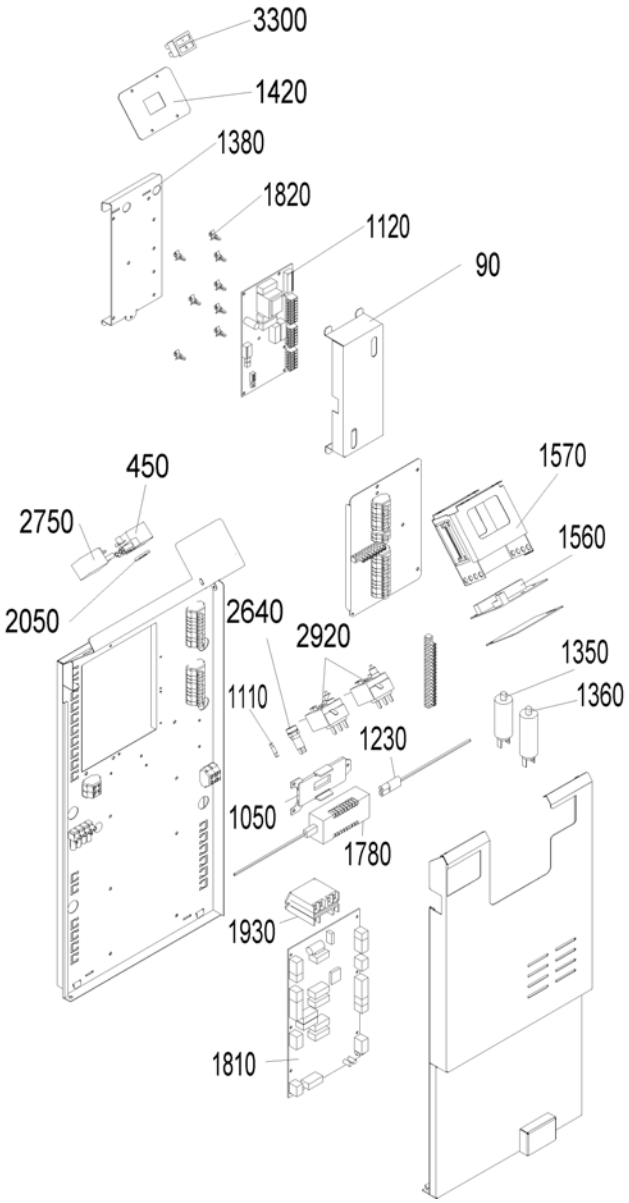
3300
1420
1380
1820
1120
90
450
2750
2050
2640
2920
1570
1560
1350
1360
1110
1230
1050
1780
1930
1810

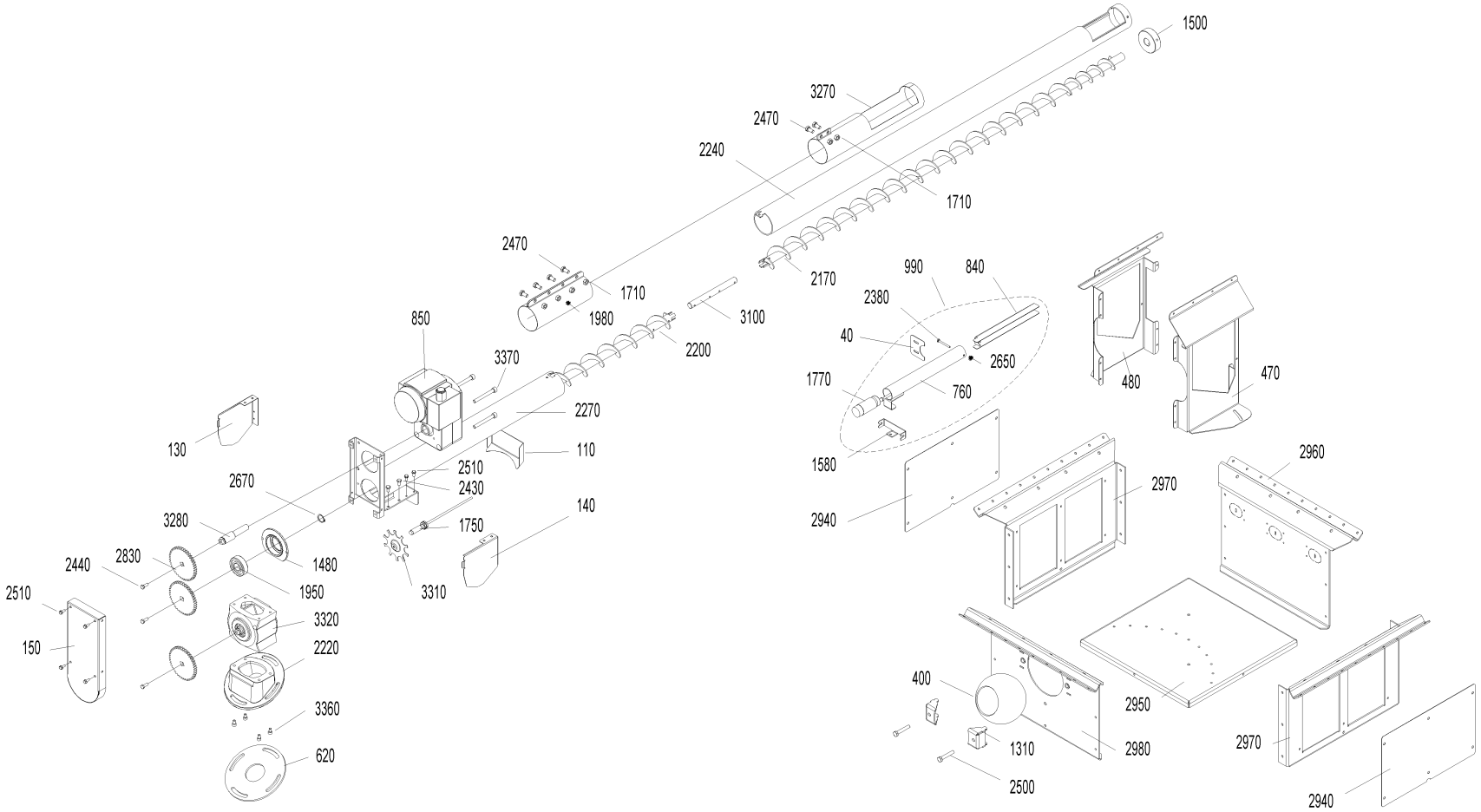
1500
3270
2470
2240
1710
2170
2470
1710
1980
2200
3100
850
3370
2270
110
130
2510
2430
2670
1750
140
3280
2830
2440
1480
1950
2510
3320
150
2220
3360
620
3310
990
840
2380
40
2650
1770
760
1580
2940
480
470
2960
2970
2950
400
1310
2980
2500
2970
2940

Item no.	Article no.	Description	Serialnumber from	Serialnumber t
5	044620	Tank cover plate for FireWIN, VarioWIN	0	9999999999999
10	046287	Rear cover plate, white for VarioWIN	0	9999999999999
10	046544	Rear cover plate, grey RAL7044 for VarioWIN	0	9999999999999
30	046281	Front cover plate for VarioWIN	0	9999999999999
40	046414	Cover, level indicator, funnel for VarioWIN	0	9999999999999
45	046174	Rear cover for VarioWIN, FireWIN	0	9999999999999
48	044626	Left cover for VarioWIN, FireWIN	0	9999999999999
50	046293	Left cover, white for VarioWIN	0	9999999999999
50	046547	Left cover, red for VarioWIN	0	9999999999999
60	044368	Right cover for VarioWIN, FireWIN	0	9999999999999
70	046505	Right cover, red for VarioWIN	0	9999999999999
70	046506	Right cover, white for VarioWIN	0	9999999999999
90	051690	Cover BUML incl. Sticker	0	9999999999999
100	044376	Auger cover for VarioWIN, FireWIN	0	9999999999999
110	046419	Auger cover 30° for VarioWIN	0	9999999999999
110	046420	Auger cover 20° for VarioWIN	0	9999999999999
130	046298	Auger cover, left for VarioWIN	0	9999999999999
140	046418	Auger cover, right for VarioWIN	0	9999999999999
145	044518	Base cover for VarioWIN, FireWIN	0	9999999999999
150	046417	Gear cover for VarioWIN	0	9999999999999
160	000477	Aluminium handle for VarioWIN	0	9999999999999
170	013804	Collar screw M8x27 for VarioWIN, FireWIN	0	9999999999999
180	012502	Collar screw	0	9999999999999
190	012091	Connection coupling 3/4“ with Aqua-Stop for male thread for VarioWIN, FireWIN	0	9999999999999
195	007647	Connection piece, primary air for VarioWIN, FireWIN	0	9999999999999
200	012063	Connection bracket 1“-3/4“ for VarioWIN, FireWIN	0	9999999999999
210	011986	InfoWIN plus HW B4 SW V 4.10 VarioWIN and FireWIN from lot 0	0	9999999999999
220	044925	Combustion chamber ash pan for VarioWIN	0	9999999999999
230	045622	Coasting surface ash pan, exclusive for VarioWIN, FireWIN	0	9999999999999
240	503366	Coasting surface ash pan, Classic/ Premium for VarioWIN, FireWIN	0	9999999999999
250	044895	Ash door, complete for VarioWIN, FireWIN	0	9999999999999
255	042743	Holder for cleaning equipments for VarioWIN, LogWIN Premium 180-505,SilvaWIN,BioWIN XL35-60,EasWIN Klassik/Premium 180	0	9999999999999
260	046410	Support, white for VarioWIN	0	9999999999999
260	046495	Support, grey for VarioWIN	0	9999999999999
280	045919	Driving rod seating bracket for VarioWIN, BioWIN 10-26 from batch 30, FireWIN	0	9999999999999
290	033432	Eyebolt similar to DIN 444 - B M10x50 - 4.6 - bright for VarioWIN, FireWIN, VestoWIN Premium 200-202, VestoWIN Klassik 170-220	0	9999999999999
300	033433	Eyebolt similar to DIN 444 - B M12x50 - 4.6 - bright for VarioWIN, FireWIN,EasyWIN Klassik/Premium 180,LogWIN Premium 180-505	0	9999999999999
310	003610	Expansion tank DXM 12 G3/8“ for FireWIN, VarioWIN	0	9999999999999
330	045766	Lower retaining bracket for VarioWIN	0	9999999999999
340	046402	Top container apron, white for VarioWIN	0	9999999999999
340	046483	Top container apron, grey for VarioWIN	0	9999999999999
360	046404	Bottom left container apron, white for VarioWIN	0	9999999999999
360	046487	Bottom left container apron, red for VarioWIN	0	9999999999999
380	046663	Bottom right container apron, red for VarioWIN	0	9999999999999
380	046664	Bottom right container apron, white for VarioWIN	0	9999999999999
390	019415	Wing nut DIN 315 - M8 - brass for FAX, FireWIN, VarioWIN, BioWIN 10, EasyWIN Premium 180	0	9999999999999
400	046283	Sheet metal ball for VarioWIN	0	9999999999999
410	019836	Cylinder screw 2.9x16 (not illustrated)	0	9999999999999
420	018139	Cylinder screw 4.2x13 DIN7981SP (not illustrated)	0	9999999999999
430	002519	Long bend - 1/2“ - No. 3 - black for VarioWIN, FireWIN, GKX	0	9999999999999
435	033091	Bolt DIN 1445 - 8h11 x 4 x 10 - St - galvanised for VarioWIN, FireWIN, BioWIN 10-26, BioWIN XL 35-60	0	9999999999999

Item no.	Article no.	Description	Serialnumber from	Serialnumber
440	046574	Burner for FireWIN from batch 10, VarioWIN - For VarioWIN the cover of the secondary-air-tube has to be removed! -	0	9999999999999
450	070324	Socket, 3-pin, black	0	9999999999999
460	009792	Socket, 4-pin, black for VarioWIN	0	9999999999999
470	046440	Auger roof sheeting, left for VarioWIN	0	9999999999999
480	046445	Auger roof sheeting, right for VarioWIN	0	9999999999999
490	031244	Blower motor damping mat material: S400-003 for FireWIN, VarioWIN	0	9999999999999
500	046503	Container cover, complete, grey for VarioWIN	0	9999999999999
500	046504	Container cover, complete, white for VarioWIN	0	9999999999999
520	046446	InfoWIN cover, white for VarioWIN	0	9999999999999
520	046540	InfoWIN cover, grey for VarioWIN	0	9999999999999
540	044477	heating surface cover for FireWIN, VarioWIN	0	9999999999999
550	046514	Top cover, white for VarioWIN	0	9999999999999
550	046515	Top cover, grey for VarioWIN	0	9999999999999
560	046666	Top cover with rear cover, white for VarioWIN	0	9999999999999
560	046667	Top cover with rear cover, grey for VarioWIN	0	9999999999999
590	044516	Rear wall cover for FireWIN, VarioWIN	0	9999999999999
600	045096	Heating door rope seal (glass fibre packing 16 x 10) for VarioWIN	0	9999999999999
605	046998	Ash door rope seal (glass fibre packing 16 x 16) for VarioWIN	0	9999999999999
610	046665	Container seal	0	9999999999999
620	031269	Downpipe seal 165 X 53 X 5 mm for Vario WIN	0	9999999999999
630	031241	Downpipe seal 115.5x73.7x5 for FireWIN, VarioWIN	0	9999999999999
640	044905	Seal section 461 0069 for FireWIN, VarioWIN	0	9999999999999
650	044490	Spacer plate for FireWIN, VarioWIN	0	9999999999999
660	012256	Turning bolt	0	9999999999999
670	012092	Three-way valve VXG 48.20 3/4" for FireWIN, VarioWIN	0	9999999999999
680	002453	Compression spring 1DXDA10, 3X20X6,5 female thread IG WST.1.4310 for FireWIN, VarioWIN	0	9999999999999
690	046171	Cleaning linkage pressure piece for FireWIN from batch 10, VarioWIN	0	9999999999999
700	046160	Driving rod feed-through for FireWIN from batch 10, VarioWIN	0	9999999999999
710	000214	Stainless steel corrugated tube, DN16x145 mm, 2 union nuts 3/4“, seals for VarioWIN, FireWIN	0	9999999999999
720	000139	Stainless steel corrugated tube, DN16x400 mm, 2 union nuts 3/4“, seals for VarioWIN	0	9999999999999
740	006213	Stainless steel corrugated tube, DN16x600 mm, 2 union nuts 3/4“, seals for VarioWIN, FireWIN	0	9999999999999
750	000140	Stainless steel corrugated tube, DN16x680 mm, 2 union nuts 3/4“, seals for VarioWIN, FireWIN	0	9999999999999
760	046269	Insertion tube for VarioWIN	0	9999999999999
770	044202	Insert 3/4“ - No. 371 - flat-turned for FireWIN, VarioWIN	0	9999999999999
780	011762	Insert 3/4“ - No. 372 - black for VarioWIN, FireWIN	0	9999999999999
782	033097	Nut (low) DIN 439 - B M12 - 04 - galvanised	0	9999999999999
790	000109	Screw-in part 3/4“ - No. 370 - black for VarioWIN, FireWIN	0	9999999999999
800	012504	Ash compactor eccentric disc for FireWIN, VarioWIN	0	9999999999999
810	046463	Down chute compl. VarioWIN	0	9999999999999
815	045038	Down channel for FireWIN, VarioWIN	0	9999999999999
820	000191	KSL029 Forming screw, diameter 8x26/M5 for NBS,OEX,ASN,PMX,fittings cabinet Vesto 200, VarioWIN	0	9999999999999
830	017029	Spring shackle for VarioWIN	0	9999999999999
840	045916	Proximity switch attachment for VarioWIN	0	9999999999999
850	007106	Gearmotor with connection cable, type: FGA 53 / 4DEKG 56 # for VarioWIN, FireWIN from batch 6, BioWIN XL 35-60	0	9999999999999
860	016780	Cylinder screw M4x12 DIN 7985	0	9999999999999
870	016950	Cyl. screw M5x12, galvanised, with cross slot, ISO 7045 (DIN 7985) for VarioWIN, FireWIN	0	9999999999999
880	017094	WERL056 Flat brush 1 1/2" NO. 72753 for FireWIN, VarioWIN, BioWIN10-26, BioWIN XL 35-60	0	9999999999999
890	045615	Ash compactor flange for FireWIN, VarioWIN	0	9999999999999
900	051479	Sensor pipe flange FireWIN, VarioWIN	0	9999999999999
910	044489	Blower flange for FireWIN, VarioWIN	0	9999999999999
920	044372	Auger flange for FireWIN, VarioWIN	0	9999999999999

Item no.	Article no.	Description	Serialnumber from	Serialnumber t
930	044487	Rotary feeder flange for FireWIN, VarioWIN	0	9999999999999
940	031243	Auger motor flange seal (S400-003) for FireWIN, VarioWIN	0	9999999999999
950	045986	Auger motor flange plate for FireWIN from batch 6, VarioWIN	0	9999999999999
960	019415	Wing nut DIN 315 - M8 - brass for FAX, FireWIN, VarioWIN, BioWIN 10, EasyWIN Premium 180	0	9999999999999
970	046473	Guide plate for VarioWIN	0	9999999999999
980	045614	Ash compactor guide plate for FireWIN, VarioWIN	0	9999999999999
990	046270	Sheet steel tank fill level switch for VarioWIN	0	9999999999999
1000	012501	Fork head M8xL1 16mm / L2 32mm for FireWIN, VarioWIN	0	9999999999999
1010	046471	Blower wheel for FireWIN from batch 10, VarioWIN	0	9999999999999
1020	033112	Setscrew M8x10 DIN916	0	9999999999999
1027	012508	Friction bearing with connector	0	9999999999999
1040	001438	Semicircular ring for corrugated tube 3/4“ for FireWIN, NBE, HMX, VarioWIN	0	9999999999999
1045	046262	Left retaining plate for VarioWIN	0	9999999999999
1048	046260	Right retaining plate for VarioWIN	0	9999999999999
1050	002050	Power supply unit 002049 holding plate for VarioWIN, FireWIN, BioWIN 10-26, BioWIN XL 35-60, LogWIN Premium 180-505	0	9999999999999
1060	004870	EKX901 Manually operated bleeder 1/2" with slotted screw for AccuWIN, AccuWIN Solar, VarioWIN, FireWIN	0	9999999999999
1070	001058	ASL001 Manually operated bleeder VFR 1/4“ for OE/KN/M,GKX,ASN,ASL,OEX, MIRA, fittings cabinet Vesto 200, VarioWIN, FireWIN	0	9999999999999
1080	045613	Coasting surface lever for NHF for ash compactor for FireWIN, VestoWIN, VarioWIN	0	9999999999999
1090	046565	Heating door complete for VarioWIN	0	9999999999999
1100	044979	Heating door for VarioWIN	0	9999999999999
1110	025967	Cap nut DIN 1587 - M8 - 6 - galvanised for FAX, FireWIN, VarioWIN, BioWIN 10-26, EasyWIN Klassik/Premium 180	0	9999999999999
1120	051541	Modification set BUML TTL to BUML TTL 2Z	0	9999999999999
1130	011139	Front cover plate insulation 40x157x440 for VarioWIN	0	9999999999999
1140	011138	Floor insulation 30x337x367 for VarioWIN	0	9999999999999
1150	011137	Top rear insulation 2 80x46x440 for VarioWIN	0	9999999999999
1160	011140	Top rear insulation 1 80x440x562,5 for VarioWIN	0	9999999999999
1170	011144	Bottom rear insulation 80x232x388 for VarioWIN	0	9999999999999
1180	044994	Insulating panel for VarioWIN	0	9999999999999
1190	044722	Cable for combustion chamber door X15 for FireWIN, VarioWIN	0	9999999999999
1200	000395	Three-way valve cable for FireWIN,GMX,MIRA,GENIO/MultiWIN,VarioWIN	0	9999999999999
1210	044730	Cable for shaker motor limit X14 switch for FireWIN, VarioWIN	0	9999999999999
1220	044729	Cable for ash compactor motor X7 for FireWIN, VarioWIN	0	9999999999999
1230	002051	Power supply unit cable FRIWO (primary power line) for VarioWIN, FireWIN, BioWIN 10-26, BioWIN XL 35-60, LogWIN Premium 180-505	0	9999999999999
1240	044727	Cable for shaker motor X5 for FireWIN, VarioWIN	0	9999999999999
1250	044728	Cable for ignition element X6 for FireWIN, VarioWIN	0	9999999999999
1255	053643	Cable - ignition element for BW1, BW2, FireWIN and VarioWIN	0	9999999999999
1260	009542	Cable feed-through	0	9999999999999
1270	046508	Rear cable duct 15x15x260 mm for VarioWIN	0	9999999999999
1280	046507	Top cable duct 15x15x320 mm for VarioWIN	0	9999999999999
1290	004385	KFE cock	0	9999999999999
1300	046415	Folding support for VarioWIN	0	9999999999999
1310	046433	Clamp for VarioWIN	0	9999999999999
1320	016179	Gasket 1“ 44 x 3 x 2 mm for VarioWIN, FireWIN	0	9999999999999
1330	016152	ZH 094 Klingerit seal 1/2" (30x21x2mm) for AccuWIN, AccuWIN Solar, VarioWIN, FireWIN	0	9999999999999
1340	003019	Seal flange combustion chamber sensor VarioWIN and FireWIN	0	9999999999999
1340	016160	Klingerit seal 3/4“ (38x27x2 mm) for VarioWIN, FireWIN	0	9999999999999
1350	007330	Condenser for motor MAB 500V, 3µF for HMX,PMX,SWK,BioWIN10-26,FireWIN,VarioWIN,BioWIN XL 35-60, EasyWIN Premium 180,LogWIN Premiu	0	9999999999999
1360	007332	Condenser 4µF for auger motor for PMX150,BioWIN10/15,FireWIN,VarioWIN, BioWIN XL 35-60	0	9999999999999
1365	045035	Down channel bracket for VarioWIN	0	9999999999999
1370	046254	InfoWIN bracket for VarioWIN	0	9999999999999
1380	045761	BUML interface bracket for FireWIN, VarioWIN	0	9999999999999

Item no.	Article no.	Description	Serialnumber from	Serialnumber
1390	045215	Shake-out motor bracket for BioWIN 10-26 from batch 30, FireWIN from batch 10, VarioWIN	0	9999999999999
1400	045001	Mains power plug bracket for VarioWIN	0	9999999999999
1410	046456	Bracket, independent of room air for VarioWIN	0	9999999999999
1420	044172	Rocker switch bracket for FireWIN, VarioWIN	0	9999999999999
1430	007310	Cone, top part - split cone from batch 30 - for BioWIN10, VarioWIN	0	9999999999999
1440	007312	Cone, bottom part - cone Øi=71 - for VarioWIN	0	9999999999999
1450	044619	Heating surface cleaning crank for FireWIN, VarioWIN	0	9999999999999
1460	045619	Ash compactor bearing arm for FireWIN, VarioWIN	0	9999999999999
1470	005111	Heating surface cleaning bearing block for FireWIN, VestoWIN Klassik 170-220, VarioWIN, VestoWIN Premium 200-202	0	9999999999999
1480	007086	Bearing bush, diameter 92x17mm for VarioWIN, BioWIN XL 35-60	0	9999999999999
1490	007125	Bearing for vibrating drive	0	9999999999999
1500	007090	Auger bearing diameter 62.5x20 mm for VarioWIN	0	9999999999999
1510	002296	Long nipple 3/4“x60 mm, brass for VarioWIN, FireWIN	0	9999999999999
1520	001759	Magnetic lock No. 246.41 for GKW,NBE,GKX,GWX,GTX,PMX,HMX,FireWIN,VarioWIN, BioWIN 10-26	0	9999999999999
1530	001760	Magnetic lock, black - VW, LWP18-50, LWK	0	9999999999999
1540	001066	ASL002 Pressure gauge TYP101 Ø50 for OEX,OE/KN/M,GKW,ASN,ASL,GKX,GKA/E,MIRA,FireWIN,VarioWIN,fittings cabinet Vesto 200	0	9999999999999
1550	009277	Air control microswitch	0	9999999999999
1560	044572	Module connection PCB for FireWIN, VarioWIN	0	9999999999999
1570	041036	Module guide complete for FireWIN, VarioWIN	0	9999999999999
1580	046394	Proximity switch mounting bracket for VarioWIN	0	9999999999999
1590	046972	Ash compaction motor, coasting surface cleaning for FireWIN, VarioWIN	0	9999999999999
1610	012530	Grate shaking motor mounted replacement: 012517 for BioWIN10-26, FireWIN, VarioWIN	0	9999999999999
1620	044158	Blower motor with cable for blower for SilvaWIN, LogWIN, FireWIN, BioWIN XL 35-60, EasyWIN Premium 180, LogWIN Premium 180-505	0	9999999999999
1630	044944	Auger motor mounted replacement ET: 045907 for FireWIN, VarioWIN	0	9999999999999
1640	031156	Hexagon nut M10 DIN 439	0	9999999999999
1650	033097	Nut (low) DIN 439 - B M12 - 04 - galvanised	0	9999999999999
1660	016624	Nut DIN 934 - M12 - 8 - galvanised for VarioWIN, FireWIN, EasyWIN Klassik/Premium 180, LogWIN Premium 180-505	0	9999999999999
1670	016551	Hexagon nut M3 DIN 934	0	9999999999999
1680	016586	Hexagon nut M5 DIN 934	0	9999999999999
1690	016594	Hexagon nut M6 DIN 934	0	9999999999999
1700	016596	Nut DIN 934 - M6 - A2 for VarioWIN, FireWIN, BioWIN10-26, BioWIN XL 35-60	0	9999999999999
1710	015992	Nut M8 DIN 934 V2 - LogWIN Klassik pellet ready	0	9999999999999
1720	016565	Hexagon nut M5 with flange and gearing (not illustrated)	0	9999999999999
1730	045612	Ash compactor coasting surface plate, front for FireWIN, VarioWIN	0	9999999999999
1740	045611	Ash compactor coasting surface plate, rear for FireWIN, VarioWIN	0	9999999999999
1750	006832	Proximity switch M12, inductive	0	9999999999999
1760	009342	Proximity switch, inductive M8x1 for VarioWIN, FireWIN, BioWIN 10-26	0	9999999999999
1770	006821	Proximity switch, capacitive	0	9999999999999
1780	051645	Power supply unit 12V	0	9999999999999
1790	006849	O-ring FPM70 45 x 4	0	9999999999999
1800	006766	Feather key, without tightening DIN6885 A 6x6x28 mm for PMX, BioWIN10-26, FireWIN, VarioWIN, BioWIN XL 35-60	0	9999999999999
1810	011997	de: Platine FMP -V V6.50 VarioWIN	0	9999999999999
1820	007609	PCB holder	0	9999999999999
1830	007210	Primary air pin	0	9999999999999
1840	000299	Silicone buffer	0	9999999999999
1850	006399	HUPA pump 15-4.0 U130mm for AccuWIN, AccuWIN Solar, VarioWIN, FireWIN	0	9999999999999
1855	006419	Pump HEP 15-4.0 E 130 mm - Energy savings pump for FireWIN, VarioWIN	0	9999999999999
1860	012139	Pump screw connection DN3/4“-1“ - brass for FireWIN, VarioWIN	0	9999999999999
1870	044780	Exhaust pipe cleaning cover for FireWIN, VarioWIN	0	9999999999999
1880	044912	Clearer flat, complete for FireWIN, VarioWIN	0	9999999999999
1890	007655	Knurled nut with through-hole thread M5 SW for VarioWIN, FireWIN,BioWIN10-26	0	9999999999999

Item no.	Article no.	Description	Serialnumber from	Serialnumber t
1895	002023	Reduction nipple 1“-3/4“ for VarioWIN	0	9999999999999
1900	045025	Reduction nipple 3/8“-3/4“, turned for FireWIN, VarioWIN	0	9999999999999
1910	046158	Cleaning linkage, complete for FireWIN from batch 10, VarioWIN	0	9999999999999
1920	046570	Cleaning tool / removal device for cone for BioWIN 10 from batch30, VarioWIN	0	9999999999999
1930	005025	Power relay OMRON G7L-2A-BUB 200/240AC for PMX,BioWIN XL, BioWIN10-26,FireWIN,VarioWIN, BioWIN XL 35-60	0	9999999999999
1940	046474	Catch for panelling for VarioWIN	0	9999999999999
1950	012499	Grooved ball bearing	0	9999999999999
1960	045023	Hot water tank flow pipe 3/4“x118.5 mm - black for FireWIN, VarioWIN	0	9999999999999
1970	044198	Pipe for mixer group 3/4“x81.5 mm - black for FireWIN, VarioWIN	0	9999999999999
1980	046437	Pipe clamp,Ø 68x200 for VarioWIN	0	9999999999999
1990	045212	Grate plate, top for BioWIN 10/15 from batch 30, FireWIN from batch 10, VarioWIN	0	9999999999999
2000	044205	Return complete for FireWIN, VarioWIN	0	9999999999999
2010	044201	Return pipe for FireWIN, VarioWIN	0	9999999999999
2020	046282	Rear wall for VarioWIN	0	9999999999999
2030	007103	Cladding door hinge for LogWIN Premium 180-505, VarioWIN, BioWIN XL 35-60	0	9999999999999
2040	018058	U-washer	0	9999999999999
2050	017183	U-Washer DIN 125B - M12 - galvanised for VarioWIN, FireWIN, BioWIN XL 35-60	0	9999999999999
2060	024765	Washer DIN 125 - 5 - galvanised for VarioWIN	0	9999999999999
2070	024766	Washer DIN 125 - 6 - galvanised for VarioWIN	0	9999999999999
2080	024767	Washer DIN 125 - M8 - galvanised, ISO 7089 for VarioWIN, BioWIN 10-26, BioWIN XL 35-60, EasyWIN Premium 180	0	9999999999999
2090	021474	Disc 3 DIN134	0	9999999999999
2100	018309	Disc 5 DIN134	0	9999999999999
2110	020540	U-Washer DIN 134 - M6 - galvanised for VarioWIN, FireWIN	0	9999999999999
2120	018066	Washer DIN 134 - 8 - galvanised for VarioWIN	0	9999999999999
2130	024780	Disc 10 ISO7089	0	9999999999999
2135	031753	Disc 6 ISO 7093	0	9999999999999
2140	031755	Disc 8 ISO 7093	0	9999999999999
2150	016025	Silicone hose PU1, diameter 25x320, secondary air, independent of room air for FireWIN, VarioWIN	0	9999999999999
2160	016026	Silicone hose SG1M, diameter 32x330, primary air, independent of room air for FireWIN, VarioWIN	0	9999999999999
2170	046239	Auger 1307 mm for VarioWIN	0	9999999999999
2170	046240	Auger 761 mm for VarioWIN	0	9999999999999
2170	046241	Auger 1853 mm for VarioWIN	0	9999999999999
2200	045093	Direct auger for VarioWIN	0	9999999999999
2210	044612	Daily use container auger for FireWIN, VarioWIN	0	9999999999999
2220	012520	Auger flange 30° pour VarioWIN	0	9999999999999
2220	012529	Auger flange 20° for VarioWIN	0	9999999999999
2240	046441	Auger tube 773,5 mm for VarioWIN	0	9999999999999
2240	046465	Auger tube 1320 mm for VarioWIN	0	9999999999999
2240	046466	Auger tube 1865 mm for VarioWIN	0	9999999999999
2270	045094	Direct auger tube for VarioWIN	0	9999999999999
2280	044896	Auger tube with friction bearing for daily use container, cpl., mounted for FireWIN, VarioWIN	0	9999999999999
2290	009219	Screw door handle bearing M12 (WAF17/30) - galvanised for HMX, BioWIN10-26, FireWIN, VarioWIN, EasyWIN Klassik/Premium 180	0	9999999999999
2300	045076	Screw M6 (with U-washer and nut) for heating surface cleaning complete for PMX, BioWIN10-26, FireWIN, VarioWIN	0	9999999999999
2320	045223	Inner driving rod for BioWIN 10-26 from batch 30, VarioWIN, FireWIN	0	9999999999999
2330	045232	Driving rod, complete for BioWIN10-26 à partir de lot 30 , FireWIn à partir de lot 10, VarioWIN	0	9999999999999
2340	046090	Container protective grille for VarioWIN	0	9999999999999
2350	041498	Protective tube for exhaust gas sensor	0	9999999999999
2360	045617	Swivel shaft complete, ash compactor for FireWIN, VarioWIN	0	9999999999999
2370	012140	Gravity brake SBM 3/4“ G1 IG/AG for VarioWIN	0	9999999999999
2380	016752	Hexagon screw DIN 933 - M4x40 - 8.8 - galvanised for VarioWIN	0	9999999999999
2390	016756	Hexagon screw M5x10 DIN 933	0	9999999999999

Item no.	Article no.	Description	Serialnumber from	Serialnumber t
2400	017020	Hexagon screw Niro DIN 933 - M5x12 - A2 for HMX, FireWIN, VarioWIN	0	9999999999999
2410	015059	Hexagon screw DIN 933 - M5x35 - 8.8 - galvanised for VarioWIN, FireWIN	0	9999999999999
2420	015026	Hexagon screw DIN 933 - M6x10 - 8.8 - galvanised for VarioWIN, FireWIN	0	9999999999999
2430	017051	Hexagon screw M6x12 DIN 933 (not illustrated)	0	9999999999999
2440	024759	Hexagon screw DIN 933 - M6x16 - 8.8 - galvanised for VarioWIN	0	9999999999999
2450	015471	Hexagon screw M6x20 DIN 933	0	9999999999999
2460	015041	Hexagon screw DIN 933 - M6x25 - 8.8 - galvanised for VarioWIN, FireWIN	0	9999999999999
2470	015134	Hexagon screw M8x16 DIN 933	0	9999999999999
2480	017086	Hexagon screw M8x20 DIN 933 (not illustrated)	0	9999999999999
2490	017873	Hexagon screw DIN 933 - M8x20 - A2 for VarioWIN, FireWIN	0	9999999999999
2500	032654	Hexagon screw DIN 933 - M8x45 - 8.8 - galvanised for VarioWIN	0	9999999999999
2510	031545	Hexagon screw M5x12 DIN 7500 (not ilustrated)	0	9999999999999
2520	031549	Hexagon screw M6x12 DIN 7500	0	9999999999999
2530	017882	Thread-rolling hexagon screw DIN 7500 - M8x16 TT - galvanised for VarioWIN, EasyWIN Klassik/Premium 180	0	9999999999999
2540	027392	Hexagon pin key with T-handle 10x200 for VarioWIN, BioWIN XL 35-60	0	9999999999999
2550	046510	Left side panel, white for VarioWIN	0	9999999999999
2550	046511	Left side panel, red for VarioWIN	0	9999999999999
2570	046512	Right side panel, white for VarioWIN	0	9999999999999
2570	046513	Right side panel, red for VarioWIN	0	9999999999999
2590	017222	Countersinking screw DIN 965 - M3x12 - galvanised with cross slot for VarioWIN, FireWIN, EasyWIN Klassik/Premium 180	0	9999999999999
2600	017223	Countersinking screw DIN 965 - M4x70 - galvanised with cross slot for VarioWIN, FireWIN	0	9999999999999
2610	016863	Countersinking screw M6x16	0	9999999999999
2620	001031	ASL004 Safety valve 1/2“ 2.5 bar for GWX,OEX,OE/KN/M,ASL,GKW,GTX,ASN,GKA/E,MIRA,FireWIN,Vesto Art.Nr.:49292, VarioWIN, fittings ca	0	9999999999999
2630	003228	6.3A fuse (not illustrated)	0	9999999999999
2640	003663	Fuse holder	0	9999999999999
2650	016724	Lock nut DIN 985 - M4 - galvanised for VarioWIN	0	9999999999999
2660	016732	Lock nut DIN 985 - M6 - galvanised for VarioWIN	0	9999999999999
2670	016171	Locking ring Ø20x1.2	0	9999999999999
2680	009231	Silicone U-section, black 6x7,5 replacement:046057 (FW) or 046056 (HMX,PMX) for HMX, PMX, FireWIN, VarioWIN	0	9999999999999
2690	016073	WERV013 Silicone seal, black 310ml	0	9999999999999
2700	009540	Spatula	0	9999999999999
2710	018666	Clamping pin DIN 1481 - Ø4x20, for 3-way changeover unit for PMX, VarioWIN (* not illustrated), VestoWIN Premium 200-202, VestoWIN	0	9999999999999
2720	018184	Clamping pin DIN 1481 - Ø 5x14 for VarioWIN	0	9999999999999
2730	010286	ASL0021 Shut-off valve 1/4“ internal for pressure gauge R1/2“ for ASL/M,ÖR,SH,OEM,OEN,GTX,ASN,OEX,MIRA,FireWIN,fittings cabinet Ve	0	9999999999999
2740	005010	Steel collar 3/4“x50, black for VarioWIN, FireWIN	0	9999999999999
2750	070323	Plug, 3-pin, black	0	9999999999999
2760	070162	Plug, 4-pin, black for auger motor for VarioWIN, FireWIN	0	9999999999999
2770	070374	Plug, 7-pin (3-pin black, 4-pin brown) for blower motor for FireWIN, VarioWIN	0	9999999999999
2780	012240	Positioning drive SSY319 (230V, 50 Hz, 150s) for VarioWIN, FireWIN	0	9999999999999
2790	009992	Leg - JTB30 - M10x60 with slot for OEX, NBA, MIRA, VarioWIN, FireWIN	0	9999999999999
2800	009991	Leg - JTLO 38 - M8x16 for VarioWIN	0	9999999999999
2810	047115	Spur gear Z=28; m=1.5, for shake-out drive for FireWIN from batch 10, BioWIN 10/15 from batch 30, VarioWIN	0	9999999999999
2820	044613	Spur gear Z=32; m=2.5 for FireWIN from batch 6, VarioWIN - For units up to batch 5 009465 and 044612 must be replaced! -	0	9999999999999
2830	045771	Spur gear M2 Z45	0	9999999999999
2840	000353	KSN091 WAF Plug 1/2“ - no. 290 1- black No. 49304 for KSN, OEK, VestoWIN Klassik 170-220, FireWIN, VarioWIN	0	9999999999999
2850	012042	Plug 1/2“ MS, self-sealing, brass VER923 for VarioWIN, FireWIN	0	9999999999999
2860	044778	Jet protection plate, complete for FireWIN, VarioWIN	0	9999999999999
2870	006820	MES007 Immersion sensor (exhaust gas sensor) Pt 1000 for PMX, FireWIN, VarioWIN, BioWIN 10-26, BioWIN XL 35-60	0	9999999999999
2880	502186	MES009M Immersion sensor	0	9999999999999
2890	000027	KSL332 Immersion sleeve 130 mm long for KSL/ZHL,GKA/E,fittings cabinet Vesto200, VarioWIN	0	9999999999999
2900	012536	Disc spring DIN2093 - 16x8.2x0.6 for VarioWIN, FireWIN	0	9999999999999

Item no.	Article no.	Description	Serialnumber from	Serialnumber t
2910	007626	Thermocouple	0	9999999999999
2920	005672	Thermostat LS1+100-6U	0	9999999999999
2930	045623	Ash pan partition plate for FireWIN, VarioWIN	0	9999999999999
2940	046556	Funnel cover, left/right for VarioWIN	0	9999999999999
2950	039750	Funnel base for VarioWIN	0	9999999999999
2960	039754	Funnel side panel, rear for VarioWIN	0	9999999999999
2970	039752	Funnel side panel, right/left for VarioWIN	0	9999999999999
2980	039753	Funnel side panel, front for VarioWIN	0	9999999999999
2990	000092	T-piece 3/4“ - no. 130 - black for VarioWIN, FireWIN	0	9999999999999
2995	002024	T-piece, brass for FireWIN, VarioWINF	0	9999999999999
2997	003208	Grommet 10x17.5x1.2	0	9999999999999
3000	009553	Ash door handle rod for FireWIN, VarioWIN	0	9999999999999
3010	009549	Heating door handle rod for FireWIN, VarioWIN	0	9999999999999
3020	007083	Door stone for heating door for VarioWIN	0	9999999999999
3030	044588	Door locking bar for FireWIN, VarioWIN	0	9999999999999
3040	044591	Door locking latch for FireWIN, VarioWIN	0	9999999999999
3050	012052	Union nut 1/2“ - brass for VarioWIN, VestoWIN Klassik 170-220	0	9999999999999
3060	011770	Union nut 3/4“ - no. 374 - black WAX933 for VarioWIN, FireWIN	0	9999999999999
3070	006721	Baffle plate for FireWIN, VarioWIN	0	9999999999999
3080	006012	Silicone U-section, approx. 7x8.5 mm for VarioWIN, FireWIN, BioWIN 10-26	0	9999999999999
3090	000446	Valve insert for three-way valve 3/4“ from the VC-Serie, VCZZ6000B for VarioWIN, FireWIN	0	9999999999999
3100	012528	Auger connector, Ø15.9, h10x165 mm for VarioWIN	0	9999999999999
3105	046285	Connecting plate, coated, white for VarioWIN	0	9999999999999
3105	046546	Connecting plate, coated, red for VarioWIN	0	9999999999999
3110	046279	Connecting plate, top for VarioWIN	0	9999999999999
3120	044782	Connecting piece HFR, coasting surface cleaning for FireWIN, VarioWIN	0	9999999999999
3130	045610	Compactor plate, ash compaction for FireWIN, VarioWIN	0	9999999999999
3140	046290	Rear cladding, white for VarioWIN	0	9999999999999
3140	046545	Rear cladding, red for VarioWIN	0	9999999999999
3160	001306	Screw connection male thread D 1402, 3/4“x18 mm AG18 for FireWIN, VarioWIN	0	9999999999999
3170	007055	Flow pipe for FireWIN, VarioWIN	0	9999999999999
3180	046244	White panelling for VarioWIN	0	9999999999999
3180	046553	Red/grey panelling for VarioWIN	0	9999999999999
3200	009948	Wago terminal block 261; 2-pin WMS 1-2, 3-piece for VarioWIN, FireWIN	0	9999999999999
3210	006833	Wago terminal block 261; 4-pin "12V GND"	0	9999999999999
3220	006834	Wago terminal block 261; 4-pin "safety 1-4"	0	9999999999999
3230	009960	Wago terminal block 261; 8-pin 230V extnd. for VarioWIN, FireWIN, BioWIN10-26, BioWIN XL 35-60 (*not illustrated)	0	9999999999999
3240	009891	Wago terminal block 261; 11-pin safety 1-11 for FireWIN, VarioWIN	0	9999999999999
3250	009966	Wago terminal block 261; 11-pin orange extra-low voltage Extnd. for VarioWIN, FireWIN, BioWIN XL 35-60	0	9999999999999
3260	009968	Wago terminal block 261; 13-pin orange extra-low voltage (no. 1-13), for VarioWIN, FireWIN, BioWIN 10-26, BioWIN XL 35-60 (*not il	0	9999999999999
3270	046439	Maintenance pipe for VarioWIN	0	9999999999999
3280	012516	Shaft for motor, Ø = 20 h7x96.3mm for VarioWIN	0	9999999999999
3290	045216	Limit switch bracket for BioWIN 10-26 from batch 30, VarioWIN, FireWIN	0	9999999999999
3295	045024	Elbow adapter with G 14“ for VarioWIN	0	9999999999999
3300	005563	Rocker switch SW/GR 0-1	0	9999999999999
3310	044614	Toothed washer for FireWIN, BioWIN XL 35-60, VarioWIN	0	9999999999999
3320	009465	Rotary feeder for FireWIN from batch 6, VarioWIN	0	9999999999999
3330	046435	Centring plate for VarioWIN	0	9999999999999
3335	046274	Auxiliary sheet metal - direct auger for VarioWIN	0	9999999999999
3337	053851	de: Zündelement inkl. Kabel beigelegt.	0	9999999999999
3337	055201	Ignition element BioWIN10-26, FireWIN from lot 15, VarioWIN from lot 15 BioWIN XL, LWK	0	9999999999999

Item no.	Article no.	Description	Serialnumber from	Serialnumber t
3337	055202	Modifications set ignition	0	9999999999999
3340	009567	Cylindrical button 519-28-M10 for FireWIN, VarioWIN	0	9999999999999
3350	017048	Shoulder screw M8 10x25 ISO 7379	0	9999999999999
3360	033531	Cylinder-head screw, hexagon socket ISO 4762 - M6x10 - 8.8 - (DIN 912) for VarioWIN, BioWIN 10-26	0	9999999999999
3370	017049	Cylinder-head screw, hexagon socket ISO 4762 - M8x70 - 8.8 - galva. (DIN 912) for VarioWIN, FireWIN, BioWIN XL 35-60	0	9999999999999
3380	020117	Cylinder-head screw, hexagon socket ISO 4762 - M12x25 - 8.8 - galva. (DIN 912) for VarioWIN, FireWIN, BioWIN10-26, LogWIN Premium	0	9999999999999
3390	012537	Cylinder-head screw, hexagon socket M6x10, special version with tall head for VarioWIN, FireWIN	0	9999999999999

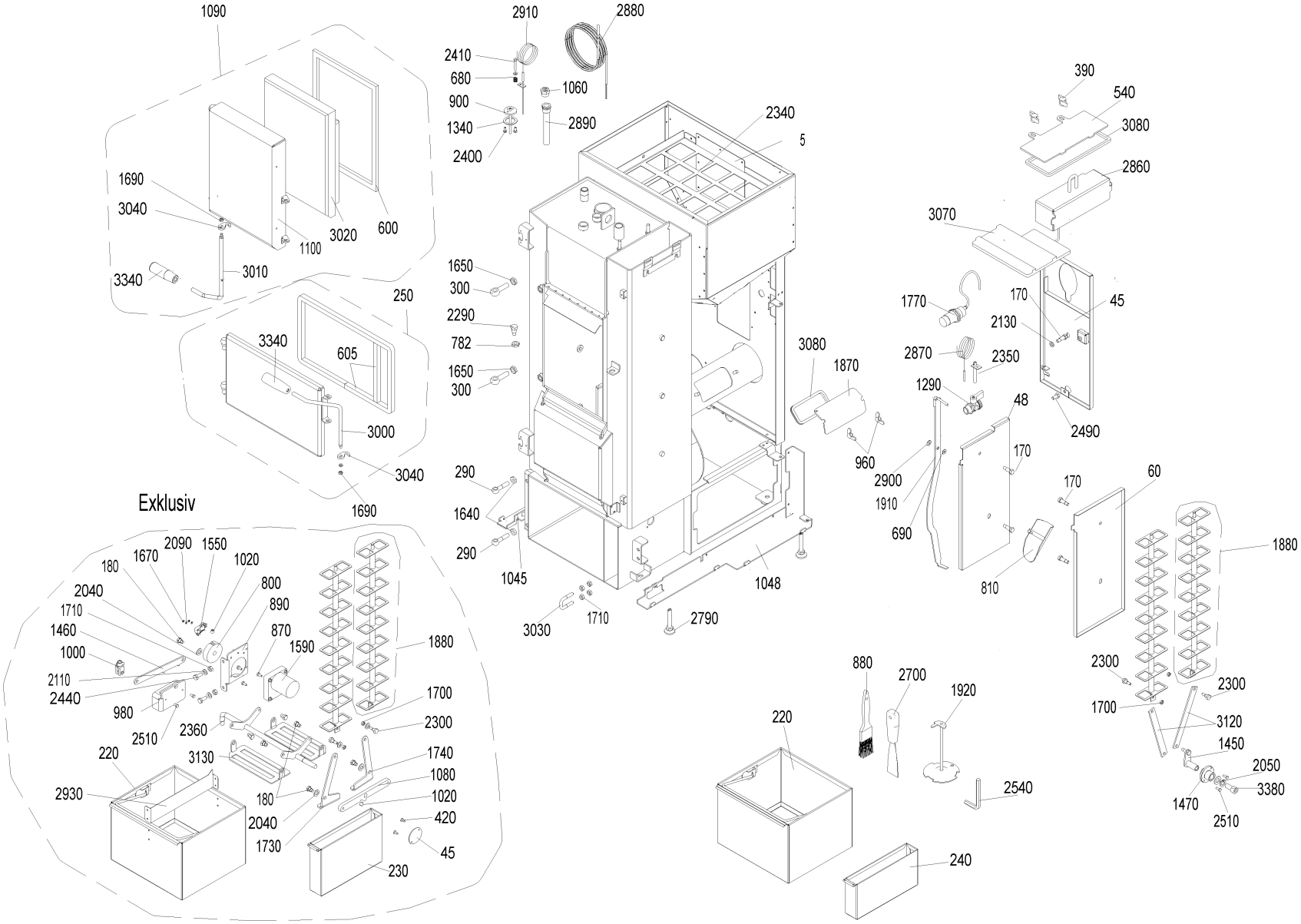
1090
1690
3040
3020
600
1100
3340
3010
250
3340
605
3000
3040
1690
Exklusiv
2090
1550
1670
1020
180
800
2040
890
1710
870
1460
1590
1000
1880
2110
1700
2440
2300
980
1740
2510
2360
1080
3130
1020
220
180
420
2930
2040
45
1730
230
2910
2880
2410
680
1060
900
2890
1340
2400
2340
5
1650
300
2290
782
1650
300
290
1640
290
1045
3030
1710
2790
1048
3080
1870
960
390
540
3080
2860
3070
1770
170
45
2130
2870
2350
1290
48
2490
2900
170
1910
690
810
170
60
1880
2300
2300
1700
3120
1450
2050
3380
1470
2510
880
2700
1920
220
2540
240

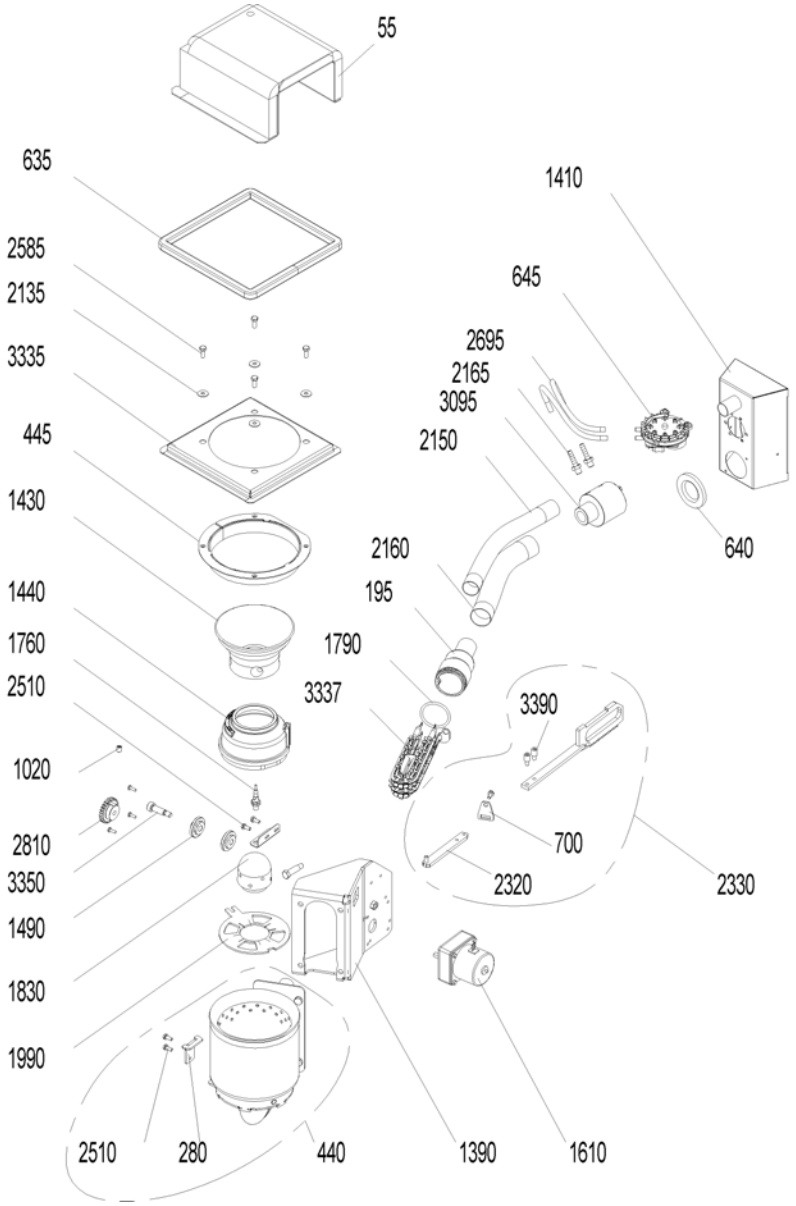
55
635
2585
2135
3335
445
1430
1440
1760
2510
1020
2810
3350
1490
1830
1990
2510
280
440
1390
1610
1410
645
2695
2165
3095
2150
2160
195
1790
3337
3390
700
2320
2330
640

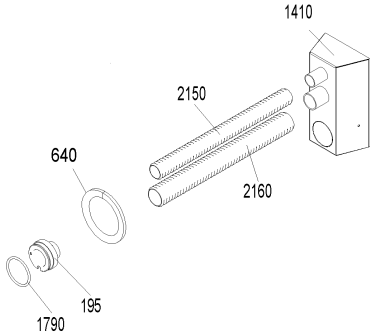
1410
2150
640
2160
195
1790

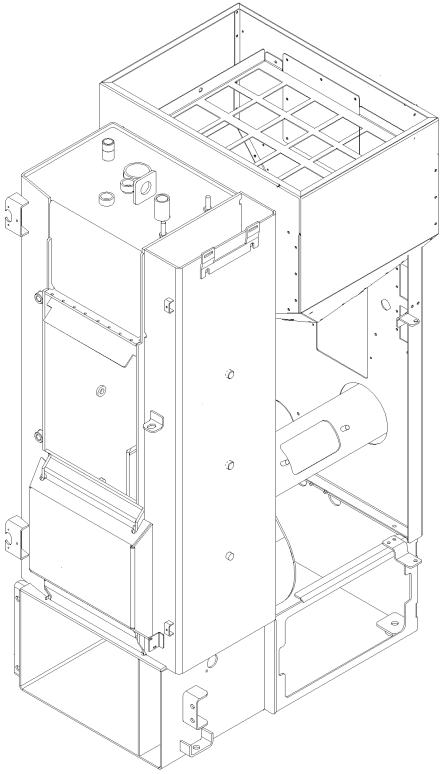

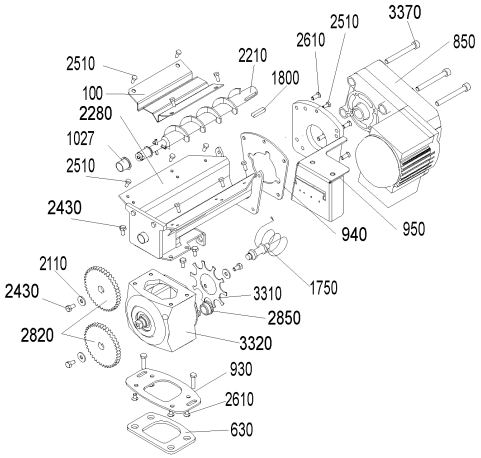
3370
2510
2610
850
2510
2210
1800
100
2280
1027
2510
2430
940
950
2110
2430
1750
3310
2850
2820
3320
930
2610
630

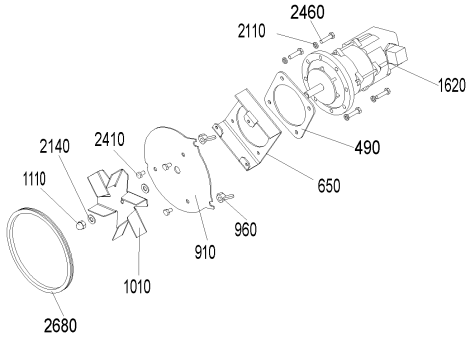
2460
2110
1620
490
2140
2410
650
1110
960
910
1010
2680

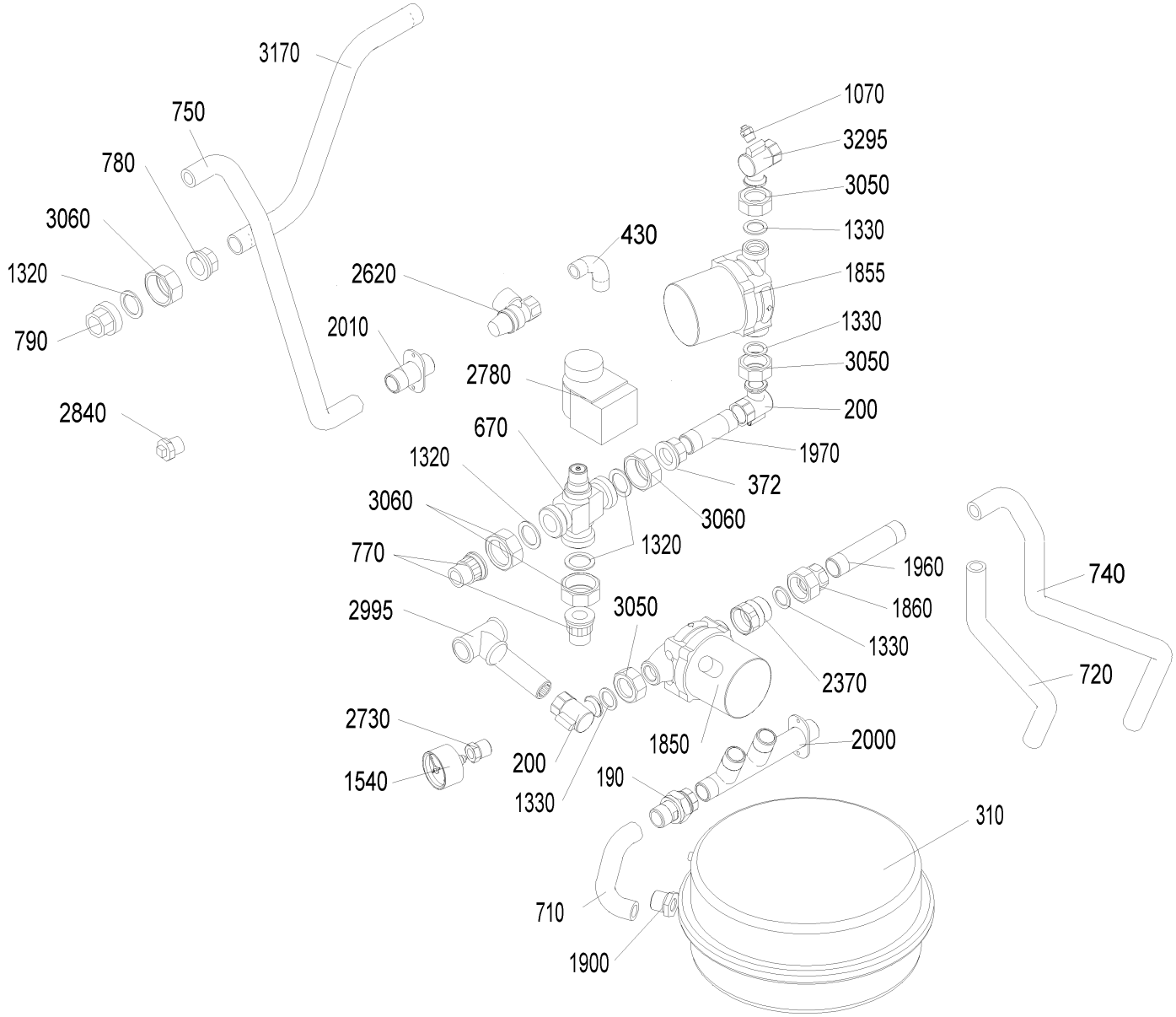
3170
750
780
3060
1320
790
2840
2620
2010
430
2780
670
1320
3060
770
2995
2730
1540
200
1330
3050
1850
190
1070
3295
3050
1330
1855
1330
3050
200
1970
372
3060
1320
1960
1860
1330
2370
2000
740
720
310
710
1900

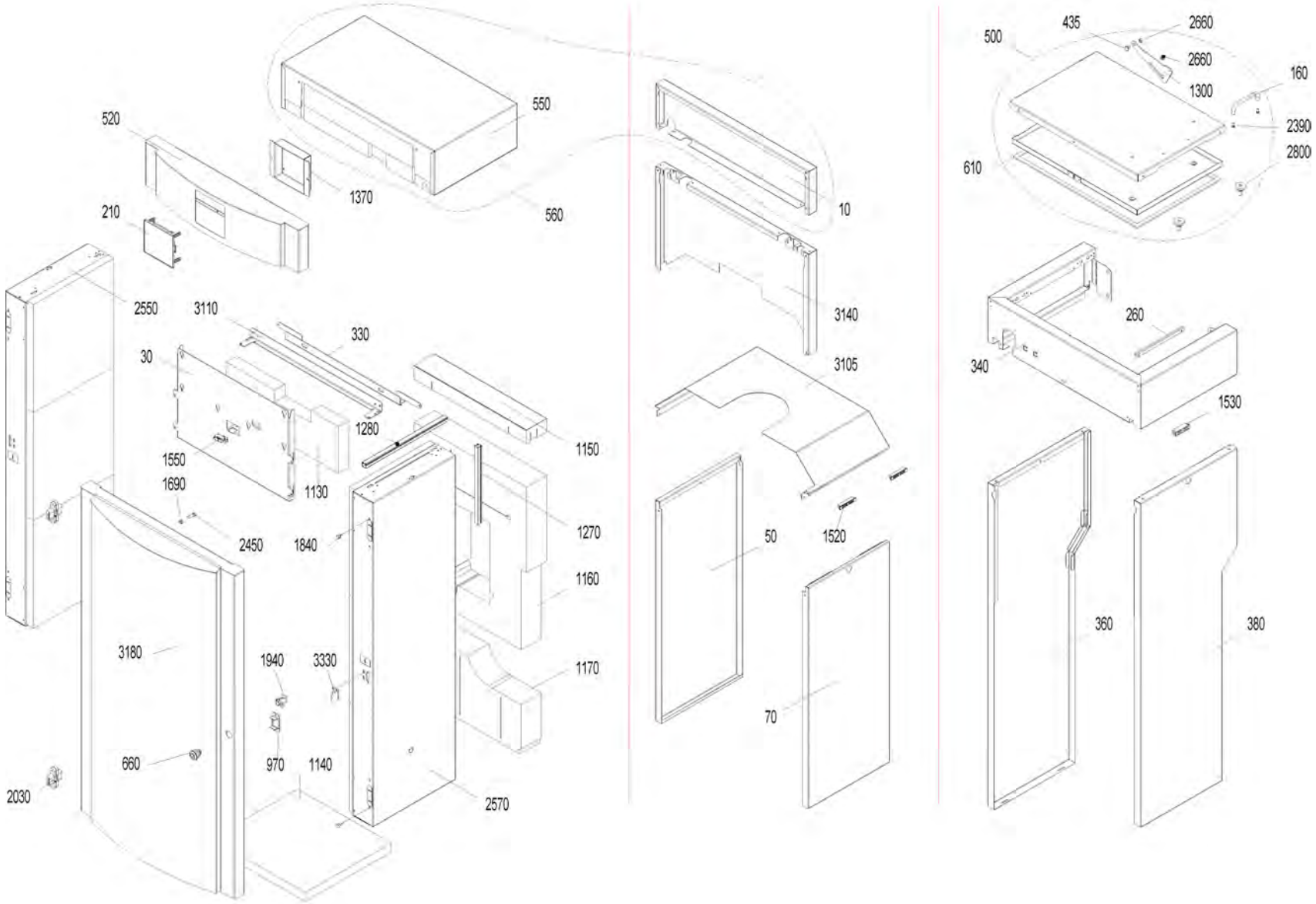
550
520
1370
560
210
2550
3110
330
30
1280
1150
1550
1690
1130
1270
2450
1840
1160
3180
1940
3330
1170
660
970
1140
2030
2570
10
3140
3105
50
1520
70
500
435
2660
2660
1300
160
2390
2800
610
260
340
1530
360
380

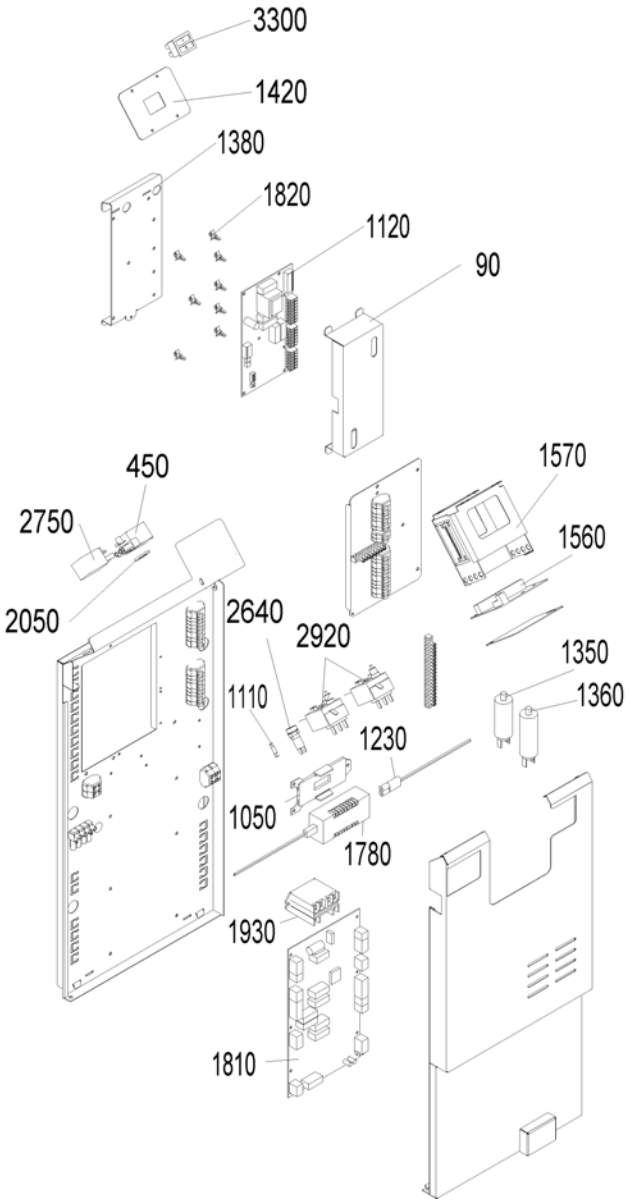
3300
1420
1380
1820
1120
90
450
2750
2050
2640
2920
1570
1560
1350
1360
1110
1230
1050
1780
1930
1810

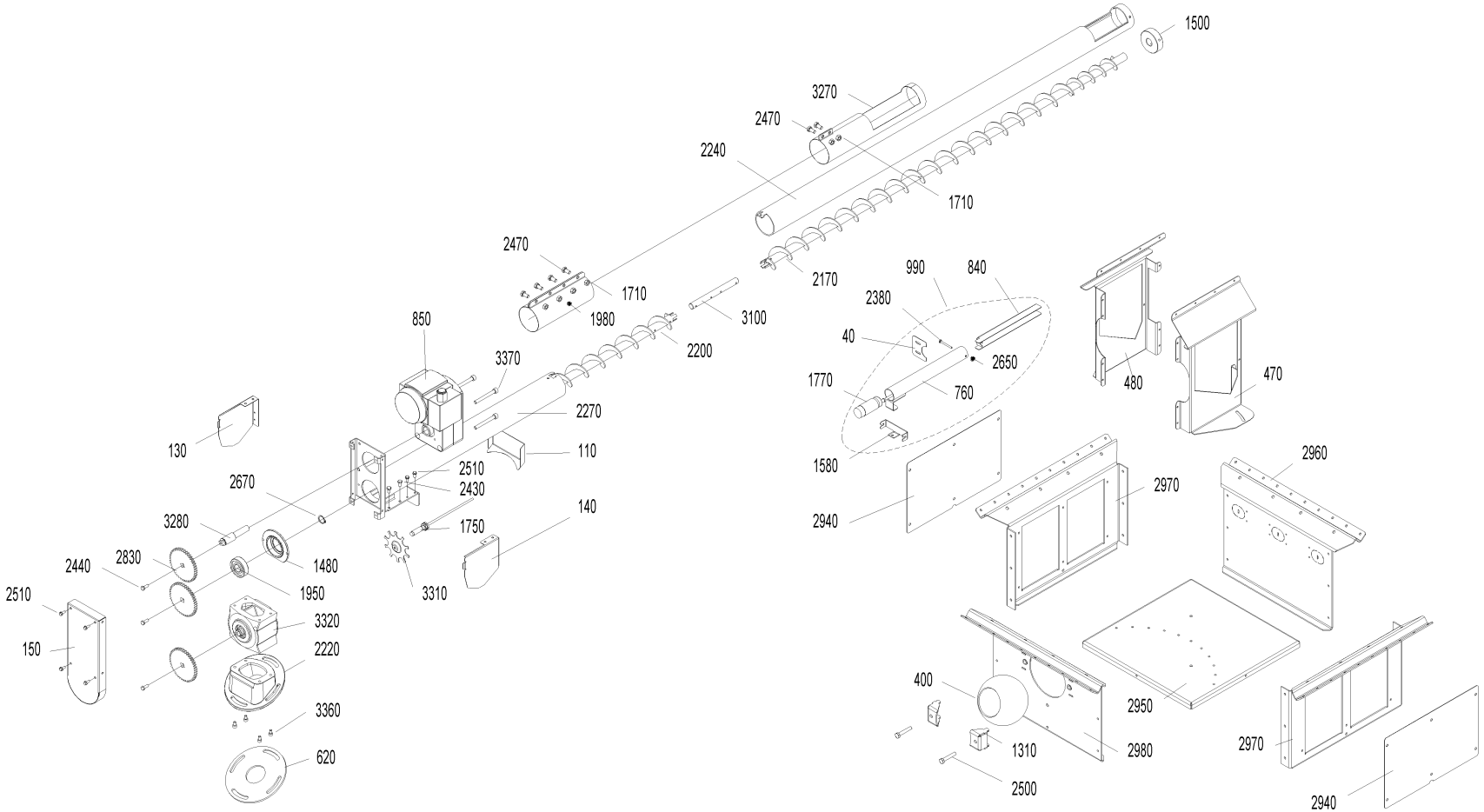
1500
3270
2470
2240
1710
2470
1710
1980
2170
3100
2200
850
3370
2270
110
130
2510
2430
2670
3280
1750
140
2440
2830
1480
1950
3310
2510
3320
150
2220
3360
620
990
840
2380
40
2650
1770
760
1580
2940
480
470
2960
2970
400
2950
1310
2980
2970
2500
2940

Item no.	Article no.	Description	Serialnumber from	Serialnumber
5	044620	Tank cover plate for FireWIN, VarioWIN	0	9999999999999
10	046287	Rear cover plate, white for VarioWIN	0	9999999999999
10	046544	Rear cover plate, grey RAL7044 for VarioWIN	0	9999999999999
30	046281	Front cover plate for VarioWIN	0	9999999999999
40	046414	Cover, level indicator, funnel for VarioWIN	0	9999999999999
45	046174	Rear cover for VarioWIN, FireWIN	0	9999999999999
48	044626	Left cover for VarioWIN, FireWIN	0	9999999999999
50	046293	Left cover, white for VarioWIN	0	9999999999999
50	046547	Left cover, red for VarioWIN	0	9999999999999
60	044368	Right cover for VarioWIN, FireWIN	0	9999999999999
70	046505	Right cover, red for VarioWIN	0	9999999999999
70	046506	Right cover, white for VarioWIN	0	9999999999999
90	051690	Cover BUML incl. Sticker	0	9999999999999
100	044376	Auger cover for VarioWIN, FireWIN	0	9999999999999
110	046419	Auger cover 30° for VarioWIN	0	9999999999999
110	046420	Auger cover 20° for VarioWIN	0	9999999999999
130	046298	Auger cover, left for VarioWIN	0	9999999999999
140	046418	Auger cover, right for VarioWIN	0	9999999999999
145	044518	Base cover for VarioWIN, FireWIN	0	9999999999999
150	046417	Gear cover for VarioWIN	0	9999999999999
160	000477	Aluminium handle for VarioWIN	0	9999999999999
170	013804	Collar screw M8x27 for VarioWIN, FireWIN	0	9999999999999
180	012502	Collar screw	0	9999999999999
190	012091	Connection coupling 3/4“ with Aqua-Stop for male thread for VarioWIN, FireWIN	0	9999999999999
195	007647	Connection piece, primary air for VarioWIN, FireWIN	0	9999999999999
200	012063	Connection bracket 1“-3/4“ for VarioWIN, FireWIN	0	9999999999999
210	011986	InfoWIN plus HW B4 SW V 4.10 VarioWIN and FireWIN from lot 0	0	9999999999999
220	044925	Combustion chamber ash pan for VarioWIN	0	9999999999999
230	045622	Coasting surface ash pan, exclusive for VarioWIN, FireWIN	0	9999999999999
240	503366	Coasting surface ash pan, Classic/ Premium for VarioWIN, FireWIN	0	9999999999999
250	044895	Ash door, complete for VarioWIN, FireWIN	0	9999999999999
255	042743	Holder for cleaning equipments for VarioWIN, LogWIN Premium 180-505,SilvaWIN,BioWIN XL35-60,EasWIN Klassik/Premium 180	0	9999999999999
260	046410	Support, white for VarioWIN	0	9999999999999
260	046495	Support, grey for VarioWIN	0	9999999999999
280	045919	Driving rod seating bracket for VarioWIN, BioWIN 10-26 from batch 30, FireWIN	0	9999999999999
290	033432	Eyebolt similar to DIN 444 - B M10x50 - 4.6 - bright for VarioWIN, FireWIN, VestoWIN Premium 200-202, VestoWIN Klassik 170-220	0	9999999999999
300	033433	Eyebolt similar to DIN 444 - B M12x50 - 4.6 - bright for VarioWIN, FireWIN,EasyWIN Klassik/Premium 180,LogWIN Premium 180-505	0	9999999999999
310	003610	Expansion tank DXM 12 G3/8“ for FireWIN, VarioWIN	0	9999999999999
330	045766	Lower retaining bracket for VarioWIN	0	9999999999999
340	046402	Top container apron, white for VarioWIN	0	9999999999999
340	046483	Top container apron, grey for VarioWIN	0	9999999999999
360	046404	Bottom left container apron, white for VarioWIN	0	9999999999999
360	046487	Bottom left container apron, red for VarioWIN	0	9999999999999
380	046663	Bottom right container apron, red for VarioWIN	0	9999999999999
380	046664	Bottom right container apron, white for VarioWIN	0	9999999999999
390	019415	Wing nut DIN 315 - M8 - brass for FAX, FireWIN, VarioWIN, BioWIN 10, EasyWIN Premium 180	0	9999999999999
400	046283	Sheet metal ball for VarioWIN	0	9999999999999
410	019836	Cylinder screw 2.9x16 (not illustrated)	0	9999999999999
420	018139	Cylinder screw 4.2x13 DIN7981SP (not illustrated)	0	9999999999999
430	002519	Long bend - 1/2“ - No. 3 - black for VarioWIN, FireWIN, GKX	0	9999999999999
435	033091	Bolt DIN 1445 - 8h11 x 4 x 10 - St - galvanised for VarioWIN, FireWIN, BioWIN 10-26, BioWIN XL 35-60	0	9999999999999

Item no.	Article no.	Description	Serialnumber from	Serialnumber
440	046574	Burner for FireWIN from batch 10, VarioWIN - For VarioWIN the cover of the secondary-air-tube has to be removed! -	0	9999999999999
450	070324	Socket, 3-pin, black	0	9999999999999
460	009792	Socket, 4-pin, black for VarioWIN	0	9999999999999
470	046440	Auger roof sheeting, left for VarioWIN	0	9999999999999
480	046445	Auger roof sheeting, right for VarioWIN	0	9999999999999
490	031244	Blower motor damping mat material: S400-003 for FireWIN, VarioWIN	0	9999999999999
500	046503	Container cover, complete, grey for VarioWIN	0	9999999999999
500	046504	Container cover, complete, white for VarioWIN	0	9999999999999
520	046446	InfoWIN cover, white for VarioWIN	0	9999999999999
520	046540	InfoWIN cover, grey for VarioWIN	0	9999999999999
540	044477	heating surface cover for FireWIN, VarioWIN	0	9999999999999
550	046514	Top cover, white for VarioWIN	0	9999999999999
550	046515	Top cover, grey for VarioWIN	0	9999999999999
560	046666	Top cover with rear cover, white for VarioWIN	0	9999999999999
560	046667	Top cover with rear cover, grey for VarioWIN	0	9999999999999
590	044516	Rear wall cover for FireWIN, VarioWIN	0	9999999999999
600	045096	Heating door rope seal (glass fibre packing 16 x 10) for VarioWIN	0	9999999999999
605	046998	Ash door rope seal (glass fibre packing 16 x 16) for VarioWIN	0	9999999999999
610	046665	Container seal	0	9999999999999
620	031269	Downpipe seal 165 X 53 X 5 mm for Vario WIN	0	9999999999999
630	031241	Downpipe seal 115.5x73.7x5 for FireWIN, VarioWIN	0	9999999999999
640	044905	Seal section 461 0069 for FireWIN, VarioWIN	0	9999999999999
650	044490	Spacer plate for FireWIN, VarioWIN	0	9999999999999
660	012256	Turning bolt	0	9999999999999
670	012092	Three-way valve VXG 48.20 3/4" for FireWIN, VarioWIN	0	9999999999999
680	002453	Compression spring 1DXDA10, 3X20X6,5 female thread IG WST.1.4310 for FireWIN, VarioWIN	0	9999999999999
690	046171	Cleaning linkage pressure piece for FireWIN from batch 10, VarioWIN	0	9999999999999
700	046160	Driving rod feed-through for FireWIN from batch 10, VarioWIN	0	9999999999999
710	000214	Stainless steel corrugated tube, DN16x145 mm, 2 union nuts 3/4“, seals for VarioWIN, FireWIN	0	9999999999999
720	000139	Stainless steel corrugated tube, DN16x400 mm, 2 union nuts 3/4“, seals for VarioWIN	0	9999999999999
740	006213	Stainless steel corrugated tube, DN16x600 mm, 2 union nuts 3/4“, seals for VarioWIN, FireWIN	0	9999999999999
750	000140	Stainless steel corrugated tube, DN16x680 mm, 2 union nuts 3/4“, seals for VarioWIN, FireWIN	0	9999999999999
760	046269	Insertion tube for VarioWIN	0	9999999999999
770	044202	Insert 3/4“ - No. 371 - flat-turned for FireWIN, VarioWIN	0	9999999999999
780	011762	Insert 3/4“ - No. 372 - black for VarioWIN, FireWIN	0	9999999999999
782	033097	Nut (low) DIN 439 - B M12 - 04 - galvanised	0	9999999999999
790	000109	Screw-in part 3/4“ - No. 370 - black for VarioWIN, FireWIN	0	9999999999999
800	012504	Ash compactor eccentric disc for FireWIN, VarioWIN	0	9999999999999
810	046463	Down chute compl. VarioWIN	0	9999999999999
815	045038	Down channel for FireWIN, VarioWIN	0	9999999999999
820	000191	KSL029 Forming screw, diameter 8x26/M5 for NBS,OEX,ASN,PMX,fittings cabinet Vesto 200, VarioWIN	0	9999999999999
830	017029	Spring shackle for VarioWIN	0	9999999999999
840	045916	Proximity switch attachment for VarioWIN	0	9999999999999
850	007106	Gearmotor with connection cable, type: FGA 53 / 4DEKG 56 # for VarioWIN, FireWIN from batch 6, BioWIN XL 35-60	0	9999999999999
860	016780	Cylinder screw M4x12 DIN 7985	0	9999999999999
870	016950	Cyl. screw M5x12, galvanised, with cross slot, ISO 7045 (DIN 7985) for VarioWIN, FireWIN	0	9999999999999
880	017094	WERL056 Flat brush 1 1/2" NO. 72753 for FireWIN, VarioWIN, BioWIN10-26, BioWIN XL 35-60	0	9999999999999
890	045615	Ash compactor flange for FireWIN, VarioWIN	0	9999999999999
900	051479	Sensor pipe flange FireWIN, VarioWIN	0	9999999999999
910	044489	Blower flange for FireWIN, VarioWIN	0	9999999999999
920	044372	Auger flange for FireWIN, VarioWIN	0	9999999999999

Item no.	Article no.	Description	Serialnumber from	Serialnumber t
930	044487	Rotary feeder flange for FireWIN, VarioWIN	0	9999999999999
940	031243	Auger motor flange seal (S400-003) for FireWIN, VarioWIN	0	9999999999999
950	045986	Auger motor flange plate for FireWIN from batch 6, VarioWIN	0	9999999999999
960	019415	Wing nut DIN 315 - M8 - brass for FAX, FireWIN, VarioWIN, BioWIN 10, EasyWIN Premium 180	0	9999999999999
970	046473	Guide plate for VarioWIN	0	9999999999999
980	045614	Ash compactor guide plate for FireWIN, VarioWIN	0	9999999999999
990	046270	Sheet steel tank fill level switch for VarioWIN	0	9999999999999
1000	012501	Fork head M8xL1 16mm / L2 32mm for FireWIN, VarioWIN	0	9999999999999
1010	046471	Blower wheel for FireWIN from batch 10, VarioWIN	0	9999999999999
1020	033112	Setscrew M8x10 DIN916	0	9999999999999
1027	012508	Friction bearing with connector	0	9999999999999
1040	001438	Semicircular ring for corrugated tube 3/4“ for FireWIN, NBE, HMX, VarioWIN	0	9999999999999
1045	046262	Left retaining plate for VarioWIN	0	9999999999999
1048	046260	Right retaining plate for VarioWIN	0	9999999999999
1050	002050	Power supply unit 002049 holding plate for VarioWIN, FireWIN, BioWIN 10-26, BioWIN XL 35-60, LogWIN Premium 180-505	0	9999999999999
1060	004870	EKX901 Manually operated bleeder 1/2" with slotted screw for AccuWIN, AccuWIN Solar, VarioWIN, FireWIN	0	9999999999999
1070	001058	ASL001 Manually operated bleeder VFR 1/4“ for OE/KN/M,GKX,ASN,ASL,OEX, MIRA, fittings cabinet Vesto 200, VarioWIN, FireWIN	0	9999999999999
1080	045613	Coasting surface lever for NHF for ash compactor for FireWIN, VestoWIN, VarioWIN	0	9999999999999
1090	046565	Heating door complete for VarioWIN	0	9999999999999
1100	044979	Heating door for VarioWIN	0	9999999999999
1110	025967	Cap nut DIN 1587 - M8 - 6 - galvanised for FAX, FireWIN, VarioWIN, BioWIN 10-26, EasyWIN Klassik/Premium 180	0	9999999999999
1120	051541	Modification set BUML TTL to BUML TTL 2Z	0	9999999999999
1130	011139	Front cover plate insulation 40x157x440 for VarioWIN	0	9999999999999
1140	011138	Floor insulation 30x337x367 for VarioWIN	0	9999999999999
1150	011137	Top rear insulation 2 80x46x440 for VarioWIN	0	9999999999999
1160	011140	Top rear insulation 1 80x440x562,5 for VarioWIN	0	9999999999999
1170	011144	Bottom rear insulation 80x232x388 for VarioWIN	0	9999999999999
1180	044994	Insulating panel for VarioWIN	0	9999999999999
1190	044722	Cable for combustion chamber door X15 for FireWIN, VarioWIN	0	9999999999999
1200	000395	Three-way valve cable for FireWIN,GMX,MIRA,GENIO/MultiWIN,VarioWIN	0	9999999999999
1210	044730	Cable for shaker motor limit X14 switch for FireWIN, VarioWIN	0	9999999999999
1220	044729	Cable for ash compactor motor X7 for FireWIN, VarioWIN	0	9999999999999
1230	002051	Power supply unit cable FRIWO (primary power line) for VarioWIN, FireWIN, BioWIN 10-26, BioWIN XL 35-60, LogWIN Premium 180-505	0	9999999999999
1240	044727	Cable for shaker motor X5 for FireWIN, VarioWIN	0	9999999999999
1250	044728	Cable for ignition element X6 for FireWIN, VarioWIN	0	9999999999999
1255	053643	Cable - ignition element for BW1, BW2, FireWIN and VarioWIN	0	9999999999999
1260	009542	Cable feed-through	0	9999999999999
1270	046508	Rear cable duct 15x15x260 mm for VarioWIN	0	9999999999999
1280	046507	Top cable duct 15x15x320 mm for VarioWIN	0	9999999999999
1290	004385	KFE cock	0	9999999999999
1300	046415	Folding support for VarioWIN	0	9999999999999
1310	046433	Clamp for VarioWIN	0	9999999999999
1320	016179	Gasket 1“ 44 x 3 x 2 mm for VarioWIN, FireWIN	0	9999999999999
1330	016152	ZH 094 Klingerit seal 1/2" (30x21x2mm) for AccuWIN, AccuWIN Solar, VarioWIN, FireWIN	0	9999999999999
1340	003019	Seal flange combustion chamber sensor VarioWIN and FireWIN	0	9999999999999
1340	016160	Klingerit seal 3/4“ (38x27x2 mm) for VarioWIN, FireWIN	0	9999999999999
1350	007330	Condenser for motor MAB 500V, 3µF for HMX,PMX,SWK,BioWIN10-26,FireWIN,VarioWIN,BioWIN XL 35-60, EasyWIN Premium 180,LogWIN Premiu	0	9999999999999
1360	007332	Condenser 4µF for auger motor for PMX150,BioWIN10/15,FireWIN,VarioWIN, BioWIN XL 35-60	0	9999999999999
1365	045035	Down channel bracket for VarioWIN	0	9999999999999
1370	046254	InfoWIN bracket for VarioWIN	0	9999999999999
1380	045761	BUML interface bracket for FireWIN, VarioWIN	0	9999999999999

Item no.	Article no.	Description	Serialnumber from	Serialnumber
1390	045215	Shake-out motor bracket for BioWIN 10-26 from batch 30, FireWIN from batch 10, VarioWIN	0	9999999999999
1400	045001	Mains power plug bracket for VarioWIN	0	9999999999999
1410	046456	Bracket, independent of room air for VarioWIN	0	9999999999999
1420	044172	Rocker switch bracket for FireWIN, VarioWIN	0	9999999999999
1430	007310	Cone, top part - split cone from batch 30 - for BioWIN10, VarioWIN	0	9999999999999
1440	007312	Cone, bottom part - cone Øi=71 - for VarioWIN	0	9999999999999
1450	044619	Heating surface cleaning crank for FireWIN, VarioWIN	0	9999999999999
1460	045619	Ash compactor bearing arm for FireWIN, VarioWIN	0	9999999999999
1470	005111	Heating surface cleaning bearing block for FireWIN, VestoWIN Klassik 170-220, VarioWIN, VestoWIN Premium 200-202	0	9999999999999
1480	007086	Bearing bush, diameter 92x17mm for VarioWIN, BioWIN XL 35-60	0	9999999999999
1490	007125	Bearing for vibrating drive	0	9999999999999
1500	007090	Auger bearing diameter 62.5x20 mm for VarioWIN	0	9999999999999
1510	002296	Long nipple 3/4“x60 mm, brass for VarioWIN, FireWIN	0	9999999999999
1520	001759	Magnetic lock No. 246.41 for GKW,NBE,GKX,GWX,GTX,PMX,HMX,FireWIN,VarioWIN, BioWIN 10-26	0	9999999999999
1530	001760	Magnetic lock, black - VW, LWP18-50, LWK	0	9999999999999
1540	001066	ASL002 Pressure gauge TYP101 Ø50 for OEX,OE/KN/M,GKW,ASN,ASL,GKX,GKA/E,MIRA,FireWIN,VarioWIN,fittings cabinet Vesto 200	0	9999999999999
1550	009277	Air control microswitch	0	9999999999999
1560	044572	Module connection PCB for FireWIN, VarioWIN	0	9999999999999
1570	041036	Module guide complete for FireWIN, VarioWIN	0	9999999999999
1580	046394	Proximity switch mounting bracket for VarioWIN	0	9999999999999
1590	046972	Ash compaction motor, coasting surface cleaning for FireWIN, VarioWIN	0	9999999999999
1610	012530	Grate shaking motor mounted replacement: 012517 for BioWIN10-26, FireWIN, VarioWIN	0	9999999999999
1620	044158	Blower motor with cable for blower for SilvaWIN, LogWIN, FireWIN, BioWIN XL 35-60, EasyWIN Premium 180, LogWIN Premium 180-505	0	9999999999999
1630	044944	Auger motor mounted replacement ET: 045907 for FireWIN, VarioWIN	0	9999999999999
1640	031156	Hexagon nut M10 DIN 439	0	9999999999999
1650	033097	Nut (low) DIN 439 - B M12 - 04 - galvanised	0	9999999999999
1660	016624	Nut DIN 934 - M12 - 8 - galvanised for VarioWIN, FireWIN, EasyWIN Klassik/Premium 180, LogWIN Premium 180-505	0	9999999999999
1670	016551	Hexagon nut M3 DIN 934	0	9999999999999
1680	016586	Hexagon nut M5 DIN 934	0	9999999999999
1690	016594	Hexagon nut M6 DIN 934	0	9999999999999
1700	016596	Nut DIN 934 - M6 - A2 for VarioWIN, FireWIN, BioWIN10-26, BioWIN XL 35-60	0	9999999999999
1710	015992	Nut M8 DIN 934 V2 - LogWIN Klassik pellet ready	0	9999999999999
1720	016565	Hexagon nut M5 with flange and gearing (not illustrated)	0	9999999999999
1730	045612	Ash compactor coasting surface plate, front for FireWIN, VarioWIN	0	9999999999999
1740	045611	Ash compactor coasting surface plate, rear for FireWIN, VarioWIN	0	9999999999999
1750	006832	Proximity switch M12, inductive	0	9999999999999
1760	009342	Proximity switch, inductive M8x1 for VarioWIN, FireWIN, BioWIN 10-26	0	9999999999999
1770	006821	Proximity switch, capacitive	0	9999999999999
1780	051645	Power supply unit 12V	0	9999999999999
1790	006849	O-ring FPM70 45 x 4	0	9999999999999
1800	006766	Feather key, without tightening DIN6885 A 6x6x28 mm for PMX, BioWIN10-26, FireWIN, VarioWIN, BioWIN XL 35-60	0	9999999999999
1810	011997	de: Platine FMP -V V6.50 VarioWIN	0	9999999999999
1820	007609	PCB holder	0	9999999999999
1830	007210	Primary air pin	0	9999999999999
1840	000299	Silicone buffer	0	9999999999999
1850	006399	HUPA pump 15-4.0 U130mm for AccuWIN, AccuWIN Solar, VarioWIN, FireWIN	0	9999999999999
1855	006419	Pump HEP 15-4.0 E 130 mm - Energy savings pump for FireWIN, VarioWIN	0	9999999999999
1860	012139	Pump screw connection DN3/4“-1“ - brass for FireWIN, VarioWIN	0	9999999999999
1870	044780	Exhaust pipe cleaning cover for FireWIN, VarioWIN	0	9999999999999
1880	044912	Clearer flat, complete for FireWIN, VarioWIN	0	9999999999999
1890	007655	Knurled nut with through-hole thread M5 SW for VarioWIN, FireWIN,BioWIN10-26	0	9999999999999

Item no.	Article no.	Description	Serialnumber from	Serialnumber t
1895	002023	Reduction nipple 1“-3/4“ for VarioWIN	0	9999999999999
1900	045025	Reduction nipple 3/8“-3/4“, turned for FireWIN, VarioWIN	0	9999999999999
1910	046158	Cleaning linkage, complete for FireWIN from batch 10, VarioWIN	0	9999999999999
1920	046570	Cleaning tool / removal device for cone for BioWIN 10 from batch30, VarioWIN	0	9999999999999
1930	005025	Power relay OMRON G7L-2A-BUB 200/240AC for PMX,BioWIN XL, BioWIN10-26,FireWIN,VarioWIN, BioWIN XL 35-60	0	9999999999999
1940	046474	Catch for panelling for VarioWIN	0	9999999999999
1950	012499	Grooved ball bearing	0	9999999999999
1960	045023	Hot water tank flow pipe 3/4“x118.5 mm - black for FireWIN, VarioWIN	0	9999999999999
1970	044198	Pipe for mixer group 3/4“x81.5 mm - black for FireWIN, VarioWIN	0	9999999999999
1980	046437	Pipe clamp,Ø 68x200 for VarioWIN	0	9999999999999
1990	045212	Grate plate, top for BioWIN 10/15 from batch 30, FireWIN from batch 10, VarioWIN	0	9999999999999
2000	044205	Return complete for FireWIN, VarioWIN	0	9999999999999
2010	044201	Return pipe for FireWIN, VarioWIN	0	9999999999999
2020	046282	Rear wall for VarioWIN	0	9999999999999
2030	007103	Cladding door hinge for LogWIN Premium 180-505, VarioWIN, BioWIN XL 35-60	0	9999999999999
2040	018058	U-washer	0	9999999999999
2050	017183	U-Washer DIN 125B - M12 - galvanised for VarioWIN, FireWIN, BioWIN XL 35-60	0	9999999999999
2060	024765	Washer DIN 125 - 5 - galvanised for VarioWIN	0	9999999999999
2070	024766	Washer DIN 125 - 6 - galvanised for VarioWIN	0	9999999999999
2080	024767	Washer DIN 125 - M8 - galvanised, ISO 7089 for VarioWIN, BioWIN 10-26, BioWIN XL 35-60, EasyWIN Premium 180	0	9999999999999
2090	021474	Disc 3 DIN134	0	9999999999999
2100	018309	Disc 5 DIN134	0	9999999999999
2110	020540	U-Washer DIN 134 - M6 - galvanised for VarioWIN, FireWIN	0	9999999999999
2120	018066	Washer DIN 134 - 8 - galvanised for VarioWIN	0	9999999999999
2130	024780	Disc 10 ISO7089	0	9999999999999
2135	031753	Disc 6 ISO 7093	0	9999999999999
2140	031755	Disc 8 ISO 7093	0	9999999999999
2150	016025	Silicone hose PU1, diameter 25x320, secondary air, independent of room air for FireWIN, VarioWIN	0	9999999999999
2160	016026	Silicone hose SG1M, diameter 32x330, primary air, independent of room air for FireWIN, VarioWIN	0	9999999999999
2170	046239	Auger 1307 mm for VarioWIN	0	9999999999999
2170	046240	Auger 761 mm for VarioWIN	0	9999999999999
2170	046241	Auger 1853 mm for VarioWIN	0	9999999999999
2200	045093	Direct auger for VarioWIN	0	9999999999999
2210	044612	Daily use container auger for FireWIN, VarioWIN	0	9999999999999
2220	012520	Auger flange 30° pour VarioWIN	0	9999999999999
2220	012529	Auger flange 20° for VarioWIN	0	9999999999999
2240	046441	Auger tube 773,5 mm for VarioWIN	0	9999999999999
2240	046465	Auger tube 1320 mm for VarioWIN	0	9999999999999
2240	046466	Auger tube 1865 mm for VarioWIN	0	9999999999999
2270	045094	Direct auger tube for VarioWIN	0	9999999999999
2280	044896	Auger tube with friction bearing for daily use container, cpl., mounted for FireWIN, VarioWIN	0	9999999999999
2290	009219	Screw door handle bearing M12 (WAF17/30) - galvanised for HMX, BioWIN10-26, FireWIN, VarioWIN, EasyWIN Klassik/Premium 180	0	9999999999999
2300	045076	Screw M6 (with U-washer and nut) for heating surface cleaning complete for PMX, BioWIN10-26, FireWIN, VarioWIN	0	9999999999999
2320	045223	Inner driving rod for BioWIN 10-26 from batch 30, VarioWIN, FireWIN	0	9999999999999
2330	045232	Driving rod, complete for BioWIN10-26 à partir de lot 30 , FireWIn à partir de lot 10, VarioWIN	0	9999999999999
2340	046090	Container protective grille for VarioWIN	0	9999999999999
2350	041498	Protective tube for exhaust gas sensor	0	9999999999999
2360	045617	Swivel shaft complete, ash compactor for FireWIN, VarioWIN	0	9999999999999
2370	012140	Gravity brake SBM 3/4“ G1 IG/AG for VarioWIN	0	9999999999999
2380	016752	Hexagon screw DIN 933 - M4x40 - 8.8 - galvanised for VarioWIN	0	9999999999999
2390	016756	Hexagon screw M5x10 DIN 933	0	9999999999999

Item no.	Article no.	Description	Serialnumber from	Serialnumber t
2400	017020	Hexagon screw Niro DIN 933 - M5x12 - A2 for HMX, FireWIN, VarioWIN	0	9999999999999
2410	015059	Hexagon screw DIN 933 - M5x35 - 8.8 - galvanised for VarioWIN, FireWIN	0	9999999999999
2420	015026	Hexagon screw DIN 933 - M6x10 - 8.8 - galvanised for VarioWIN, FireWIN	0	9999999999999
2430	017051	Hexagon screw M6x12 DIN 933 (not illustrated)	0	9999999999999
2440	024759	Hexagon screw DIN 933 - M6x16 - 8.8 - galvanised for VarioWIN	0	9999999999999
2450	015471	Hexagon screw M6x20 DIN 933	0	9999999999999
2460	015041	Hexagon screw DIN 933 - M6x25 - 8.8 - galvanised for VarioWIN, FireWIN	0	9999999999999
2470	015134	Hexagon screw M8x16 DIN 933	0	9999999999999
2480	017086	Hexagon screw M8x20 DIN 933 (not illustrated)	0	9999999999999
2490	017873	Hexagon screw DIN 933 - M8x20 - A2 for VarioWIN, FireWIN	0	9999999999999
2500	032654	Hexagon screw DIN 933 - M8x45 - 8.8 - galvanised for VarioWIN	0	9999999999999
2510	031545	Hexagon screw M5x12 DIN 7500 (not ilustrated)	0	9999999999999
2520	031549	Hexagon screw M6x12 DIN 7500	0	9999999999999
2530	017882	Thread-rolling hexagon screw DIN 7500 - M8x16 TT - galvanised for VarioWIN, EasyWIN Klassik/Premium 180	0	9999999999999
2540	027392	Hexagon pin key with T-handle 10x200 for VarioWIN, BioWIN XL 35-60	0	9999999999999
2550	046510	Left side panel, white for VarioWIN	0	9999999999999
2550	046511	Left side panel, red for VarioWIN	0	9999999999999
2570	046512	Right side panel, white for VarioWIN	0	9999999999999
2570	046513	Right side panel, red for VarioWIN	0	9999999999999
2590	017222	Countersinking screw DIN 965 - M3x12 - galvanised with cross slot for VarioWIN, FireWIN, EasyWIN Klassik/Premium 180	0	9999999999999
2600	017223	Countersinking screw DIN 965 - M4x70 - galvanised with cross slot for VarioWIN, FireWIN	0	9999999999999
2610	016863	Countersinking screw M6x16	0	9999999999999
2620	001031	ASL004 Safety valve 1/2“ 2.5 bar for GWX,OEX,OE/KN/M,ASL,GKW,GTX,ASN,GKA/E,MIRA,FireWIN,Vesto Art.Nr.:49292, VarioWIN, fittings ca	0	9999999999999
2630	003228	6.3A fuse (not illustrated)	0	9999999999999
2640	003663	Fuse holder	0	9999999999999
2650	016724	Lock nut DIN 985 - M4 - galvanised for VarioWIN	0	9999999999999
2660	016732	Lock nut DIN 985 - M6 - galvanised for VarioWIN	0	9999999999999
2670	016171	Locking ring Ø20x1.2	0	9999999999999
2680	009231	Silicone U-section, black 6x7,5 replacement:046057 (FW) or 046056 (HMX,PMX) for HMX, PMX, FireWIN, VarioWIN	0	9999999999999
2690	016073	WERV013 Silicone seal, black 310ml	0	9999999999999
2700	009540	Spatula	0	9999999999999
2710	018666	Clamping pin DIN 1481 - Ø4x20, for 3-way changeover unit for PMX, VarioWIN (* not illustrated), VestoWIN Premium 200-202, VestoWIN	0	9999999999999
2720	018184	Clamping pin DIN 1481 - Ø 5x14 for VarioWIN	0	9999999999999
2730	010286	ASL0021 Shut-off valve 1/4“ internal for pressure gauge R1/2“ for ASL/M,ÖR,SH,OEM,OEN,GTX,ASN,OEX,MIRA,FireWIN,fittings cabinet Ve	0	9999999999999
2740	005010	Steel collar 3/4“x50, black for VarioWIN, FireWIN	0	9999999999999
2750	070323	Plug, 3-pin, black	0	9999999999999
2760	070162	Plug, 4-pin, black for auger motor for VarioWIN, FireWIN	0	9999999999999
2770	070374	Plug, 7-pin (3-pin black, 4-pin brown) for blower motor for FireWIN, VarioWIN	0	9999999999999
2780	012240	Positioning drive SSY319 (230V, 50 Hz, 150s) for VarioWIN, FireWIN	0	9999999999999
2790	009992	Leg - JTB30 - M10x60 with slot for OEX, NBA, MIRA, VarioWIN, FireWIN	0	9999999999999
2800	009991	Leg - JTLO 38 - M8x16 for VarioWIN	0	9999999999999
2810	047115	Spur gear Z=28; m=1.5, for shake-out drive for FireWIN from batch 10, BioWIN 10/15 from batch 30, VarioWIN	0	9999999999999
2820	044613	Spur gear Z=32; m=2.5 for FireWIN from batch 6, VarioWIN - For units up to batch 5 009465 and 044612 must be replaced! -	0	9999999999999
2830	045771	Spur gear M2 Z45	0	9999999999999
2840	000353	KSN091 WAF Plug 1/2“ - no. 290 1- black No. 49304 for KSN, OEK, VestoWIN Klassik 170-220, FireWIN, VarioWIN	0	9999999999999
2850	012042	Plug 1/2“ MS, self-sealing, brass VER923 for VarioWIN, FireWIN	0	9999999999999
2860	044778	Jet protection plate, complete for FireWIN, VarioWIN	0	9999999999999
2870	006820	MES007 Immersion sensor (exhaust gas sensor) Pt 1000 for PMX, FireWIN, VarioWIN, BioWIN 10-26, BioWIN XL 35-60	0	9999999999999
2880	502186	MES009M Immersion sensor	0	9999999999999
2890	000027	KSL332 Immersion sleeve 130 mm long for KSL/ZHL,GKA/E,fittings cabinet Vesto200, VarioWIN	0	9999999999999
2900	012536	Disc spring DIN2093 - 16x8.2x0.6 for VarioWIN, FireWIN	0	9999999999999

Item no.	Article no.	Description	Serialnumber from	Serialnumber t
2910	007626	Thermocouple	0	9999999999999
2920	005672	Thermostat LS1+100-6U	0	9999999999999
2930	045623	Ash pan partition plate for FireWIN, VarioWIN	0	9999999999999
2940	046556	Funnel cover, left/right for VarioWIN	0	9999999999999
2950	039750	Funnel base for VarioWIN	0	9999999999999
2960	039754	Funnel side panel, rear for VarioWIN	0	9999999999999
2970	039752	Funnel side panel, right/left for VarioWIN	0	9999999999999
2980	039753	Funnel side panel, front for VarioWIN	0	9999999999999
2990	000092	T-piece 3/4“ - no. 130 - black for VarioWIN, FireWIN	0	9999999999999
2995	002024	T-piece, brass for FireWIN, VarioWINF	0	9999999999999
2997	003208	Grommet 10x17.5x1.2	0	9999999999999
3000	009553	Ash door handle rod for FireWIN, VarioWIN	0	9999999999999
3010	009549	Heating door handle rod for FireWIN, VarioWIN	0	9999999999999
3020	007083	Door stone for heating door for VarioWIN	0	9999999999999
3030	044588	Door locking bar for FireWIN, VarioWIN	0	9999999999999
3040	044591	Door locking latch for FireWIN, VarioWIN	0	9999999999999
3050	012052	Union nut 1/2“ - brass for VarioWIN, VestoWIN Klassik 170-220	0	9999999999999
3060	011770	Union nut 3/4“ - no. 374 - black WAX933 for VarioWIN, FireWIN	0	9999999999999
3070	006721	Baffle plate for FireWIN, VarioWIN	0	9999999999999
3080	006012	Silicone U-section, approx. 7x8.5 mm for VarioWIN, FireWIN, BioWIN 10-26	0	9999999999999
3090	000446	Valve insert for three-way valve 3/4“ from the VC-Serie, VCZZ6000B for VarioWIN, FireWIN	0	9999999999999
3100	012528	Auger connector, Ø15.9, h10x165 mm for VarioWIN	0	9999999999999
3105	046285	Connecting plate, coated, white for VarioWIN	0	9999999999999
3105	046546	Connecting plate, coated, red for VarioWIN	0	9999999999999
3110	046279	Connecting plate, top for VarioWIN	0	9999999999999
3120	044782	Connecting piece HFR, coasting surface cleaning for FireWIN, VarioWIN	0	9999999999999
3130	045610	Compactor plate, ash compaction for FireWIN, VarioWIN	0	9999999999999
3140	046290	Rear cladding, white for VarioWIN	0	9999999999999
3140	046545	Rear cladding, red for VarioWIN	0	9999999999999
3160	001306	Screw connection male thread D 1402, 3/4“x18 mm AG18 for FireWIN, VarioWIN	0	9999999999999
3170	007055	Flow pipe for FireWIN, VarioWIN	0	9999999999999
3180	046244	White panelling for VarioWIN	0	9999999999999
3180	046553	Red/grey panelling for VarioWIN	0	9999999999999
3200	009948	Wago terminal block 261; 2-pin WMS 1-2, 3-piece for VarioWIN, FireWIN	0	9999999999999
3210	006833	Wago terminal block 261; 4-pin "12V GND"	0	9999999999999
3220	006834	Wago terminal block 261; 4-pin "safety 1-4"	0	9999999999999
3230	009960	Wago terminal block 261; 8-pin 230V extnd. for VarioWIN, FireWIN, BioWIN10-26, BioWIN XL 35-60 (*not illustrated)	0	9999999999999
3240	009891	Wago terminal block 261; 11-pin safety 1-11 for FireWIN, VarioWIN	0	9999999999999
3250	009966	Wago terminal block 261; 11-pin orange extra-low voltage Extnd. for VarioWIN, FireWIN, BioWIN XL 35-60	0	9999999999999
3260	009968	Wago terminal block 261; 13-pin orange extra-low voltage (no. 1-13), for VarioWIN, FireWIN, BioWIN 10-26, BioWIN XL 35-60 (*not il	0	9999999999999
3270	046439	Maintenance pipe for VarioWIN	0	9999999999999
3280	012516	Shaft for motor, Ø = 20 h7x96.3mm for VarioWIN	0	9999999999999
3290	045216	Limit switch bracket for BioWIN 10-26 from batch 30, VarioWIN, FireWIN	0	9999999999999
3295	045024	Elbow adapter with G 14“ for VarioWIN	0	9999999999999
3300	005563	Rocker switch SW/GR 0-1	0	9999999999999
3310	044614	Toothed washer for FireWIN, BioWIN XL 35-60, VarioWIN	0	9999999999999
3320	009465	Rotary feeder for FireWIN from batch 6, VarioWIN	0	9999999999999
3330	046435	Centring plate for VarioWIN	0	9999999999999
3335	046274	Auxiliary sheet metal - direct auger for VarioWIN	0	9999999999999
3337	053851	de: Zündelement inkl. Kabel beigelegt.	0	9999999999999
3337	055201	Ignition element BioWIN10-26, FireWIN from lot 15, VarioWIN from lot 15 BioWIN XL, LWK	0	9999999999999

Item no.	Article no.	Description	Serialnumber from	Serialnumber t
3337	055202	Modifications set ignition	0	9999999999999
3340	009567	Cylindrical button 519-28-M10 for FireWIN, VarioWIN	0	9999999999999
3350	017048	Shoulder screw M8 10x25 ISO 7379	0	9999999999999
3360	033531	Cylinder-head screw, hexagon socket ISO 4762 - M6x10 - 8.8 - (DIN 912) for VarioWIN, BioWIN 10-26	0	9999999999999
3370	017049	Cylinder-head screw, hexagon socket ISO 4762 - M8x70 - 8.8 - galva. (DIN 912) for VarioWIN, FireWIN, BioWIN XL 35-60	0	9999999999999
3380	020117	Cylinder-head screw, hexagon socket ISO 4762 - M12x25 - 8.8 - galva. (DIN 912) for VarioWIN, FireWIN, BioWIN10-26, LogWIN Premium	0	9999999999999
3390	012537	Cylinder-head screw, hexagon socket M6x10, special version with tall head for VarioWIN, FireWIN	0	9999999999999

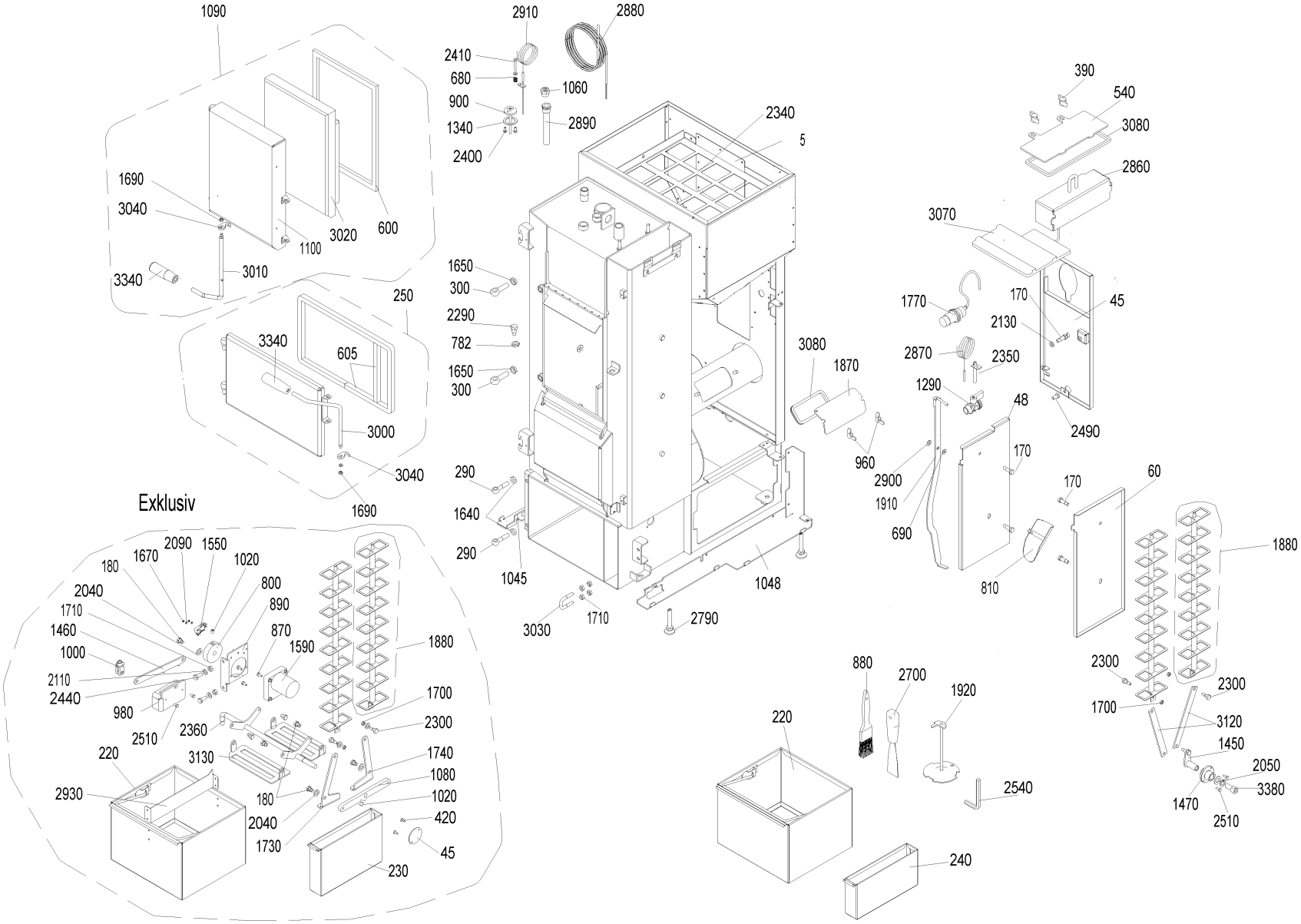
1090
1690
3040
3020
600
1100
3340
3010
250
3340
605
3000
3040
1690
Exklusiv
2090
1550
1670
1020
180
800
2040
890
1710
870
1460
1590
1000
1880
2110
1700
2440
2300
980
2510
2360
1740
220
3130
1080
2930
1020
180
420
2040
45
1730
230
2910
2880
2410
680
1060
900
2890
1340
2400
2340
5
1650
300
2290
782
1650
300
290
1640
290
1045
3030
1710
2790
1048
3080
1870
960
390
540
3080
2860
3070
1770
170
45
2130
2870
2350
1290
48
2490
2900
170
1910
690
810
170
60
1880
2300
2300
1700
3120
1450
2050
3380
1470
2510
880
2700
1920
220
2540
240

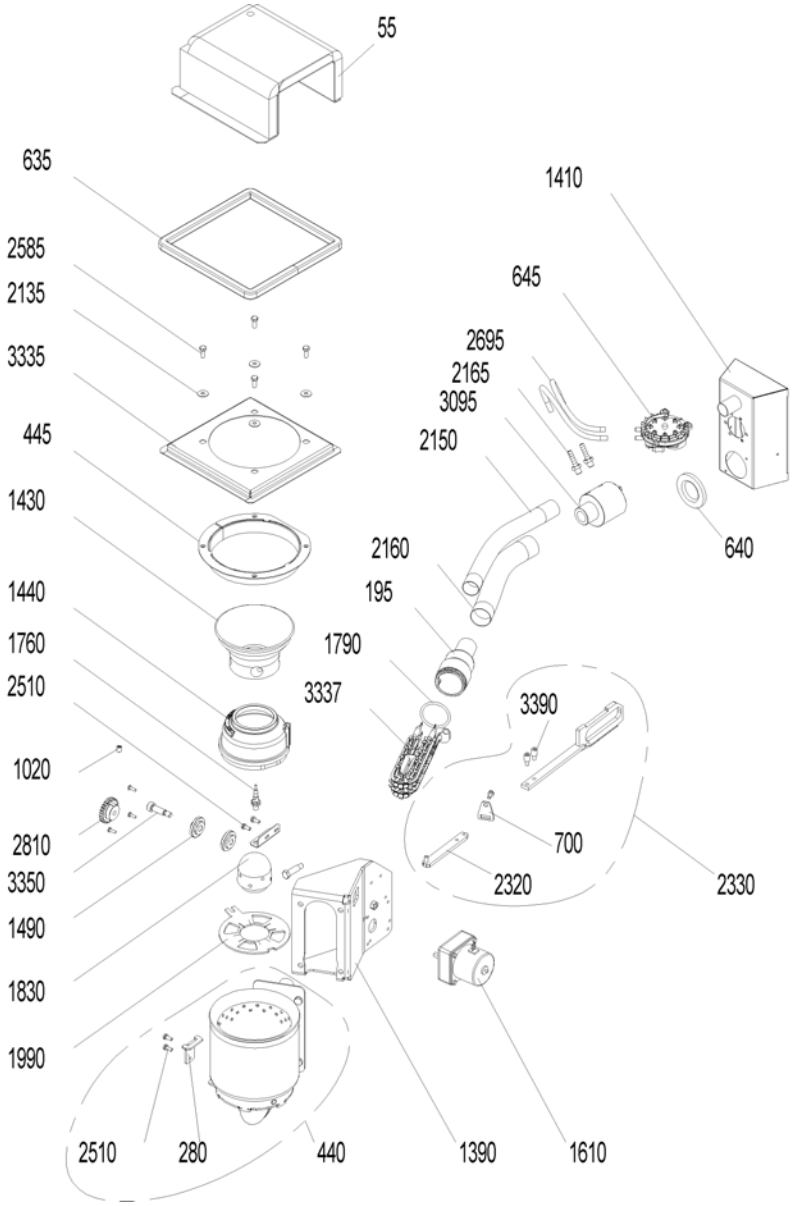
55
635
2585
2135
3335
445
1430
1440
1760
2510
1020
2810
3350
1490
1830
1990
2510
280
440
1390
1610
1410
645
2695
2165
3095
2150
2160
195
1790
3337
3390
700
2320
2330
640

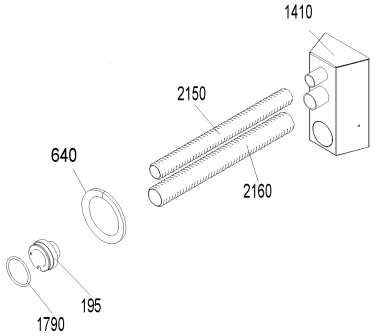
1410
2150
640
2160
195
1790

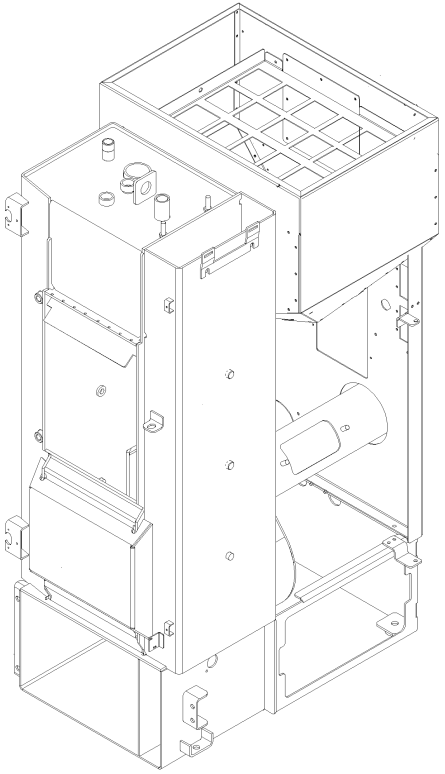

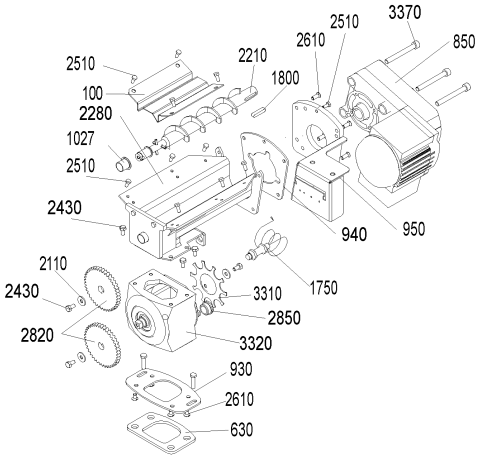
3370
2510
2610
850
2510
2210
1800
100
2280
1027
2510
2430
940
950
2110
2430
1750
3310
2850
2820
3320
930
2610
630

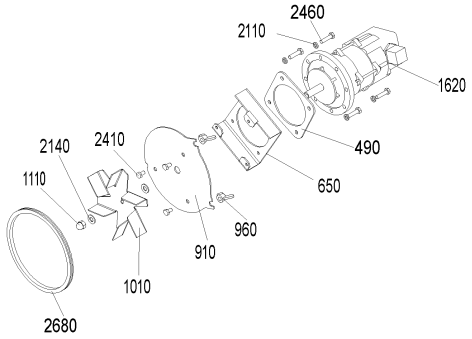
2460
2110
1620
490
2140
2410
650
1110
960
910
1010
2680

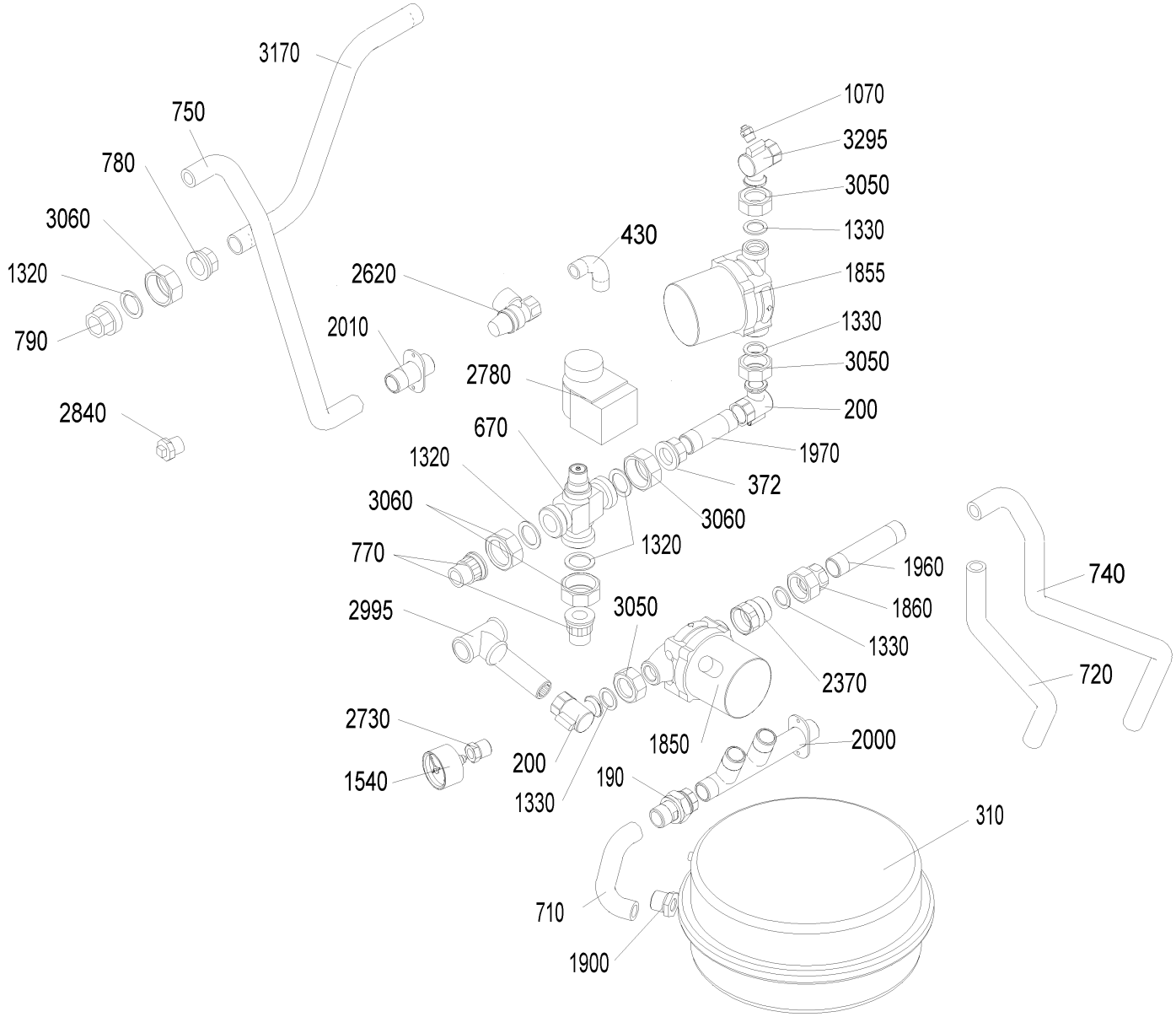
3170
750
780
3060
1320
790
2840
2620
2010
430
2780
670
1320
3060
770
2995
2730
1540
1070
3295
3050
1330
1855
1330
3050
200
1970
372
3060
1320
3050
200
1330
1850
190
2370
1960
1860
1330
740
720
2000
310
710
1900

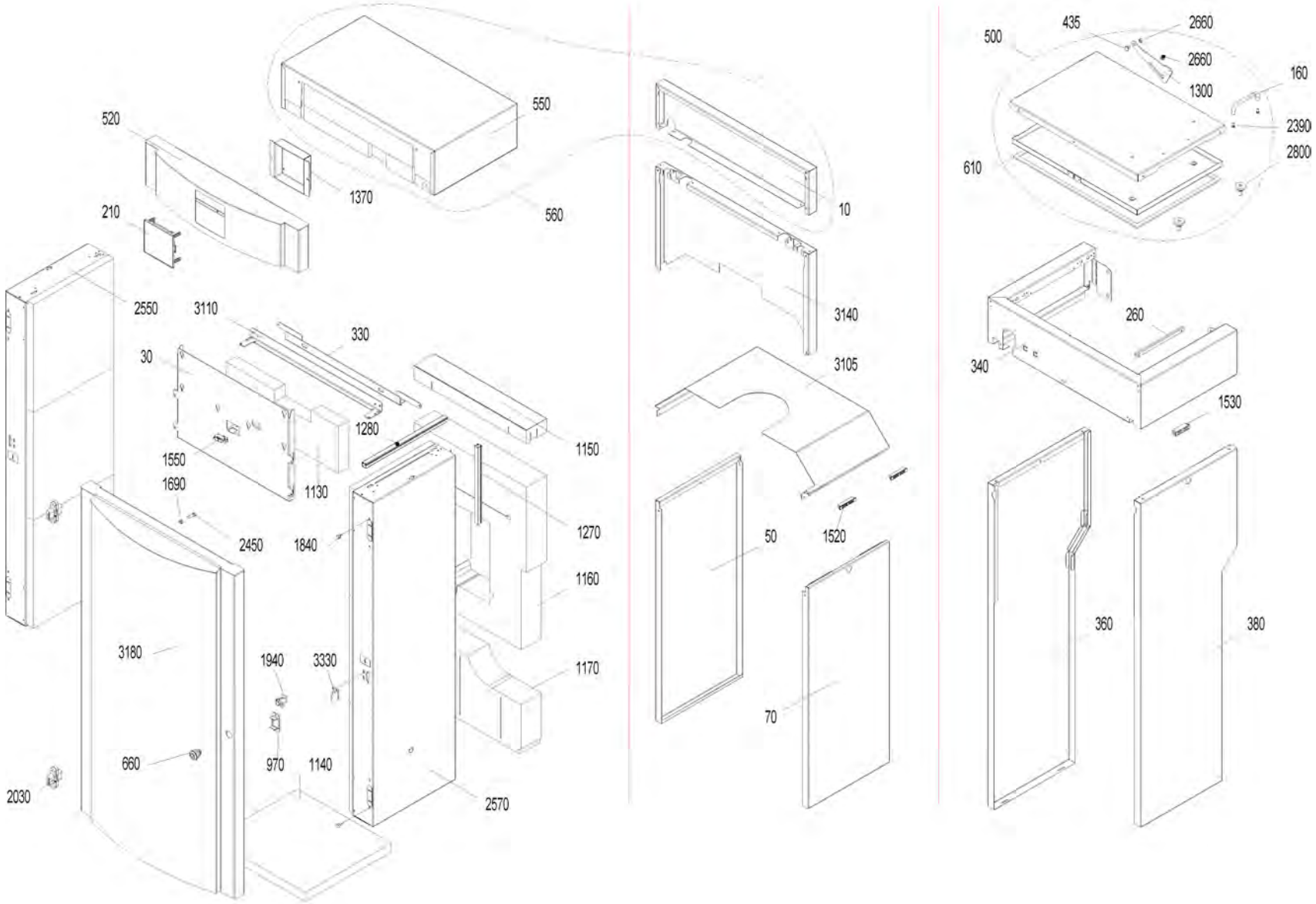
550
520
1370
560
210
2550
3110
330
30
1280
1150
1550
1690
1130
1270
2450
1840
1160
3180
1940
3330
1170
660
970
1140
2030
2570
10
3140
3105
50
1520
70
500
435
2660
2660
1300
160
2390
2800
610
260
340
1530
360
380

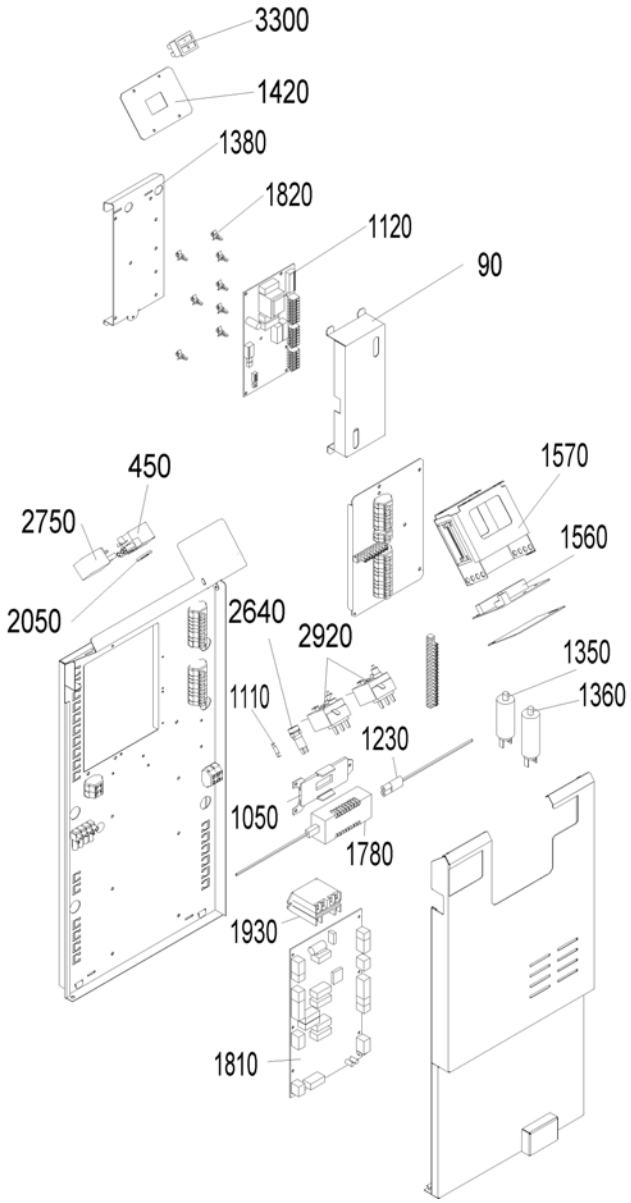
3300
1420
1380
1820
1120
90
450
2750
2050
2640
2920
1570
1560
1350
1360
1110
1230
1050
1780
1930
1810

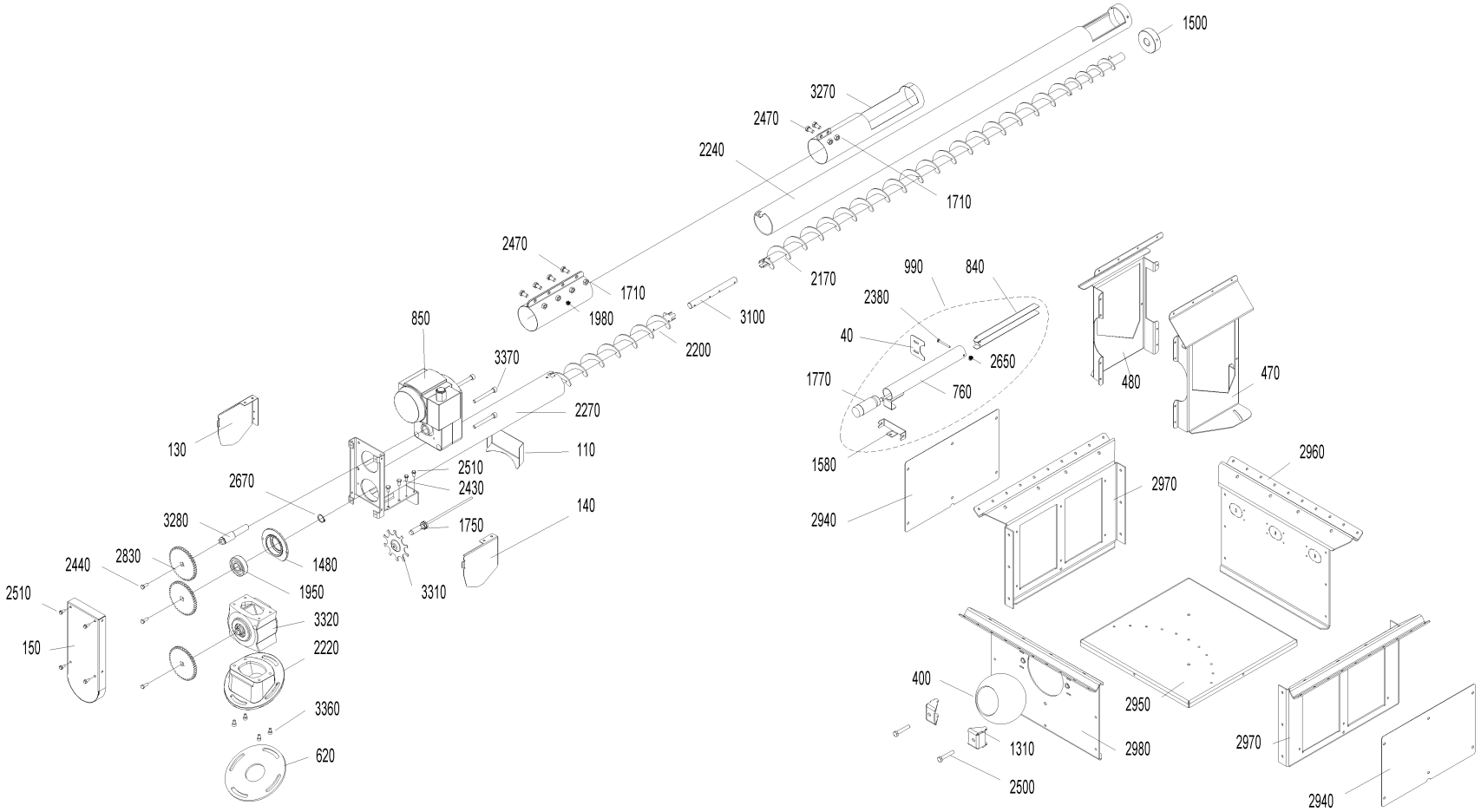
1500
3270
2470
2240
1710
2170
2470
1710
1980
2200
3100
850
3370
2270
130
110
2510
2430
2670
1750
140
3280
2830
2440
1480
1950
2510
3320
150
2220
3360
620
3310
990
840
2380
40
2650
1770
760
1580
2940
480
470
2960
2970
2950
2980
400
1310
2500
2970
2940

Item no.	Article no.	Description	Serialnumber from	Serialnumber t
5	044620	Tank cover plate for FireWIN, VarioWIN	0	9999999999999
10	046287	Rear cover plate, white for VarioWIN	0	9999999999999
10	046544	Rear cover plate, grey RAL7044 for VarioWIN	0	9999999999999
30	046281	Front cover plate for VarioWIN	0	9999999999999
40	046414	Cover, level indicator, funnel for VarioWIN	0	9999999999999
45	046174	Rear cover for VarioWIN, FireWIN	0	9999999999999
48	044626	Left cover for VarioWIN, FireWIN	0	9999999999999
50	046293	Left cover, white for VarioWIN	0	9999999999999
50	046547	Left cover, red for VarioWIN	0	9999999999999
60	044368	Right cover for VarioWIN, FireWIN	0	9999999999999
70	046505	Right cover, red for VarioWIN	0	9999999999999
70	046506	Right cover, white for VarioWIN	0	9999999999999
90	051690	Cover BUML incl. Sticker	0	9999999999999
100	044376	Auger cover for VarioWIN, FireWIN	0	9999999999999
110	046419	Auger cover 30° for VarioWIN	0	9999999999999
110	046420	Auger cover 20° for VarioWIN	0	9999999999999
130	046298	Auger cover, left for VarioWIN	0	9999999999999
140	046418	Auger cover, right for VarioWIN	0	9999999999999
145	044518	Base cover for VarioWIN, FireWIN	0	9999999999999
150	046417	Gear cover for VarioWIN	0	9999999999999
160	000477	Aluminium handle for VarioWIN	0	9999999999999
170	013804	Collar screw M8x27 for VarioWIN, FireWIN	0	9999999999999
180	012502	Collar screw	0	9999999999999
190	012091	Connection coupling 3/4“ with Aqua-Stop for male thread for VarioWIN, FireWIN	0	9999999999999
195	007647	Connection piece, primary air for VarioWIN, FireWIN	0	9999999999999
200	012063	Connection bracket 1“-3/4“ for VarioWIN, FireWIN	0	9999999999999
210	011986	InfoWIN plus HW B4 SW V 4.10 VarioWIN and FireWIN from lot 0	0	9999999999999
220	044925	Combustion chamber ash pan for VarioWIN	0	9999999999999
230	045622	Coasting surface ash pan, exclusive for VarioWIN, FireWIN	0	9999999999999
240	503366	Coasting surface ash pan, Classic/ Premium for VarioWIN, FireWIN	0	9999999999999
250	044895	Ash door, complete for VarioWIN, FireWIN	0	9999999999999
255	042743	Holder for cleaning equipments for VarioWIN, LogWIN Premium 180-505,SilvaWIN,BioWIN XL35-60,EasWIN Klassik/Premium 180	0	9999999999999
260	046410	Support, white for VarioWIN	0	9999999999999
260	046495	Support, grey for VarioWIN	0	9999999999999
280	045919	Driving rod seating bracket for VarioWIN, BioWIN 10-26 from batch 30, FireWIN	0	9999999999999
290	033432	Eyebolt similar to DIN 444 - B M10x50 - 4.6 - bright for VarioWIN, FireWIN, VestoWIN Premium 200-202, VestoWIN Klassik 170-220	0	9999999999999
300	033433	Eyebolt similar to DIN 444 - B M12x50 - 4.6 - bright for VarioWIN, FireWIN,EasyWIN Klassik/Premium 180,LogWIN Premium 180-505	0	9999999999999
310	003610	Expansion tank DXM 12 G3/8“ for FireWIN, VarioWIN	0	9999999999999
330	045766	Lower retaining bracket for VarioWIN	0	9999999999999
340	046402	Top container apron, white for VarioWIN	0	9999999999999
340	046483	Top container apron, grey for VarioWIN	0	9999999999999
360	046404	Bottom left container apron, white for VarioWIN	0	9999999999999
360	046487	Bottom left container apron, red for VarioWIN	0	9999999999999
380	046663	Bottom right container apron, red for VarioWIN	0	9999999999999
380	046664	Bottom right container apron, white for VarioWIN	0	9999999999999
390	019415	Wing nut DIN 315 - M8 - brass for FAX, FireWIN, VarioWIN, BioWIN 10, EasyWIN Premium 180	0	9999999999999
400	046283	Sheet metal ball for VarioWIN	0	9999999999999
410	019836	Cylinder screw 2.9x16 (not illustrated)	0	9999999999999
420	018139	Cylinder screw 4.2x13 DIN7981SP (not illustrated)	0	9999999999999
430	002519	Long bend - 1/2“ - No. 3 - black for VarioWIN, FireWIN, GKX	0	9999999999999
435	033091	Bolt DIN 1445 - 8h11 x 4 x 10 - St - galvanised for VarioWIN, FireWIN, BioWIN 10-26, BioWIN XL 35-60	0	9999999999999

Item no.	Article no.	Description	Serialnumber from	Serialnumber
440	046574	Burner for FireWIN from batch 10, VarioWIN - For VarioWIN the cover of the secondary-air-tube has to be removed! -	0	9999999999999
450	070324	Socket, 3-pin, black	0	9999999999999
460	009792	Socket, 4-pin, black for VarioWIN	0	9999999999999
470	046440	Auger roof sheeting, left for VarioWIN	0	9999999999999
480	046445	Auger roof sheeting, right for VarioWIN	0	9999999999999
490	031244	Blower motor damping mat material: S400-003 for FireWIN, VarioWIN	0	9999999999999
500	046503	Container cover, complete, grey for VarioWIN	0	9999999999999
500	046504	Container cover, complete, white for VarioWIN	0	9999999999999
520	046446	InfoWIN cover, white for VarioWIN	0	9999999999999
520	046540	InfoWIN cover, grey for VarioWIN	0	9999999999999
540	044477	heating surface cover for FireWIN, VarioWIN	0	9999999999999
550	046514	Top cover, white for VarioWIN	0	9999999999999
550	046515	Top cover, grey for VarioWIN	0	9999999999999
560	046666	Top cover with rear cover, white for VarioWIN	0	9999999999999
560	046667	Top cover with rear cover, grey for VarioWIN	0	9999999999999
590	044516	Rear wall cover for FireWIN, VarioWIN	0	9999999999999
600	045096	Heating door rope seal (glass fibre packing 16 x 10) for VarioWIN	0	9999999999999
605	046998	Ash door rope seal (glass fibre packing 16 x 16) for VarioWIN	0	9999999999999
610	046665	Container seal	0	9999999999999
620	031269	Downpipe seal 165 X 53 X 5 mm for Vario WIN	0	9999999999999
630	031241	Downpipe seal 115.5x73.7x5 for FireWIN, VarioWIN	0	9999999999999
640	044905	Seal section 461 0069 for FireWIN, VarioWIN	0	9999999999999
650	044490	Spacer plate for FireWIN, VarioWIN	0	9999999999999
660	012256	Turning bolt	0	9999999999999
670	012092	Three-way valve VXG 48.20 3/4" for FireWIN, VarioWIN	0	9999999999999
680	002453	Compression spring 1DXDA10, 3X20X6,5 female thread IG WST.1.4310 for FireWIN, VarioWIN	0	9999999999999
690	046171	Cleaning linkage pressure piece for FireWIN from batch 10, VarioWIN	0	9999999999999
700	046160	Driving rod feed-through for FireWIN from batch 10, VarioWIN	0	9999999999999
710	000214	Stainless steel corrugated tube, DN16x145 mm, 2 union nuts 3/4“, seals for VarioWIN, FireWIN	0	9999999999999
720	000139	Stainless steel corrugated tube, DN16x400 mm, 2 union nuts 3/4“, seals for VarioWIN	0	9999999999999
740	006213	Stainless steel corrugated tube, DN16x600 mm, 2 union nuts 3/4“, seals for VarioWIN, FireWIN	0	9999999999999
750	000140	Stainless steel corrugated tube, DN16x680 mm, 2 union nuts 3/4“, seals for VarioWIN, FireWIN	0	9999999999999
760	046269	Insertion tube for VarioWIN	0	9999999999999
770	044202	Insert 3/4“ - No. 371 - flat-turned for FireWIN, VarioWIN	0	9999999999999
780	011762	Insert 3/4“ - No. 372 - black for VarioWIN, FireWIN	0	9999999999999
782	033097	Nut (low) DIN 439 - B M12 - 04 - galvanised	0	9999999999999
790	000109	Screw-in part 3/4“ - No. 370 - black for VarioWIN, FireWIN	0	9999999999999
800	012504	Ash compactor eccentric disc for FireWIN, VarioWIN	0	9999999999999
810	046463	Down chute compl. VarioWIN	0	9999999999999
815	045038	Down channel for FireWIN, VarioWIN	0	9999999999999
820	000191	KSL029 Forming screw, diameter 8x26/M5 for NBS,OEX,ASN,PMX,fittings cabinet Vesto 200, VarioWIN	0	9999999999999
830	017029	Spring shackle for VarioWIN	0	9999999999999
840	045916	Proximity switch attachment for VarioWIN	0	9999999999999
850	007106	Gearmotor with connection cable, type: FGA 53 / 4DEKG 56 # for VarioWIN, FireWIN from batch 6, BioWIN XL 35-60	0	9999999999999
860	016780	Cylinder screw M4x12 DIN 7985	0	9999999999999
870	016950	Cyl. screw M5x12, galvanised, with cross slot, ISO 7045 (DIN 7985) for VarioWIN, FireWIN	0	9999999999999
880	017094	WERL056 Flat brush 1 1/2" NO. 72753 for FireWIN, VarioWIN, BioWIN10-26, BioWIN XL 35-60	0	9999999999999
890	045615	Ash compactor flange for FireWIN, VarioWIN	0	9999999999999
900	051479	Sensor pipe flange FireWIN, VarioWIN	0	9999999999999
910	044489	Blower flange for FireWIN, VarioWIN	0	9999999999999
920	044372	Auger flange for FireWIN, VarioWIN	0	9999999999999

Item no.	Article no.	Description	Serialnumber from	Serialnumber
930	044487	Rotary feeder flange for FireWIN, VarioWIN	0	9999999999999
940	031243	Auger motor flange seal (S400-003) for FireWIN, VarioWIN	0	9999999999999
950	045986	Auger motor flange plate for FireWIN from batch 6, VarioWIN	0	9999999999999
960	019415	Wing nut DIN 315 - M8 - brass for FAX, FireWIN, VarioWIN, BioWIN 10, EasyWIN Premium 180	0	9999999999999
970	046473	Guide plate for VarioWIN	0	9999999999999
980	045614	Ash compactor guide plate for FireWIN, VarioWIN	0	9999999999999
990	046270	Sheet steel tank fill level switch for VarioWIN	0	9999999999999
1000	012501	Fork head M8xL1 16mm / L2 32mm for FireWIN, VarioWIN	0	9999999999999
1010	046471	Blower wheel for FireWIN from batch 10, VarioWIN	0	9999999999999
1020	033112	Setscrew M8x10 DIN916	0	9999999999999
1027	012508	Friction bearing with connector	0	9999999999999
1040	001438	Semicircular ring for corrugated tube 3/4“ for FireWIN, NBE, HMX, VarioWIN	0	9999999999999
1045	046262	Left retaining plate for VarioWIN	0	9999999999999
1048	046260	Right retaining plate for VarioWIN	0	9999999999999
1050	002050	Power supply unit 002049 holding plate for VarioWIN, FireWIN, BioWIN 10-26, BioWIN XL 35-60, LogWIN Premium 180-505	0	9999999999999
1060	004870	EKX901 Manually operated bleeder 1/2" with slotted screw for AccuWIN, AccuWIN Solar, VarioWIN, FireWIN	0	9999999999999
1070	001058	ASL001 Manually operated bleeder VFR 1/4“ for OE/KN/M,GKX,ASN,ASL,OEX, MIRA, fittings cabinet Vesto 200, VarioWIN, FireWIN	0	9999999999999
1080	045613	Coasting surface lever for NHF for ash compactor for FireWIN, VestoWIN, VarioWIN	0	9999999999999
1090	046565	Heating door complete for VarioWIN	0	9999999999999
1100	044979	Heating door for VarioWIN	0	9999999999999
1110	025967	Cap nut DIN 1587 - M8 - 6 - galvanised for FAX, FireWIN, VarioWIN, BioWIN 10-26, EasyWIN Klassik/Premium 180	0	9999999999999
1120	051541	Modification set BUML TTL to BUML TTL 2Z	0	9999999999999
1130	011139	Front cover plate insulation 40x157x440 for VarioWIN	0	9999999999999
1140	011138	Floor insulation 30x337x367 for VarioWIN	0	9999999999999
1150	011137	Top rear insulation 2 80x46x440 for VarioWIN	0	9999999999999
1160	011140	Top rear insulation 1 80x440x562,5 for VarioWIN	0	9999999999999
1170	011144	Bottom rear insulation 80x232x388 for VarioWIN	0	9999999999999
1180	044994	Insulating panel for VarioWIN	0	9999999999999
1190	044722	Cable for combustion chamber door X15 for FireWIN, VarioWIN	0	9999999999999
1200	000395	Three-way valve cable for FireWIN,GMX,MIRA,GENIO/MultiWIN,VarioWIN	0	9999999999999
1210	044730	Cable for shaker motor limit X14 switch for FireWIN, VarioWIN	0	9999999999999
1220	044729	Cable for ash compactor motor X7 for FireWIN, VarioWIN	0	9999999999999
1230	002051	Power supply unit cable FRIWO (primary power line) for VarioWIN, FireWIN, BioWIN 10-26, BioWIN XL 35-60, LogWIN Premium 180-505	0	9999999999999
1240	044727	Cable for shaker motor X5 for FireWIN, VarioWIN	0	9999999999999
1250	044728	Cable for ignition element X6 for FireWIN, VarioWIN	0	9999999999999
1255	053643	Cable - ignition element for BW1, BW2, FireWIN and VarioWIN	0	9999999999999
1260	009542	Cable feed-through	0	9999999999999
1270	046508	Rear cable duct 15x15x260 mm for VarioWIN	0	9999999999999
1280	046507	Top cable duct 15x15x320 mm for VarioWIN	0	9999999999999
1290	004385	KFE cock	0	9999999999999
1300	046415	Folding support for VarioWIN	0	9999999999999
1310	046433	Clamp for VarioWIN	0	9999999999999
1320	016179	Gasket 1“ 44 x 3 x 2 mm for VarioWIN, FireWIN	0	9999999999999
1330	016152	ZH 094 Klingerit seal 1/2" (30x21x2mm) for AccuWIN, AccuWIN Solar, VarioWIN, FireWIN	0	9999999999999
1340	003019	Seal flange combustion chamber sensor VarioWIN and FireWIN	0	9999999999999
1340	016160	Klingerit seal 3/4“ (38x27x2 mm) for VarioWIN, FireWIN	0	9999999999999
1350	007330	Condenser for motor MAB 500V, 3µF for HMX,PMX,SWK,BioWIN10-26,FireWIN,VarioWIN,BioWIN XL 35-60, EasyWIN Premium 180,LogWIN Premiu	0	9999999999999
1360	007332	Condenser 4µF for auger motor for PMX150,BioWIN10/15,FireWIN,VarioWIN, BioWIN XL 35-60	0	9999999999999
1365	045035	Down channel bracket for VarioWIN	0	9999999999999
1370	046254	InfoWIN bracket for VarioWIN	0	9999999999999
1380	045761	BUML interface bracket for FireWIN, VarioWIN	0	9999999999999

Item no.	Article no.	Description	Serialnumber from	Serialnumber
1390	045215	Shake-out motor bracket for BioWIN 10-26 from batch 30, FireWIN from batch 10, VarioWIN	0	9999999999999
1400	045001	Mains power plug bracket for VarioWIN	0	9999999999999
1410	046456	Bracket, independent of room air for VarioWIN	0	9999999999999
1420	044172	Rocker switch bracket for FireWIN, VarioWIN	0	9999999999999
1430	007310	Cone, top part - split cone from batch 30 - for BioWIN10, VarioWIN	0	9999999999999
1440	007312	Cone, bottom part - cone Øi=71 - for VarioWIN	0	9999999999999
1450	044619	Heating surface cleaning crank for FireWIN, VarioWIN	0	9999999999999
1460	045619	Ash compactor bearing arm for FireWIN, VarioWIN	0	9999999999999
1470	005111	Heating surface cleaning bearing block for FireWIN, VestoWIN Klassik 170-220, VarioWIN, VestoWIN Premium 200-202	0	9999999999999
1480	007086	Bearing bush, diameter 92x17mm for VarioWIN, BioWIN XL 35-60	0	9999999999999
1490	007125	Bearing for vibrating drive	0	9999999999999
1500	007090	Auger bearing diameter 62.5x20 mm for VarioWIN	0	9999999999999
1510	002296	Long nipple 3/4“x60 mm, brass for VarioWIN, FireWIN	0	9999999999999
1520	001759	Magnetic lock No. 246.41 for GKW,NBE,GKX,GWX,GTX,PMX,HMX,FireWIN,VarioWIN, BioWIN 10-26	0	9999999999999
1530	001760	Magnetic lock, black - VW, LWP18-50, LWK	0	9999999999999
1540	001066	ASL002 Pressure gauge TYP101 Ø50 for OEX,OE/KN/M,GKW,ASN,ASL,GKX,GKA/E,MIRA,FireWIN,VarioWIN,fittings cabinet Vesto 200	0	9999999999999
1550	009277	Air control microswitch	0	9999999999999
1560	044572	Module connection PCB for FireWIN, VarioWIN	0	9999999999999
1570	041036	Module guide complete for FireWIN, VarioWIN	0	9999999999999
1580	046394	Proximity switch mounting bracket for VarioWIN	0	9999999999999
1590	046972	Ash compaction motor, coasting surface cleaning for FireWIN, VarioWIN	0	9999999999999
1610	012530	Grate shaking motor mounted replacement: 012517 for BioWIN10-26, FireWIN, VarioWIN	0	9999999999999
1620	044158	Blower motor with cable for blower for SilvaWIN, LogWIN, FireWIN, BioWIN XL 35-60, EasyWIN Premium 180, LogWIN Premium 180-505	0	9999999999999
1630	044944	Auger motor mounted replacement ET: 045907 for FireWIN, VarioWIN	0	9999999999999
1640	031156	Hexagon nut M10 DIN 439	0	9999999999999
1650	033097	Nut (low) DIN 439 - B M12 - 04 - galvanised	0	9999999999999
1660	016624	Nut DIN 934 - M12 - 8 - galvanised for VarioWIN, FireWIN, EasyWIN Klassik/Premium 180, LogWIN Premium 180-505	0	9999999999999
1670	016551	Hexagon nut M3 DIN 934	0	9999999999999
1680	016586	Hexagon nut M5 DIN 934	0	9999999999999
1690	016594	Hexagon nut M6 DIN 934	0	9999999999999
1700	016596	Nut DIN 934 - M6 - A2 for VarioWIN, FireWIN, BioWIN10-26, BioWIN XL 35-60	0	9999999999999
1710	015992	Nut M8 DIN 934 V2 - LogWIN Klassik pellet ready	0	9999999999999
1720	016565	Hexagon nut M5 with flange and gearing (not illustrated)	0	9999999999999
1730	045612	Ash compactor coasting surface plate, front for FireWIN, VarioWIN	0	9999999999999
1740	045611	Ash compactor coasting surface plate, rear for FireWIN, VarioWIN	0	9999999999999
1750	006832	Proximity switch M12, inductive	0	9999999999999
1760	009342	Proximity switch, inductive M8x1 for VarioWIN, FireWIN, BioWIN 10-26	0	9999999999999
1770	006821	Proximity switch, capacitive	0	9999999999999
1780	051645	Power supply unit 12V	0	9999999999999
1790	006849	O-ring FPM70 45 x 4	0	9999999999999
1800	006766	Feather key, without tightening DIN6885 A 6x6x28 mm for PMX, BioWIN10-26, FireWIN, VarioWIN, BioWIN XL 35-60	0	9999999999999
1810	011997	de: Platine FMP -V V6.50 VarioWIN	0	9999999999999
1820	007609	PCB holder	0	9999999999999
1830	007210	Primary air pin	0	9999999999999
1840	000299	Silicone buffer	0	9999999999999
1850	006399	HUPA pump 15-4.0 U130mm for AccuWIN, AccuWIN Solar, VarioWIN, FireWIN	0	9999999999999
1855	006419	Pump HEP 15-4.0 E 130 mm - Energy savings pump for FireWIN, VarioWIN	0	9999999999999
1860	012139	Pump screw connection DN3/4“-1“ - brass for FireWIN, VarioWIN	0	9999999999999
1870	044780	Exhaust pipe cleaning cover for FireWIN, VarioWIN	0	9999999999999
1880	044912	Clearer flat, complete for FireWIN, VarioWIN	0	9999999999999
1890	007655	Knurled nut with through-hole thread M5 SW for VarioWIN, FireWIN,BioWIN10-26	0	9999999999999

Item no.	Article no.	Description	Serialnumber from	Serialnumber t
1895	002023	Reduction nipple 1“-3/4“ for VarioWIN	0	9999999999999
1900	045025	Reduction nipple 3/8“-3/4“, turned for FireWIN, VarioWIN	0	9999999999999
1910	046158	Cleaning linkage, complete for FireWIN from batch 10, VarioWIN	0	9999999999999
1920	046570	Cleaning tool / removal device for cone for BioWIN 10 from batch30, VarioWIN	0	9999999999999
1930	005025	Power relay OMRON G7L-2A-BUB 200/240AC for PMX,BioWIN XL, BioWIN10-26,FireWIN,VarioWIN, BioWIN XL 35-60	0	9999999999999
1940	046474	Catch for panelling for VarioWIN	0	9999999999999
1950	012499	Grooved ball bearing	0	9999999999999
1960	045023	Hot water tank flow pipe 3/4“x118.5 mm - black for FireWIN, VarioWIN	0	9999999999999
1970	044198	Pipe for mixer group 3/4“x81.5 mm - black for FireWIN, VarioWIN	0	9999999999999
1980	046437	Pipe clamp,Ø 68x200 for VarioWIN	0	9999999999999
1990	045212	Grate plate, top for BioWIN 10/15 from batch 30, FireWIN from batch 10, VarioWIN	0	9999999999999
2000	044205	Return complete for FireWIN, VarioWIN	0	9999999999999
2010	044201	Return pipe for FireWIN, VarioWIN	0	9999999999999
2020	046282	Rear wall for VarioWIN	0	9999999999999
2030	007103	Cladding door hinge for LogWIN Premium 180-505, VarioWIN, BioWIN XL 35-60	0	9999999999999
2040	018058	U-washer	0	9999999999999
2050	017183	U-Washer DIN 125B - M12 - galvanised for VarioWIN, FireWIN, BioWIN XL 35-60	0	9999999999999
2060	024765	Washer DIN 125 - 5 - galvanised for VarioWIN	0	9999999999999
2070	024766	Washer DIN 125 - 6 - galvanised for VarioWIN	0	9999999999999
2080	024767	Washer DIN 125 - M8 - galvanised, ISO 7089 for VarioWIN, BioWIN 10-26, BioWIN XL 35-60, EasyWIN Premium 180	0	9999999999999
2090	021474	Disc 3 DIN134	0	9999999999999
2100	018309	Disc 5 DIN134	0	9999999999999
2110	020540	U-Washer DIN 134 - M6 - galvanised for VarioWIN, FireWIN	0	9999999999999
2120	018066	Washer DIN 134 - 8 - galvanised for VarioWIN	0	9999999999999
2130	024780	Disc 10 ISO7089	0	9999999999999
2135	031753	Disc 6 ISO 7093	0	9999999999999
2140	031755	Disc 8 ISO 7093	0	9999999999999
2150	016025	Silicone hose PU1, diameter 25x320, secondary air, independent of room air for FireWIN, VarioWIN	0	9999999999999
2160	016026	Silicone hose SG1M, diameter 32x330, primary air, independent of room air for FireWIN, VarioWIN	0	9999999999999
2170	046239	Auger 1307 mm for VarioWIN	0	9999999999999
2170	046240	Auger 761 mm for VarioWIN	0	9999999999999
2170	046241	Auger 1853 mm for VarioWIN	0	9999999999999
2200	045093	Direct auger for VarioWIN	0	9999999999999
2210	044612	Daily use container auger for FireWIN, VarioWIN	0	9999999999999
2220	012520	Auger flange 30° pour VarioWIN	0	9999999999999
2220	012529	Auger flange 20° for VarioWIN	0	9999999999999
2240	046441	Auger tube 773,5 mm for VarioWIN	0	9999999999999
2240	046465	Auger tube 1320 mm for VarioWIN	0	9999999999999
2240	046466	Auger tube 1865 mm for VarioWIN	0	9999999999999
2270	045094	Direct auger tube for VarioWIN	0	9999999999999
2280	044896	Auger tube with friction bearing for daily use container, cpl., mounted for FireWIN, VarioWIN	0	9999999999999
2290	009219	Screw door handle bearing M12 (WAF17/30) - galvanised for HMX, BioWIN10-26, FireWIN, VarioWIN, EasyWIN Klassik/Premium 180	0	9999999999999
2300	045076	Screw M6 (with U-washer and nut) for heating surface cleaning complete for PMX, BioWIN10-26, FireWIN, VarioWIN	0	9999999999999
2320	045223	Inner driving rod for BioWIN 10-26 from batch 30, VarioWIN, FireWIN	0	9999999999999
2330	045232	Driving rod, complete for BioWIN10-26 à partir de lot 30 , FireWIn à partir de lot 10, VarioWIN	0	9999999999999
2340	046090	Container protective grille for VarioWIN	0	9999999999999
2350	041498	Protective tube for exhaust gas sensor	0	9999999999999
2360	045617	Swivel shaft complete, ash compactor for FireWIN, VarioWIN	0	9999999999999
2370	012140	Gravity brake SBM 3/4“ G1 IG/AG for VarioWIN	0	9999999999999
2380	016752	Hexagon screw DIN 933 - M4x40 - 8.8 - galvanised for VarioWIN	0	9999999999999
2390	016756	Hexagon screw M5x10 DIN 933	0	9999999999999

Item no.	Article no.	Description	Serialnumber from	Serialnumber t
2400	017020	Hexagon screw Niro DIN 933 - M5x12 - A2 for HMX, FireWIN, VarioWIN	0	9999999999999
2410	015059	Hexagon screw DIN 933 - M5x35 - 8.8 - galvanised for VarioWIN, FireWIN	0	9999999999999
2420	015026	Hexagon screw DIN 933 - M6x10 - 8.8 - galvanised for VarioWIN, FireWIN	0	9999999999999
2430	017051	Hexagon screw M6x12 DIN 933 (not illustrated)	0	9999999999999
2440	024759	Hexagon screw DIN 933 - M6x16 - 8.8 - galvanised for VarioWIN	0	9999999999999
2450	015471	Hexagon screw M6x20 DIN 933	0	9999999999999
2460	015041	Hexagon screw DIN 933 - M6x25 - 8.8 - galvanised for VarioWIN, FireWIN	0	9999999999999
2470	015134	Hexagon screw M8x16 DIN 933	0	9999999999999
2480	017086	Hexagon screw M8x20 DIN 933 (not illustrated)	0	9999999999999
2490	017873	Hexagon screw DIN 933 - M8x20 - A2 for VarioWIN, FireWIN	0	9999999999999
2500	032654	Hexagon screw DIN 933 - M8x45 - 8.8 - galvanised for VarioWIN	0	9999999999999
2510	031545	Hexagon screw M5x12 DIN 7500 (not ilustrated)	0	9999999999999
2520	031549	Hexagon screw M6x12 DIN 7500	0	9999999999999
2530	017882	Thread-rolling hexagon screw DIN 7500 - M8x16 TT - galvanised for VarioWIN, EasyWIN Klassik/Premium 180	0	9999999999999
2540	027392	Hexagon pin key with T-handle 10x200 for VarioWIN, BioWIN XL 35-60	0	9999999999999
2550	046510	Left side panel, white for VarioWIN	0	9999999999999
2550	046511	Left side panel, red for VarioWIN	0	9999999999999
2570	046512	Right side panel, white for VarioWIN	0	9999999999999
2570	046513	Right side panel, red for VarioWIN	0	9999999999999
2590	017222	Countersinking screw DIN 965 - M3x12 - galvanised with cross slot for VarioWIN, FireWIN, EasyWIN Klassik/Premium 180	0	9999999999999
2600	017223	Countersinking screw DIN 965 - M4x70 - galvanised with cross slot for VarioWIN, FireWIN	0	9999999999999
2610	016863	Countersinking screw M6x16	0	9999999999999
2620	001031	ASL004 Safety valve 1/2“ 2.5 bar for GWX,OEX,OE/KN/M,ASL,GKW,GTX,ASN,GKA/E,MIRA,FireWIN,Vesto Art.Nr.:49292, VarioWIN, fittings ca	0	9999999999999
2630	003228	6.3A fuse (not illustrated)	0	9999999999999
2640	003663	Fuse holder	0	9999999999999
2650	016724	Lock nut DIN 985 - M4 - galvanised for VarioWIN	0	9999999999999
2660	016732	Lock nut DIN 985 - M6 - galvanised for VarioWIN	0	9999999999999
2670	016171	Locking ring Ø20x1.2	0	9999999999999
2680	009231	Silicone U-section, black 6x7,5 replacement:046057 (FW) or 046056 (HMX,PMX) for HMX, PMX, FireWIN, VarioWIN	0	9999999999999
2690	016073	WERV013 Silicone seal, black 310ml	0	9999999999999
2700	009540	Spatula	0	9999999999999
2710	018666	Clamping pin DIN 1481 - Ø4x20, for 3-way changeover unit for PMX, VarioWIN (* not illustrated), VestoWIN Premium 200-202, VestoWIN	0	9999999999999
2720	018184	Clamping pin DIN 1481 - Ø 5x14 for VarioWIN	0	9999999999999
2730	010286	ASL0021 Shut-off valve 1/4“ internal for pressure gauge R1/2“ for ASL/M,ÖR,SH,OEM,OEN,GTX,ASN,OEX,MIRA,FireWIN,fittings cabinet Ve	0	9999999999999
2740	005010	Steel collar 3/4“x50, black for VarioWIN, FireWIN	0	9999999999999
2750	070323	Plug, 3-pin, black	0	9999999999999
2760	070162	Plug, 4-pin, black for auger motor for VarioWIN, FireWIN	0	9999999999999
2770	070374	Plug, 7-pin (3-pin black, 4-pin brown) for blower motor for FireWIN, VarioWIN	0	9999999999999
2780	012240	Positioning drive SSY319 (230V, 50 Hz, 150s) for VarioWIN, FireWIN	0	9999999999999
2790	009992	Leg - JTB30 - M10x60 with slot for OEX, NBA, MIRA, VarioWIN, FireWIN	0	9999999999999
2800	009991	Leg - JTLO 38 - M8x16 for VarioWIN	0	9999999999999
2810	047115	Spur gear Z=28; m=1.5, for shake-out drive for FireWIN from batch 10, BioWIN 10/15 from batch 30, VarioWIN	0	9999999999999
2820	044613	Spur gear Z=32; m=2.5 for FireWIN from batch 6, VarioWIN - For units up to batch 5 009465 and 044612 must be replaced! -	0	9999999999999
2830	045771	Spur gear M2 Z45	0	9999999999999
2840	000353	KSN091 WAF Plug 1/2“ - no. 290 1- black No. 49304 for KSN, OEK, VestoWIN Klassik 170-220, FireWIN, VarioWIN	0	9999999999999
2850	012042	Plug 1/2“ MS, self-sealing, brass VER923 for VarioWIN, FireWIN	0	9999999999999
2860	044778	Jet protection plate, complete for FireWIN, VarioWIN	0	9999999999999
2870	006820	MES007 Immersion sensor (exhaust gas sensor) Pt 1000 for PMX, FireWIN, VarioWIN, BioWIN 10-26, BioWIN XL 35-60	0	9999999999999
2880	502186	MES009M Immersion sensor	0	9999999999999
2890	000027	KSL332 Immersion sleeve 130 mm long for KSL/ZHL,GKA/E,fittings cabinet Vesto200, VarioWIN	0	9999999999999
2900	012536	Disc spring DIN2093 - 16x8.2x0.6 for VarioWIN, FireWIN	0	9999999999999

Item no.	Article no.	Description	Serialnumber from	Serialnumber t
2910	007626	Thermocouple	0	9999999999999
2920	005672	Thermostat LS1+100-6U	0	9999999999999
2930	045623	Ash pan partition plate for FireWIN, VarioWIN	0	9999999999999
2940	046556	Funnel cover, left/right for VarioWIN	0	9999999999999
2950	039750	Funnel base for VarioWIN	0	9999999999999
2960	039754	Funnel side panel, rear for VarioWIN	0	9999999999999
2970	039752	Funnel side panel, right/left for VarioWIN	0	9999999999999
2980	039753	Funnel side panel, front for VarioWIN	0	9999999999999
2990	000092	T-piece 3/4“ - no. 130 - black for VarioWIN, FireWIN	0	9999999999999
2995	002024	T-piece, brass for FireWIN, VarioWINF	0	9999999999999
2997	003208	Grommet 10x17.5x1.2	0	9999999999999
3000	009553	Ash door handle rod for FireWIN, VarioWIN	0	9999999999999
3010	009549	Heating door handle rod for FireWIN, VarioWIN	0	9999999999999
3020	007083	Door stone for heating door for VarioWIN	0	9999999999999
3030	044588	Door locking bar for FireWIN, VarioWIN	0	9999999999999
3040	044591	Door locking latch for FireWIN, VarioWIN	0	9999999999999
3050	012052	Union nut 1/2“ - brass for VarioWIN, VestoWIN Klassik 170-220	0	9999999999999
3060	011770	Union nut 3/4“ - no. 374 - black WAX933 for VarioWIN, FireWIN	0	9999999999999
3070	006721	Baffle plate for FireWIN, VarioWIN	0	9999999999999
3080	006012	Silicone U-section, approx. 7x8.5 mm for VarioWIN, FireWIN, BioWIN 10-26	0	9999999999999
3090	000446	Valve insert for three-way valve 3/4“ from the VC-Serie, VCZZ6000B for VarioWIN, FireWIN	0	9999999999999
3100	012528	Auger connector, Ø15.9, h10x165 mm for VarioWIN	0	9999999999999
3105	046285	Connecting plate, coated, white for VarioWIN	0	9999999999999
3105	046546	Connecting plate, coated, red for VarioWIN	0	9999999999999
3110	046279	Connecting plate, top for VarioWIN	0	9999999999999
3120	044782	Connecting piece HFR, coasting surface cleaning for FireWIN, VarioWIN	0	9999999999999
3130	045610	Compactor plate, ash compaction for FireWIN, VarioWIN	0	9999999999999
3140	046290	Rear cladding, white for VarioWIN	0	9999999999999
3140	046545	Rear cladding, red for VarioWIN	0	9999999999999
3160	001306	Screw connection male thread D 1402, 3/4“x18 mm AG18 for FireWIN, VarioWIN	0	9999999999999
3170	007055	Flow pipe for FireWIN, VarioWIN	0	9999999999999
3180	046244	White panelling for VarioWIN	0	9999999999999
3180	046553	Red/grey panelling for VarioWIN	0	9999999999999
3200	009948	Wago terminal block 261; 2-pin WMS 1-2, 3-piece for VarioWIN, FireWIN	0	9999999999999
3210	006833	Wago terminal block 261; 4-pin "12V GND"	0	9999999999999
3220	006834	Wago terminal block 261; 4-pin "safety 1-4"	0	9999999999999
3230	009960	Wago terminal block 261; 8-pin 230V extnd. for VarioWIN, FireWIN, BioWIN10-26, BioWIN XL 35-60 (*not illustrated)	0	9999999999999
3240	009891	Wago terminal block 261; 11-pin safety 1-11 for FireWIN, VarioWIN	0	9999999999999
3250	009966	Wago terminal block 261; 11-pin orange extra-low voltage Extnd. for VarioWIN, FireWIN, BioWIN XL 35-60	0	9999999999999
3260	009968	Wago terminal block 261; 13-pin orange extra-low voltage (no. 1-13), for VarioWIN, FireWIN, BioWIN 10-26, BioWIN XL 35-60 (*not il	0	9999999999999
3270	046439	Maintenance pipe for VarioWIN	0	9999999999999
3280	012516	Shaft for motor, Ø = 20 h7x96.3mm for VarioWIN	0	9999999999999
3290	045216	Limit switch bracket for BioWIN 10-26 from batch 30, VarioWIN, FireWIN	0	9999999999999
3295	045024	Elbow adapter with G 14“ for VarioWIN	0	9999999999999
3300	005563	Rocker switch SW/GR 0-1	0	9999999999999
3310	044614	Toothed washer for FireWIN, BioWIN XL 35-60, VarioWIN	0	9999999999999
3320	009465	Rotary feeder for FireWIN from batch 6, VarioWIN	0	9999999999999
3330	046435	Centring plate for VarioWIN	0	9999999999999
3335	046274	Auxiliary sheet metal - direct auger for VarioWIN	0	9999999999999
3337	053851	de: Zündelement inkl. Kabel beigelegt.	0	9999999999999
3337	055201	Ignition element BioWIN10-26, FireWIN from lot 15, VarioWIN from lot 15 BioWIN XL, LWK	0	9999999999999

Item no.	Article no.	Description	Serialnumber from	Serialnumber t
3337	055202	Modifications set ignition	0	9999999999999
3340	009567	Cylindrical button 519-28-M10 for FireWIN, VarioWIN	0	9999999999999
3350	017048	Shoulder screw M8 10x25 ISO 7379	0	9999999999999
3360	033531	Cylinder-head screw, hexagon socket ISO 4762 - M6x10 - 8.8 - (DIN 912) for VarioWIN, BioWIN 10-26	0	9999999999999
3370	017049	Cylinder-head screw, hexagon socket ISO 4762 - M8x70 - 8.8 - galva. (DIN 912) for VarioWIN, FireWIN, BioWIN XL 35-60	0	9999999999999
3380	020117	Cylinder-head screw, hexagon socket ISO 4762 - M12x25 - 8.8 - galva. (DIN 912) for VarioWIN, FireWIN, BioWIN10-26, LogWIN Premium	0	9999999999999
3390	012537	Cylinder-head screw, hexagon socket M6x10, special version with tall head for VarioWIN, FireWIN	0	9999999999999

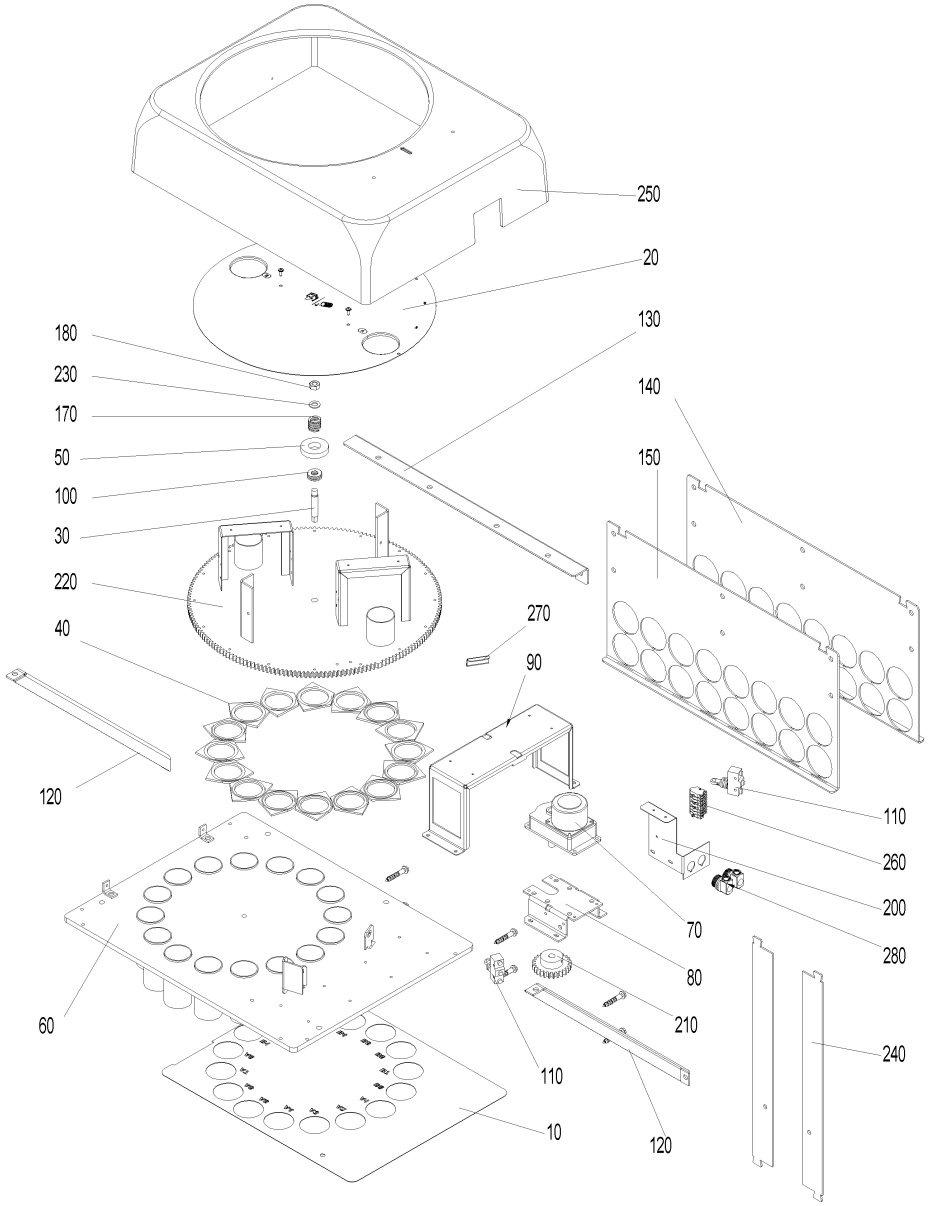
250
20
130
140
150
180
230
170
50
100
30
220
40
270
90
120
110
260
200
280
70
80
210
240
60
110
10
120

Item no.	Article no.	Description	Serialnumber from	Serialnumber to
10	047448	Cover plate BIO008	0	99999999999999999
20	048108	Cover disc red BIO008	0	99999999999999999
25	018140	Cylinder screw 4.2x13 DIN7981ST (not illustrated)	0	99999999999999999
30	006927	Bolt for mounting for 3-way changeover unit for PMX	0	99999999999999999
40	006884	Seal ring for 3-way changeover unit	0	99999999999999999
50	006929	Axial bearing seal for 3-way changeover unit for PMX from batch 11	0	99999999999999999
55	000320	Brass dowel M8X30	0	99999999999999999
56	033472	Nylon dowel S8	0	99999999999999999
60	047696	Flange plate BIO008	0	99999999999999999
65	018087	Hexagon head wood screws 6x50 vz., DIN 571	0	99999999999999999
70	046617	Gear motor with condense, for 3-way changeover unit for BioWIN XL 35-60	0	99999999999999999
80	042441	Motor bracket for 3-way changeover unit	0	99999999999999999
90	047701	USE 8 bracket BIO008	0	99999999999999999
100	006925	Axial ball bearing, for 3-way changeover unit for PMX from batch 11	0	99999999999999999
110	006936	Ash removal microswitch Z-15GQ21-B for 3-way changeover unit for PMX, BioWIN XL 35-60	0	99999999999999999
120	047709	Assembly support	0	99999999999999999
130	047706	Assembly bracket	0	99999999999999999
140	047707	Hose feed-through	0	99999999999999999
150	048124	Printed hose feed-through	0	99999999999999999
160	006875	Hose clip 40-60	0	99999999999999999
170	006926	Spiral spring, for 3-way changeover unit for PMX from batch 11	0	99999999999999999
180	016616	Hexagon nut M10, DIN934 for 3-way changeover unit	0	99999999999999999
190	045304	Pellet feed probe for 3-way changeover unit	0	99999999999999999
194	016553	Hexagon nut M8 with flange and gearing	0	99999999999999999
195	015028	Hexagon screw M8 x 25 SZ	0	99999999999999999
200	042442	Connector bracket	0	99999999999999999
210	006930	Galvanised spur gear for 3-way changeover unit * not illustrated	0	99999999999999999
220	047699	End disc complete	0	99999999999999999
230	018058	U-washer	0	99999999999999999
235	020540	U-Washer DIN 134 - M6 - galvanised for VarioWIN, FireWIN	0	99999999999999999
240	048131	Connectors BIO008	0	99999999999999999
250	048126	Cladding	0	99999999999999999
260	006921	Wago terminal block 261, 9-pin for 3-way changeover unit	0	99999999999999999
270	047704	Zero point bracket	0	99999999999999999
280	001884	Strain relief USR 400 for 3-way changeover unit	0	99999999999999999

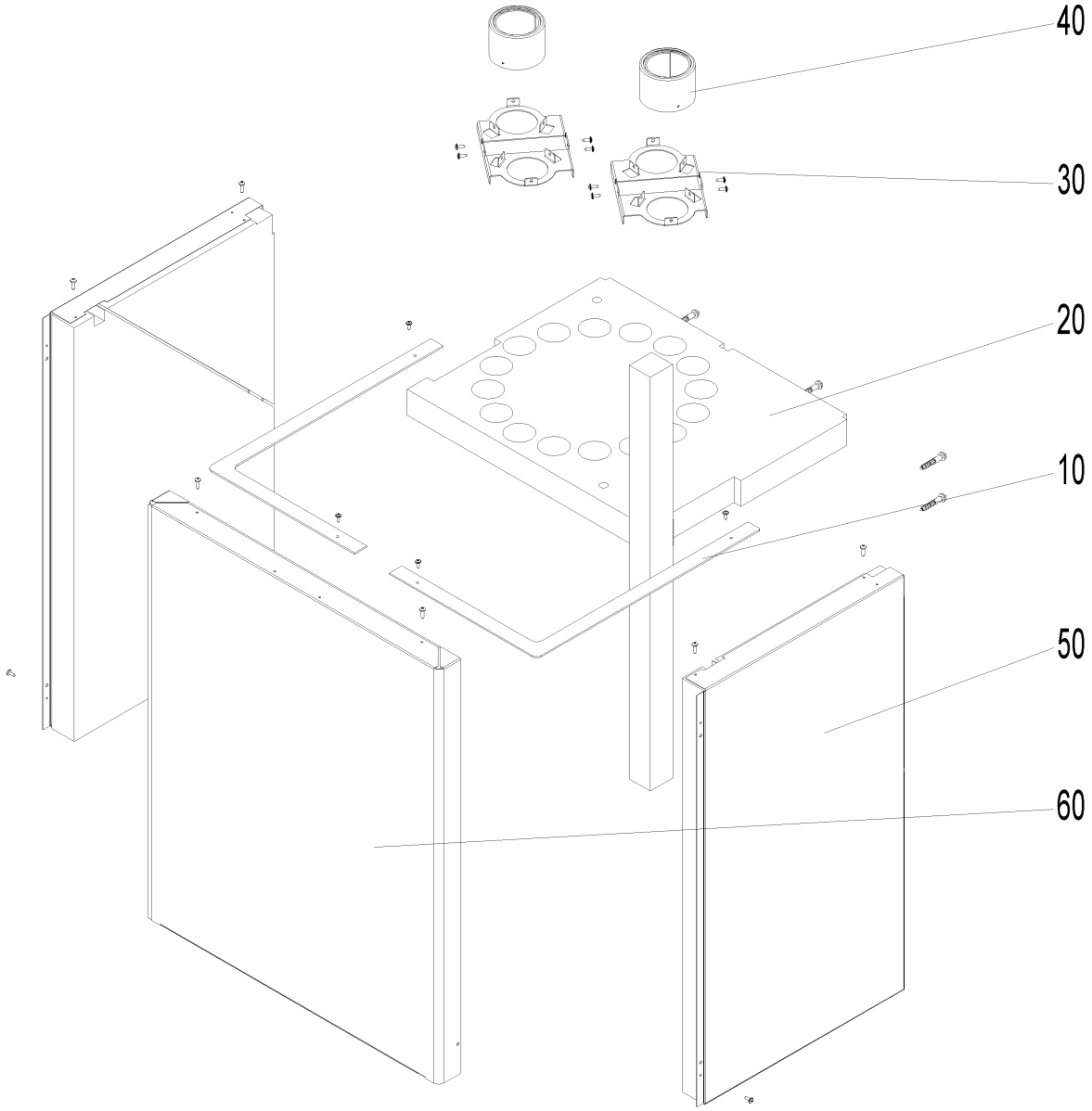
40
30
20
10
50
60

Item no.	Article no.	Description	Serialnumber from	Serialnumber to
10	048107	Cover plate red BIO009	0	99999999999999999
15	018139	Cylinder screw 4.2x13 DIN7981SP (not illustrated)	0	99999999999999999
16	018090	Cyl. screw 4,8x16	0	99999999999999999
20	047442	Top insulation BIO009	0	99999999999999999
30	045979	Fire protection collar bracket for 3-way changeover unit (BIO020)	0	99999999999999999
40	042539	Collar, complete with insert	0	99999999999999999
45	016461	Hexagon screw M8x80 DIN 933	0	99999999999999999
46	016553	Hexagon nut M8 with flange and gearing	0	99999999999999999
50	048128	Left/right cladding complete BIO009	0	99999999999999999
60	048127	Front cladding complete BIO009	0	99999999999999999
70	048127	Front cladding complete BIO009	0	99999999999999999

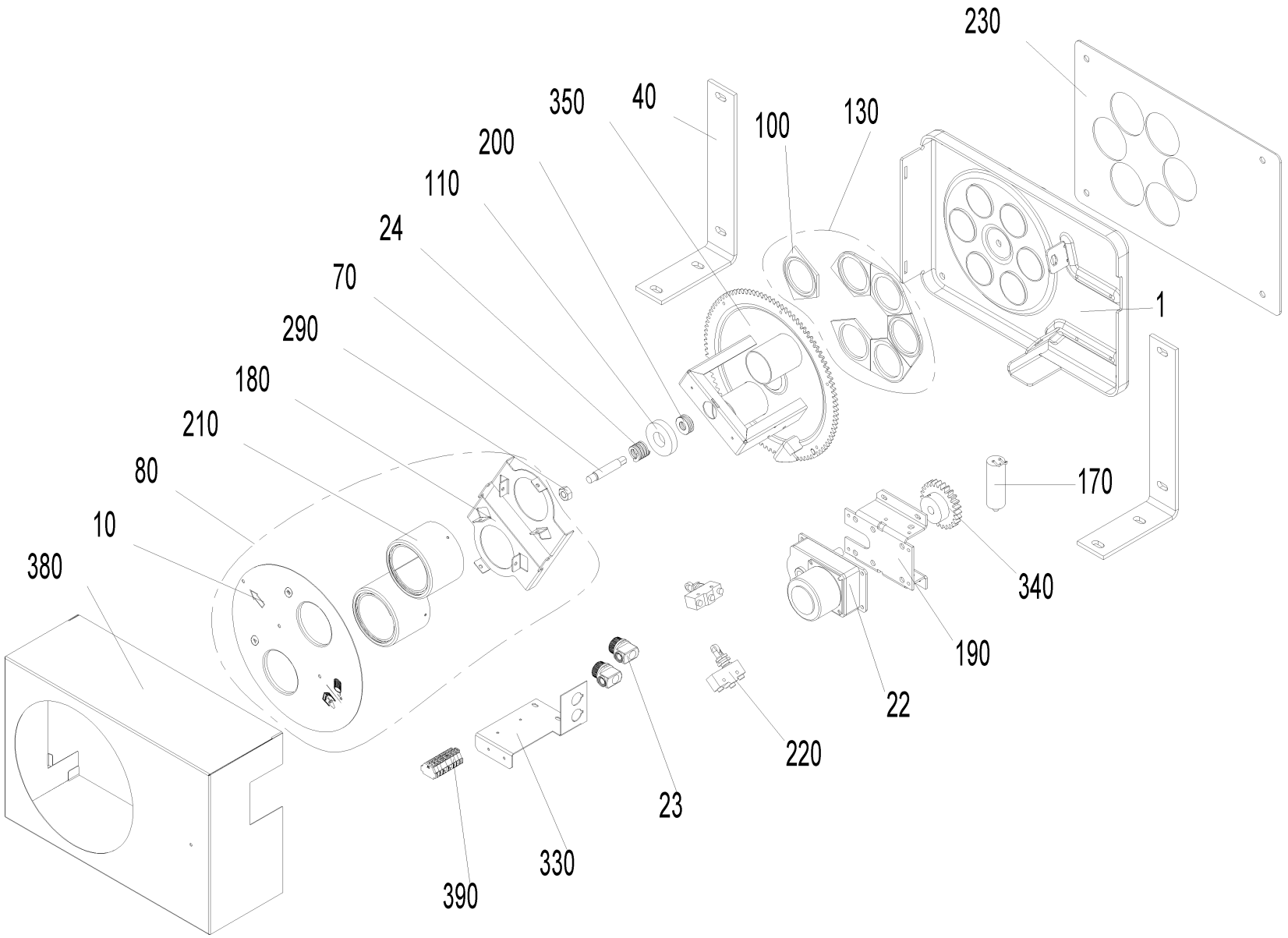
230
350
40
100
130
200
110
24
70
290
180
210
80
10
380
1
170
340
190
22
220
23
330
390

Item no.	Article no.	Description	Serialnumber from	Serialnumber to
10	042444	PMX042, BIO020 Cover disc for fire protection	0	99999999999999999
10	045982	BIO020 Cover disc with entry	0	99999999999999999
22	046617	Gear motor with condense, for 3-way changeover unit for BioWIN XL 35-60	0	99999999999999999
23	001884	Strain relief USR 400 for 3-way changeover unit	0	99999999999999999
24	006926	Spiral spring, for 3-way changeover unit for PMX from batch 11	0	99999999999999999
40	046284	Retaining bracket for 3-way changeover unit	0	99999999999999999
70	006927	Bolt for mounting for 3-way changeover unit for PMX	0	99999999999999999
80	045987	BIO021 Fire protection collars (2x) for 3-way changeover unit - (BIO020)	0	99999999999999999
100	006884	Seal ring for 3-way changeover unit	0	99999999999999999
110	006929	Axial bearing seal for 3-way changeover unit for PMX from batch 11	0	99999999999999999
130	042534	Seal set for feed, for 3-way changeover unit for PMX	0	99999999999999999
140	045975	Flange plate for 3-way changeover unit (BIO020)	0	99999999999999999
170	007335	Capacitor for motor F48/3 0.82 µF, for 3-way changeover unit for BioWIN XL 35-60	0	99999999999999999
180	045988	Mounting plate for 3-way changeover unit	0	99999999999999999
190	042441	Motor bracket for 3-way changeover unit	0	99999999999999999
200	006925	Axial ball bearing, for 3-way changeover unit for PMX from batch 11	0	99999999999999999
210	042537	Fire protection collar	0	99999999999999999
220	006936	Ash removal microswitch Z-15GQ21-B for 3-way changeover unit for PMX, BioWIN XL 35-60	0	99999999999999999
230	045988	Mounting plate for 3-way changeover unit	0	99999999999999999
290	016616	Hexagon nut M10, DIN934 for 3-way changeover unit	0	99999999999999999
330	045332	Connector bracket for 3-way changeover unit	0	99999999999999999
340	006930	Galvanised spur gear for 3-way changeover unit * not illustrated	0	99999999999999999
350	045974	End disc for 3-way changeover unit (BIO020)	0	99999999999999999
380	046872	Cladding for 3-way changeover unit (BIO020)	0	99999999999999999
390	006921	Wago terminal block 261, 9-pin for 3-way changeover unit	0	99999999999999999

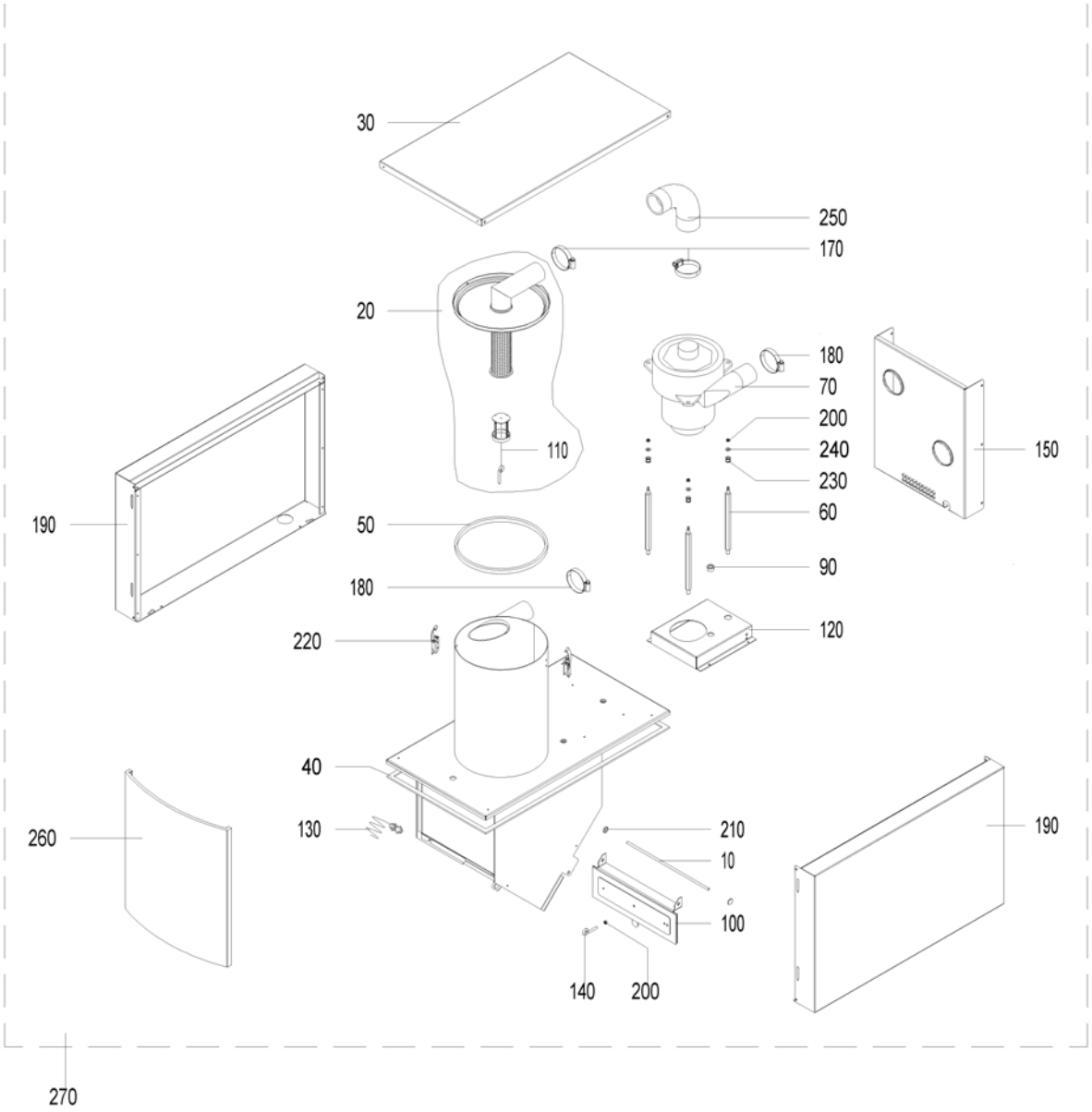
30
250
170
20
180
70
200
240
230
110
150
190
50
60
180
90
220
120
40
260
130
210
10
100
190
140
200
270

Item no.	Article no.	Description	Serialnumber from	Serialnumber to
10	042452	Feed axle	0	200829999
20	042133	de: Deckel Sammelkasten(Zyklon) kpl.mit Kolben Zuführung PMX,BioWIN	0	200829999
30	044243	Cover for feed, complete, assembled for BioWIN 10-26	0	200829999
40	000047	Sealing band 12x4mm SK for GMX,GENIO/MultiWIN,XENTA,BioWIN 10-26 (Only BioWIN Klassik), VarioWIN, FireWIN	0	200829999
50	042232	Seal section	0	200829999
60	006011	de: Distanzbolzen Zuführung BioWIN (bis Los 29)	0	200829999
70	044667	Blower motor 122151-12 for feed Conversion instructions for use with PMX 15-26 are enclosed! for BioWIN 10-26, PMX,BioWIN XL 35-6	0	200829999
80	044801	Cable for feed mains access point for BioWIN10-26 *) not illustrated	0	200829999
90	009542	Cable feed-through	0	200829999
100	042533	de: Klappe kpl. PMX/BioWIN-Zuführung (bei BioWIN bis einschließl. Los 29)	0	200829999
105	046194	Set of carbon brushes (2 pcs.) AMETEK/Lamb for PMX, BioWIN 10-26	0	200829999
110	042230	de: Kolben kpl. montiert Zuführung PMX, BioWIN (BioWIN bis einschl. Los 30)	0	200829999
120	042876	de: Luftkanal Zuführung BioWIN	0	200829999
130	006832	Proximity switch M12, inductive	0	200829999
140	016211	de: Ringschraube mit einseitig gebogenem Ring M5x30, verzinkt BioWIN	0	200829999
150	044242	de: Rückwand Zuführung kpl. mit Schallisolierung zu BioWIN 10-26 bis einschließlich Los 29	0	200829999
170	006864	Hose clips 57/20 N SK W2	0	200829999
180	006875	Hose clip 40-60	0	200829999
190	044241	de: Seitenwand Zuführung links/rechts kpl.mont.m.Schallisol. BioWIN 10-26 bis einsch. Los 29	0	200829999
200	016727	Lock nut M5	0	200829999
210	006897	Lock washer Ø 6	0	200829999
220	009546	Spring lock	0	200829999
230	009559	Rubber grommet DK 6-9-12-7	0	200829999
240	018309	Disc 5 DIN134	0	200829999
250	042135	de: Verbindung Sammelkasten (Zyklon) Pelletszuführung, BioWIN auf 250mm kürzen	0	200829999
260	044240	de: Vorderwand (h=428mm) Zuführung kpl.mont.mit Schallisolierung BioWIN 10-26 bis einschließlich Los 29	0	200829999
270	505138	BIO041Feed unit for BioWIN, height = 283 mm for BioWIN 10-26	0	200829999

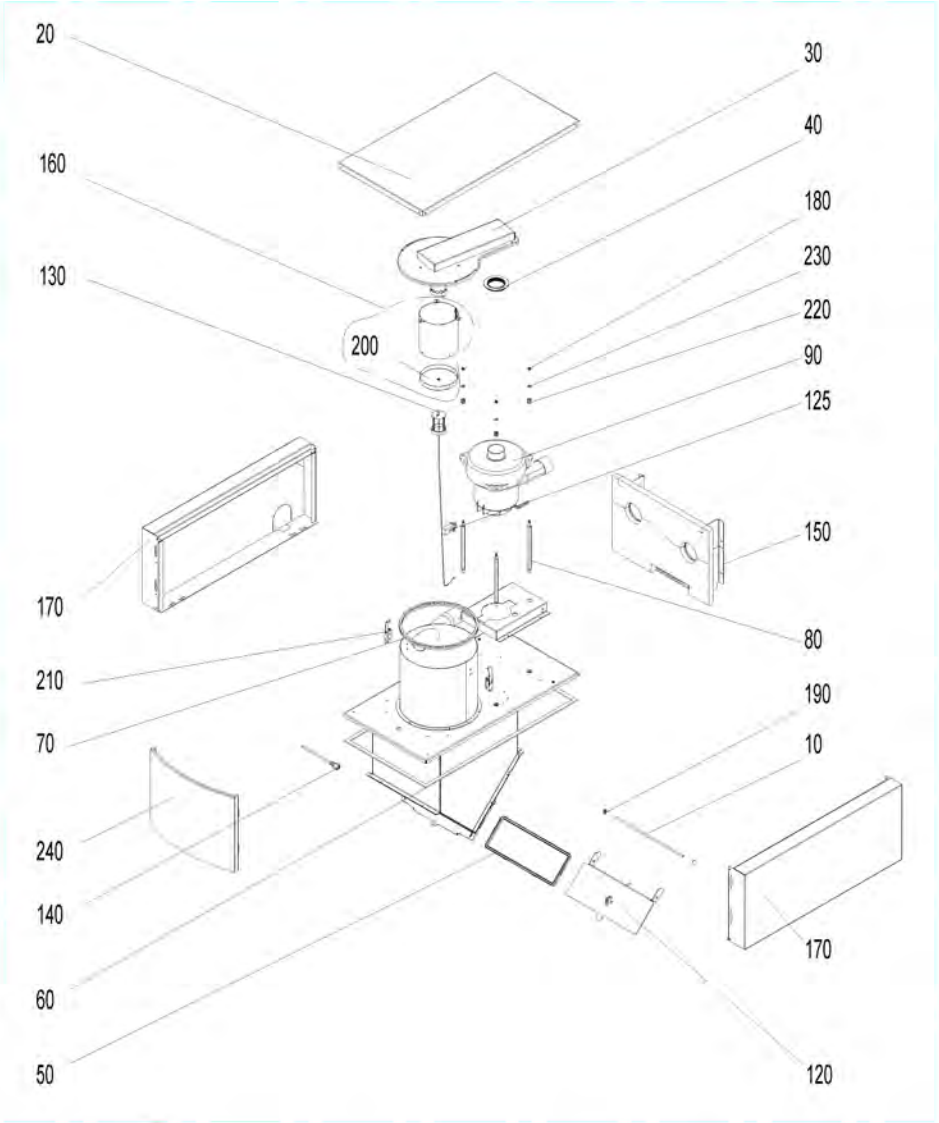
20
160
130
200
30
40
180
230
220
90
125
150
80
170
210
70
240
140
60
50
250
190
10
170
120
ohne Abbildung: , 100 110

Item no.	Article no.	Description	Serialnumber from	Serialnumber to
10	042452	Feed axle	200830000	99999999999999999
20	044243	Cover for feed, complete, assembled for BioWIN 10-26	200830000	99999999999999999
30	046166	Cyclone cover, fully sealed, new ET for BioWIN 10-26 from batch 30	200830000	99999999999999999
40	031253	Blower seal	200830000	99999999999999999
50	031257	Flap seal	200830000	99999999999999999
60	000047	Sealing band 12x4mm SK for GMX,GENIO/MultiWIN,XENTA,BioWIN 10-26 (Only BioWIN Klassik), VarioWIN, FireWIN	200830000	99999999999999999
70	042232	Seal section	200830000	99999999999999999
80	031256	Distance bolt	200830000	99999999999999999
90	044667	Blower motor 122151-12 for feed Conversion instructions for use with PMX 15-26 are enclosed! for BioWIN 10-26, PMX,BioWIN XL 35-6	200830000	99999999999999999
100	044801	Cable for feed mains access point for BioWIN10-26 *) not illustrated	200830000	99999999999999999
110	009542	Cable feed-through	200830000	99999999999999999
120	046165	Flap, complete, assembled for BioWIN 10-26 from batch 30	200830000	99999999999999999
125	046194	Set of carbon brushes (2 pcs.) AMETEK/Lamb for PMX, BioWIN 10-26	200830000	99999999999999999
130	046168	Piston, complete. for BioWIN 10-26 from batch 30	200830000	99999999999999999
140	006832	Proximity switch M12, inductive	200830000	99999999999999999
150	046164	Rear panel for feed complete with sound insulation for BioWIN 10-26 from batch 30	200830000	99999999999999999
160	046452	Partition plate, complete for BioWIN10-26	200830000	99999999999999999
170	046163	Side panel for left/right feed complete with sound insulation for BioWIN 10-26 from batch 30	200830000	99999999999999999
180	016727	Lock nut M5	200830000	99999999999999999
190	006897	Lock washer Ø 6	200830000	99999999999999999
200	045949	Sieve with eye	200830000	99999999999999999
210	009546	Spring lock	200830000	99999999999999999
220	009559	Rubber grommet DK 6-9-12-7	200830000	99999999999999999
230	018309	Disc 5 DIN134	200830000	99999999999999999
240	046162	Rear panel (h=283mm) for feed complete with sound insulation for BioWIN 10-26 from batch 30	200830000	99999999999999999
250	505138	BIO041Feed unit for BioWIN, height = 283 mm for BioWIN 10-26	200830000	99999999999999999

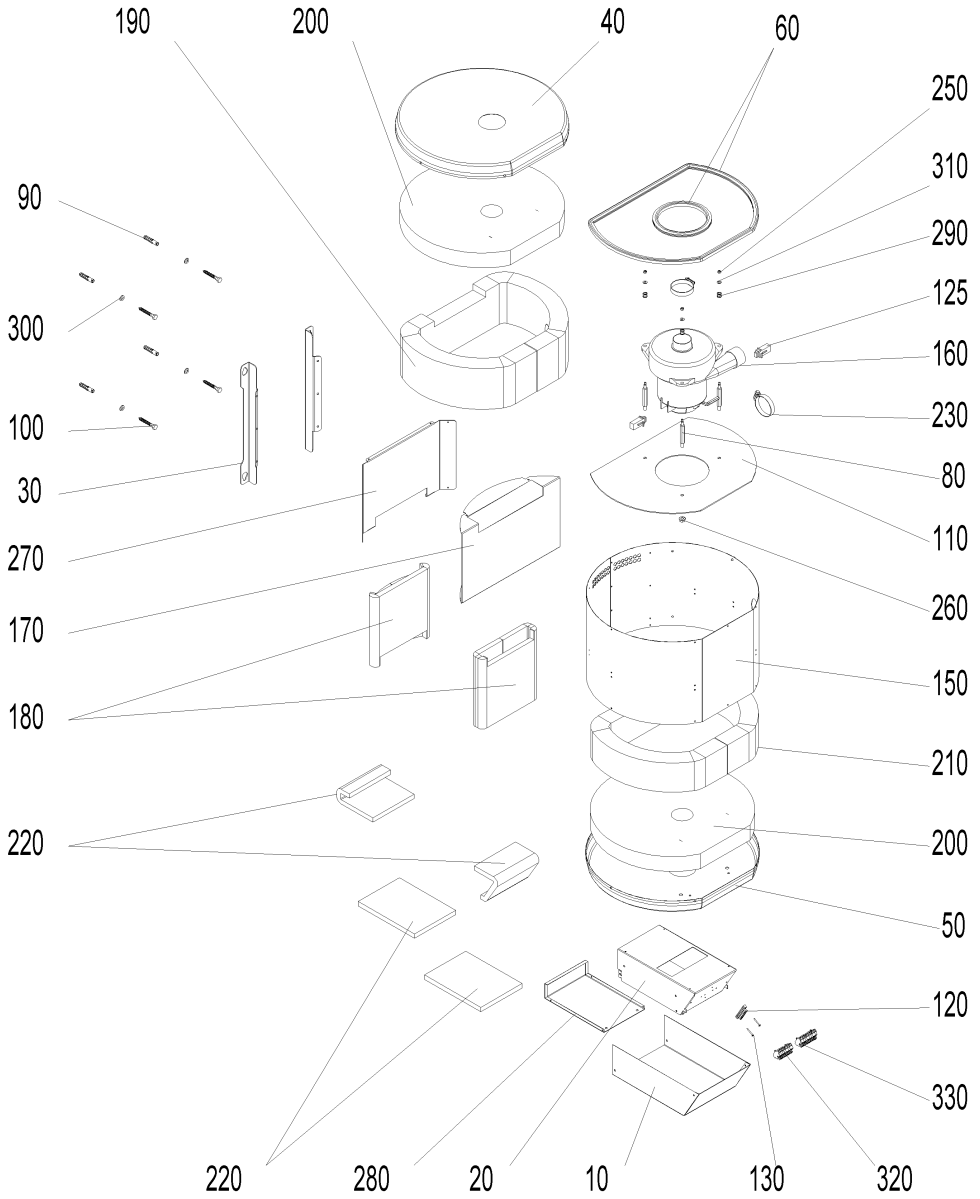
190
200
40
60
250
310
290
125
160
230
80
110
260
150
210
200
50
120
330
320
130
10
20
280
220
90
300
100
30
270
170
180
220

Item no.	Article no.	Description	Serialnumber from	Serialnumber to
10	053066	de: Abdeckung BW2	0	99999999999999999
20	053061	de: Ansaugkanal BW2	0	99999999999999999
30	053069	de: Befestigungsleiste BW2	0	99999999999999999
40	053605	de: Deckel oben BW2	0	99999999999999999
50	053062	de: Deckel unten BW2	0	99999999999999999
60	054369	de: Dichtungsprofil ET Saugturbine	0	99999999999999999
70	042232	Seal section	0	99999999999999999
80	053202	de: Distanzbolzen	0	99999999999999999
90	033469	de: Dübel F10 (BioWin)	0	99999999999999999
100	018089	de: Gestellschr. 8x60 vz., DIN 571 (MES)	0	99999999999999999
110	053058	de: Haltescheibe BW2	0	99999999999999999
120	009929	Terminal bar MS 8-pin 8x8mm for VarioWIN,FireWIN, BioWIN XL 35-60	0	99999999999999999
125	006859	Carbon brushes for blower motor	0	99999999999999999
130	019836	Cylinder screw 2.9x16 (not illustrated)	0	99999999999999999
140	065400	de: LITZE NR. 40 GE/GR	0	99999999999999999
150	053059	de: Mantel BW2	0	99999999999999999
160	044667	Blower motor 122151-12 for feed Conversion instructions for use with PMX 15-26 are enclosed! for BioWIN 10-26, PMX,BioWIN XL 35-6	0	99999999999999999
170	053060	de: Schallblech BW2	0	99999999999999999
180	053067	de: Schallmatte Abluft BW2 audiotec S260	0	99999999999999999
190	053064	de: Schallmatte ob audiotec S260	0	99999999999999999
200	053063	de: Schallmatte ob. un. audiotec S260	0	99999999999999999
210	053065	de: Schallmatte un. audiotec S260	0	99999999999999999
220	053070	de: Schallmatte Zuluft BW2 audiotec S260	0	99999999999999999
230	006875	Hose clip 40-60	0	99999999999999999
240	051387	Cheese head screw M5x10 Taptite, grey	0	99999999999999999
250	016727	Lock nut M5	0	99999999999999999
260	016553	Hexagon nut M8 with flange and gearing	0	99999999999999999
270	053604	de: Trennblech Abluft BW2	0	99999999999999999
280	053459	de: Trennblech Ansaugkanal BW2	0	99999999999999999
290	009559	Rubber grommet DK 6-9-12-7	0	99999999999999999
300	024767	Washer DIN 125 - M8 - galvanised, ISO 7089 for VarioWIN, BioWIN 10-26, BioWIN XL 35-60, EasyWIN Premium 180	0	99999999999999999
310	018309	Disc 5 DIN134	0	99999999999999999
320	006720	Wago terminal block 261 1-9, 8-pce. Emergency door switch/probe switching for BioWIN, VarioWIN, FireWIN, BioWIN10-26, BioWIN XL 35	0	99999999999999999
330	009966	Wago terminal block 261; 11-pin orange extra-low voltage Extnd. for VarioWIN, FireWIN, BioWIN XL 35-60	0	99999999999999999
340	016718	de: ZYL.-BOHRSCHR.4,2X13 DIN 7504N VERZ.M.KREUZSCH.	0	99999999999999999
350	018140	Cylinder screw 4.2x13 DIN7981ST (not illustrated)	0	99999999999999999

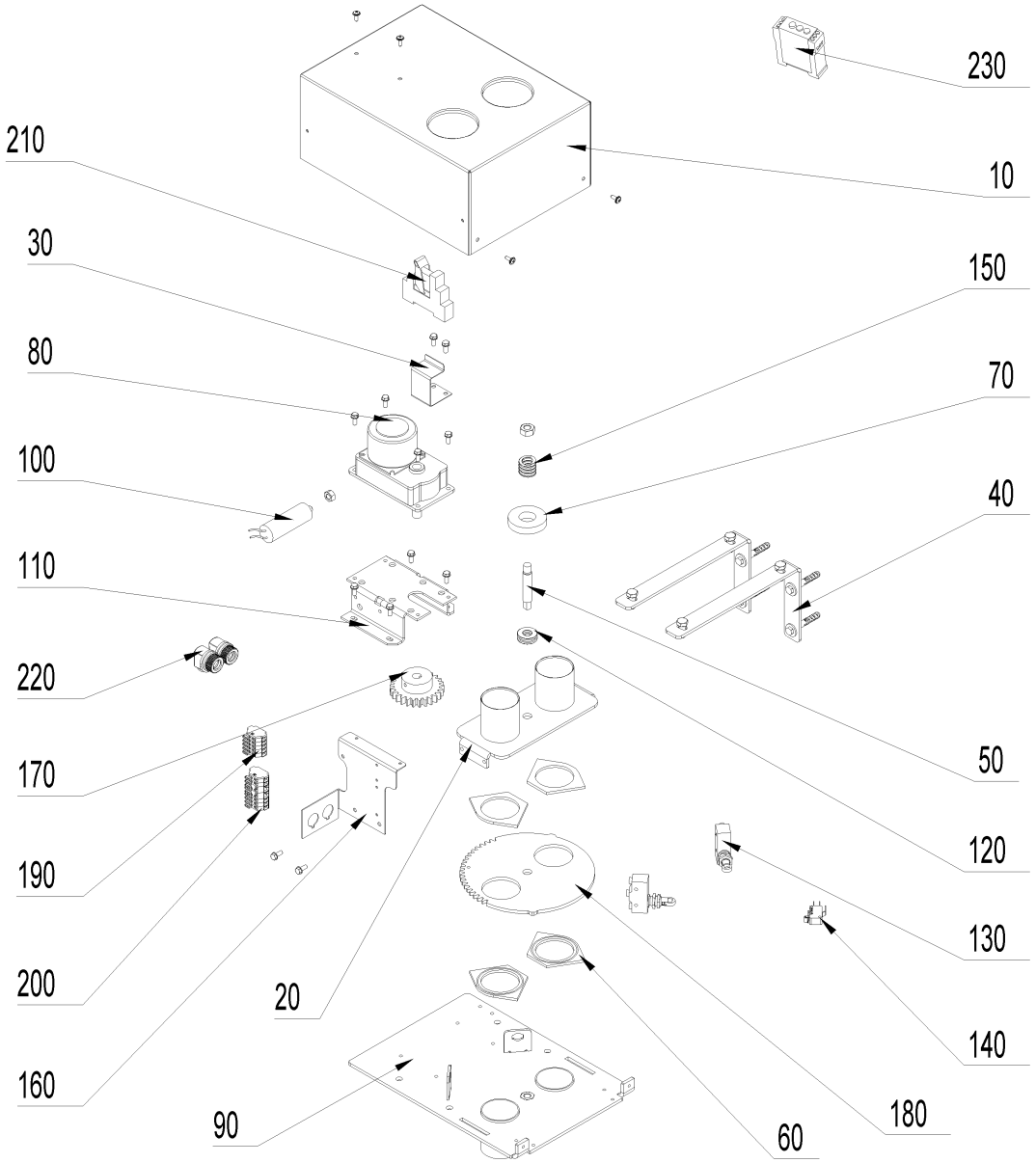
230
210
10
30
150
80
70
100
40
110
220
50
170
120
190
130
200
140
20
160
180
90
60

Item no.	Article no.	Description	Serialnumber from	Serialnumber to
10	051084	Cover BIO0602	0	99999999999999999
20	051081	Terminal block for boiler safety devic	0	99999999999999999
30	051086	Relay mounting plate	0	99999999999999999
40	051085	Retaining brackets	0	99999999999999999
50	006927	Bolt for mounting for 3-way changeover unit for PMX	0	99999999999999999
60	006884	Seal ring for 3-way changeover unit	0	99999999999999999
70	006929	Axial bearing seal for 3-way changeover unit for PMX from batch 11	0	99999999999999999
80	046617	Gear motor with condense, for 3-way changeover unit for BioWIN XL 35-60	0	99999999999999999
90	051077	Basic plate BIO0602	0	99999999999999999
100	007328	Capacitor for motor 0.68µF for PMX from batch 11, BioWIN XL 35-60	0	99999999999999999
110	042441	Motor bracket for 3-way changeover unit	0	99999999999999999
120	006925	Axial ball bearing, for 3-way changeover unit for PMX from batch 11	0	99999999999999999
130	006936	Ash removal microswitch Z-15GQ21-B for 3-way changeover unit for PMX, BioWIN XL 35-60	0	99999999999999999
140	009277	Air control microswitch	0	99999999999999999
150	052114	Spiral spring	0	99999999999999999
160	051086	Relay mounting plate	0	99999999999999999
170	006930	Galvanised spur gear for 3-way changeover unit * not illustrated	0	99999999999999999
180	051080	End disc	0	99999999999999999
190	009951	Wago terminal block 261; 1-6	0	99999999999999999
200	006921	Wago terminal block 261, 9-pin for 3-way changeover unit	0	99999999999999999
210	005026	OKE9281 Cable protection plate	0	99999999999999999
220	005479	Strain relief PG11	0	99999999999999999
230	003642	ZUB140 Time relay D6SQ-IT for shutt off-unit * not illustrated	0	99999999999999999

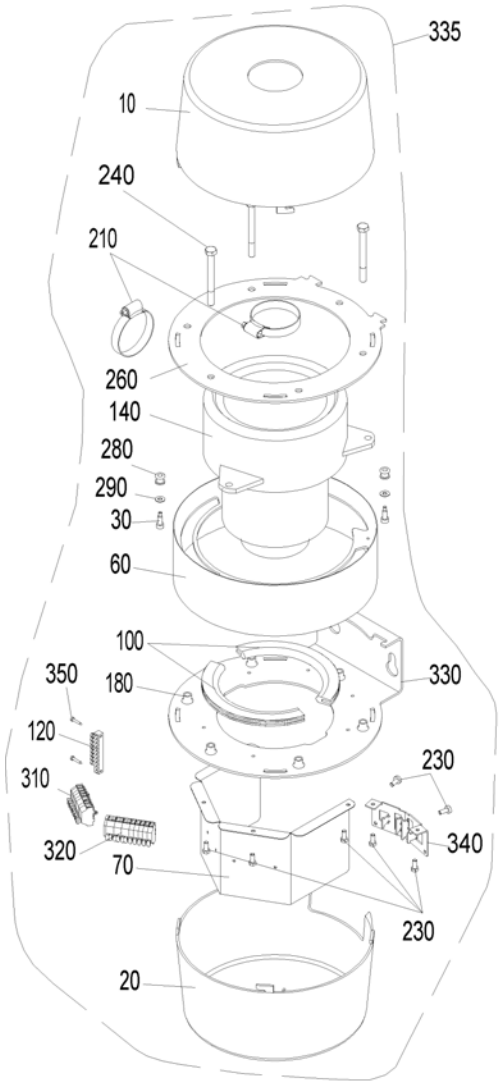
335
10
240
210
260
140
280
290
30
60
100
350
180
330
120
230
310
340
320
70
230
20

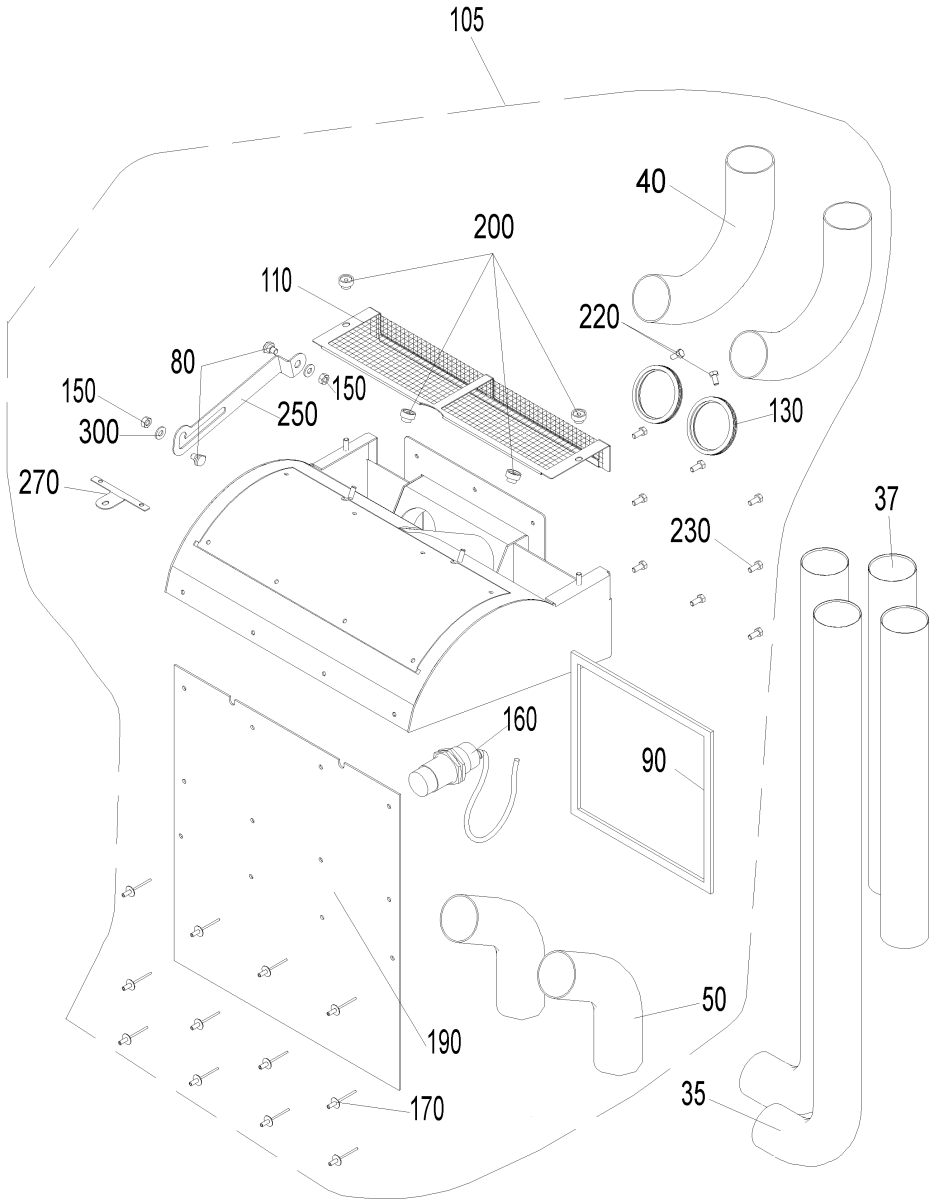
105
40
200
110
220
80
150
150
250
130
300
270
37
230
160
90
50
190
35
170

Item no.	Article no.	Description	Serialnumber from	Serialnumber to
10	009892	Top feed cover for FireWIN, BWXL35-60, VarioWIN	0	99999999999999999
20	009893	Bottom feed cover for FireWIN, BioWIN XL 35-60, VarioWIN	0	99999999999999999
30	003980	Collar screw M4 x 23 for MIRA, VarioWIN, FireWIN, BioWIN XL 35-60	0	99999999999999999
35	005063	Connection pipe curved 90° for FireWIN, VarioWIN	0	99999999999999999
37	005062	Connection pipe straight for FireWIN, VarioWIN	0	99999999999999999
40	005059	Connection pipe top for FireWIN, VarioWIN	0	99999999999999999
50	005058	Connection pipe bottom for FireWIN, VarioWIN	0	99999999999999999
60	045022	Turbine attachment for FireWIN, VarioWIN, BioWIN XL 35-60	0	99999999999999999
70	045016	Wago terminal block attachment for FireWIN, VarioWIN, BioWIN XL 35-60	0	99999999999999999
80	033091	Bolt DIN 1445 - 8h11 x 4 x 10 - St - galvanised for VarioWIN, FireWIN, BioWIN 10-26, BioWIN XL 35-60	0	99999999999999999
90	000047	Sealing band 12x4mm SK for GMX,GENIO/MultiWIN,XENTA,BioWIN 10-26 (Only BioWIN Klassik), VarioWIN, FireWIN	0	99999999999999999
100	045031	Seal section for FireWIN, BWXL35-60, VarioWIN	0	99999999999999999
105	045298	FIRE26 Boiler feed build-in parts for FireWIN classic, BioWIN XL exclusive pneumatic, VarioWIN	0	99999999999999999
110	045021	Clamping plate for screen for FireWIN, VarioWIN	0	99999999999999999
120	009929	Terminal bar MS 8-pin 8x8mm for VarioWIN,FireWIN, BioWIN XL 35-60	0	99999999999999999
130	031250	Lip seal, Ø=50 for FireWIN, VarioWIN	0	99999999999999999
140	044667	Blower motor 122151-12 for feed Conversion instructions for use with PMX 15-26 are enclosed! for BioWIN 10-26, PMX,BioWIN XL 35-6	0	99999999999999999
150	016596	Nut DIN 934 - M6 - A2 for VarioWIN, FireWIN, BioWIN10-26, BioWIN XL 35-60	0	99999999999999999
160	006821	Proximity switch, capacitive	0	99999999999999999
170	022551	Rivet 4 x 12 ST/GK/STD black, galvanised (ZHN) for VarioWIN, FireWIN	0	99999999999999999
180	016156	Rivet nut M8 for VarioWIN, FireWIN, BioWIN XL 35-60	0	99999999999999999
190	005107	Baffle plate 377 x 330 for FireWIN, VarioWIN	0	99999999999999999
200	007655	Knurled nut with through-hole thread M5 SW for VarioWIN, FireWIN,BioWIN10-26	0	99999999999999999
210	006875	Hose clip 40-60	0	99999999999999999
220	016756	Hexagon screw M5x10 DIN 933	0	99999999999999999
230	031545	Hexagon screw M5x12 DIN 7500 (not ilustrated)	0	99999999999999999
240	016461	Hexagon screw M8x80 DIN 933	0	99999999999999999
250	045027	Cover securing piece for FireWIN, VarioWIN	0	99999999999999999
260	045013	Feed clamping plate for FireWIN, VarioWIN, BioWIN XL 35-60	0	99999999999999999
270	045028	Cover clamping plate for FireWIN, VarioWIN	0	99999999999999999
280	009559	Rubber grommet DK 6-9-12-7	0	99999999999999999
290	018309	Disc 5 DIN134	0	99999999999999999
300	020540	U-Washer DIN 134 - M6 - galvanised for VarioWIN, FireWIN	0	99999999999999999
310	006720	Wago terminal block 261 1-9, 8-pce. Emergency door switch/probe switching for BioWIN, VarioWIN, FireWIN, BioWIN10-26, BioWIN XL 35	0	99999999999999999
320	009966	Wago terminal block 261; 11-pin orange extra-low voltage Extnd. for VarioWIN, FireWIN, BioWIN XL 35-60	0	99999999999999999
330	045011	Feed wall bracket for FireWIN, VarioWIN, BioWIN XL 35-60	0	99999999999999999
335	045258	FIRE25 Feed unit for FireWIN Premium and Exklusiv, VarioWIN Exklusiv, BioWIN XL 35-60	0	99999999999999999
340	045018	Feed strain relief for FireWIN, VarioWIN, BioWIN XL 35-60	0	99999999999999999
350	019836	Cylinder screw 2.9x16 (not illustrated)	0	99999999999999999
360	018139	Cylinder screw 4.2x13 DIN7981SP (not illustrated)	0	99999999999999999

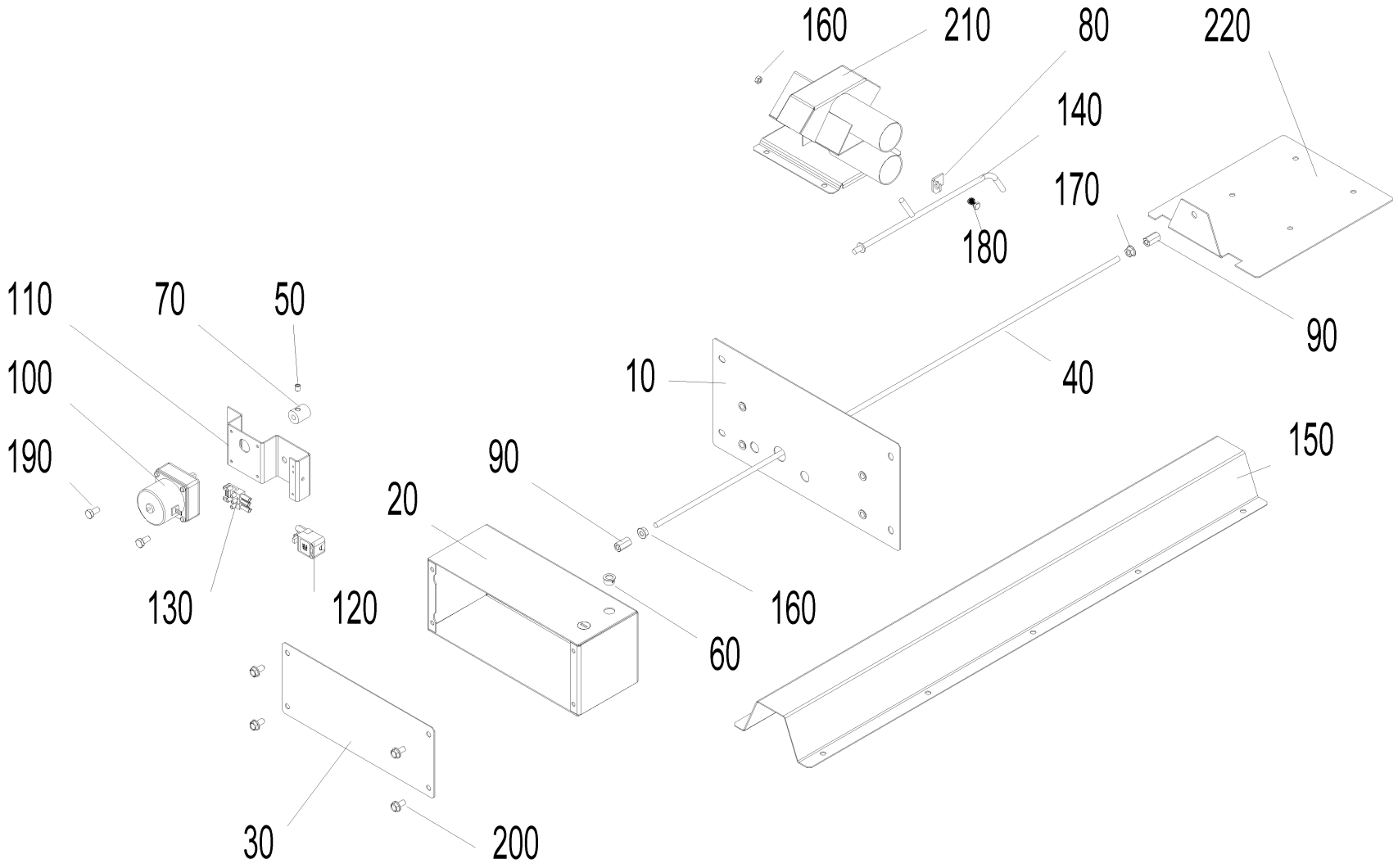
160
210
80
220
140
170
180
110
70
50
100
190
10
40
90
90
150
20
130
120
160
60
30
200

Item no.	Article no.	Description	Serialnumber from	Serialnumber to
10	048561	Storage room cover BIO024	0	99999999999999999
20	048558	Drive housing BIO024	0	99999999999999999
30	048560	Housing cover BIO024	0	99999999999999999
40	048553	Drive shaft M8 x 1000 mm	0	99999999999999999
50	033112	Setscrew M8x10 DIN916	0	99999999999999999
60	009542	Cable feed-through	0	99999999999999999
70	039762	Coupling	0	99999999999999999
80	039783	Store	0	99999999999999999
90	048554	M8 long nut	0	99999999999999999
100	012530	Grate shaking motor mounted replacement: 012517 for BioWIN10-26, FireWIN, VarioWIN	0	99999999999999999
110	039760	Motor complete	0	99999999999999999
120	041430	Mains connection socket 3-pin for MIRA,ETX,PMX,BioWIN10-26,LogWIN Premium 180-505,EasyWIN Premium 180,BioWIN XL 35-60, FireWIN	0	99999999999999999
130	009318	Plug ST18/3S sw wie for LogWIN Premium 180-505	0	99999999999999999
140	039774	Mixer	0	99999999999999999
150	048556	Drive shaft cover	0	99999999999999999
160	016594	Hexagon nut M6 DIN 934	0	99999999999999999
170	016553	Hexagon nut M8 with flange and gearing	0	99999999999999999
180	024759	Hexagon screw DIN 933 - M6x16 - 8.8 - galvanised for VarioWIN	0	99999999999999999
190	015134	Hexagon screw M8x16 DIN 933	0	99999999999999999
200	017882	Thread-rolling hexagon screw DIN 7500 - M8x16 TT - galvanised for VarioWIN, EasyWIN Klassik/Premium 180	0	99999999999999999
210	045304	Pellet feed probe for 3-way changeover unit	0	99999999999999999
220	048557	Wand holders	0	99999999999999999

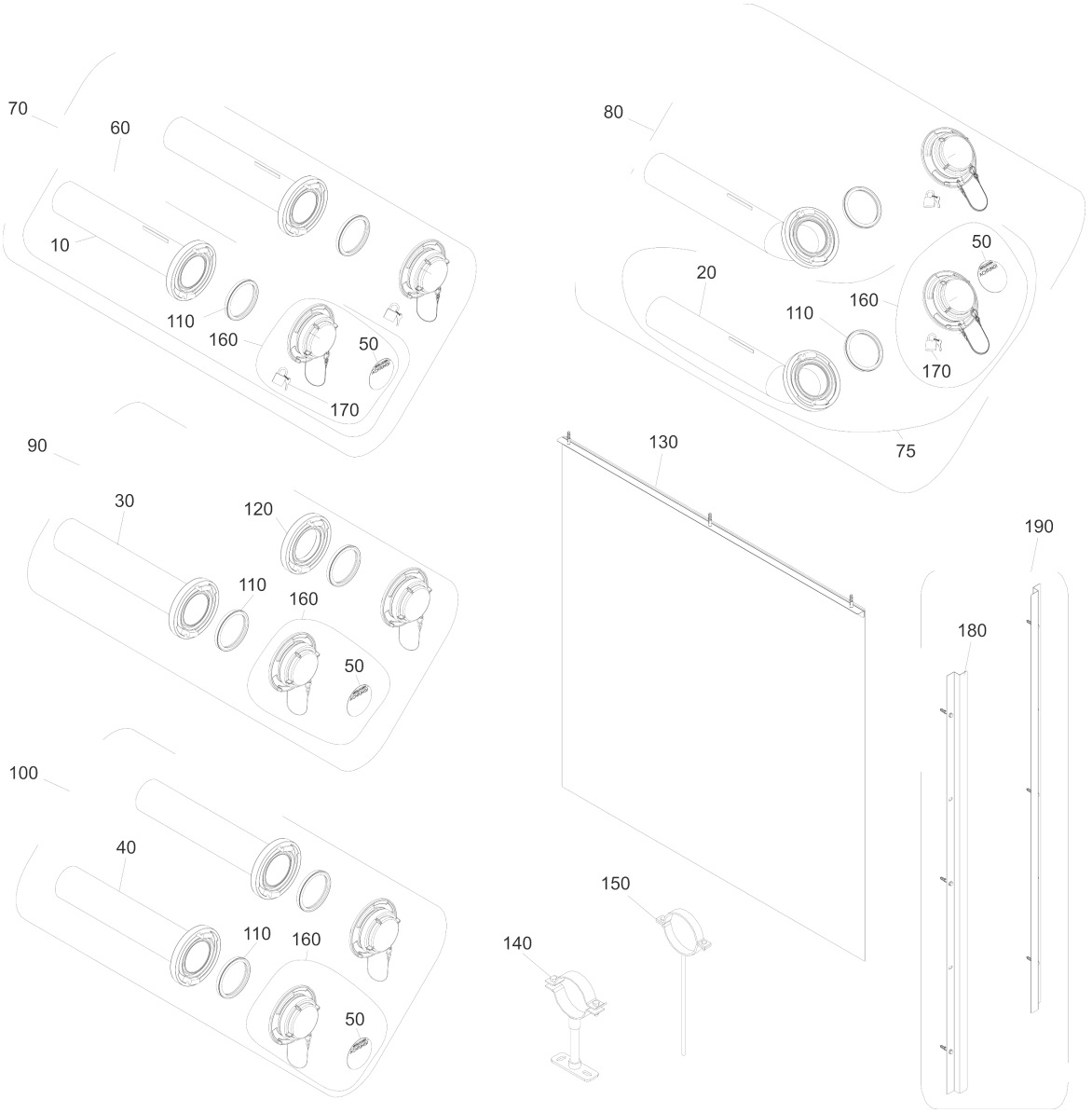
70
60
10
110
160
50
170
80
20
110
160
50
170
75
90
30
120
110
160
50
100
40
110
160
50
130
190
180
150
140

Item no.	Article no.	Description	Serialnumber from	Serialnumber to
10	051930	Connection pipe 700 mm with anti-twist device and earthing strap	0	99999999999999999
20	051931	Connection pipe 700 mm, 45° with anti-twist device and earthing strap	0	99999999999999999
30	003506	SBT 031 Connection pipe 500 mm with O-ring for sheet steel tank	0	99999999999999999
40	003507	GET 014 Connection pipe 500 mm for fabric tank	0	99999999999999999
50	003503	BIO 014, BIO 015, SBT 031, GET 014 Sticker for filling pipe	0	99999999999999999
60	505178	BIO0171 Storz A coupling solo, 0,7m pipe, blockable and ventilates blind cover	0	99999999999999999
70	505177	BIO 017 Filling pipe set	0	99999999999999999
75	505180	BIO0181 Filling coupling set 45° solo consisting of: Storz A couplings with blockable and ventilated blind covers, integrated 45	0	99999999999999999
80	505179	BIO018 Filling coupling set 45° consisting of: 2 Storz A couplings with blockable and ventilated blind covers, integrated 45° be	0	99999999999999999
90	505166	SBT 031 Filling pipe set for sheet steel tank	0	99999999999999999
100	505170	GET 014 Filling pipe set for fabric tank	0	99999999999999999
110	003907	BIO 014, BIO 015, SBT 031, GET 014 Seal ring	0	99999999999999999
120	044823	SBT 031 Storz A-coupling with O-ring (110 x 2)	0	99999999999999999
130	505114	PMX 017 Baffle plate incl. fastening material for storage room	0	99999999999999999
140	503333	GTW005 Solid pipe clamp for wall attachment Ø100	0	99999999999999999
150	000316	PMX 017,GTW0041 Pipe clamp Ø 100 mm No. 87193	0	99999999999999999
160	003361	BIO 014, BIO 015, SBT 031, GET 014 Ventilated cover with chain and lock	0	99999999999999999
170	003505	BIO 014, BIO 015 Lock + 2 keys for ventilated cover	0	99999999999999999
180	042065	PMX 016 Z-bracket (1x) for storage room door	0	99999999999999999
190	505113	PMX 016 Z-bracket (2 pieces of 2 m) for storage room door	0	99999999999999999
10000	505110	PMX013 Delivery and return air hose with flexible earth lead, NW 50 mm, roll with 25 m length	0	99999999999999999

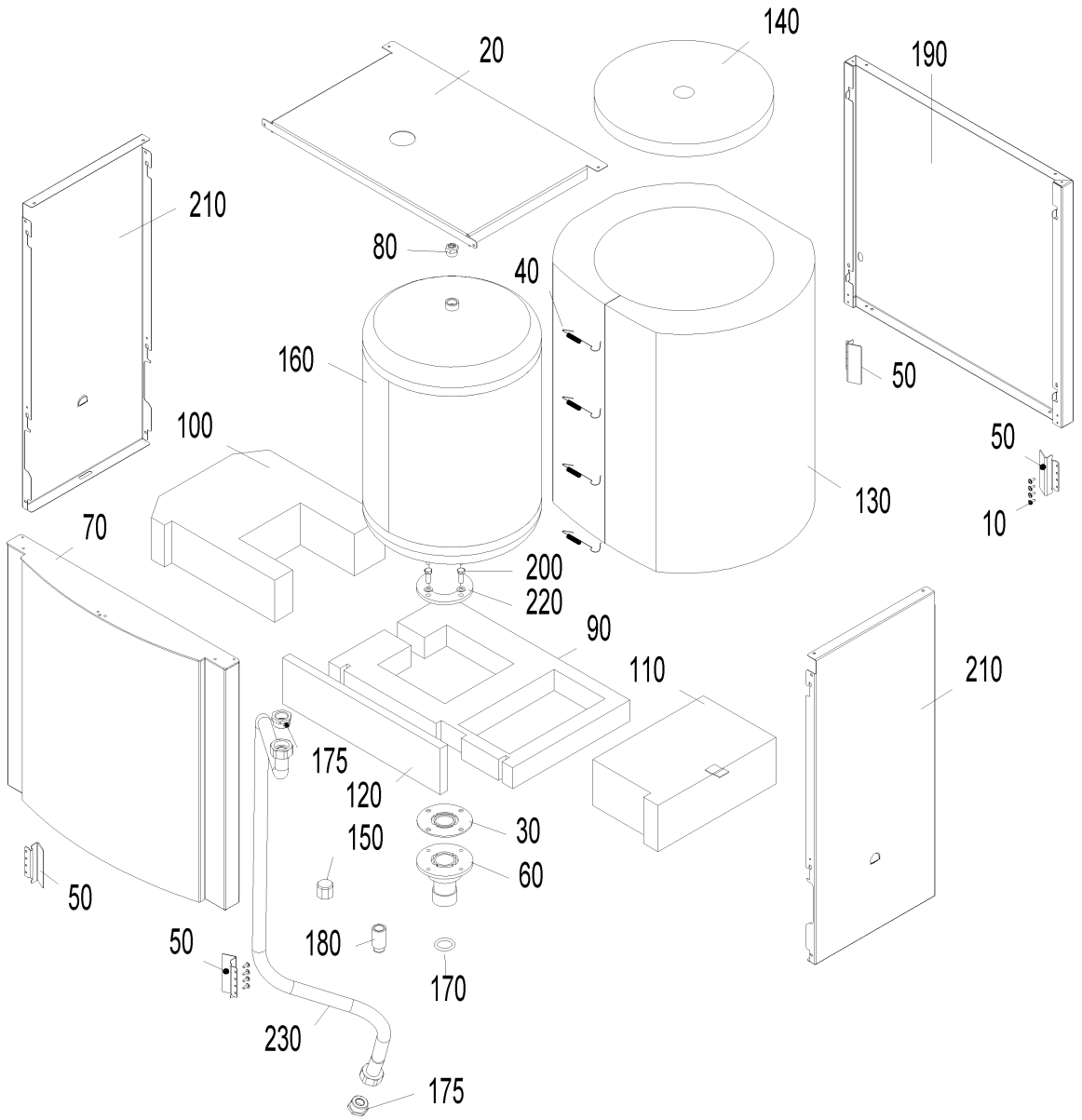
20
140
190
210
80
40
160
50
100
50
130
10
70
200
220
90
110
210
175
120
150
30
60
50
50
180
170
230
175

Item no.	Article no.	Description	Serialnumber from	Serialnumber to
10	018139	Cylinder screw 4.2x13 DIN7981SP (not illustrated)	0	99999999999999999
20	046409	de: Deckel verkehrsweiß 89/10198 besch. LAB	0	99999999999999999
30	007141	de: Dichtung Flansch LAB VW	0	99999999999999999
40	002444	Tension spring 9,8x8,7 DAx98x39IF 1.4310 WAX/LAX,FW WAX976	0	99999999999999999
50	045399	de: Fixierung Verkleidungsteile zu LAB	0	99999999999999999
60	046691	de: Flansch unten für LAB	0	99999999999999999
70	046405	de: Front kpl.verkehrsweiß besch. LAB	0	99999999999999999
80	004870	EKX901 Manually operated bleeder 1/2" with slotted screw for AccuWIN, AccuWIN Solar, VarioWIN, FireWIN	0	99999999999999999
90	011153	de: Isolierung oben 1 LAB	0	99999999999999999
100	011154	de: Isolierung oben 2 LAB	0	99999999999999999
110	011148	de: Isolierung oben 3 325x200x110 LAB	0	99999999999999999
120	011152	de: Isolierung oben 4 LAB	0	99999999999999999
130	011149	de: Isolierung Behälter 1480x570x80 LAB	0	99999999999999999
140	011151	de: Isolierung oben Behälter Durchmessr 350x30 LAB	0	99999999999999999
150	006165	Cap Nr. 301, 3/4" black	0	99999999999999999
160	046696	de: LAB geschweißt	0	99999999999999999
170	007143	de: O-Ring 29,51 x 5,33 aus EPDM LAB	0	99999999999999999
180	000854	de: Rohrverlängerung 1/2" x 40 mm lg. (LAB)	0	99999999999999999
190	046408	de: Rückwand beschichtet verkehrsweiß 89/10198 LAB	0	99999999999999999
200	017191	Hexagon screw M8x25 DIN 933	0	99999999999999999
210	046406	de: Seitenwand beschichtet verkehrsweiß 89/10198 LAB	0	99999999999999999
220	024767	Washer DIN 125 - M8 - galvanised, ISO 7089 for VarioWIN, BioWIN 10-26, BioWIN XL 35-60, EasyWIN Premium 180	0	99999999999999999
230	006314	de: Wellrohr - Edelstahl DN20 x 1370 mm mit zwei Uberwurfmuttern 1" montiert und Dichtungen	0	99999999999999999

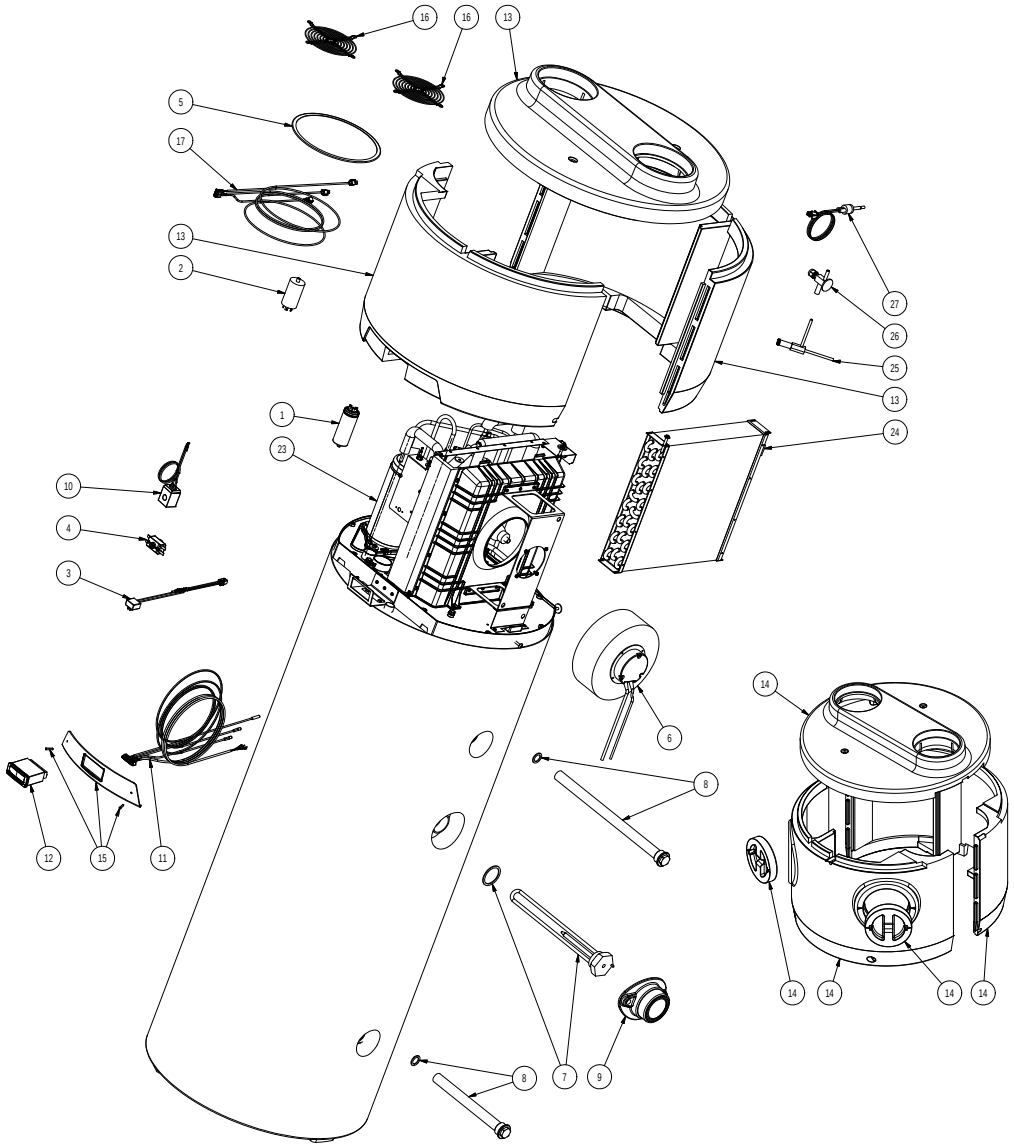
16
16
13
5
17
13
2
27
26
25
13
24
1
23
10
4
3
6
8
14
12
15
11
14
14
14
14
8
7
9

Item no.	Article no.	Description
1	R7006000021	Cond. Compr. WHP 15 MIC (versione L)
1	R7006000015	Cond. elettr. Marcia 35uF 425V (versione H)
2	R7006000207	Filtro EMI/RFI Cx0.47uF
3	R7006000208	Controllo Dual Speed vent. EC 1.9 kW (versione L)
3	R7006000209	Controllo Dual Speed vent. EC 2.9 kW (versione H)
4	R7006000219	Termostato WZA-I capillare = 1200 mm
5	R7021000006	Filtro antipolvere Ø240 mesh 500
6	R7036000079	Vent. EC XIANGMING FLH225
7	R7036000115	Resistenza corazzata boiler 1500 W
8	R7006000286	Anodo L 400
9	R7008000072	Calottina in plastica
10	R7006000187	Bobina Parker 9 W cablata
11	R7006000211	Sonde
12	R001000001	Controller (da programmare)
13	RV888000063	Cover nero
14	RV888000073	Cover fori post. nero
15	RV888000067	Frontalino ABS display + viti
16	R7021000005	Griglia per ventilatore Jason LP2217
17	R7006000212	Cablaggio
23	R7036000063	Compressore Hitachi WHP 01900BSV-H6AU (versione L)
23	R799106260	Compressore WHP02830BSV (versione H)
24	R7068000047	Evap. Cu-Al 25X21.65 fi9.52 45T (versione L)
24	R7068000046	Evap. Cu-Al 25X21.65 fi9.52 75T (versione H)
25	R7006000011	Solenoide Parker 360151
26	R7004000012	Valvola termostatica Danfoss TDN1 1.6 kW (versione L)
26	R7004000001	Valvola termostatica Parker 151529-003 (versione H)
27	R7006000146	Pressostato PS80-01

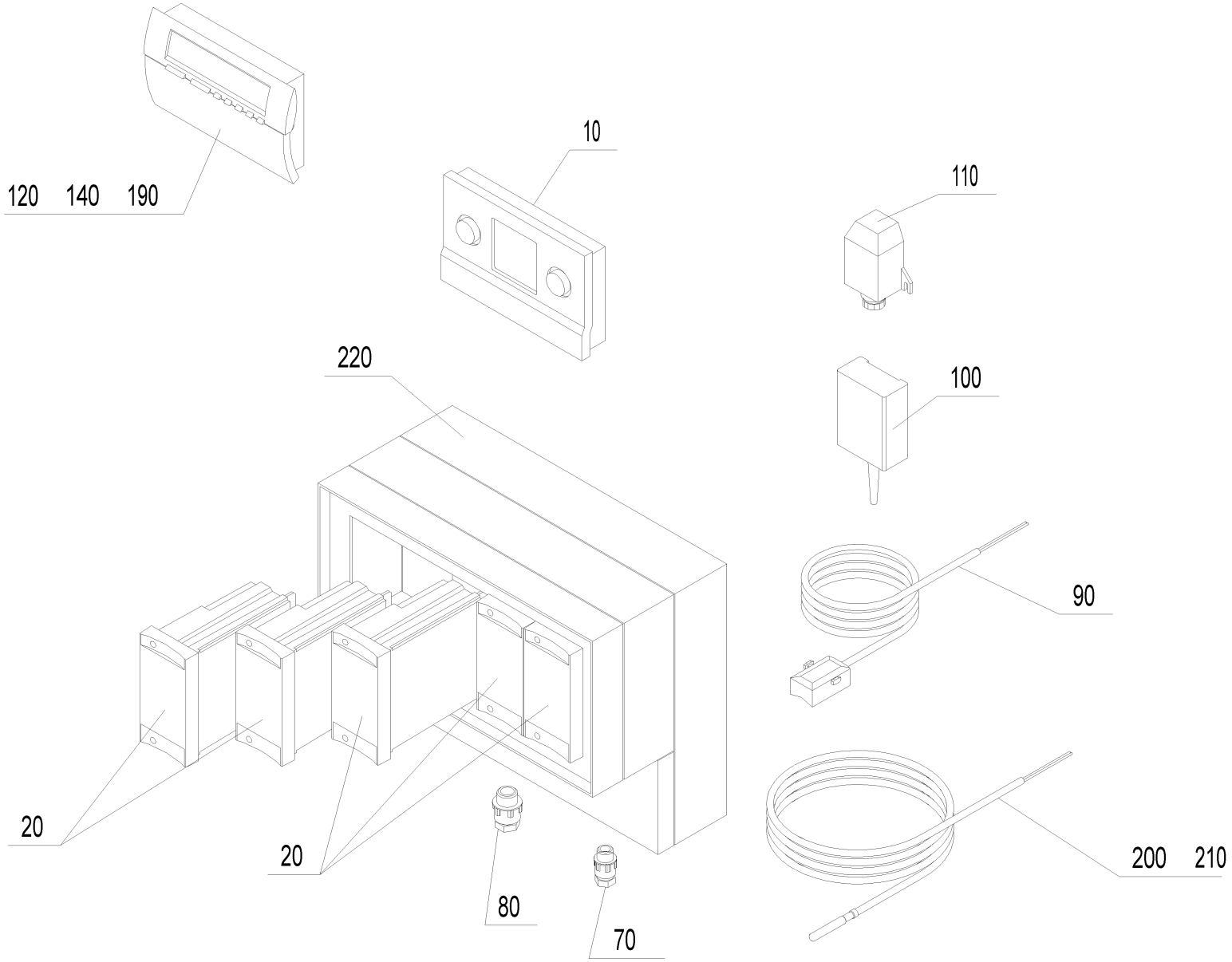
120 140 190
10
110
220
100
90
20
20
80
70
200 210

Item no.	Article no.	Description	Serialnumber from	Serialnumber to
10	009454	MES user control FB 5410	0	99999999999999999
20	009251	MES-Netzteilmodul VE	0	99999999999999999
20	009252	MES A-HKM UML C1	0	99999999999999999
20	009253	MES000 Dummy cover for MES-slot	0	99999999999999999
20	009262	MES-Solid fuel combination module WVF	0	99999999999999999
20	009266	MES A-HKM HSM	0	99999999999999999
20	009268	MES-A-HKM RT (BUUL RT / UULL RT C1)	0	99999999999999999
20	009270	MES A-SOLAR	0	99999999999999999
20	009450	MES-modul BUL C1	0	99999999999999999
20	009452	MES A-HKM BUM	0	99999999999999999
20	009460	MES A-HKM BBUL	0	99999999999999999
20	051541	Modification set BUML TTL to BUML TTL 2Z	0	99999999999999999
50	502002	FK-001 Pipe contact thermostat	0	99999999999999999
70	009286	Mount connections PG7	0	99999999999999999
80	001341	Mount connections PG9	0	99999999999999999
90	502188	MES008 Feed sensor	0	99999999999999999
100	009256	ZAF200 MES - external sensor	0	99999999999999999
110	000145	External sensor for gas (REG for MultiWIN, XenoWIN, GMX, GBX, XENTA)	0	99999999999999999
120	009264	de: REG-Aussentemperatur Regelung SR 5240	0	99999999999999999
140	009254	MES automatic mode FB5210	0	99999999999999999
190	009272	de: REG-Raumtemperatur Regelung RTR SR 5240 803672	0	99999999999999999
200	502186	MES009M Immersion sensor	0	99999999999999999
210	502185	MES009G Immersion sensor (DHW tank)	0	99999999999999999
220	502386	MES004 Wall-mount casing incl. power supply unit	0	99999999999999999

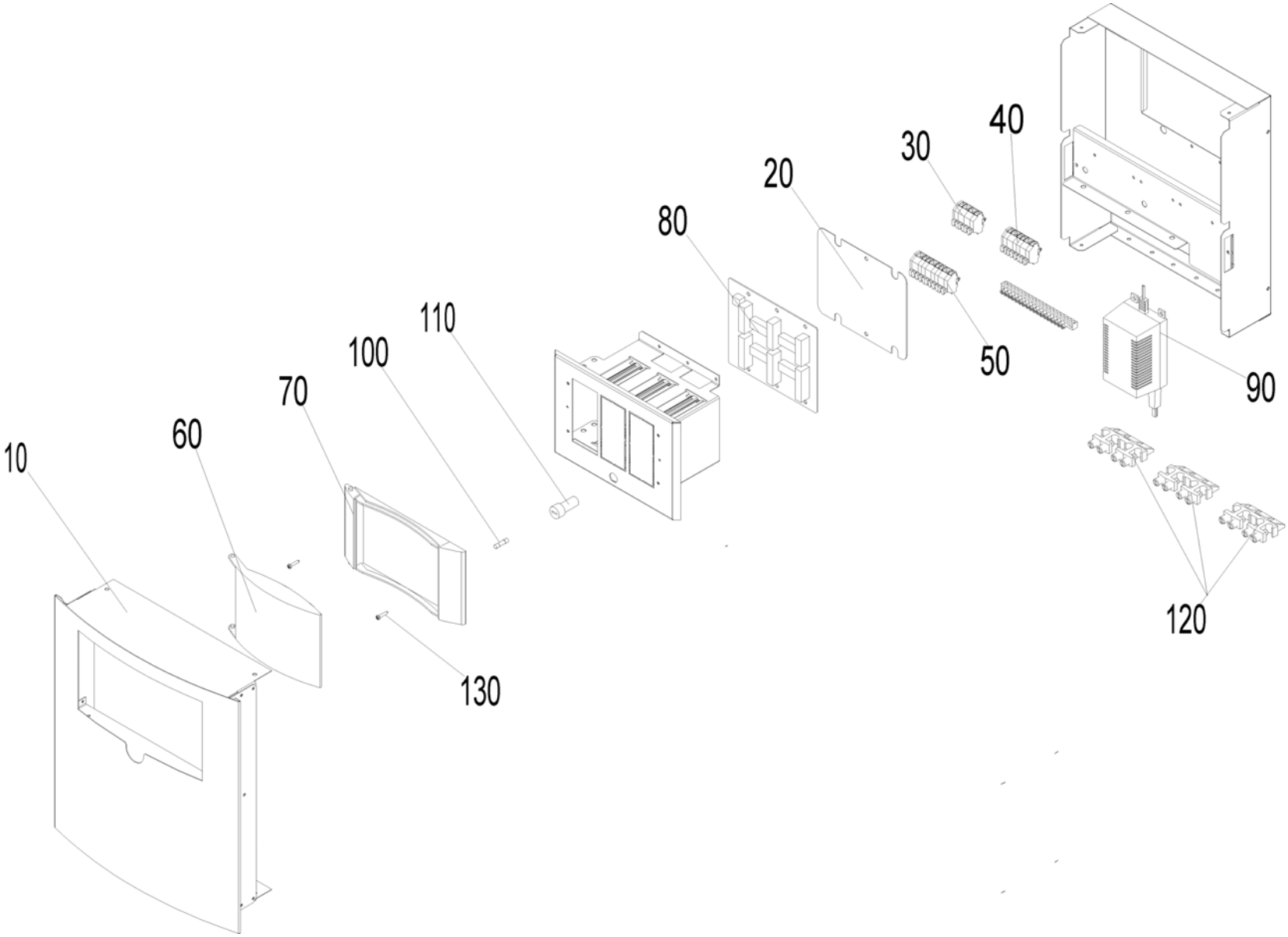
10
60
70
100
110
80
20
30
40
50
90
120
130

Item no.	Article no.	Description	Serialnumber from	Serialnumber to
10	043233	Cover wall housing MES	0	99999999999999999
20	002237	Plate made of fiber 150X125X1	0	99999999999999999
30	009951	Wago terminal block 261; 1-6	0	99999999999999999
40	009960	Wago terminal block 261; 8-pin 230V extnd. for VarioWIN, FireWIN, BioWIN10-26, BioWIN XL 35-60 (*not illustrated)	0	99999999999999999
50	009968	Wago terminal block 261; 13-pin orange extra-low voltage (no. 1-13), for VarioWIN, FireWIN, BioWIN 10-26, BioWIN XL 35-60 (*not il	0	99999999999999999
60	009448	Cover MES	0	99999999999999999
70	009446	Housing cover MES	0	99999999999999999
80	040928	Module connection ETX/SNX	0	99999999999999999
90	051645	Power supply unit 12V	0	99999999999999999
100	003228	6.3A fuse (not illustrated)	0	99999999999999999
110	003663	Fuse holder	0	99999999999999999
120	041914	Strain relief 4X, complete, assembled for ETX/SNX,PSX,GENIO/MultiWIN, SilvaWIN, BioWIN XL, BioWIN10-26, BioWIN XL 35-60	0	99999999999999999
130	019836	Cylinder screw 2.9x16 (not illustrated)	0	99999999999999999

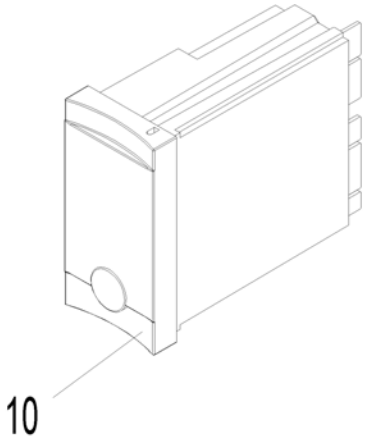
10

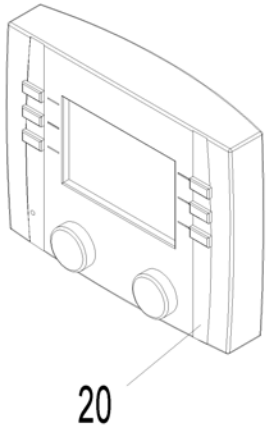
20

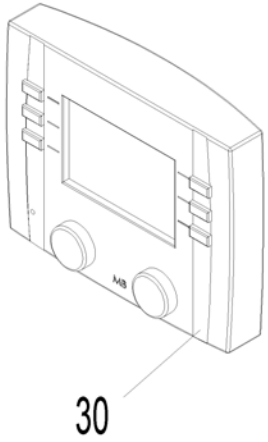
30

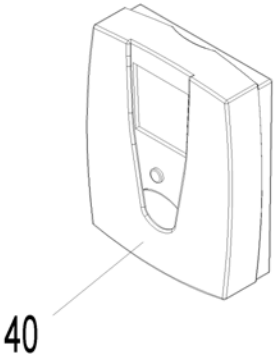
40

Item no.	Article no.	Description	Serialnumber from	Serialnumber to
10	009383	MES HKM UML PLUS	0	99999999999999999
10	009384	MES WVF PLUS FB	0	99999999999999999
10	009385	MES B-PLM PLUS	0	99999999999999999
20	009381	MES automatic mode BM6109	0	99999999999999999
30	009380	MB6130 MES PLUS Master control unit	0	99999999999999999
40	009382	MES Temperature controller FS6230	0	99999999999999999
50	502002	FK-001 Pipe contact thermostat	0	99999999999999999



10



20

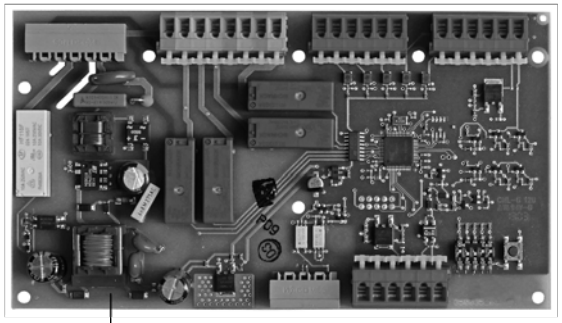

30

40 , 50

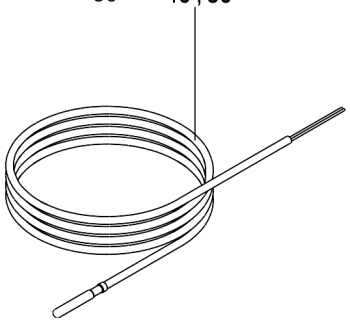

60 , 70

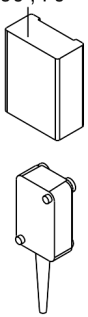

80

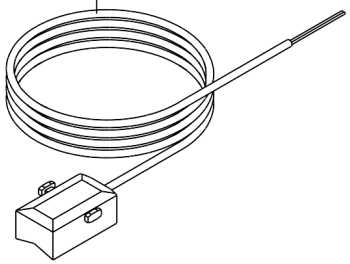

Item no.	Article no.	Description	Serialnumber from	Serialnumber to
10	009273	de: Analogregelung RAM 786	0	99999999999999999
20	009379	de: Digitalregelung RAM850	0	99999999999999999
30	009767	BUML TTL 2Z interface	0	99999999999999999
40	502186	MES009M Immersion sensor	0	99999999999999999
50	502185	MES009G Immersion sensor (DHW tank)	0	99999999999999999
60	009256	ZAF200 MES - external sensor	0	99999999999999999
70	000145	External sensor for gas (REG for MultiWIN, XenoWIN, GMX, GBX, XENTA)	0	99999999999999999
80	502188	MES008 Feed sensor	0	99999999999999999



10



20

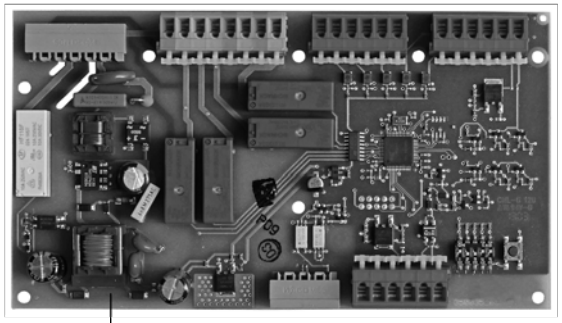

30

40 , 50

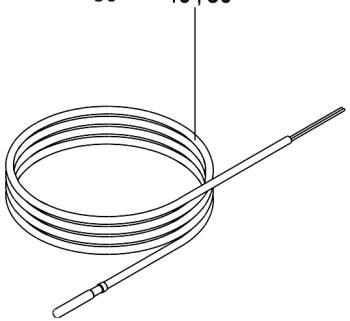

60 , 70

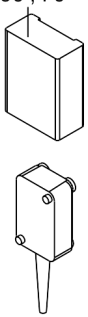

80

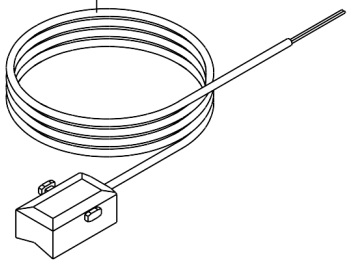

Item no.	Article no.	Description	Serialnumber from	Serialnumber to
10	009273	de: Analogregelung RAM 786	0	99999999999999999
20	009379	de: Digitalregelung RAM850	0	99999999999999999
30	009767	BUML TTL 2Z interface	0	99999999999999999
40	502186	MES009M Immersion sensor	0	99999999999999999
50	502185	MES009G Immersion sensor (DHW tank)	0	99999999999999999
60	009256	ZAF200 MES - external sensor	0	99999999999999999
70	000145	External sensor for gas (REG for MultiWIN, XenoWIN, GMX, GBX, XENTA)	0	99999999999999999
80	502188	MES008 Feed sensor	0	99999999999999999



10



20

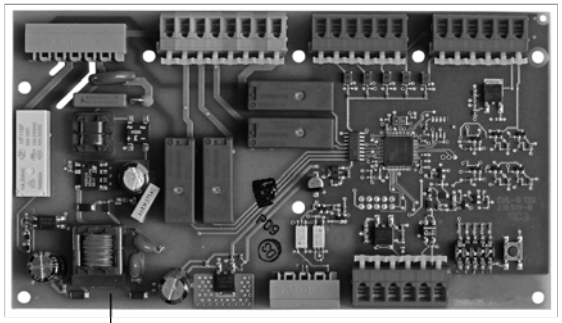

30

40 , 50

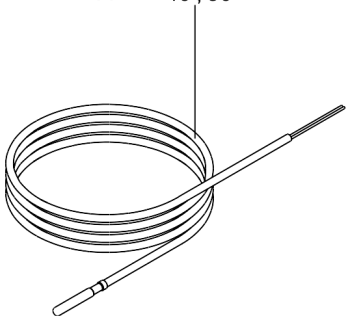

60 , 70

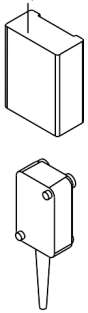

80

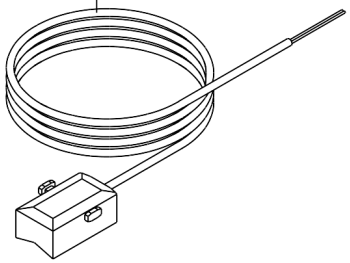

Item no.	Article no.	Description	Serialnumber from	Serialnumber to
10	009273	de: Analogregelung RAM 786	0	99999999999999999
20	009379	de: Digitalregelung RAM850	0	99999999999999999
30	009767	BUML TTL 2Z interface	0	99999999999999999
40	502186	MES009M Immersion sensor	0	99999999999999999
50	502185	MES009G Immersion sensor (DHW tank)	0	99999999999999999
60	009256	ZAF200 MES - external sensor	0	99999999999999999
70	000145	External sensor for gas (REG for MultiWIN, XenoWIN, GMX, GBX, XENTA)	0	99999999999999999
80	502188	MES008 Feed sensor	0	99999999999999999



10



20

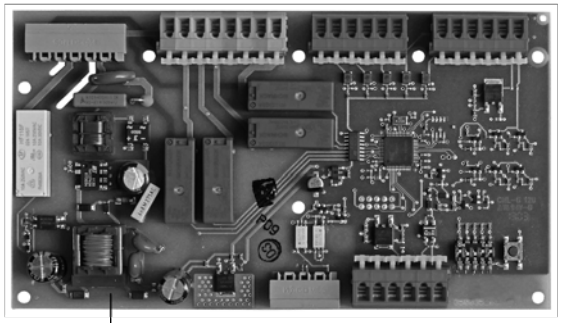

30

40 , 50

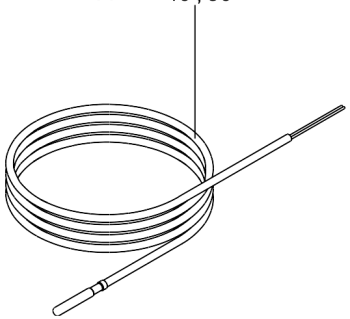

60 , 70

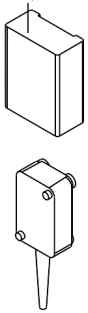

80

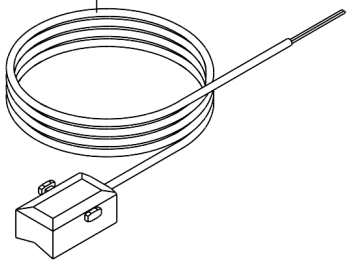

Item no.	Article no.	Description	Serialnumber from	Serialnumber to
10	009273	de: Analogregelung RAM 786	0	99999999999999999
20	009379	de: Digitalregelung RAM850	0	99999999999999999
30	009767	BUML TTL 2Z interface	0	99999999999999999
40	502186	MES009M Immersion sensor	0	99999999999999999
50	502185	MES009G Immersion sensor (DHW tank)	0	99999999999999999
60	009256	ZAF200 MES - external sensor	0	99999999999999999
70	000145	External sensor for gas (REG for MultiWIN, XenoWIN, GMX, GBX, XENTA)	0	99999999999999999
80	502188	MES008 Feed sensor	0	99999999999999999

Il presente Listino sostituisce i precedenti ed annulla tutti i dati in essi contenuti. La sua validità si estende fino ad emissione della versione successiva.
Teco Service S.r.l. si riserva il diritto di apportare ai suoi prodotti modifiche senza obbligo di preavviso. Anche le caratteristiche ed ogni altra indicazione fornita da Teco Service S.r.l., possono essere modificate. Pertanto, tali dati non sono da ritenersi vincolanti e viene esclusa ogni responsabilità di Teco Service S.r.l. nell'eventualità in cui si verifichino variazioni.
Teco Service S.r.l. declina ogni responsabilità per errori tipografici e di redazione.

Sede legale e operativa
Via C. Maffei, 3
38089 - Darzo (TN)
Tel. +39 0465 684 135
Fax +39 0236 028 582
info@tecoservice.it
www.tecoservice.it

TECO Service Srl

SEDE LEGALE
E OPERATIVA
Via C.Maffei, 3
38089 Darzo (TN)
Tel. 0465 684135
Fax 0236 028582
info@tecoservice.it

www.tecoservice.it


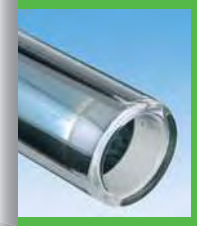








LPT-013-REV.01